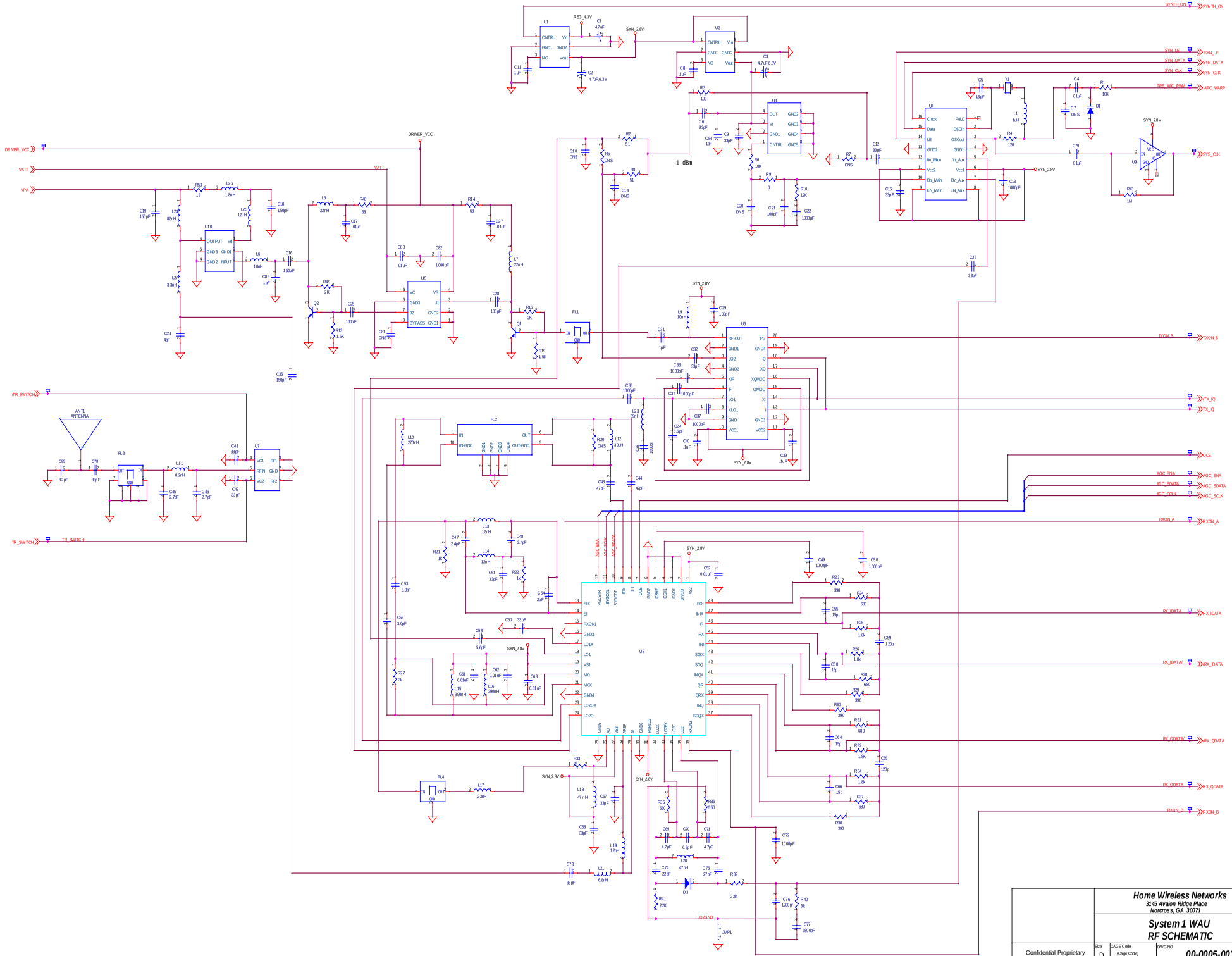

	Home Wireless Networks 3145 Avalon Ridge Place Norcross, GA 30071			
	System 1 WAU **RF SCHEMATIC**			
Confidential Proprietary	Size D	CAGE Code (Cage Code)	DWG NO 00-0005-003	Rev A
Thursday, November 19, 1998	Scale		Sheet 1 of 4	