## APPENDIX C: MANUAL

Please see the following pages.

# Operating Instructions

## VEGAPULS 62

## 4 ... 20 mA/HART

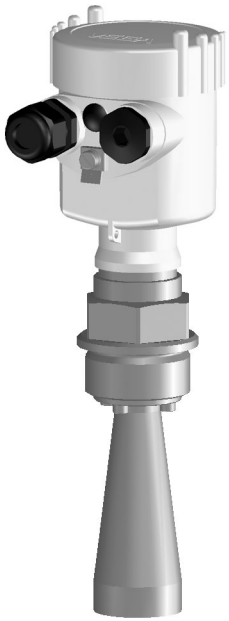

# Contents


## 1 About this document

1.1 Function . . . . . 4
1.2 Target group . . . . . 4
1.3 Symbolism used. . . . . 4

## 2 For your safety

2.1 Authorised personnel . . . . . 6
2.2 Appropriate use . . . . . 6
2.3 Warning about misuse . . . . . 6
2.4 General safety instructions . . . . . 6
2.5 CE conformity . . . . . 7
2.6 Compatibility acc. to NAMUR NE 53 . . . . . 7
2.7 FCC conformity (only for USA/Canada) . . . 8
2.8 Safety information for Ex areas . . . . . 8
2.9 Environmental instructions. . . . . 8

## 3 Product description

3.1 Configuration . . . . . 9
3.2 Principle of operation . . . . . 10
3.3 Adjustment. . . . . 11
3.4 Storage and transport . . . . . 11

## 4 Mounting

4.1 General instructions . . . . . 13
4.2 Mounting preparations, horn antenna. . . . . 14
4.3 Mounting preparations, parabolic antenna . 15
4.4 Mounting information . . . . . 16
4.5 Preparing the connection . . . . . 24
4.6 Connection procedure . . . . . 25
4.7 Wiring plans, single chamber housing . . . . 26
4.8 Wiring plans, double chamber housing . . . 28
4.9 Wiring plans, double chamber housing Exd 30

## 5 Setup with the indicating and adjustment module PLICSCOM

5.1 Short description . . . . . 33


28435-EN-050211

5.2 Installing the indicating and adjustment module PLICSCOM . . . . . 33
5.3 Adjustment system . . . . . 35
5.4 Setup procedure . . . . . 36
5.5 Menu schematic . . . . . 41

**6 Setup with PACTware™**

6.1 Connecting the PC . . . . . 44
6.2 Parameter adjustment with PACTware™ . . 45

**7 Maintenance and fault rectification**

7.1 Maintenance . . . . . 47
7.2 Fault rectification . . . . . 47
7.3 Exchanging the oscillator . . . . . 49
7.4 Instrument repair . . . . . 51

**8 Dismounting**

8.1 Dismounting procedure . . . . . 53
8.2 Disposal . . . . . 53

**9 Supplement**

9.1 Technical data . . . . . 54
9.2 Dimensions . . . . . 61
9.3 Certificates. . . . . 68

# 1 About this document

## 1.1 Function

This operating instructions manual has all the information you need for quick setup and safe operation of VEGAPULS 62. Please read this manual before you start setup.

## 1.2 Target group

This operating instructions manual is directed to trained personnel. The contents of this manual should be made available to these personnel and put into practice by them.

## 1.3 Symbolism used

**Information, tip, note**
This symbol indicates helpful additional information.

**Caution, warning, danger**
This symbol informs you of a dangerous situation that could occur. Ignoring this cautionary note can impair the person and/or the instrument.

**Ex applications**
This symbol indicates special instructions for Ex applications.

● **List**
The dot set in front indicates a list with no implied sequence.

→ **Action**
This arrow indicates a single action.

28435-EN-050211

1 **Sequence**
Numbers set in front indicate successive steps in a procedure.

# 2 For your safety

## 2.1 Authorised personnel

All operations described in this operating instructions manual must be carried out only by trained and specialist personnel authorised by the operator. For safety and warranty reasons, any internal work on the instruments must be carried out only by personnel authorised by the manufacturer.

## 2.2 Appropriate use

VEGAPULS 62 is a sensor for continuous level measurement.

## 2.3 Warning about misuse

Inappropriate or incorrect use of the instrument can give rise to application-specific hazards, e.g. vessel overfill or damage to system components through incorrect mounting or adjustment.

## 2.4 General safety instructions

VEGAPULS 62 is a high-tech instrument requiring the strict observance of standard regulations and guidelines. The emitting frequencies of all VEGAPULS sensors are in the C or K-band range (depending on the instrument version). The low emitted powers are far below the internationally permitted limit values, in case of correct use, no health problems are expected. There are no restrictions in using the instrument also outside metallic, closed vessels. The user must take note of the safety instructions in this operating instructions manual, the country-specific installation standards (e.g. the VDE regulations in Germany) as well as all prevailing safety regulations and accident prevention rules.

## 2.5 CE conformity

VEGAPULS 62 is in CE conformity with EMC (89/336/EWG), R & TTE directive (1999/5/EC), meets the Namur recommendation NE 21 and is in CE conformity with NSR (73/23/EWG).

Conformity has been judged acc. to the following standards:

- EMC:
  - Emission EN 61326: 1997 (class B)
  - Susceptibility EN 61326: 1997/A1: 1998
- R & TTE directive: I-ETS 300-440 Expert opinion No. 0043052-02/SEE, Notified Body No. 0499
- NSR: EN 61010-1: 2001.

## 2.6 Compatibility acc. to NAMUR NE 53

VEGAPULS 62 meets NAMUR recommendation NE 53. VEGA instruments are generally upward and downward compatible:

- sensor software of DTM VEGAPULS 62 HART, PA or FF
- DTM VEGAPULS 62 for adjustment software PACTware™
- adjustment module PLICSCOM for sensor software

The parameter adjustment of the basic sensor functions is independent of the software version. The available functions depend on the appropriate software version of the single components.

The software version of VEGAPULS 62 can be determined as follows:

- via PACTware™
- on the type label of the electronics
- via the adjustment module PLICSCOM

On our website www.vega.com you will find all software histories. Use the possibility and get registered for update information via e-mail.

## 2.7 FCC conformity (only for USA/Canada)

VEGAPULS with all antenna versions are FCC approved.

Modifications must be expressively agreed by VEGA, otherwise the operating licence acc. to FCC will expire.

VEGAPULS 62 is in conformity with part 15 of the FCC regulations. Note the respective regulations for operation:

- The instrument must not cause any interfering emissions
- The instrument must be insensitive to interfering emissions, also to such causing unwanted operating conditions.

## 2.8 Safety information for Ex areas

Please note the Ex-specific safety information for installation and operation in Ex areas. These safety instructions are part of the operating instructions manual and come with the Ex-approved instruments.

## 2.9 Environmental instructions

Protection of the environment is one of our most important duties. That is why we have introduced an environment management system with the goal of continuously improving company environmental protection. The environment management system is certified acc. to DIN EN ISO 14001.

Please help us fulfil this obligation by observing the environmental instructions in this manual:

- Chapter "Storage and transport"
- Chapter "Disposal"

# 3 Product description

## 3.1 Configuration

**Scope of delivery**

The scope of delivery encompasses:

- VEGAPULS 62 radar sensor
- documentation
  - this operating instructions manual
  - Ex-specific safety instructions (with Ex versions) and, if necessary, further certificates

**Components**

VEGAPULS 62 consists of the following components:

- horn or parabolic antenna
- process fitting (depending on the version flange or thread)
- optionally available with purging air connection, reflux valve
- housing with electronics
- housing cover, optionally available with indicating/ adjustment module PLICSCOM

The components are available in different versions.

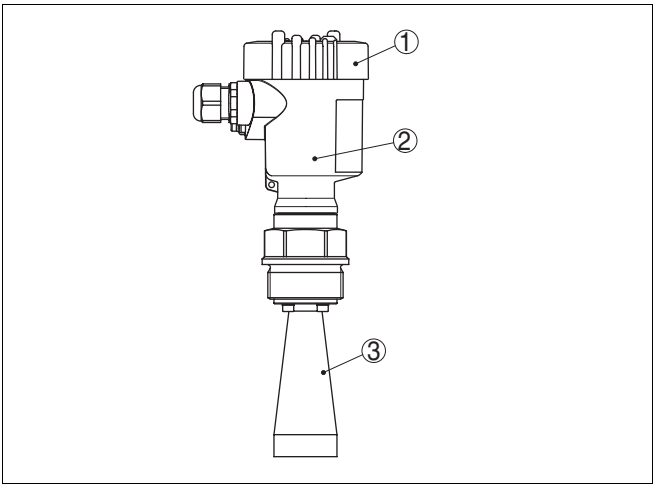


*Fig. 1: VEGAPULS 62, threaded version with plastic housing*

*1 Housing cover with integrated PLICSCOM (optional)*
*2 Housing with electronics*
*3 Process fitting with horn antenna*

## 3.2 Principle of operation

**Area of application**

VEGAPULS 62 is a radar sensor in K-band technology (emitting frequency approx. 26 GHz) for continuous level measurement.

A version of VEGAPULS 62 is available for the respective application:

- The version with thread and horn antenna with ø 40 mm (1.6 in) is particularly suitable for small tanks and process vessels for measurement of virtually all products.
- The version with flange and horn antenna with ø 48 … 95 mm (ø 1.9 … 3.7 in) is particularly suitable for storage tanks and process vessels, for measurement of solvents, hydrocarbons and fuels under most difficult process conditions.
- The version with parabolic antenna is particularly suitable for precise measurement of products with small dielectric value.

28435-EN-050211

**Physical principle**

The antenna of the radar sensor emits short radar pulses with a duration of approx. 1 ns. These pulses are reflected by the product and received by the antenna as echoes. The running time of the radar pulses from emission to reception is proportional to the distance and hence to the level. The determined level is converted into an appropriate output signal and outputted as measured value.

**Power supply**

Two-wire electronics 4 ... 20 mA/HART for power supply and measured value transmission on the same cable.

The power supply range can differ depending on the instrument version. The exact range is stated in the Technical data in the Supplement.

## 3.3 Adjustment

VEGAPULS 62 can be adjusted with three different adjustment media:

- the indicating and adjustment module PLICSCOM
- an adjustment software acc. to FDT/DTM standard, e.g. PACTware™ and PC
- a HART handheld

The entered parameters are generally saved in VEGA-PULS 62, optionally also in PLICSCOM or in PACTware™.

## 3.4 Storage and transport

**Packaging**

Your instrument was protected by packaging during transport. Its capacity to handle normal loads during transport is assured by a test acc. to EN 24180.

The packaging of standard instruments consists of environment-friendly, recyclable cardboard. For special versions PE foam or PE foil can be also used. Dispose of the packaging material via specialised recycling companies.

**Storage and transport temperature**

- Storage and transport temperature see Supplement, Technical data, Ambient conditions
- Relative humidity 20 ... 85 %

# 4 Mounting

## 4.1 General instructions

**Installation position**

Select an installation position you can easily reach for mounting and connecting as well as later retrofitting of an indicating and adjustment module PLICSCOM. The housing can be rotated by 330° without the use of any tools. You can also install the indicating and adjustment module PLICSCOM in four different positions (each displaced by 90°).

**Moisture**

Use the recommended cable (see chapter *"Connecting to power supply"*) and tighten the cable entry.

You can give your VEGAPULS 62 additional protection against moisture penetration by leading the connection cable downward in front of the cable entry. Rain and condensation water can thus drain off. This applies mainly to mounting outdoors, in areas where moisture is expected (e.g. by cleaning processes) or on cooled or heated vessels.

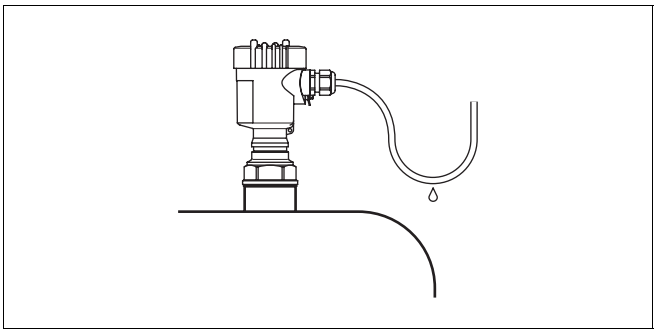

*Fig. 2: Measures against moisture penetration*

**Measuring range**

The reference plane for the measuring range is the lower edge of the flange or the seal surface of the thread.

**Information:**
If the product reaches the antenna, buildup can form on it over a period of time and later cause measurement errors.

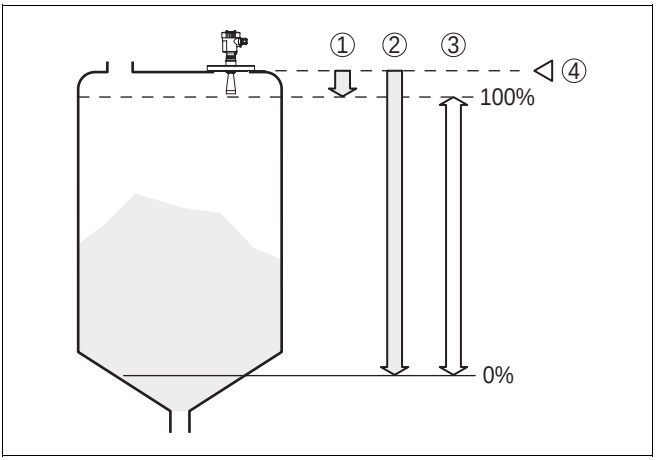


*Fig. 3: Measuring range (operating range) and max. measuring distance*

*1 full*
*2 empty (max. measuring distance)*
*3 Measuring range*

**Pressure**

The process fitting must be sealed with gauge or low pressure in the vessel. Check before use, if the seal material is resistant against the measured product. The max. permissible pressure is stated in the Technical data in the Supplement or on the type label of the sensor.

## 4.2 Mounting preparations, horn antenna

**Information:**
This information applies only to special versions!

VEGAPULS 62 is available in versions where the **antenna has a bigger diameter** than the process fitting (thread/flange). Therefore the antenna must be dismounted on the process fitting before mounting. Proceed as follows:

1 Loosen the hexagon screws on the antenna socket (1) with an Allan key (size 3)

2 Remove the antenna (2)

28435-EN-050211

3 Insert the antenna from below into the vessel socket and secure it against falling off

4 Retighten the antenna with hexagon screws (1) to the antenna socket; torque max. 10 Nm (7.5 lbf ft)

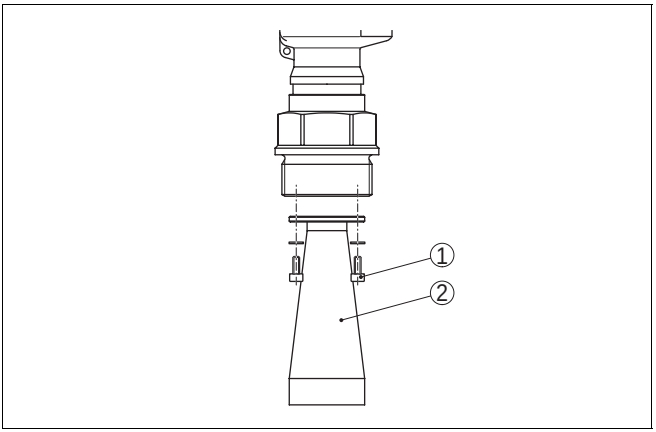


*Fig. 4: Dismounting of the horn antenna*

*1 Hexagon screws on the antenna socket*
*2 Antenna*

## 4.3 Mounting preparations, parabolic antenna

**Information:**
This information applies only to special versions!

VEGAPULS 62 is available in versions where the **antenna has a bigger diameter** than the process fitting (thread/flange). Before starting to mount, the antenna must be dismounted on the flange. Proceed as follows:

1 Clamp VEGAPULS 62 with the flange, e.g. in a bench vice

2 Hold the connection piece (3) with a wrench SW 22 on the flattenings

3 Unscrew the locknut (2) with SW 36 against the antenna

4 Unscrew the compression nut (1) with a wrench SW 41 against the antenna

5 Remove the parabolic antenna (4) axially

6 Mount sensor flange to the adapter flange and clamp it

7 Check if there is a O-ring seal on the adapter and if it is not damaged. If necessary, replace it: Viton, article no. 2.28248, Kalrez 6375 article no. 2.27351.

8 Remount the parabolic antenna (4)

9 Tighten compression nut (3) with SW 41, torque max. 50 Nm.

10 Tighten locknut (2) with SW 36, torque max. 40 Nm.

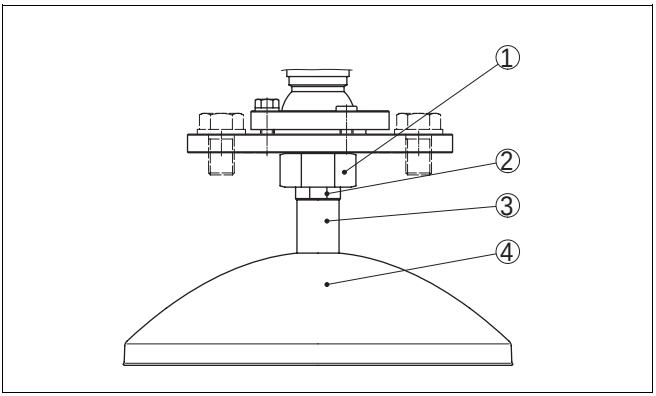


*Fig. 5: Dismounting, parabolic antenna*

*1 Compression nut*
*2 Locknut*
*3 Connection piece*
*4 Parabolic antenna*

## 4.4 Mounting information

**Horn and parabolic antenna**

The illustrations on the mounting instructions show a VEGAPULS 62 with horn antenna. The mounting instructions also apply to VEGAPULS 62 with parabolic antenna.

**Installation location**

When mounting VEGAPULS 62, keep a distance of at least 200 mm (7.9 in) to the vessel wall. If the sensor is installed in the center of concave or arched vessel tops, multiple echoes can arise. These can, however, be faded out by an appropriate adjustment (see Setup).

If this distance cannot be maintained, a false echo storage should be carried out during setup. This applies particularly if buildup on the vessel wall is expected. In this case, we recommend repeating the false echo storage later on with existing buildup.

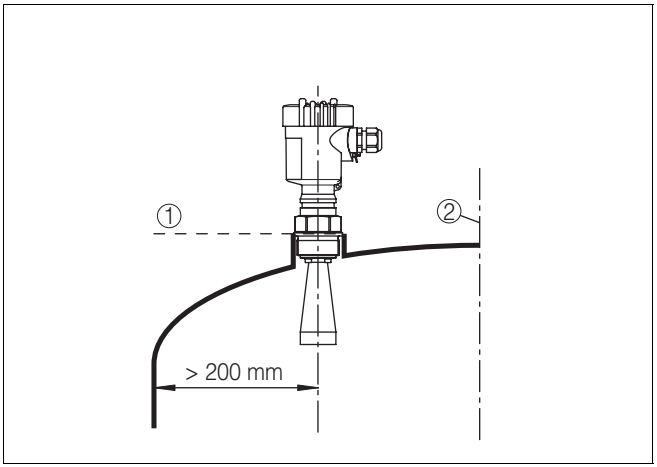


*Fig. 6: Mounting on arched vessel tops*

*1 Reference plane*
*2 Vessel center or symmetry axis*

In vessels with conical bottom it can be advantageous to mount the sensor in the center of the vessel, as measurement is then possible down to the lowest points of the vessel bottom.

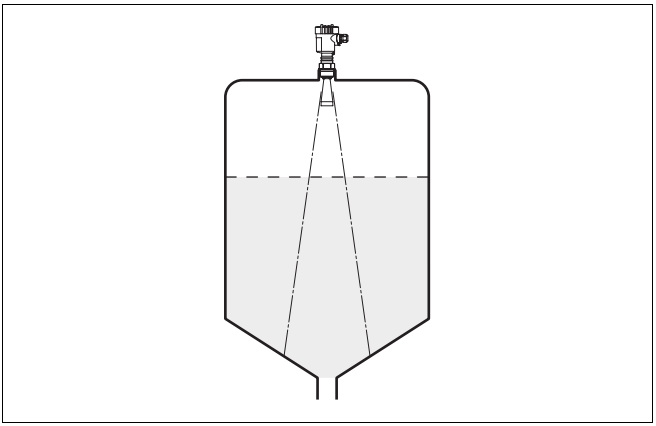

*Fig. 7: Vessel with conical bottom*

**Inflowing material**

Do not mount the instruments in or above the filling stream. Make sure that you detect the product surface and not the inflowing product.

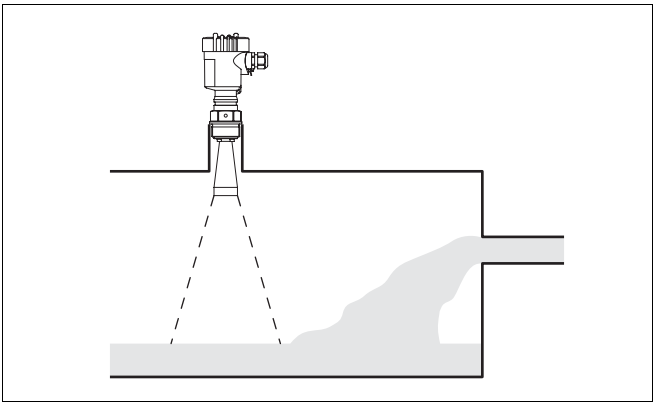

*Fig. 8: Inflowing liquid*

**Socket**

Preferably socket pieces should be dimensioned such that the antenna end protrudes at least 10 mm (0.4 in) out of the socket.

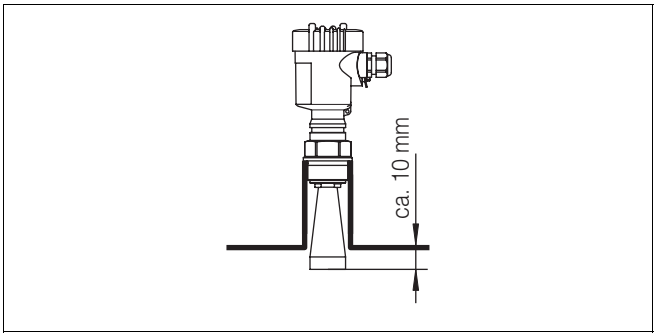


*Fig. 9: Recommended socket mounting*

If the reflective properties of the medium are good, you can mount VEGAPULS 62 on socket pieces higher than the antenna length. You will find recommended values of the socket heights in the following illustration. The socket end should be smooth and burr-free, if possible also rounded. Carry out a false echo storage afterwards.

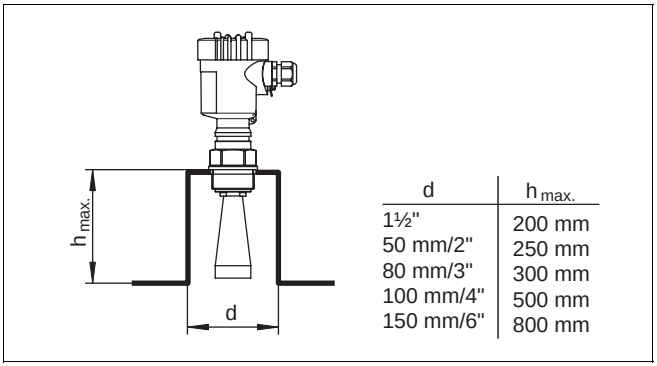


| d | h max. |
|---|---|
| 1½" | 200 mm |
| 50 mm/2" | 250 mm |
| 80 mm/3" | 300 mm |
| 100 mm/4" | 500 mm |
| 150 mm/6" | 800 mm |

*Fig. 10: Deviating socket dimensions*

**Sensor orientation**

In liquids, direct the sensor as close as vertical to the product surface to achieve an optimum measurement.

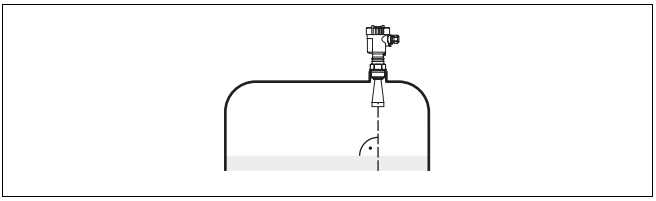

*Fig. 11: Orientation in liquids*

**Vessel installations**

The radar sensor should be installed at a location where no installations cross the radar signals.

Vessel installations such as, for example, ladders, limit switches, heating spirals, struts, etc. can cause false echoes superimposed on the useful echo. Make sure when planning your measuring location that the radar signals have "free access" to the measured product.

In case of existing vessel installations, a false echo storage should be carried out during setup.

If large vessel installations such as struts or supports cause false echoes, these can be attenuated through supplementary measures. Small, inclined sheet metal baffles above the installations scatter the radar signals and avoid a direct false echo reflection.

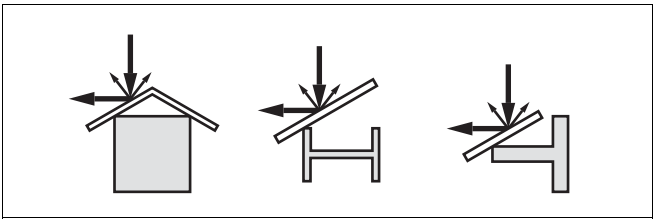

*Fig. 12: Cover smooth profiles with deflectors*

**Agitators**

In case of agitators in the vessel, a false echo storage should be carried out with the agitators to be in motion. This ensures that the false reflections of the agitators are saved in different positions.

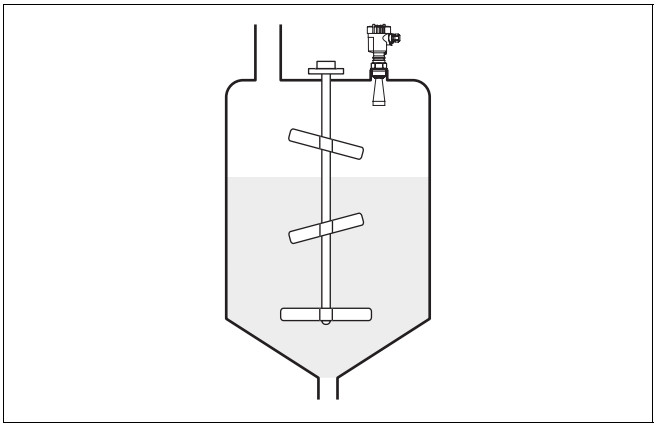

*Fig. 13: Agitators*

**Foam generation**

Through the action of filling, stirring and other processes in the vessel, dense foams can be generated on the product surface which damp the emitted signal considerably.

If foams can cause measurement errors, biggest possible radar antennas and low frequency radar sensors, e.g. VEGAPULS 65/66 (C-band) should be used.

VEGAFLEX sensors with guided microwaves are not influenced by foam generation and are particularly suitable for such applications.

**Measurement in the standpipe (surge or bypass tube)**

By the use of a standpipe, influences of vessel installations and turbulence can be excluded. Under these requirements, the measurement of products with low dielectric values (from DK value 1.6) is possible.

Surge or bypass tubes must extend all the way down to the requested min. level, as measurement is only possible within the tube.

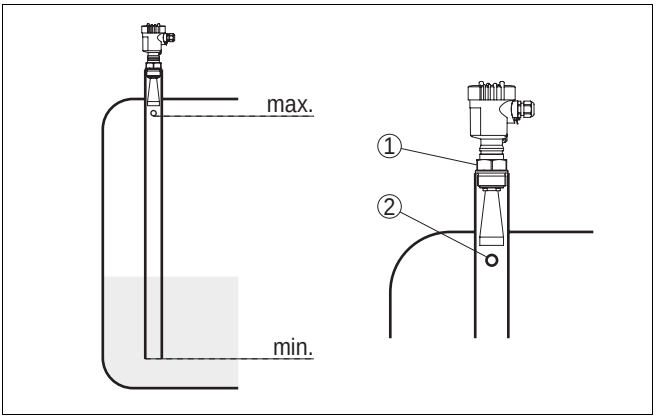


*Fig. 14: Pipe antenna systems in a tank*

*1 Marking of the polarisation direction*
*2 Vent hole max. ø 5 mm (0.2 in)*

If possible, the antenna diameter of the sensor should correspond to the inner diameter of the tube. With VEGAPULS 62 these are approx. 40 mm (1.6 in). The sensor can be used from tube diameters of 40 ... 80 mm (1.6 ... 3.2 in).

Take note of the necessary upper vent hole in the surge pipe which must by displaced by 90° to the polarisation direction on the sensor (see illustration: *Pipe antenna systems in a tank*).

As an alternative to the surge pipe in the vessel, a pipe system outside of the vessel is possible as bypass tube. For setup, select the function *Bypass tube*.

Direct the sensor in such a way that the polarisation marking on the process fitting is displaced by 90° to the tube holes or the tube connection openings (see illustration: *VEGAPULS in a bypass tube*).

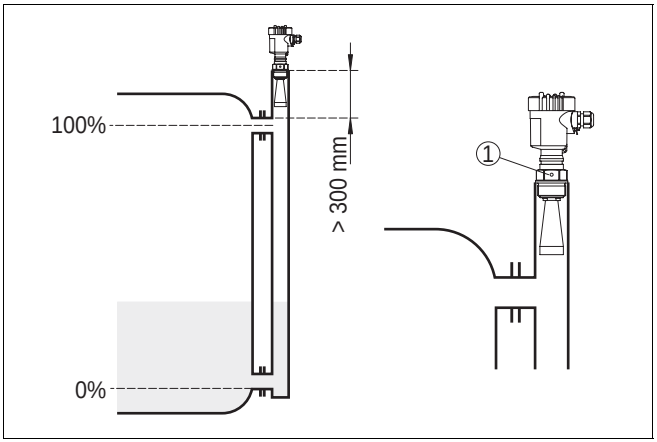


*Fig. 15: VEGAPULS in a bypass tube*

*1 Marking of the polarisation direction*

When mounting the sensor on a bypass tube, VEGAPULS 62 should be mounted at a distance of approx. 300 mm (12 in) or more from the upper pipe connection. In case the tube is very rough inside, an inserted tube (tube in tube) or a radar sensor with pipe antenna should be used.

## 4.5 Preparing the connection

**Note safety instructions**

Always observe the following safety instructions:

- Connect only in the complete absence of line voltage
- If overvoltages are expected, overvoltage arresters should be installed.

**Tip:**
We recommend VEGA overvoltage arresters ÜS-F-LB-I and ÜSB 62-36G.X.

**Take note of safety instructions for Ex applications**

In hazardous areas you should take note of the appropriate regulations, conformity and type approval certificates of the sensors and power supply units.

**Select power supply**

Power supply and current signal are transmitted via the same two-wire connection cable. The power supply range can differ depending on the instrument version. The exact range is stated in the Technical data in the Supplement.

Provide a reliable separation between the supply circuit and the mains circuits acc. to DIN VDE 0106 part 101. The VEGA power supply units VEGATRENN 149AEx, VEGASTAB 690, VEGADIS 371 as well as all VEGAMETs meet this requirement.

Bear in mind the following factors regarding supply voltage:

- the reduction of the output voltage of the power supply unit under nominal load (with a sensor current of 20.5 mA or 22 mA in case of fault signal)
- the influence of additional instruments in the circuit (see load values in Technical data)

**Select connection cable**

VEGAPULS 62 is connected with standard two-wire cable without screen. An outer cable diameter of 5 ... 9 mm ensures the seal effect of the cable entry. If electromagnetic interference is expected, we recommend the use of screened cable.

**Cable screening and grounding**

Connect the cable screen on both ends to ground potential. In the sensor, the screen must be connected directly to the internal ground terminal. The ground terminal outside on the housing must be connected to the potential equalisation (low impedance).

If potential equalisation currents are expected, the connection on the evaluation side must be made via a ceramic capacitor (e.g. 1 nF, 1500 V). The low frequency potential equalisation currents are thus suppressed, but the protective effect against high frequency interference signals remains.

**Select connection cable for Ex applications**

Take note of the corresponding installation regulations for Ex applications. In particular, make sure that no potential equalisation currents flow over the cable screen. In case of grounding on both sides this can be achieved by the use of a capacitor or a separate potential equalisation.

## 4.6 Connection procedure

Proceed as follows:

1 Unscrew the housing cover

2 If a PLICSCOM indicating and adjustment module is installed, remove it by turning it slightly to the left.

3 Loosen compression nut of the cable entry

4 Remove approx. 10 cm (4 in) of the cable mantle, strip approx. 1 cm (0.4 in) insulation from the ends of the individual wires

5 Insert the cable into the sensor through the cable entry

6 Lift the opening levers of the terminals with a screwdriver (see following illustration)

7 Insert the wire ends into the open terminals according to the wiring plan

8 Press down the opening levers of the terminals, you will hear the terminal spring closing

9 Check the hold of the wires in the terminals by lightly pulling on them

10 Connect the screen to the internal ground terminal and the external ground terminal to potential equalisation

11 Tighten the compression nut of the cable entry, the seal ring must completely encircle the cable

12 Screw the housing cover back on

The electrical connection is finished.

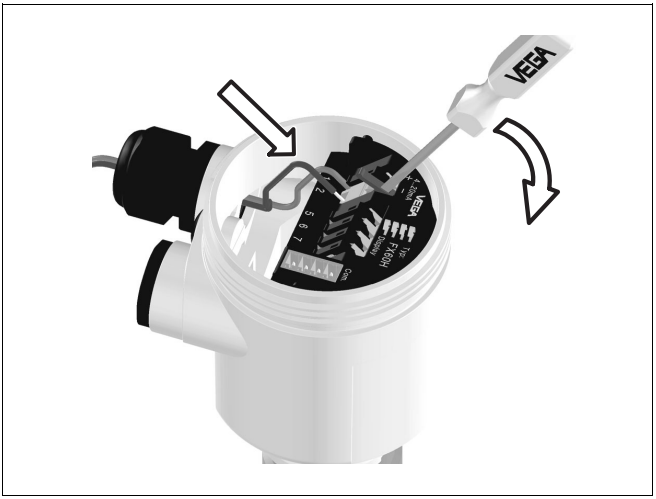


*Fig. 16: Connection steps 6 and 7*

## 4.7 Wiring plans, single chamber housing

The following illustrations apply to the non-Ex as well as to the Ex ia version.

28435-EN-050211

## Housing overview

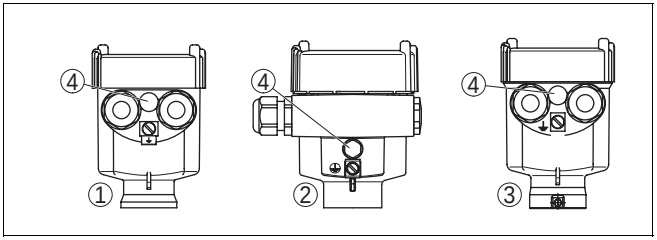


*Fig. 17: Material versions, single chamber housing*

1 *Plastic*
2 *Aluminium*
3 *Stainless steel*
4 *Filter element for pressure compensation*

## Electronics and connection compartment

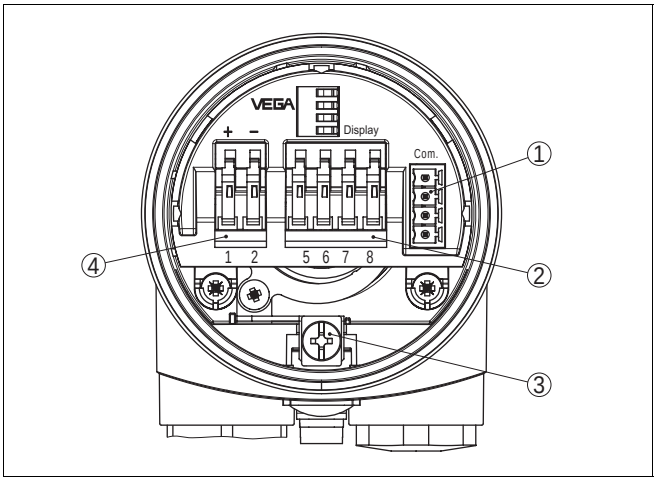


*Fig. 18: Electronics and connection compartment, single chamber housing*

1 *Plug connector for VEGACONNECT ($I^2C$ interface)*
2 *Spring-loaded terminals for connection of the ext. indication VEGADIS 61*
3 *Ground terminal for connection of the cable screen*
4 *Spring-loaded terminals for power supply and cable screen*

**Wiring plan**

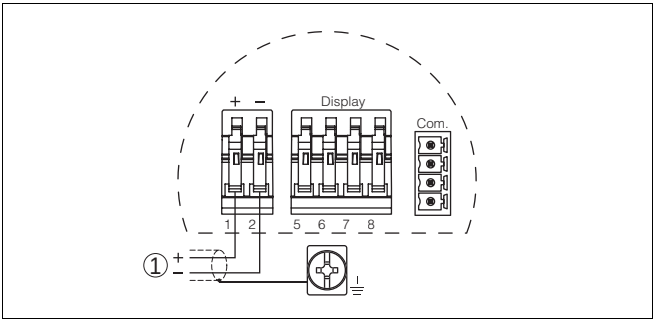


*Fig. 19: Wiring plan, single chamber housing*

*1 Power supply/Signal output*

## 4.8 Wiring plans, double chamber housing

The following illustrations apply to the non-Ex as well as to the Ex ia version. The Exd version is described in the next subchapter.

**Housing overview**

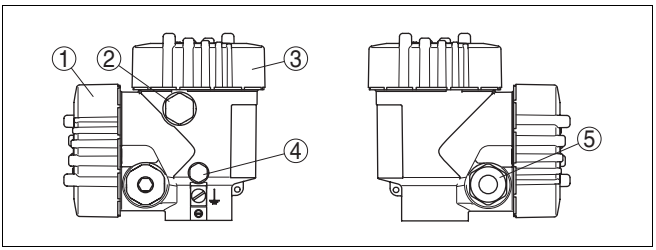


*Fig. 20: Double chamber housing*

*1 Housing cover, connection compartment*
*2 Blind stopper or plug M12x1 for VEGADIS 61 (option)*
*3 Housing cover, electronics compartment*
*4 Filter element for pressure compensation*
*5 Cable entry or plug*

28435-EN-050211

## Electronics compartment

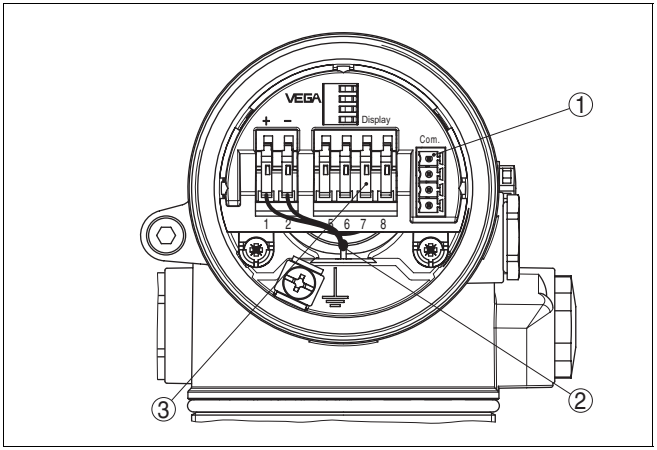


*Fig. 21: Electronics compartment, double chamber housing*

1 *Plug connector for VEGACONNECT ($I^2C$ interface)*
2 *Internal connection cable to the connection compartment*
3 *Terminals for VEGADIS 61*

## Connection compartment

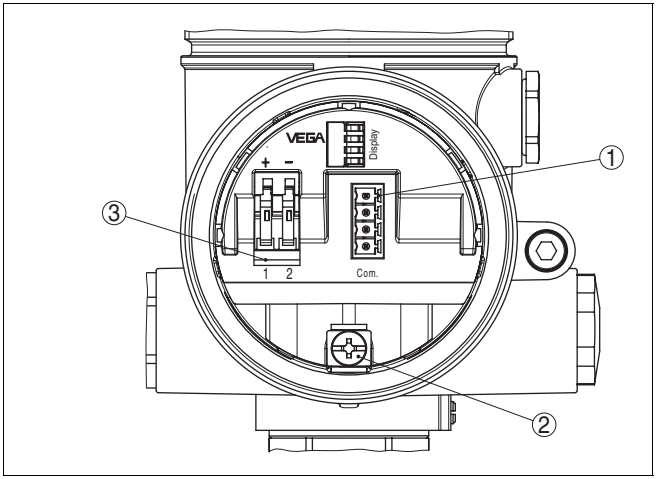


*Fig. 22: Connection compartment, double chamber housing*

1 *Plug connector for VEGACONNECT ($I^2C$ interface)*
2 *Ground terminal for connection of the cable screen*
3 *Spring-loaded terminals for power supply and cable screen*

## Wiring plan

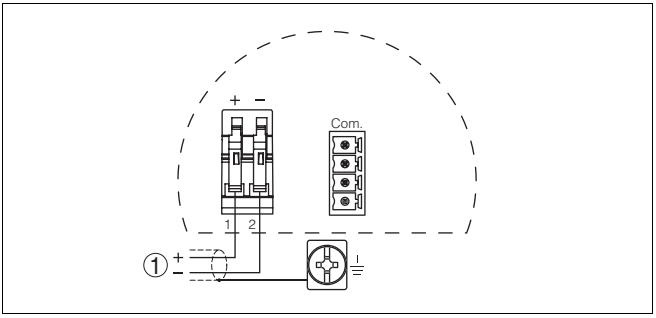


*Fig. 23: Connection compartment, double chamber housing*

*1 Power supply/Signal output*

# 4.9 Wiring plans, double chamber housing Exd

## Housing overview

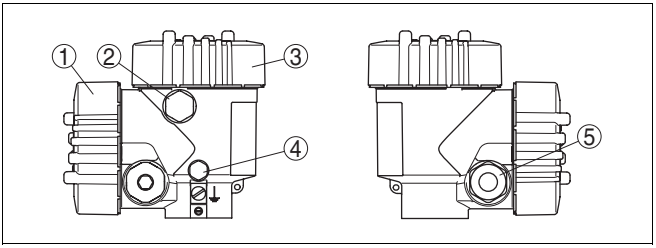


*Fig. 24: Double chamber housing*

*1 Housing cover, connection compartment*
*2 Blind stopper or plug M12x1 for VEGADIS 61 (option)*
*3 Housing cover, electronics compartment*
*4 Filter element for pressure compensation*
*5 Cable entry or plug*

## Electronics compartment

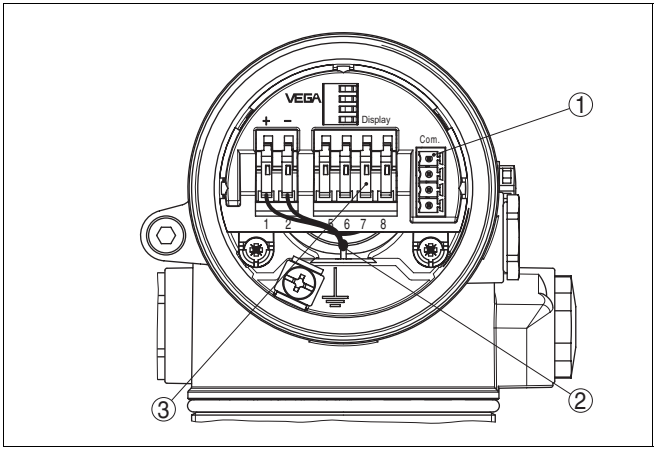


*Fig. 25: Electronics compartment, double chamber housing*

1 *Plug connector for VEGACONNECT ($I^2C$ interface)*
2 *Internal connection cable to the connection compartment*
3 *Terminals for VEGADIS 61*

## Connection compartment

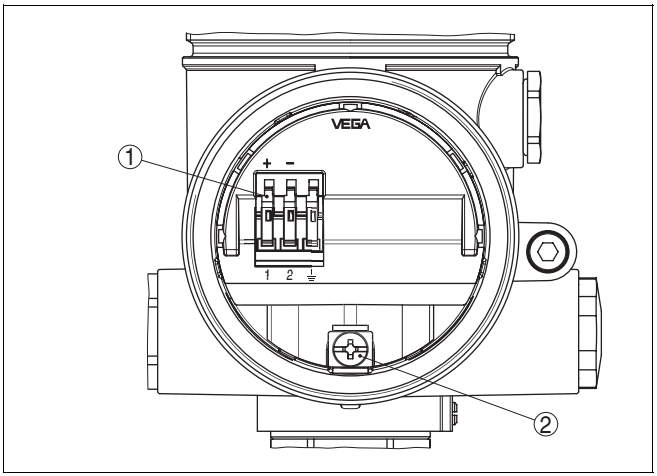


*Fig. 26: Connection compartment, double chamber housing Exd*

1 *Spring-loaded terminals for power supply and cable screen*
2 *Ground terminal for connection of the cable screen*

## Wiring plan

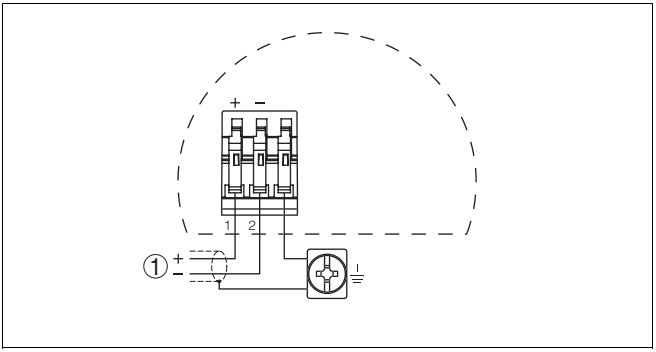


*Fig. 27: Wiring plan, double chamber housing Exd*

*1 Power supply/Signal output*

28435-EN-050211

# 5 Setup with the indicating and adjustment module PLICSCOM

## 5.1 Short description

**Function/Configuration**

The indicating and adjustment module PLICSCOM is used for measured value display, adjustment and diagnosis. It can be mounted in the following housing versions and instruments:

- All sensors of the plics® instrument family, in the single as well as in the double chamber housing (optionally in the electronics or connection compartment)
- external indicating and adjustment unit VEGADIS 61

**Note:**
You will find detailed information on the adjustment in the operating instructions manual of the indicating and adjustment module PLICSCOM.

## 5.2 Installing the indicating and adjustment module PLICSCOM

**Insert/remove PLICSCOM**

PLICSCOM can be inserted or removed at any time. An interruption of the power supply is not necessary.

To install, proceed as follows:

1 Unscrew the housing cover

2 Place PLICSCOM in the desired position on the electronics (you can choose any one of four different positions - each displaced by 90°)

3 Press PLICSCOM lightly onto the electronics and turn it to the right until it snaps in.

4 Screw housing cover with inspection window tightly back on

Removal is carried out in reverse order.

PLICSCOM is powered by the sensor, an additional connection is not necessary.

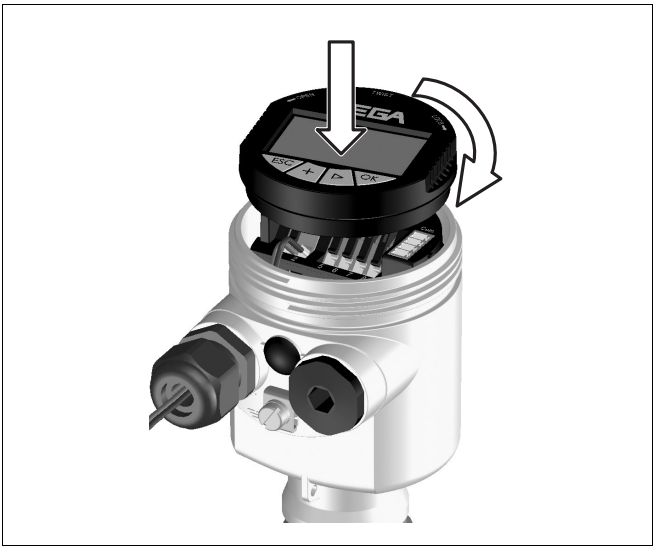


*Fig. 28: Installation of PLICSCOM*

**Note:**
If you intend to retrofit VEGAPULS 62 with PLICSCOM for continuous measured value indication, a higher cover with an inspection glass is required.

28435-EN-050211

## 5.3 Adjustment system

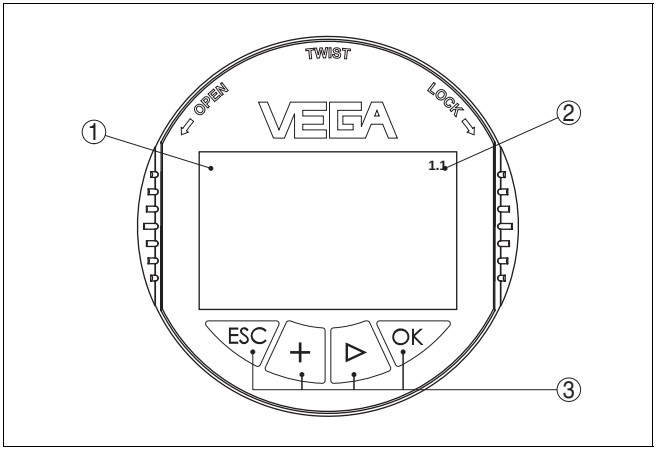


*Fig. 29: Indicating and adjustment elements*

*1 LC display*
*2 Indication of the menu item number*
*3 Adjustment keys*

**Key functions**

- ***[OK]*** key:
  - move to the menu overview
  - confirm selected menu
  - edit parameter
  - save value
- ***[–>]*** key to select:
  - menu change
  - list entry
  - editing position
- ***[+]*** key:
  - modify value of a parameter
- ***[ESC]*** key:
  - interrupt input
  - jump to the next higher menu

**Adjustment system**

The sensor is adjusted via the four keys of the indicating and adjustment module PLICSCOM. The LC display indicates the individual menu items. The functions of the individual keys are shown in the above illustration. Approx. 10 minutes after the last pressing of a key, an automatic reset to measured value indication is trigger-

ed. Any values not confirmed with ***[OK]*** will not be saved.

## 5.4 Setup procedure

**Switch on phase**

After VEGAPULS 62 is connected to power supply or after voltage recurrence, the instrument carries out a self-test for approx. 30 seconds. The following steps are carried out:

- internal check of the electronics
- indication of the instrument type, the firmware version as well as the sensor TAGs (sensor name)
- Output signal jumps briefly (approx. 10 seconds) to the set interference current.

Then the actual measured value is displayed and the corresponding current is transmitted to the cable[1)]

**Address setting HART-Multidrop**

In HART-Multidrop mode (several sensors on one input) the address must be set before continuing with the parameter adjustment. You will find a detailed description in the operating instructions manual of PLICSCOM or in the online help of PACTware™ or DTM.

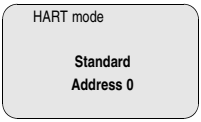


**Parameter adjustment**

Because VEGAPULS 62 is a distance measuring instrument, the distance from the sensor to the product surface is measured. In order to have the actual level displayed, an allocation of the measured distance to the percentage height must be carried out. To make this adjustment, the full and empty distances in the vessel are entered. If these values are not known, it is also possible to carry out the adjustment with other distances, e.g. 10 % and 90 %. Starting point of these distance values is always the seal surface of the thread or flange. The actual level is then calculated on the basis of these

1) The values correspond to the actual level as well as to the settings already carried out, e.g. default setting.

28435-EN-050211

entered values. At the same time, the operating range of the sensor is limited from maximum range to the requested range.

The real product level during this adjustment is not important, because the min./max. adjustment is always carried out without changing the product level. These settings can be made ahead of time without the instrument having to be installed.

In the main menu item Basic adjustment, the individual submenu items should be selected one after the other provided with the correct parameter values.

Start your parameter adjustment with the following menu items of the basic adjustment:

**Carrying out min. adjustment**

Proceed as follows:

1 Move from the measured value display to the main menu by pushing ***[OK]***.

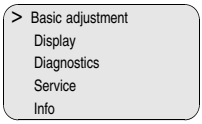


2 Select the menu item *Basic adjustment* with ***[–>]*** and confirm with ***[OK]***. Now the menu item min. adjustment is displayed.

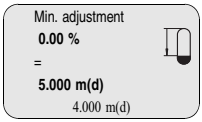


3 Prepare the percentage value for editing with ***[OK]*** and set the cursor to the requested position with ***[–>]***. Set the requested percentage value with ***[+]*** and save with ***[OK]***. The cursor jumps now to the distance value.

4 Enter the appropriate distance value in m (corresponding to the percentage value) for the empty vessel (e.g. distance from the sensor to the vessel bottom).

5 Save the settings with ***[OK]*** and move to max. adjustment with ***[–>]***.

**Carrying out max. adjustment**

Proceed as follows:

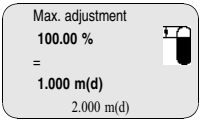


1 Prepare the percentage value for editing with ***[OK]*** and set the cursor to the requested position with ***[–>]***. Set the requested percentage value with ***[+]*** and save with ***[OK]***. The cursor jumps now to the distance value.

2 Enter the appropriate distance value in m (corresponding to the percentage value) for the full vessel. Make sure that the max. level must be beneath the dead zone.

3 Save the settings with ***[OK]*** and move to the medium selection with ***[–>]***.

**Medium selection**

Each product has different reflective properties. In liquids additional interfering factors are fluctuating product surfaces and foam generation. In solids, this is the dust generation, material cone and additional echoes caused by the vessel wall. To adapt the sensor to the different applications, you should choose in this menu item *Liquid* or *Solid*.

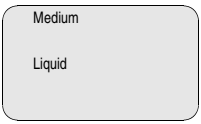


According to the conductivity and the dielectric constant value of liquids, the reflection properties can differ considerably. Therefore additional option such as *Solvent*, *Chem. mixture* and *Water based* are offered below the menu item Liquid.

For solids you choose also *Powder/Dust*, *Granular/ Pellets* or *Ballast/Pebbels*.

28435-EN-050211

With the medium selection, the sensor is adapted perfectly to the product and the reliability, particularly in products with bad reflective properties is considerably increased.

Enter the requested parameter via the respective keys, save your settings and jump to the next menu item with the ***[–>]*** key.

**Vessel form**

Apart from the medium also the vessel form can influence the measurement. To adapt the sensor to these conditions, this menu item offers (depending on either liquid or solid is selected) different options. For *Liquid* these are *Storage tank*, *Stilling tube*, *Open vessel* or *Stirred vessel*, for *Solid  Silo* or *Bunker*.

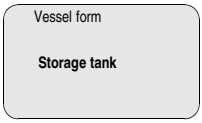


Enter the requested parameter via the respective keys, save your settings and jump to the next menu item with the ***[–>]*** key.

**Damping**

To suppress fluctuation in the measured value display, e.g. by agitated product surfaces, an integration time can be set. This time can be between 0 and 999 seconds. Please note that the reaction time of the entire measurement will be longer and the sensor will react to quick changes of the measured value with a corre-sponding delay. In general, a time of a few seconds is sufficient to smooth the measured value display.

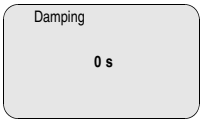


Enter the requested parameter via the respective keys, save your settings and jump to the next menu item with the ***[–>]*** key.

**Linearization curve**

A linearization is necessary for all vessels in which the vessel volume does not increase linearly with the level - e.g. in a cylindrical or spherical tank - and the indication or output of the volume is requested. Corresponding linearization curves are preprogrammed for these vessels. They represent the correlation between the level percentage and vessel volume. By activating the appropriate curve, the volume percentage of the vessel is displayed correctly. If the volume should not be displayed in percent but e.g. in l or kg, a scaling can be set in the menu item *Display*.

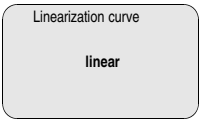


Enter the requested parameter via the respective keys, save your settings and jump to the next menu item with the ***[–>]*** key.

**Sensor-TAG**

In this menu item you can enter an unambiguous designation for the sensor, e.g. the measurement loop name or the tank or product designation. In digital systems and in the documentation of larger plants, a unique designation should be entered for exact identification of individual measuring sites.

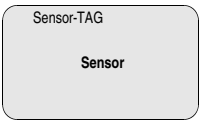


With this menu item, the Basic adjustment is finished and you can now jump to the main menu with the ***[ESC]*** key.

**False echo storage**

High sockets or vessel installations, such as e.g. struts or agitators as well as buildup and weld joints on the vessel walls cause false reflections which influence the measurement. A false echo storage detects and marks these false echoes so that they are no longer taken into

account for the level measurement. A false echo memory should be created with empty vessel so that all probably existing false reflections can be detected.

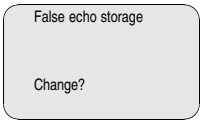


Proceed as follows:

1 Move from the measured value display to the main menu by pushing ***[OK]***.

2 Select the menu item *Service* with ***[–>]*** and confirm with ***[OK]***. Now the menu item false echo storage is displayed.

3 Confirm *False echo storage - Change now* with ***[OK]*** and select in the below menu *Create new*. Enter the actual distance from the sensor to the product surface. All false echoes in this area are detected by the sensor and saved after confirming with ***[OK]***.

**Note:**
Check the distance to the product surface as in case of a wrong (too big) setting, the real level will be saved as false echo. Hence the level can no longer be detected in this area.

**Optional settings**

Additional adjustment and diagnosis options such as e. g. scaling, simulation or trend curve presentation are shown in the following menu schematic. You will find a detailed description of these menu items in the operating instructions manual of the indicating and adjustment module PLICSCOM.

# 5.5 Menu schematic

## Basic adjustment

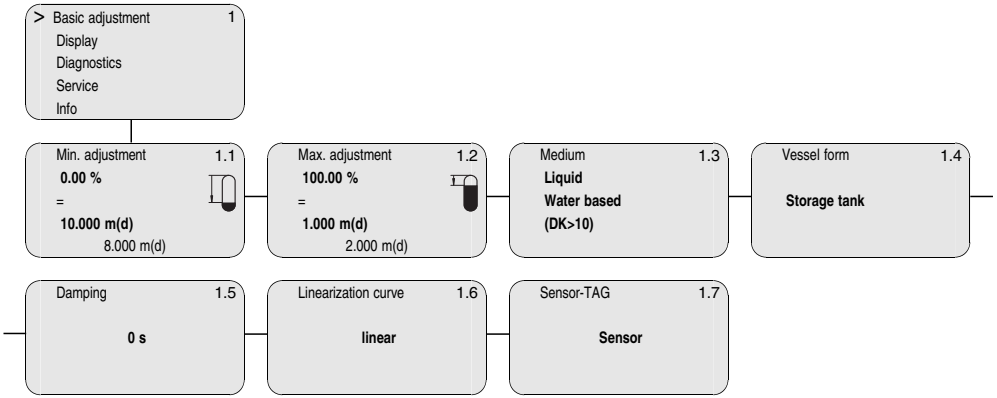


## Display

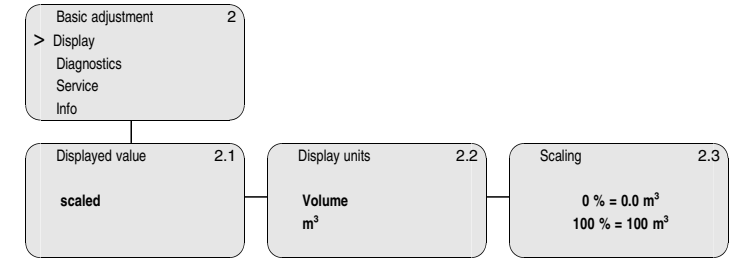


## Diagnostics

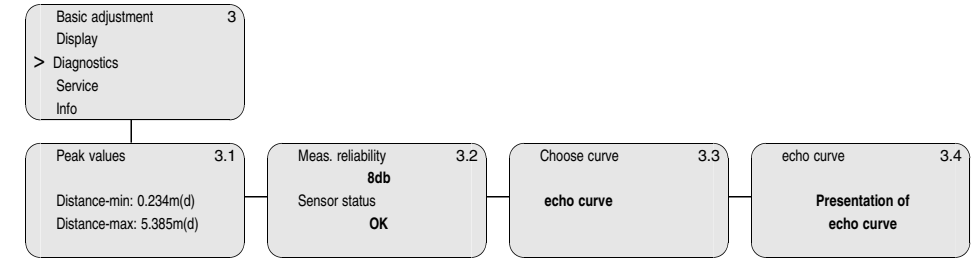


28435-EN-050211

## Service

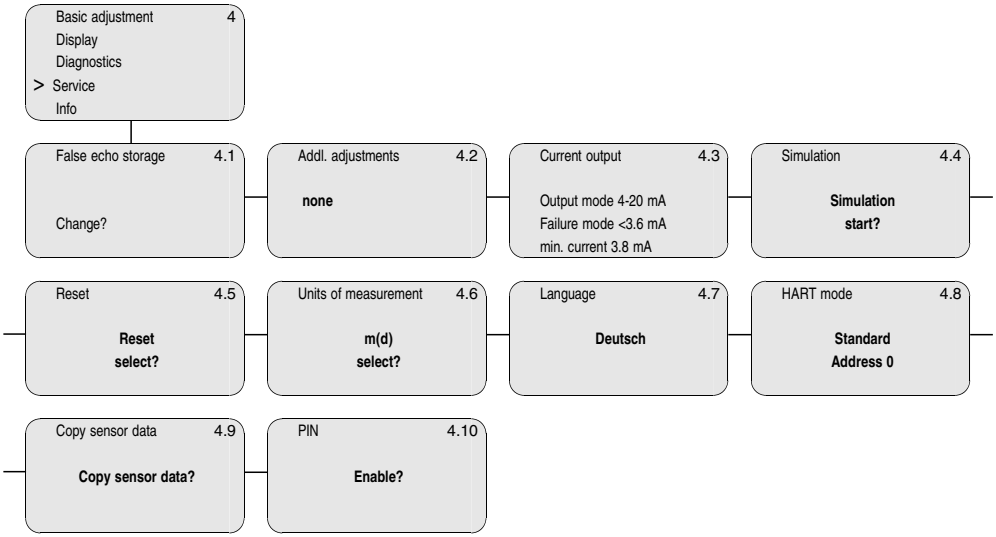


## Info

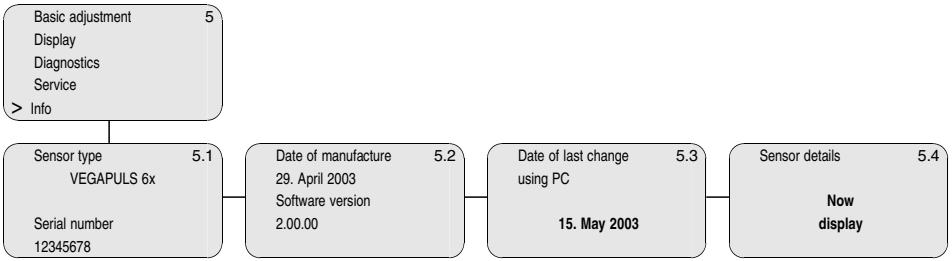


28435-EN-050211

# 6 Setup with PACTware™

## 6.1 Connecting the PC

**Connecting the PC directly to the sensor**

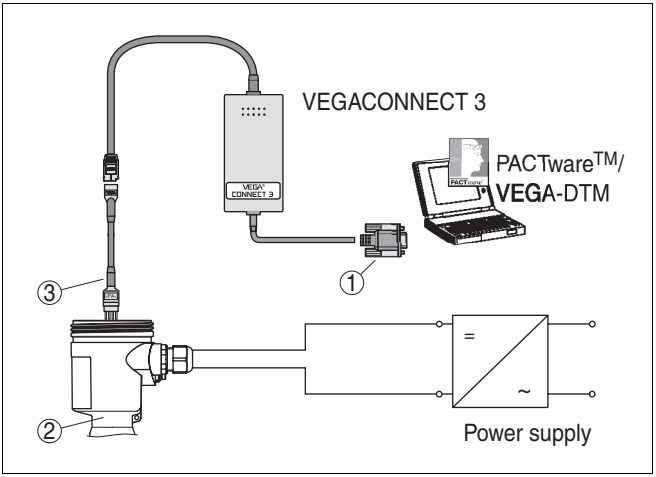


*Fig. 30: Connecting the PC directly to the sensor*

*1 RS232 connection*
*2 VEGAPULS 62*
*3 $I^2C$ adapter cable for VEGACONNECT 3*

Necessary components:

- VEGAPULS 62
- PC with PACTware™ and suitable VEGA-DTM
- VEGACONNECT 3 with $I^2C$ adapter cable (article no. 2.27323)
- power supply unit

28435-EN-050211

**Connecting the PC to the signal cable**

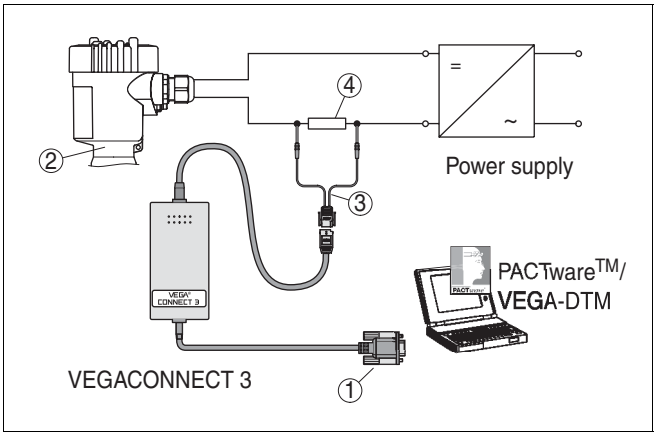


*Fig. 31: Connecting the PC to the signal cable*

*1 RS232 connection*
*2 VEGAPULS 62*
*3 HART adapter cable for VEGACONNECT 3*
*4 HART resistance 250 Ohm*

Necessary components:

- VEGAPULS 62
- PC with PACTware™ and suitable VEGA-DTM
- VEGACONNECT 3 with HART adapter cable (art. no. 2.25397)
- HART resistance approx. 250 Ohm
- power supply unit

**Note:**
With power supply units with integrated HART resistance (internal resistance approx. 250 Ohm), an additional external resistance is not necessary (e.g. VEGATRENN 149A, VEGADIS 371, VEGAMET 381). In such cases, VEGACONNECT 3 can be connected in parallel to the 4 ... 20 mA cable.

## 6.2 Parameter adjustment with PACTware™

Further setup steps are described in the operating instructions manual *DTM Collection/PACTware* attached to each CD and which can also be downloaded

from our homepage. A detailed description is available in the online help of PACTware™ and the VEGA-DTMs.

**Note:**
Keep in mind that for setup of VEGAPULS 62, DTM-Collection 06/2003 or a newer version should be applied.

All currently available VEGA-DTMs are provided in the DTM Collection on CD and can be bought from the responsible VEGA agency for a token fee. This CD includes also the up-to-date PACTware™ version. The basic version of this DTM Collection incl. PACTware™ is also available as a free-of-charge download from the Internet.

# 7 Maintenance and fault rectification

## 7.1 Maintenance

When used as directed in normal operation, VEGAPULS 62 is completely maintenance-free.

## 7.2 Fault rectification

**Causes of failure**

VEGAPULS 62 offers maximum reliability. Nevertheless, failures may occur during operation. These can have the following causes, e.g.:

- Sensor
- Process
- Power supply
- Signal processing.

**Fault rectification**

The first measures to be taken are to check the output signal and evaluate fault messages via the adjustment module PLICSCOM. The procedure is described below. Further comprehensive diagnostics can be carried out on a laptop with the software PACTware™ and the suitable DTM. In many cases, the reasons can be determined in this way and faults can be rectified.

**24 hour service hotline**

Should these measures not be successful, please call in urgent cases the VEGA service hotline under the phone number **+49 1805 858550**.

The hotline is available to you 7 days a week round-the-clock. Since we offer this service world-wide, the support is only available in the English language. The service is free of charge, only the standard telephone costs will be charged.

**Checking the 4 ... 20 mA signal**

Connect a hand-held multimeter with a suitable measuring range acc. to the wiring plan.

**?** 4 ... 20 mA signal is not stable

- level fluctuations

→ set integration time via PLICSCOM or PACTware™

**?** 4 ... 20 mA signal missing

- incorrect connection to power supply

→ check connection acc. to chapter "Connection procedure" and correct, if necessary, acc. to chapter "Wiring plans"

- no power supply

→ check cables for line break, repair, if necessary

- supply voltage too low or load resistance too high

→ check and adapt, if necessary

**?** Current signal greater than 22 mA or less than 3.6 mA

- Electronics module defective

→ exchange instrument or return it for repair

In Ex applications, the regulations for the wiring of intrinsically safe circuits must be observed.

**Fault messages via PLICSCOM**

**?** E013

- no measured value available

→ sensor in boot phase

→ sensor does not find an echo, e.g. through incorrect installation or wrong parameter adjustment

**?** E017

- adjustment span too small

→ Carry out a fresh adjustment and increase the distance between min. and max. adjustment

**?** E036

- no operable sensor software

→ carry out a software update or return instrument for repair

**?** E041

- hardware error, electronics defective

→ exchange instrument or return it for repair

## 7.3 Exchanging the oscillator

**Preparations**

If the electronics module is defective, it can be replaced by the user

Oscillator PS-E.60**K**H. is suitable for **K**-band VEGAPULS 61, 62, 63 with 4 ... 20 mA/HART. The following versions are available:

- PS-E.60KH**X** (without approvals)
- PS-E.60KH**A** (approvals CA, DA, EA acc. to VEGA product list)
- PS-E.60KH**C** (approvals XM, CX, CM, CK, CI, DX, DM, DK, DI; EX, GX, UX, UF acc. to VEGA product list)

In Ex applications, only an oscillator with appropriate Ex approval must be used.

If there is no oscillator available on site, it can be ordered from the responsible VEGA agency.

The new oscillator must be according to the order data of the sensor. These can be loaded as follows:

- at the premises by VEGA
- on site by the user.

**Information:**
When loading on site, first of all the respective file must be downloaded from the Internet (see *Setup*).

In both cases, the serial number of VEGAPULS 62 is necessary. The serial numbers are stated on the type label of VEGAPULS 62 or on the delivery note.

**Exchange**

Proceed as follows:

1 Switch off power supply

2 Unscrew the housing cover

3 Lift the opening levers of the terminals with a screwdriver

4 Pull the connection cables out of the terminals

5 Loosen the two screws with a Phillips screwdriver (size 1)

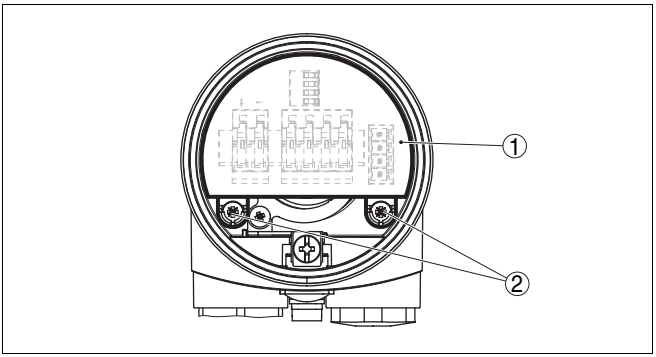


*Fig. 32: Loosen the screws*

*1 Electronics module*
*2 Screws (2 pcs.)*

6 Pull the existing oscillator out by holding the opening levers.

7 Compare the new oscillator with the old one. The statements on the type label must correspond. This applies particularly to instruments in Ex areas.

8 Insert the oscillator

9 Screw in and tighten the two screws with a Phillips screwdriver.

10 Insert the wire ends into the open terminals according to the wiring plan

11 Close the opening levers of the terminals, you will hear the terminal spring closing

12 Check the hold of the wires in the terminals by lightly pulling on them

13 Check the tightness of the cable entry. The seal ring must completely encircle the cable.

14 Screw the housing cover back on

The electronics exchange is finished.

As a rule, the exchange of the oscillator must be documented internally when used in Ex applications.

**Setup**

If the serial number of the oscillator is stated when ordering, VEGAPULS 62 is ready for operation directly after mounting the oscillator.

If you are using an universal electronics from stock, you have to load the sensor data after mounting the oscillator.Use the item "serial number search" under www.vega.com. After having entered the serial number, the order data of the sensor will be displayed. Below the order data you will find "Sensor data for Service-DTM" as an XML file. Load this file to your PC and then into the sensor via PACTware™/Service DTM.

After VEGAPULS 62 is ready for operation, settings carried out on site must be repeated.

**Tip:**
Use the copy function of the adjustment module PLICSCOM or the adjustment software PACTware™.

## 7.4 Instrument repair

If it is necessary to repair VEGAPULS 62 please proceed as follows:

You can download a return form (23 KB) from our Internet homepage www.vega.com under "Services > Downloads > Forms and Certificates > Repair form.

By doing this you help us carry out the repair quickly and without having to call for additional information.

- Print and fill out one form per instrument
- Clean the instrument and pack it damage-proof
- Attach the completed form and possibly also a safety data sheet to the instrument
- Send the instrument to the respective address of your agency. In Germany to the VEGA headquarters in Schiltach.

# 8 Dismounting

## 8.1 Dismounting procedure

**Warning:**
Before dismounting, be aware of dangerous process conditions such as e.g. pressure in the vessel, high temperatures, corrosive or toxic products etc.

Take note of chapters "Mounting" and "Connecting to power supply" and carry out the listed steps in reverse order.

## 8.2 Disposal

VEGAPULS 62 consists of materials which can be recycled by specialised recycling companies. We have purposely designed the electronic modules to be easily separable. Mark the instrument as scrap and dispose of it according to government regulations (electronic scrap ordinance, ...)

Materials: see Technical data

If you cannot dispose of the instrument properly, please contact us about disposal methods or return.

# 9 Supplement

## 9.1 Technical data

### General data

| | |
|---|---|
| Materials, non-wetted parts | |
| – housing | plastic PBT (Polyester), Alu-die casting powder-coated, 316L (stainless steel 1.4435) |
| – seal ring between housing and housing cover | NBR (stainless steel housing), silicone (Alu/plastic housing) |
| – inspection window in housing cover for PLICSCOM | Polycarbonate |
| – ground terminal | stainless steel 1.4571/1.4435 |
| Materials, wetted parts | |
| – process fitting | thread 316 L (stainless steel 1.4435), Hastelloy C22; flanges 316 L (stainless steel 1.4435), Hastelloy C22 plated |
| – Antenna | 316 L (stainless steel 1.4435), PTFE (TFM 1600 PTFE) |
| – seal, antenna system | Viton, Kalrez 2035, 6230, 6375, 6623 |
| Weight with horn antenna | |
| – process fitting, thread | 2.0 ... 2.8 kg (4.4 ... 6.2 lbs), depending on the thread size and housing |
| – process fitting, flange | 4.2 ... 15.4 kg (9.3 ... 34 lbs), depending on the flange size and housing |
| Weight with parabolic antenna | |
| – process fitting, thread | 2.8 ... 3.6 kg (6.2 ... 13.7 lbs), depending on the thread size and housing |
| – process fitting, flange | 5.0 ... 16.2 kg (11 ... 35.7 lbs), depending on the flange size and housing |

## Output variable

| | |
|---|---|
| Output signal | 4 ... 20 mA/HART |
| Resolution | 1.6 µA |
| Fault signal | current output unchanged, 20.5 mA, 22 mA, < 3.6 mA (adjustable) |
| Current limitation | 22 mA |
| Load | see load diagram in Power supply |
| Integration time (63% of the input variable) | 0 ... 999 s, adjustable |
| Rise time | 150 ms (ti: 0 s, 0 ... 100 %) |
| Fulfilled Namur recommendation | NE 43 |

## Input variable

| | |
|---|---|
| Parameter | distance between process fitting and product surface |
| Min. distance from antenna end | 50 mm (2 in) |
| Recommended meas. range depending on the antenna diameter | |
| – ø 40 mm (1.6 in) | up to 10 m (33 ft) |
| – ø 48 mm (1.9 in) | up to 15 m (50 ft) |
| – ø 75 mm (3 in), ø 95 mm (3.7 in), parabolic antenna | up to 30 m (98.4 ft) |

## Accuracy (similar to DIN EN 60770-1)

Reference conditions acc. to DIN EN 61298-1

| | |
|---|---|
| – temperature | 18 ... 30°C (64 ... 86°F) |
| – relative humidity | 45 ... 75 % |
| – pressure | 860 ... 1060 mbar (86 ... 106 kPa or 12.5 ... 15.4 psi) |

## Characteristics curve deviation and measurement characteristics[2)]

| | |
|---|---|
| Average temperature coefficient of the zero signal (temperature error) | 0.06 %/10 K |
| Resolution, general | max. 1 mm |
| Frequency | K-band (26 GHz technology) |
| Interval | approx. 1 s |
| Beam angle with horn antenna, depending on the antenna diameter | |
| – ø 40 mm | 22° |
| – ø 48 mm | 18° |
| – ø 75 mm | 10° |
| – ø 95 mm | 8° |
| Beam angle with parabolic antenna | 3.5° |
| Adjustment time[3)] | > 1 s (dependent on the parameter adjustment) |
| Max. emitted power | < 25 mW EIRP [4)] |
| Received average emitted power reaching an object directly in front of the antenna | |
| – distance 1 m | 0.4 … 3.2 nW per $cm^2$ (0.4 … 3.2 x $10^{-9}$ $W/cm^2$) |
| – distance 5 m | 0.02 ... 0.13 nW per $cm^2$ (0.02 ... 0.13 x $10^{-9}$ $W/cm^2$) |
| Accuracy | see diagram |

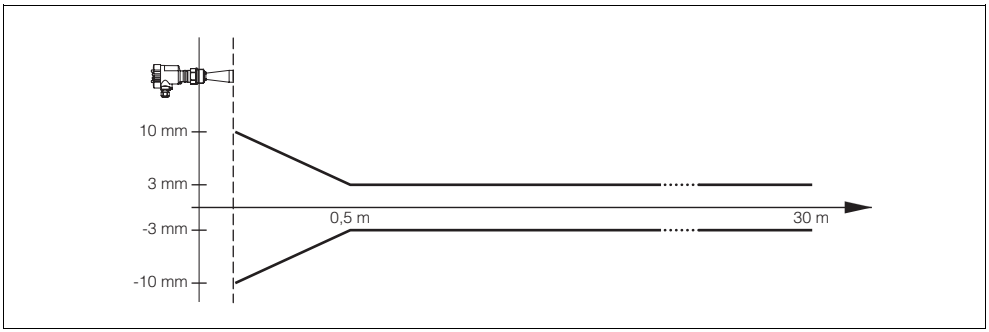


*Fig. 33: Accuracy VEGAPULS 62*

2) Relating to the nominal range, incl. hysteresis and repeatability, determined acc. to the limit point method.
3) Time to output the correct level (with max. 10 % deviation) after a sudden level change.
4) EIRP: Equivalent isotropically radiated power.

28435-EN-050211

## Ambient conditions

| | |
|---|---|
| Ambient, storage and transport temperature | |
| – without PLICSCOM | -40 ... +80°C (-40 ... +176°F) |
| – with PLICSCOM | -20 ... +70°C (-4 ... +158°F) |

## Process conditions

| | |
|---|---|
| Vessel pressure horn antenna | -1 ... 40 bar (-100 ... 4000 kPa or -14.5 ... 580) |
| vessel pressure parabolic antenna | -1 ... 6 bar (-100 ... 4000 kPa or -14.5 ... 87 psi) |
| Process temperature (measured on the process fitting) depending on the seal of the antenna system | |
| – Viton | -40 ... +130°C (-40 ... +266°F) |
| – Viton with temperature adapter | -40 ... +200°C (-40 ... +392°F) |
| – Kalrez 2035, 6230, 6623 | -15 ... +130°C (-5 ... +266°F) |
| – Kalrez 2035, 6230 with temperature adapter | -15 ... +200°C (-5 ... +392°F) |
| – Kalrez 6375 | -20 ... +130°C (-4 ... +266°F) |
| – Kalrez 6375 with temperature adapter | -20 ... +200°C (-4 ... +392°F) |
| Vibration resistance | mechanical vibrations with 4 g and 5 … 100 Hz [5] |

## Data on rinsing air connection

| | |
|---|---|
| Pressure | max. 6 bar (87 psi) |
| Thread | G⅛A |
| Check valve (option, attached with Ex version) | |
| – Material | 316Ti (stainless steel 1.4571) |
| – Seal | Viton |
| – for tube diameter | 6 mm |
| – opening pressure | 0.5 bar (7.3 psi) |
| – nominal pressure stage | PN 250 |

[5] Tested acc. to the regulations of German Lloyd, GL directive 2

## Electromechanical data

| | |
|---|---|
| Cable entry/plug[6] | |
| – single chamber housing | • 1x cable entry M20x1.5 (cable-ø 5 … 9 mm), 1x blind stopper M20x1.5<br>or:<br>• 1 x closing cap ½ NPT, 1 x blind stopper ½ NPT<br>or:<br>• 1x plug (depending on the version), 1x blind stopper M20x1.5 |
| – double chamber housing | • 1 x cable entry M20x1.5 (cable-ø 5 … 9 mm), 1 x blind stopper M20x1.5, plug M12x1 for VEGADIS 61 (option)<br>or:<br>• 1x closing cap ½ NPT, 1x blind stopper ½ NPT, plug M12x1 for VEGADIS 61 (option)<br>or:<br>• 1x plug (depending on the version), 1x blind stopper M20x1.5, plug M12x1 for VEGADIS 61 (option) |
| Spring-loaded terminals | for wire cross sections up to 2.5 $mm^2$ |

## Indicating and adjustment module PLICSCOM

| | |
|---|---|
| Power supply and data transmission | through sensor via gold-plated sliding contacts ($I^2C$ bus) |
| Indication | LC display in dot matrix |
| Adjustment elements | 4 keys |
| Protection | |
| – unassembled | IP 20 |
| – mounted into the sensor without cover | IP 40 |

[6] depending on the version M12x1, acc. to DIN 43650, Harting, Amphenol-Tuchel, 7/8" FF

28435-EN-050211

Materials

| | |
|---|---|
| – housing | ABS |
| – inspection window | Polyester foil |

## Power supply

Supply voltage

| | |
|---|---|
| – non-Ex instrument | 14 ... 36 V DC |
| – EEx ia instrument | 14 ... 30 V DC |
| – EExd ia instrument | 20 ... 36 V DC |

Permissible residual ripple

| | |
|---|---|
| – < 100 Hz | $U_{ss}$ < 1 V |
| – 100 Hz ... 10 kHz | $U_{ss}$ < 10 mV |

Load see diagram

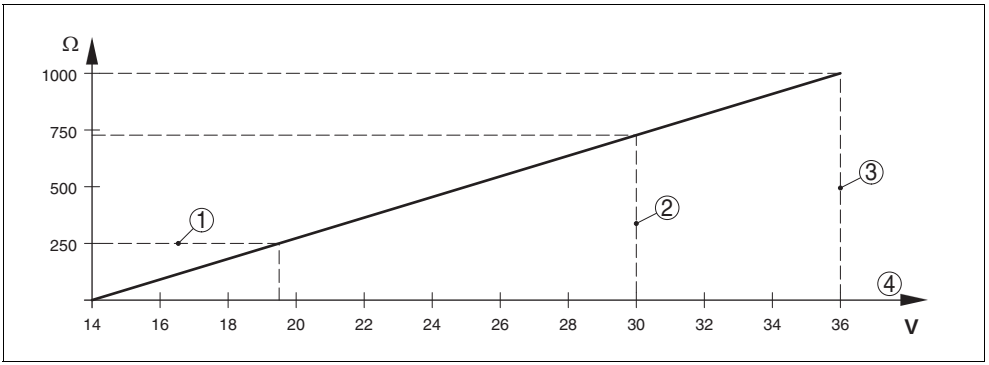


*Fig. 34: Voltage diagram*
*1 HART load*
*2 Voltage limit EEx ia instrument*
*3 Voltage limit non-Ex instrument/Exd instrument*
*4 Supply voltage*

## Electrical protective measures

| | |
|---|---|
| Protection | IP 66/IP 67 |
| Overvoltage category | III |
| Protection class | II |

## Approvals[7][8]

| | |
|---|---|
| ATEX ia | ATEX II 1G, 1/2G, 2G EEx ia IIC T6; ATEX II 1G, 1/2G, 2G EEx ia IIC T5+ATEX II 1/2D IP6X T6 |
| ATEX d | ATEX II 1/2G, 2G EEx d ia IIC T6; ATEX II 1/2G, 2G EEx d ia IIC T5+ATEX II 1/2D IP6X T6 |
| ATEX D | ATEX II 1/2 D IP 6X T |
| ATEX m e | ATEX II 1/2 G 2 G EEx m e ia IIC T6 |
| IEC ia | IEC Ex ia IIC T6 |
| IEC d | IEC Ex d ia IIC T6 |
| FM | FM Cl.I, Div2 (NI)+Cl.II, III, Div1 (DIP); FM Cl.I-III, Div 1 (IS) |
| Ship approvals | GL, LRS, ABS, CCS, RINA |
| Others | WHG |

7) Deviating data with Ex applications: see separate safety instructions

8) depending on order specification

28435-EN-050211

## 9.2 Dimensions

### Housing

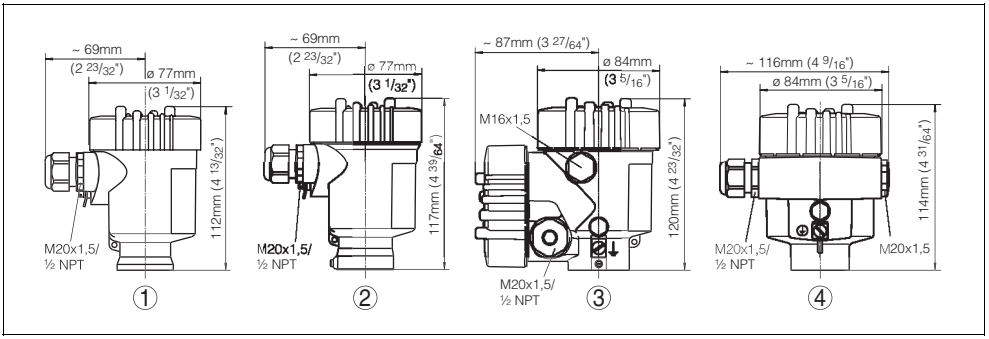


*Fig. 35: Housing versions (with integrated PLICSCOM the height of the housing increases by 9 mm/0.35 in)*
*1 Plastic housing*
*2 Stainless steel housing*
*3 Aluminium double chamber housing*
*4 Aluminium housing*

28435-EN-050211

# VEGAPULS 62 with horn antenna in threaded version

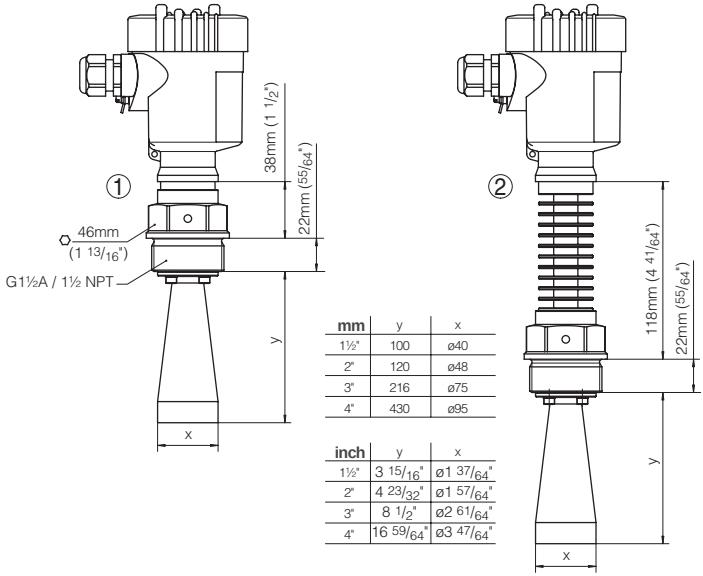


| mm | y | x |
|---|---|---|
| 1½" | 100 | ø40 |
| 2" | 120 | ø48 |
| 3" | 216 | ø75 |
| 4" | 430 | ø95 |

| inch | y | x |
|---|---|---|
| 1½" | 3 15/16" | ø1 37/64" |
| 2" | 4 23/32" | ø1 57/64" |
| 3" | 8 1/2" | ø2 61/64" |
| 4" | 16 59/64" | ø3 47/64" |

*Fig. 36: VEGAPULS 62 with horn antenna in threaded version*
*1 Standard*
*2 with temperature adapter*

28435-EN-050211

# VEGAPULS 62 with horn antenna in threaded version with purging air connection

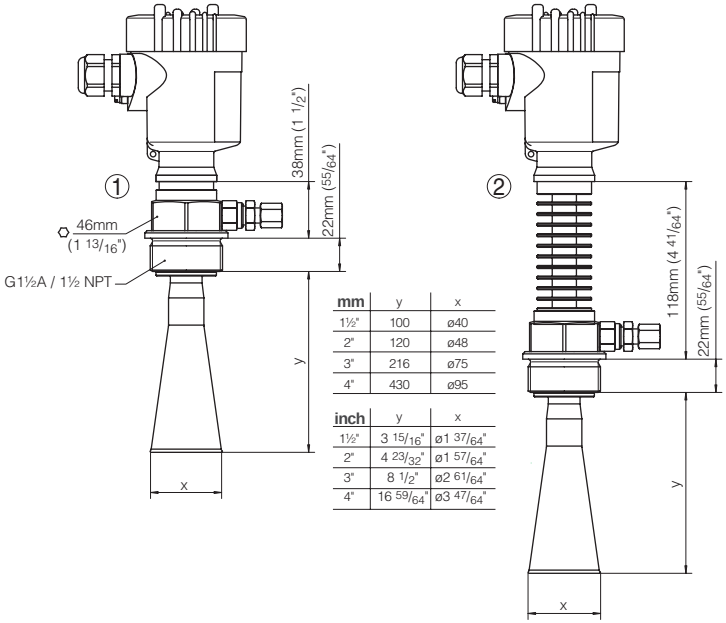


| mm | y | x |
|---|---|---|
| 1½" | 100 | ø40 |
| 2" | 120 | ø48 |
| 3" | 216 | ø75 |
| 4" | 430 | ø95 |

| inch | y | x |
|---|---|---|
| 1½" | 3 15/16" | ø1 37/64" |
| 2" | 4 23/32" | ø1 57/64" |
| 3" | 8 1/2" | ø2 61/64" |
| 4" | 16 59/64" | ø3 47/64" |

*Fig. 37: VEGAPULS 62 with horn antenna in threaded version with purging air connection and reflux valve (option)*
*1 Standard*
*2 with temperature adapter*

28435-EN-050211

# VEGAPULS 62 with horn antenna in threaded version with purging air connection and antenna extension

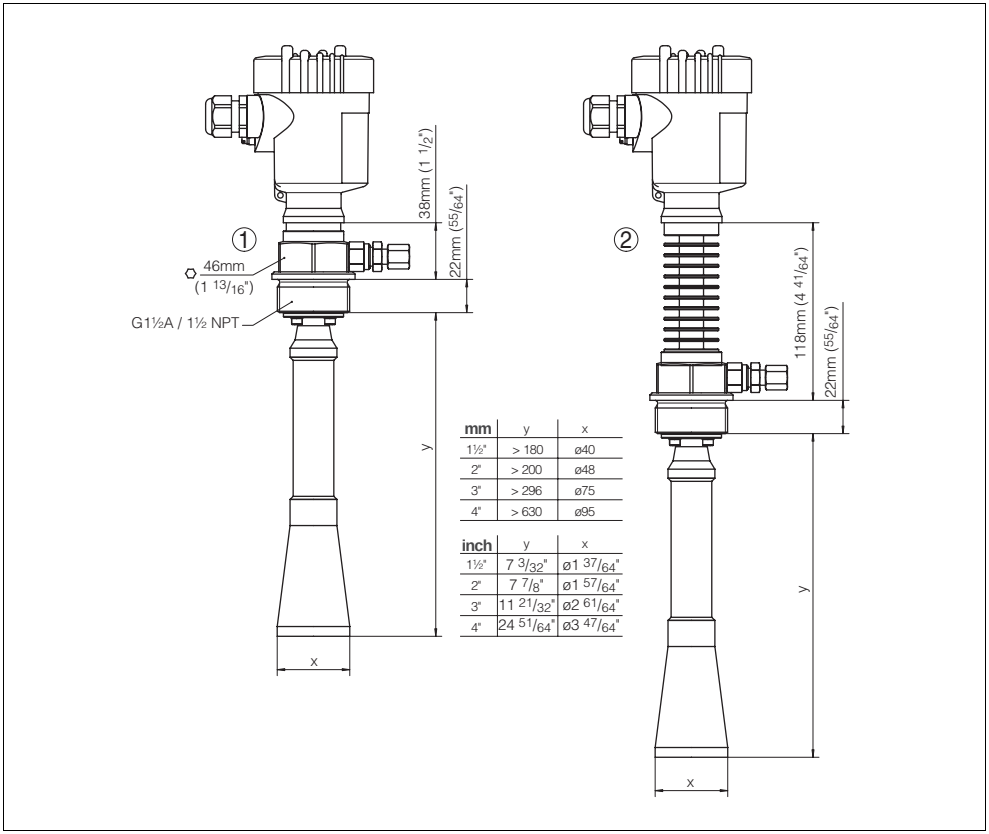


| mm | y | x |
|---|---|---|
| 1½" | > 180 | ø40 |
| 2" | > 200 | ø48 |
| 3" | > 296 | ø75 |
| 4" | > 630 | ø95 |

| inch | y | x |
|---|---|---|
| 1½" | 7 3/32" | ø1 37/64" |
| 2" | 7 7/8" | ø1 57/64" |
| 3" | 11 21/32" | ø2 61/64" |
| 4" | 24 51/64" | ø3 47/64" |

*Fig. 38: VEGAPULS 62 with horn antenna in threaded version with purging air connection, antenna extension and reflux valve (option)*

*1 Standard*

*2 with temperature adapter*

28435-EN-050211

# VEGAPULS 62 with horn antenna in flange version

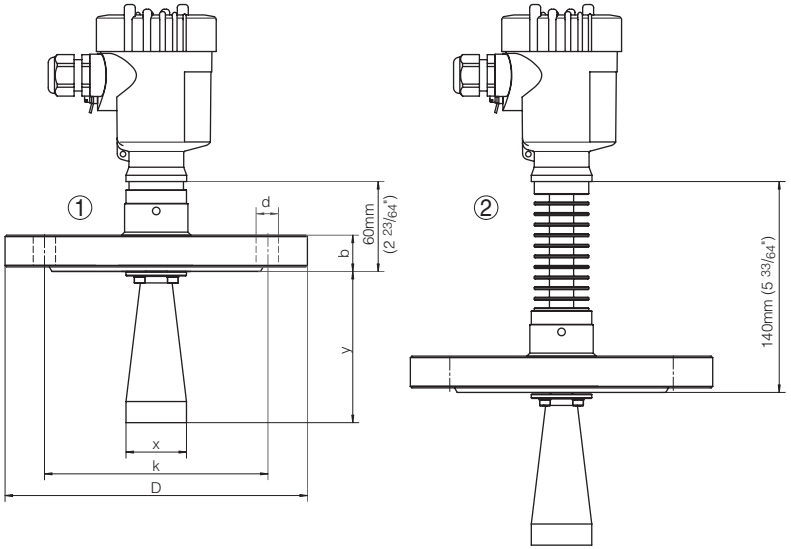


| mm | D | b | k | d | x | y |
|---|---|---|---|---|---|---|
| DN 40 PN 40 | 150 | 18 | 110 | 4xø18 | 40 | 100 |
| DN 50 PN 40 | 165 | 20 | 125 | 4xø18 | 48 | 120 |
| DN 80 PN 40 | 200 | 24 | 160 | 8xø18 | 75 | 216 |
| DN 100 PN 16 | 220 | 20 | 180 | 8xø18 | 95 | 430 |
| DN 150 PN 16 | 285 | 22 | 240 | 8xø22 | 95 | 430 |
| 2" 150 lb | 152,4 | 19,1 | 120,7 | 4xø19,1 | 48 | 120 |
| 3" 150 lb | 190,5 | 23,9 | 152,4 | 4xø19,1 | 75 | 216 |
| 4" 150 lb | 228,6 | 23,9 | 190,5 | 8xø19,1 | 95 | 430 |
| 6" 150 lb | 279,4 | 25,4 | 241,3 | 8xø22,4 | 95 | 430 |

| inch | D | b | k | d | x | y |
|---|---|---|---|---|---|---|
| DN 40PN 40 | 5 29/32" | 45/64" | 4 21/64" | 4xø45/64" | 1 37/64" | 3 15/16" |
| DN 50 PN 40 | 6 1/2" | 25/32" | 4 59/64" | 4xø45/64" | 1 57/64" | 4 23/32" |
| DN 80 PN 40 | 7 7/8" | 15/16" | 6 19/64" | 8xø45/64" | 2 61/64" | 8 1/2" |
| DN 100 PN 16 | 8 21/32" | 25/32" | 7 3/32" | 8xø45/64" | 3 47/64" | 16 59/64" |
| DN 150 PN 16 | 11 7/32" | 55/64" | 9 29/64" | 8xø55/64" | 3 47/64" | 16 59/64" |
| 2" 150 lb | 6" | 3/4" | 4 3/4" | 4xø3/4" | 1 57/64" | 4 23/32" |
| 3" 150 lb | 7 1/2" | 15/16" | 6" | 4xø3/4" | 2 61/64" | 8 1/2" |
| 4" 150 lb | 9" | 15/16" | 7 1/2" | 8xø3/4" | 3 47/64" | 16 59/64" |
| 6" 150 lb | 11" | 1" | 9 1/2" | 8xø7/8" | 3 47/64" | 16 59/64" |

*Fig. 39: VEGAPULS 62 with horn antenna in flange version*
*1 Standard*
*2 with temperature adapter*

28435-EN-050211

## VEGAPULS 62 with parabolic antenna in threaded version

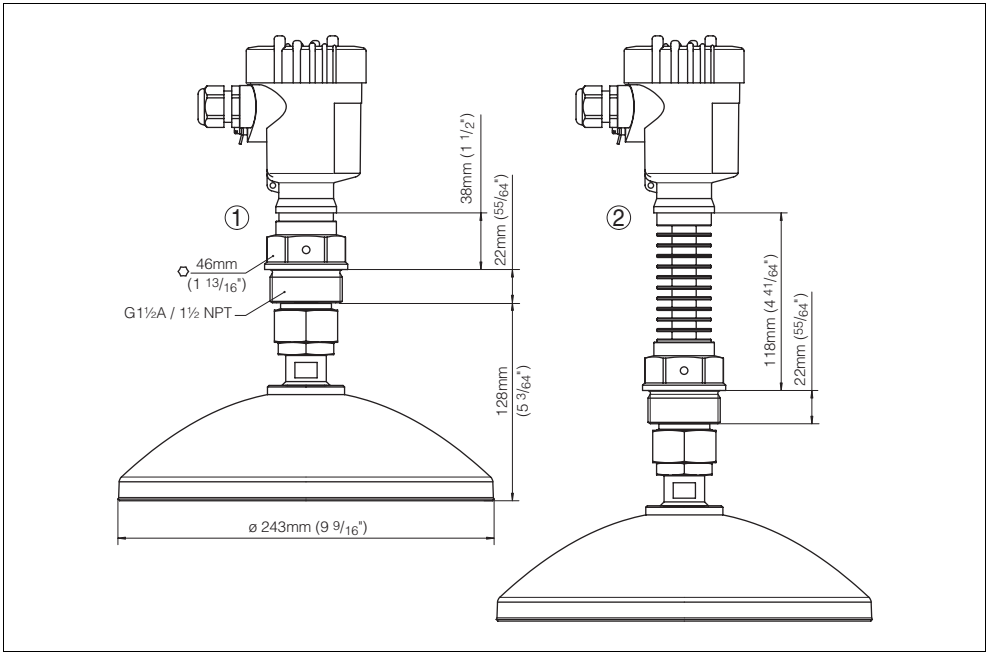


*Fig. 40: VEGAPULS 62 with parabolic antenna in threaded version*
*1 Standard*
*2 with temperature adapter*

28435-EN-050211

# VEGAPULS 62 with parabolic antenna in flange version

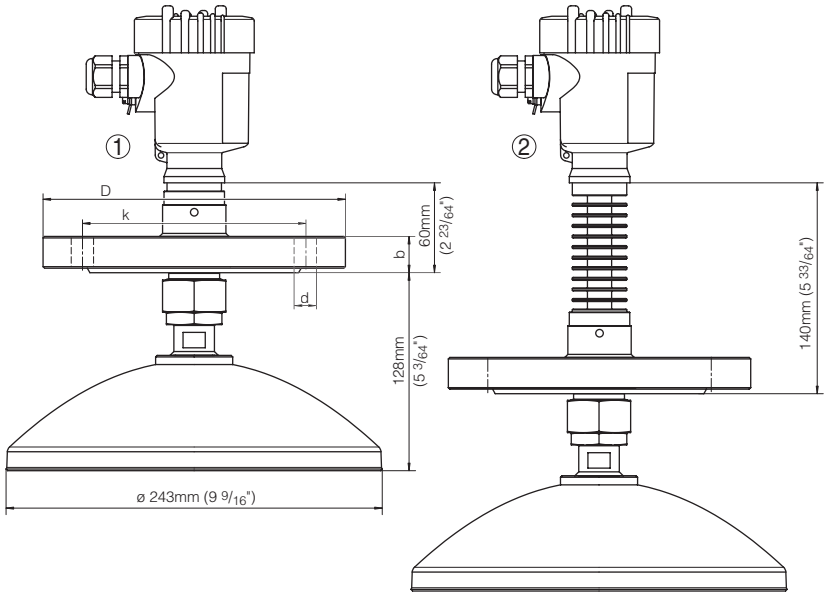


| mm | D | b | k | d |
|---|---|---|---|---|
| DN 40 PN 40 | 150 | 18 | 110 | 4xø18 |
| DN 50 PN 40 | 165 | 20 | 125 | 4xø18 |
| DN 80 PN 40 | 200 | 24 | 160 | 8xø18 |
| DN 100 PN 16 | 220 | 20 | 180 | 8xø18 |
| DN 150 PN 16 | 285 | 22 | 240 | 8xø22 |
| 2" 150 lb | 152,4 | 19,1 | 120,7 | 4xø19,1 |
| 3" 150 lb | 190,5 | 23,9 | 152,4 | 4xø19,1 |
| 4" 150 lb | 228,6 | 23,9 | 190,5 | 8xø19,1 |
| 6" 150 lb | 279,4 | 25,4 | 241,3 | 8xø22,4 |

| inch | D | b | k | d |
|---|---|---|---|---|
| DN 40PN 40 | 5 29/32" | 45/64" | 4 21/64" | 4xø45/64" |
| DN 50 PN 40 | 6 1/2" | 25/32" | 4 59/64" | 4xø45/64" |
| DN 80 PN 40 | 7 7/8" | 15/16" | 6 19/64" | 8xø45/64" |
| DN 100 PN 16 | 8 21/32" | 25/32" | 7 3/32" | 8xø45/64" |
| DN 150 PN 16 | 11 7/32" | 55/64" | 9 29/64" | 8xø55/64" |
| 2" 150 lb | 6" | 3/4" | 4 3/4" | 4xø3/4" |
| 3" 150 lb | 7 1/2" | 15/16" | 6" | 4xø3/4" |
| 4" 150 lb | 9" | 15/16" | 7 1/2" | 8xø3/4" |
| 6" 150 lb | 11" | 1" | 9 1/2" | 8xø7/8" |

*Fig. 41: VEGAPULS 62 with parabolic antenna in flange version*
*1 Standard*
*2 with temperature adapter*

28435-EN-050211

## 9.3 Certificates

### CE declaration of conformity

CE

# Konformitätserklärung

**Declaration of conformity**
**Déclaration de conformité**

**VEGA Grieshaber KG**
**Am Hohenstein 113**
**77761 Schiltach**

erklärt in alleiniger Verantwortung, daß das Produkt / declare under our sole responsibility that our product / déclare sous sa seule responsabilité que le produit

**VEGAPULS 61, VEGAPULS 62, VEGAPULS 63**
**VEGAPULS 65, VEGAPULS 66**
**mit 2Leiter HART-Netzteil**

auf das sich diese Erklärung bezieht, mit den folgenden Normen übereinstimmt / to which this declaration relates is in conformity with the following standards / auquel se réfère cette déclaration est conforme aux normes

EN 61326 : 1997 (Klasse B)
EN 61326 : 1997 / A1 : 1998
EN 61010 – 1 : 2001

gemäß den Bestimmungen der Richtlinien / following the provision of Directives / conformément aux dispositions des Directives

73/23 EWG
89/336 EWG
93/68 EWG

Schiltach, 27.06.2003 ppa. J. Fehrenbach

Josef Fehrenbach
Entwicklungsleitung

*Fig. 42: CE declaration of conformity*

28435-EN-050211

# Manufacturer declaration

**Manufacturer declaration** **no.** 24626

Messrs. VEGA Grieshaber KG
Am Hohenstein 113
77 761 Schiltach

declares that the **Radar Sensor**
**Type VEGAPULS 61, 62, 63, 65, 66 with electronics H (4...20mA HART)**

in accordance with DIN/EN 60079-14/1998 paragraph .5.2.3 item c 1

and when used correctly under the condition that the operator follows the instructions in the documents listed:

- Mounting and operating instructions in the Operating Instructions manual
- Data and instructions of this manufacturer declaration
- Installation regulations

are suitable for use in **Zone 2**

The max. surface temperature increase* during operation is 18K.

With an ambient temperature of 70°C on the housing and a product temperature of 70°C, the max. surface temperature* is 88°C during operation.

Measures to maintain the explosion protection during operation:

- Permissible operating voltage: Umin. = 14V; Umax. = 36V.
- The instrument must be installed and operated in such a way that ignition due to electrostatic charge is not expected (depending on the version, the antenna, process fitting or the housing are made of electrically non-conductive plastic).
- The availability, the perfect quality and the correct position of the seal between the lower part of the housing and the cover must be ensured; the screws for fastening of the cover must be tightened carefully.
- If the instrument is operated with opened cover, the adjustment module PLICSCOM is mounted or its keys are pushed, it must be ensured that no explosive atmosphere is present.
- Make sure that the cable entry is tight and strain-relieved; the outer diameter of the connection cable must be adapted to the cable entry; the pressure screw of the cable entry must be tightened carefully.
- Free openings for cable and cable entries must be covered tightly.
- VEGAPULS must be mounted in such a way that contact of the sensor to the vessel wall can be excluded by taking vessel installations and flow conditions in the vessel into account.
- The surface temperature must not exceed the ignition temperature of the concerned explosive atmosphere.

*Single component in the instrument

This instrument was judged by a person meeting the requirements acc. to DIN/EN 60079-14.

VEGA Grieshaber KG
Schiltach, den 25.03.04

i.V. Fruhauf

*Fig. 43: Manufacturer declaration*

28435-EN-050211

VEGA Grieshaber KG
Am Hohenstein 113
77761 Schiltach
Germany
Phone +49 7836 50-0
Fax +49 7836 50-201
E-mail: info@de.vega.com
**www.vega.com**

All statements concerning scope of delivery, application, practical use and operating conditions of the sensors and processing systems correspond to the information available at the time of printing.