FCC SAR Test Report

Report No.	:	**SA190516E08**
Applicant	:	**XAC AUTOMATION CORP.**
Address	:	**4F, NO. 30, INDUSTRY E. RD. IX, SCIENCE-BASED INDUSTRIAL PARK,HSINCHU,TAIWAN**
Product	:	**Terminal**
FCC ID	:	**MQT-AT170R18U**
Brand	:	**XAC**
Model No.	:	**xCL_AT-170-R-18U**
Standards	:	**FCC 47 CFR Part 2 (2.1093), IEEE C95.1:1992, IEEE Std 1528:2013 KDB 865664 D01 v01r04, KDB 865664 D02 v01r02 KDB 248227 D01 v02r02 , KDB 447498 D01 v06, KDB 941225 D01 v03r01 KDB 941225 D05 v02r05**
Sample Received Date	:	**May 16, 2019**
Date of Testing	:	**Jun. 18, 2019 ~ Jun. 20, 2019**
Lab Address	:	**No. 47-2, 14th Ling, Chia Pau Vil., Lin Kou Dist., New Taipei City, Taiwan, R.O.C.**
Test Location	:	**No. 19, Hwa Ya 2nd Rd, Wen Hwa Vil, Kwei Shan Dist., Taoyuan City 33383, Taiwan (R.O.C)**

CERTIFICATION: The above equipment have been tested by **Bureau Veritas Consumer Products Services (H.K.) Ltd., Taoyuan Branch – Lin Kou Laboratories**, and found compliance with the requirement of the above standards. The test record, data evaluation & Equipment Under Test (EUT) configurations represented herein are true and accurate accounts of the measurements of the sample's SAR characteristics under the conditions specified in this report. It should not be reproduced except in full, without the written approval of our laboratory. The client should not use it to claim product certification, approval, or endorsement by TAF or any government agencies.

Prepared By : Lena Wang

Lena Wang / Specialist

Approved By : Gordon Lin

Gordon Lin / Assistant Manager

FCC Accredited No.: TW0003

This report is for your exclusive use. Any copying or replication of this report to or for any other person or entity, or use of our name or trademark, is permitted only with our prior written permission. This report sets forth our findings solely with respect to the test samples identified herein. The results set forth in this report are not indicative or representative of the quality or characteristics of the lot from which a test sample was taken or any similar or identical product unless specifically and expressly noted. Our report includes all of the tests requested by you and the results thereof based upon the information that you provided to us. You have 60 days from date of issuance of this report to notify us of any material error or omission caused by our negligence, provided, however, that such notice shall be in writing and shall specifically address the issue you wish to raise. A failure to raise such issue within the prescribed time shall constitute your unqualified acceptance of the completeness of this report, the tests conducted and the correctness of the report contents. Unless specific mention, the uncertainty of measurement has been explicitly taken into account to declare the compliance or non-compliance to the specification.

Table of Contents

Release Control Record **3**
1. Summary of Maximum SAR Value **4**
2. Description of Equipment Under Test **5**
3. SAR Measurement System **6**
3.1 Definition of Specific Absorption Rate (SAR) 6
3.2 SPEAG DASY52 System 6
3.2.1 Robot 7
3.2.2 Probes 8
3.2.3 Data Acquisition Electronics (DAE) 8
3.2.4 Phantoms 9
3.2.5 Device Holder 10
3.2.6 System Validation Dipoles 10
3.2.7 Tissue Simulating Liquids 11
3.3 SAR System Verification 13
3.4 SAR Measurement Procedure 14
3.4.1 Area & Zoom Scan Procedure 14
3.4.2 Volume Scan Procedure 14
3.4.3 Power Drift Monitoring 15
3.4.4 Spatial Peak SAR Evaluation 15
3.4.5 SAR Averaged Methods 15
4. SAR Measurement Evaluation **16**
4.1 EUT Configuration and Setting 16
4.2 EUT Testing Position 22
4.2.1 Extremity Exposure Conditions 22
4.3 Tissue Verification 22
4.4 System Validation 22
4.5 System Verification 23
4.6 Maximum Output Power 24
4.6.1 Maximum Target Conducted Power 24
4.6.2 Measured Conducted Power Result 25
4.7 SAR Testing Results 30
4.7.1 SAR Test Reduction Considerations 30
4.7.2 SAR Results for Extremity Exposure Condition (Test Separation Distance is 0 mm) 32
6.7.1 SAR Measurement Variability 34
6.7.2 Simultaneous Multi-band Transmission Evaluation 35
5. Calibration of Test Equipment **37**
6. Measurement Uncertainty **38**
7. Information of the Testing Laboratories **39**

Appendix A. SAR Plots of System Verification
Appendix B. SAR Plots of SAR Measurement
Appendix C. Calibration Certificate for Probe and Dipole
Appendix D. Photographs of EUT and Setup

Release Control Record

Report No.	Reason for Change	Date Issued
SA190516E08	Initial release	Jun. 25, 2019

1. Summary of Maximum SAR Value

Equipment Class	Mode	Highest SAR-10g Extremity Tested at 0 mm (W/kg)
PCB	WCDMA II	1.87
	WCDMA V	0.74
	LTE 2	2.04
	LTE 4	2.14
	LTE 12	0.18
DTS	2.4G WLAN	0.23
NII	5.2G WLAN	0.26
	5.3G WLAN	0.59
	5.6G WLAN	0.53
	5.8G WLAN	0.00
DSS	Bluetooth	N/A
DXX	NFC	N/A

Highest Simultaneous Transmission SAR	Highest SAR-10g Extremity Tested at 0 mm (W/kg)
	2.14

Note:

1. The SAR criteria **(Head & Body: SAR-1g 1.6 W/kg, and Extremity: SAR-10g 4.0 W/kg)** for general population / uncontrolled exposure is specified in FCC 47 CFR part 2 (2.1093) and ANSI/IEEE C95.1-1992.

2. Description of Equipment Under Test

EUT Type	Terminal
FCC ID	MQT-AT170R18U
Brand Name	XAC
Model Name	xCL_AT-170-R-18U
Tx Frequency Bands (Unit: MHz)	WCDMA Band II : 1852.4 ~ 1907.6 WCDMA Band V : 826.4 ~ 846.6 LTE Band 2 : 1850.7 ~ 1909.3 (BW: 1.4M, 3M, 5M, 10M, 15M, 20M) LTE Band 4 : 1710.7 ~ 1754.3 (BW: 1.4M, 3M, 5M, 10M, 15M, 20M) LTE Band 12 : 699.7 ~ 715.3 (BW: 1.4M, 3M, 5M, 10M) WLAN : 2412 ~ 2462, 5180 ~ 5240, 5260 ~ 5320, 5500 ~ 5700, 5745 ~ 5825 Bluetooth : 2402 ~ 2480 NFC : 13.56
Uplink Modulations	WCDMA : QPSK LTE : QPSK, 16QAM 802.11b : DSSS 802.11a/g/n : OFDM Bluetooth : GFSK NFC : ASK
Maximum Tune-up Conducted Power (Unit: dBm)	Please refer to section 4.6.1 of this report
Antenna Type	FPCB Antenna
EUT Stage	Engineering sample

Note:

1. The above EUT information is declared by manufacturer and for more detailed features description please refers to the manufacturer's specifications or User's Manual.

List of Accessory:

Battery (Option)	**Brand Name**	Shenzhen Rishengzhi Electronics Technology Co., Ltd.
	Model Name	J601
	Power Rating	3.8Vdc, 5200mAh
	Type	Li-ion

3. SAR Measurement System

3.1 Definition of Specific Absorption Rate (SAR)

SAR is related to the rate at which energy is absorbed per unit mass in an object exposed to a radio field. The SAR distribution in a biological body is complicated and is usually carried out by experimental techniques or numerical modeling. The standard recommends limits for two tiers of groups, occupational/controlled and general population/uncontrolled, based on a person's awareness and ability to exercise control over his or her exposure. In general, occupational/controlled exposure limits are higher than the limits for general population/uncontrolled.

The SAR definition is the time derivative (rate) of the incremental energy (dW) absorbed by (dissipated in) an incremental mass (dm) contained in a volume element (dv) of a given density (ρ). The equation description is as below:

$$\mathbf{SAR} = \frac{\mathbf{d}}{\mathbf{dt}}\left(\frac{\mathbf{dW}}{\mathbf{dm}}\right) = \frac{\mathbf{d}}{\mathbf{dt}}\left(\frac{\mathbf{dW}}{\boldsymbol{\rho}\mathbf{dv}}\right)$$

SAR is expressed in units of Watts per kilogram (W/kg)

SAR measurement can be related to the electrical field in the tissue by

$$\mathbf{SAR} = \frac{\boldsymbol{\sigma}|\mathbf{E}|^2}{\boldsymbol{\rho}}$$

Where: σ is the conductivity of the tissue, ρ is the mass density of the tissue and E is the RMS electrical field strength.

3.2 SPEAG DASY52 System

DASY52 system consists of high precision robot, probe alignment sensor, phantom, robot controller, controlled measurement server and near-field probe. The robot includes six axes that can move to the precision position of the DASY52 software defined. The DASY52 software can define the area that is detected by the probe. The robot is connected to controlled box. Controlled measurement server is connected to the controlled robot box. The DAE includes amplifier, signal multiplexing, AD converter, offset measurement and surface detection. It is connected to the Electro-optical coupler (ECO). The ECO performs the conversion form the optical into digital electric signal of the DAE and transfers data to the PC.

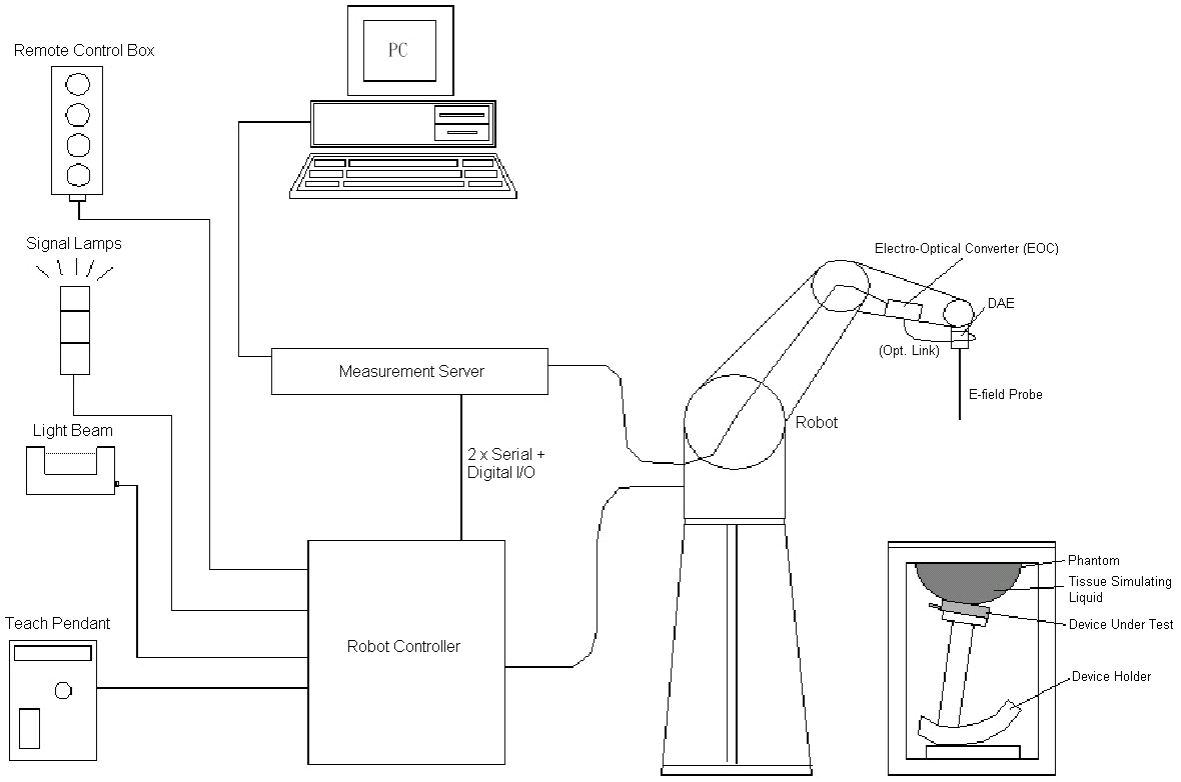

Fig-3.1 SPEAG DASY52 System Setup

3.2.1 Robot

The DASY52 systems use the high precision robots from Stäubli SA (France). For the 6-axis controller system, the robot controller version of CS8c from Stäubli is used. The Stäubli robot series have many features that are important for our application:

- High precision (repeatability ±0.035 mm)
- High reliability (industrial design)
- Jerk-free straight movements
- Low ELF interference (the closed metallic construction shields against motor control fields)

Fig-3.2 SPEAG DASY52 System

3.2.2 Probes

The SAR measurement is conducted with the dosimetric probe. The probe is specially designed and calibrated for use in liquid with high permittivity. The dosimetric probe has special calibration in liquid at different frequency.

Model	EX3DV4	
Construction	Symmetrical design with triangular core. Built-in shielding against static charges. PEEK enclosure material (resistant to organic solvents, e.g., DGBE).	
Frequency	10 MHz to 6 GHz Linearity: ± 0.2 dB	
Directivity	± 0.3 dB in HSL (rotation around probe axis) ± 0.5 dB in tissue material (rotation normal to probe axis)	
Dynamic Range	10 µW/g to 100 mW/g Linearity: ± 0.2 dB (noise: typically < 1 µW/g)	
Dimensions	Overall length: 337 mm (Tip: 20 mm) Tip diameter: 2.5 mm (Body: 12 mm) Typical distance from probe tip to dipole centers: 1 mm	

Model	ES3DV3	
Construction	Symmetrical design with triangular core. Interleaved sensors. Built-in shielding against static charges. PEEK enclosure material (resistant to organic solvents, e.g., DGBE).	
Frequency	10 MHz to 4 GHz Linearity: ± 0.2 dB	
Directivity	± 0.2 dB in HSL (rotation around probe axis) ± 0.3 dB in tissue material (rotation normal to probe axis)	
Dynamic Range	5 µW/g to 100 mW/g Linearity: ± 0.2 dB	
Dimensions	Overall length: 337 mm (Tip: 20 mm) Tip diameter: 3.9 mm (Body: 12 mm) Distance from probe tip to dipole centers: 2.0 mm	

Model	ET3DV6	
Construction	Symmetrical design with triangular core Built-in optical fiber for surface detection system. Built-in shielding against static charges. PEEK enclosure material (resistant to organic solvents, e.g., DGBE)	
Frequency	10 MHz to 2.3 GHz; Linearity: ± 0.2 dB	
Directivity	± 0.2 dB in TSL (rotation around probe axis) ± 0.4 dB in TSL (rotation normal to probe axis)	
Dynamic Range	5 µW/g to 100 mW/g; Linearity: ± 0.2 dB	
Dimensions	Overall length: 337 mm (Tip: 16 mm) Tip diameter: 6.8 mm (Body: 12 mm) Distance from probe tip to dipole centers: 2.7 mm	

3.2.3 Data Acquisition Electronics (DAE)

Model	DAE3, DAE4	
Construction	Signal amplifier, multiplexer, A/D converter and control logic. Serial optical link for communication with DASY embedded system (fully remote controlled). Two step probe touch detector for mechanical surface detection and emergency robot stop.	
Measurement Range	-100 to +300 mV (16 bit resolution and two range settings: 4mV, 400mV)	
Input Offset Voltage	< 5µV (with auto zero)	
Input Bias Current	< 50 fA	
Dimensions	60 x 60 x 68 mm	

3.2.4 Phantoms

Model	Twin SAM	
Construction	The shell corresponds to the specifications of the Specific Anthropomorphic Mannequin (SAM) phantom defined in IEEE 1528 and IEC 62209-1. It enables the dosimetric evaluation of left and right hand phone usage as well as body mounted usage at the flat phantom region. A cover prevents evaporation of the liquid. Reference markings on the phantom allow the complete setup of all predefined phantom positions and measurement grids by teaching three points with the robot.	
Material	Vinylester, glass fiber reinforced (VE-GF)	
Shell Thickness	2 ± 0.2 mm (6 ± 0.2 mm at ear point)	
Dimensions	Length: 1000 mm Width: 500 mm Height: adjustable feet	
Filling Volume	approx. 25 liters	

Model	ELI	
Construction	Phantom for compliance testing of handheld and body-mounted wireless devices in the frequency range of 30 MHz to 6 GHz. ELI is fully compatible with the IEC 62209-2 standard and all known tissue simulating liquids. ELI has been optimized regarding its performance and can be integrated into our standard phantom tables. A cover prevents evaporation of the liquid. Reference markings on the phantom allow installation of the complete setup, including all predefined phantom positions and measurement grids, by teaching three points. The phantom is compatible with all SPEAG dosimetric probes and dipoles.	
Material	Vinylester, glass fiber reinforced (VE-GF)	
Shell Thickness	2.0 ± 0.2 mm (bottom plate)	
Dimensions	Major axis: 600 mm Minor axis: 400 mm	
Filling Volume	approx. 30 liters	

3.2.5 Device Holder

Model	Mounting Device	
Construction	In combination with the Twin SAM Phantom or ELI4, the Mounting Device enables the rotation of the mounted transmitter device in spherical coordinates. Rotation point is the ear opening point. Transmitter devices can be easily and accurately positioned according to IEC, IEEE, FCC or other specifications. The device holder can be locked for positioning at different phantom sections (left head, right head, flat).	
Material	POM	

Model	Laptop Extensions Kit	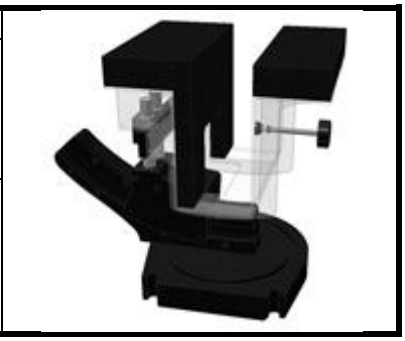
Construction	Simple but effective and easy-to-use extension for Mounting Device that facilitates the testing of larger devices according to IEC 62209-2 (e.g., laptops, cameras, etc.). It is lightweight and fits easily on the upper part of the Mounting Device in place of the phone positioner.	
Material	POM, Acrylic glass, Foam	

3.2.6 System Validation Dipoles

Model	D-Serial	
Construction	Symmetrical dipole with l/4 balun. Enables measurement of feed point impedance with NWA. Matched for use near flat phantoms filled with tissue simulating solutions.	
Frequency	750 MHz to 5800 MHz	
Return Loss	> 20 dB	
Power Capability	> 100 W (f < 1GHz), > 40 W (f > 1GHz)	

3.2.7 Tissue Simulating Liquids

For SAR measurement of the field distribution inside the phantom, the phantom must be filled with homogeneous tissue simulating liquid to a depth of at least 15 cm. For head SAR testing, the liquid height from the ear reference point (ERP) of the phantom to the liquid top surface is larger than 15 cm. For body SAR testing, the liquid height from the center of the flat phantom to the liquid top surface is larger than 15 cm. The nominal dielectric values of the tissue simulating liquids in the phantom and the tolerance of 5% are listed in Table-3.1.

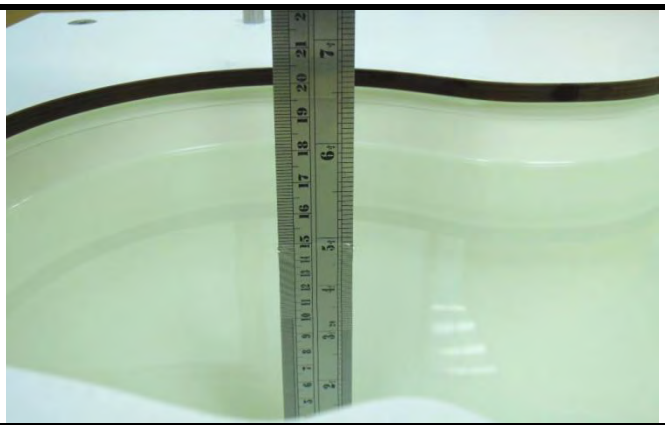

Photo of Liquid Height for Head Position

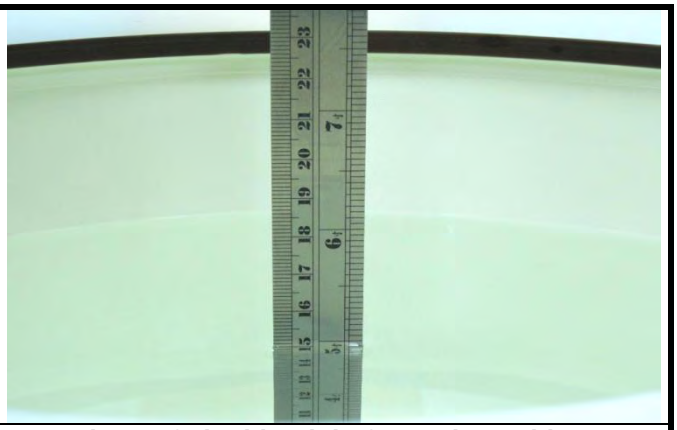

Photo of Liquid Height for Body Position

The dielectric properties of the head tissue simulating liquids are defined in IEEE 1528, and KDB 865664 D01 Appendix A. For the body tissue simulating liquids, the dielectric properties are defined in KDB 865664 D01 Appendix A. The dielectric properties of the tissue simulating liquids were verified prior to the SAR evaluation using a dielectric assessment kit and a network analyzer.

Table-3.1 Targets of Tissue Simulating Liquid

Frequency (MHz)	Target Permittivity	Range of ±5%	Target Conductivity	Range of ±5%
For Head				
750	41.9	39.8 ~ 44.0	0.89	0.85 ~ 0.93
835	41.5	39.4 ~ 43.6	0.90	0.86 ~ 0.95
900	41.5	39.4 ~ 43.6	0.97	0.92 ~ 1.02
1450	40.5	38.5 ~ 42.5	1.20	1.14 ~ 1.26
1640	40.3	38.3 ~ 42.3	1.29	1.23 ~ 1.35
1750	40.1	38.1 ~ 42.1	1.37	1.30 ~ 1.44
1800	40.0	38.0 ~ 42.0	1.40	1.33 ~ 1.47
1900	40.0	38.0 ~ 42.0	1.40	1.33 ~ 1.47
2000	40.0	38.0 ~ 42.0	1.40	1.33 ~ 1.47
2300	39.5	37.5 ~ 41.5	1.67	1.59 ~ 1.75
2450	39.2	37.2 ~ 41.2	1.80	1.71 ~ 1.89
2600	39.0	37.1 ~ 41.0	1.96	1.86 ~ 2.06
3500	37.9	36.0 ~ 39.8	2.91	2.76 ~ 3.06
5200	36.0	34.2 ~ 37.8	4.66	4.43 ~ 4.89
5300	35.9	34.1 ~ 37.7	4.76	4.52 ~ 5.00
5500	35.6	33.8 ~ 37.4	4.96	4.71 ~ 5.21
5600	35.5	33.7 ~ 37.3	5.07	4.82 ~ 5.32
5800	35.3	33.5 ~ 37.1	5.27	5.01 ~ 5.53

The following table gives the recipes for tissue simulating liquids.

Table-3.2 Recipes of Tissue Simulating Liquid

Tissue Type	Bactericide	DGBE	HEC	NaCl	Sucrose	Triton X-100	Water	Diethylene Glycol Mono-hexylether
H750	0.2	-	0.2	1.5	56.0	-	42.1	-
H835	0.2	-	0.2	1.5	57.0	-	41.1	-
H900	0.2	-	0.2	1.4	58.0	-	40.2	-
H1450	-	43.3	-	0.6	-	-	56.1	-
H1640	-	45.8	-	0.5	-	-	53.7	-
H1750	-	47.0	-	0.4	-	-	52.6	-
H1800	-	44.5	-	0.3	-	-	55.2	-
H1900	-	44.5	-	0.2	-	-	55.3	-
H2000	-	44.5	-	0.1	-	-	55.4	-
H2300	-	44.9	-	0.1	-	-	55.0	-
H2450	-	45.0	-	0.1	-	-	54.9	-
H2600	-	45.1	-	0.1	-	-	54.8	-
H3500	-	8.0	-	0.2	-	20.0	71.8	-
H5G	-	-	-	-	-	17.2	65.5	17.3
B750	0.2	-	0.2	0.8	48.8	-	50.0	-
B835	0.2	-	0.2	0.9	48.5	-	50.2	-
B900	0.2	-	0.2	0.9	48.2	-	50.5	-
B1450	-	34.0	-	0.3	-	-	65.7	-
B1640	-	32.5	-	0.3	-	-	67.2	-
B1750	-	31.0	-	0.2	-	-	68.8	-
B1800	-	29.5	-	0.4	-	-	70.1	-
B1900	-	29.5	-	0.3	-	-	70.2	-
B2000	-	30.0	-	0.2	-	-	69.8	-
B2300	-	31.0	-	0.1	-	-	68.9	-
B2450	-	31.4	-	0.1	-	-	68.5	-
B2600	-	31.8	-	0.1	-	-	68.1	-
B3500	-	28.8	-	0.1	-	-	71.1	-
B5G	-	-	-	-	-	10.7	78.6	10.7

3.3 SAR System Verification

The system check verifies that the system operates within its specifications. It is performed daily or before every SAR measurement. The system check uses normal SAR measurements in the flat section of the phantom with a matched dipole at a specified distance. The system verification setup is shown as below.

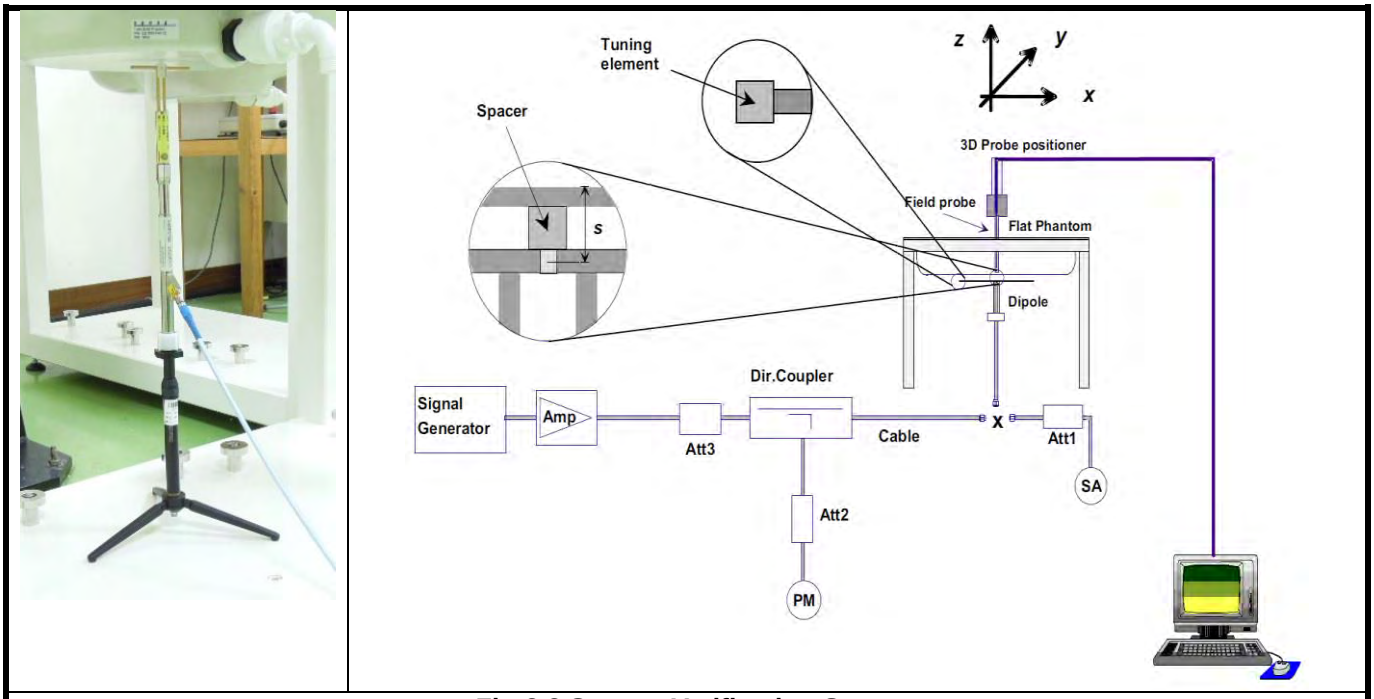

Fig-3.3 System Verification Setup

The validation dipole is placed beneath the flat phantom with the specific spacer in place. The distance spacer is touch the phantom surface with a light pressure at the reference marking and be oriented parallel to the long side of the phantom. The spectrum analyzer measures the forward power at the location of the system check dipole connector. The signal generator is adjusted for the desired forward power (250 mW is used for 700 MHz to 3 GHz, 100 mW is used for 3.5 GHz to 6 GHz) at the dipole connector and the power meter is read at that level. After connecting the cable to the dipole, the signal generator is readjusted for the same reading at power meter.

After system check testing, the SAR result will be normalized to 1W forward input power and compared with the reference SAR value derived from validation dipole certificate report. The deviation of system check should be within 10 %.

3.4 SAR Measurement Procedure

According to the SAR test standard, the recommended procedure for assessing the peak spatial-average SAR value consists of the following steps:

(a) Power reference measurement
(b) Area scan
(c) Zoom scan
(d) Power drift measurement

The SAR measurement procedures for each of test conditions are as follows:

(a) Make EUT to transmit maximum output power
(b) Measure conducted output power through RF cable
(c) Place the EUT in the specific position of phantom
(d) Perform SAR testing steps on the DASY system
(e) Record the SAR value

3.4.1 Area & Zoom Scan Procedure

First Area Scan is used to locate the approximate location(s) of the local peak SAR value(s). The measurement grid within an Area Scan is defined by the grid extent, grid step size and grid offset. Next, in order to determine the EM field distribution in a three-dimensional spatial extension, Zoom Scan is required. The Zoom Scan is performed around the highest E-field value to determine the averaged SAR-distribution over 10 g. According to KDB 865664 D01, the resolution for Area and Zoom scan is specified in the table below.

Items	<= 2 GHz	2-3 GHz	3-4 GHz	4-5 GHz	5-6 GHz
Area Scan (Δx, Δy)	<= 15 mm	<= 12 mm	<= 12 mm	<= 10 mm	<= 10 mm
Zoom Scan (Δx, Δy)	<= 8 mm	<= 5 mm	<= 5 mm	<= 4 mm	<= 4 mm
Zoom Scan (Δz)	<= 5 mm	<= 5 mm	<= 4 mm	<= 3 mm	<= 2 mm
Zoom Scan Volume	>= 30 mm	>= 30 mm	>= 28 mm	>= 25 mm	>= 22 mm

Note:

When zoom scan is required and report SAR is <= 1.4 W/kg, the zoom scan resolution of Δx / Δy (2-3GHz: <= 8 mm, 3-4GHz: <= 7 mm, 4-6GHz: <= 5 mm) may be applied.

3.4.2 Volume Scan Procedure

The volume scan is used for assess overlapping SAR distributions for antennas transmitting in different frequency bands. It is equivalent to an oversized zoom scan used in standalone measurements. The measurement volume will be used to enclose all the simultaneous transmitting antennas. For antennas transmitting simultaneously in different frequency bands, the volume scan is measured separately in each frequency band. In order to sum correctly to compute the 1g aggregate SAR, the EUT remain in the same test position for all measurements and all volume scan use the same spatial resolution and grid spacing. When all volume scan were completed, the software, SEMCAD postprocessor can combine and subsequently superpose these measurement data to calculating the multiband SAR.

3.4.3 Power Drift Monitoring

All SAR testing is under the EUT install full charged battery and transmit maximum output power. In DASY measurement software, the power reference measurement and power drift measurement procedures are used for monitoring the power drift of EUT during SAR test. Both these procedures measure the field at a specified reference position before and after the SAR testing. The software will calculate the field difference in dB. If the power drift more than 5%, the SAR will be retested.

3.4.4 Spatial Peak SAR Evaluation

The procedure for spatial peak SAR evaluation has been implemented according to the test standard. It can be conducted for 1g and 10g, as well as for user-specific masses. The DASY software includes all numerical procedures necessary to evaluate the spatial peak SAR value.

The base for the evaluation is a "cube" measurement. The measured volume must include the 1g and 10g cubes with the highest averaged SAR values. For that purpose, the center of the measured volume is aligned to the interpolated peak SAR value of a previously performed area scan.

The entire evaluation of the spatial peak values is performed within the post-processing engine (SEMCAD). The system always gives the maximum values for the 1g and 10g cubes. The algorithm to find the cube with highest averaged SAR is divided into the following stages:

(a) Extraction of the measured data (grid and values) from the Zoom Scan
(b) Calculation of the SAR value at every measurement point based on all stored data (A/D values and measurement parameters)
(c) Generation of a high-resolution mesh within the measured volume
(d) Interpolation of all measured values form the measurement grid to the high-resolution grid
(e) Extrapolation of the entire 3-D field distribution to the phantom surface over the distance from sensor to surface
(f) Calculation of the averaged SAR within masses of 1g and 10g

3.4.5 SAR Averaged Methods

In DASY, the interpolation and extrapolation are both based on the modified Quadratic Shepard’s method. The interpolation scheme combines a least-square fitted function method and a weighted average method which are the two basic types of computational interpolation and approximation.

Extrapolation routines are used to obtain SAR values between the lowest measurement points and the inner phantom surface. The extrapolation distance is determined by the surface detection distance and the probe sensor offset. The uncertainty increases with the extrapolation distance. To keep the uncertainty within 1% for the 1 g and 10 g cubes, the extrapolation distance should not be larger than 5 mm.

4. SAR Measurement Evaluation

4.1 EUT Configuration and Setting

<Connections between EUT and System Simulator>

For WWAN SAR testing, the EUT was linked and controlled by base station emulator. Communication between the EUT and the emulator was established by air link. The distance between the EUT and the communicating antenna of the emulator is larger than 50 cm and the output power radiated from the emulator antenna is at least 30 dB smaller than the output power of EUT. The EUT was set from the emulator to radiate maximum output power during SAR testing.

<Considerations Related to WCDMA for Setup and Testing>

Handsets with Release 5 HSDPA

The 3G SAR test reduction procedure is applied to HSDPA body-worn configurations with 12.2 kbps RMC as the primary mode. Otherwise, SAR is measured for HSDPA using the HSDPA body SAR procedures in the “Release 5 HSDPA Data Devices”, for the highest reported SAR body-worn exposure configuration in 12.2 kbps RMC. Handsets with both HSDPA and HSUPA are tested according to Release 6 HSPA test procedures.

Handsets with Release 6 HSUPA

The 3G SAR test reduction procedure is applied to HSPA (HSUPA/HSDPA with RMC) body-worn configurations with 12.2 kbps RMC as the primary mode. Otherwise, SAR is measured for HSPA using the HSPA body SAR procedures in the “Release 6 HSPA Data Devices”, for the highest reported body-worn exposure SAR configuration in 12.2 kbps RMC. When VOIP is applicable for next to the ear head exposure in HSPA, the 3G SAR test reduction procedure is applied to HSPA with 12.2 kbps RMC as the primary mode; otherwise, the same HSPA configuration used for body-worn measurements is tested for next to the ear head exposure.

Release 5 HSDPA Data Devices

The 3G SAR test reduction procedure is applied to body SAR with 12.2 kbps RMC as the primary mode. Otherwise, body SAR for HSDPA is measured using an FRC with H-Set 1 in Sub-test 1 and a 12.2 kbps RMC configured in Test Loop Mode 1, for the highest reported SAR configuration in 12.2 kbps RMC without HSDPA. HSDPA is configured according to the applicable UE category of a test device. The number of HS-DSCH / HS-PDSCHs, HARQ processes, minimum inter-TTI interval, transport block sizes and RV coding sequence are defined by the H-set. To maintain a consistent test configuration and stable transmission conditions, QPSK is used in the H-set for SAR testing. HS-DPCCH should be configured with a CQI feedback cycle of 4 ms and a CQI repetition factor of 2 to maintain a constant rate of active CQI slots. DPCCH and DPDCH gain factors (β_c, β_d), and HS-DPCCH power offset parameters (Δ_{ACK}, Δ_{NACK}, Δ_{CQI}) are set according to values indicated in below. The CQI value is determined by the UE category, transport block size, number of HS-PDSCHs and modulation used in the H-set.

Sub-test	β_c	β_d	β_d (SF)	β_c/β_d	β_{HS} (1)(2)	CM (3) (dB)	MPR (3) (dB)
1	2/15	15/15	64	2/15	4/15	0.0	0.0
2	12/15 (4)	15/15 (4)	64	12/15 (4)	24/15	1.0	0.0
3	15/15	8/15	64	15/8	30/15	1.5	0.5
4	15/15	4/15	64	15/4	30/15	1.5	0.5

Note 1: Δ_{ACK}, Δ_{NACK} and Δ_{CQI} = 30/15 with β_{HS} = 30/15 * β_c.
Note 2: For the HS-DPCCH power mask requirement test in clause 5.2C, 5.7A, and the Error Vector Magnitude (EVM) with HS-DPCCH test in clause 5.13.1A, and HSDPA EVM with phase discontinuity in clause 5.13.1AA, Δ_{ACK} and Δ_{NACK} = 30/15 with β_{HS} = 30/15 * β_c, and Δ_{CQI} = 24/15 with β_{HS} = 24/15 * β_c.
Note 3: CM = 1 for β_c/β_d = 12/15, β_{HS}/β_c = 24/15. For all other combinations of DPDCH, DPCCH and HS-DPCCH the MPR is based on the relative CM difference. This is applicable for only UEs that support HSDPA in release 6 and later releases.
Note 4: For subtest 2 the β_c/β_d ratio of 12/15 for the TFC during the measurement period (TF1, TF0) is achieved by setting the signalled gain factors for the reference TFC (TF1, TF1) to β_c = 11/15 and β_d = 15/15.

Release 6 HSUPA Data Devices

The 3G SAR test reduction procedure is applied to body SAR with 12.2 kbps RMC as the primary mode. Otherwise, body SAR for HSPA is measured with E-DCH Sub-test 5, using H-Set 1 and QPSK for FRC and a 12.2 kbps RMC configured in Test Loop Mode 1 and power control algorithm 2, according to the highest reported body SAR configuration in 12.2 kbps RMC without HSPA. When VOIP applies to head exposure, the 3G SAR test reduction procedure is applied with 12.2 kbps RMC as the primary mode. Otherwise, the same HSPA configuration used for body SAR measurements are applied to head exposure testing. Due to inner loop power control requirements in HSPA, a communication test set is required for output power and SAR tests. The 12.2 kbps RMC, FRC H-set 1 and E-DCH configurations for HSPA are configured according to the β values indicated in below.

Sub-test	β_c	β_d	β_d (SF)	β_c / β_d	β_{HS} (1)	β_{ec}	β_{ed} (4)(5)	β_{ed} (SF)	β_{ed} (Codes)	CM (2) (dB)	MPR (2)(6) (dB)	AG (5) Index	E-TFCI
1	11/15 (3)	15/15 (3)	64	11/15 (3)	22/15	209/225	1309/225	4	1	1.0	0.0	20	75
2	6/15	15/15	64	6/15	12/15	12/15	94/75	4	1	3.0	2.0	12	67
3	15/15	9/15	64	15/9	30/15	30/15	$\beta_{ed}1$: 47/15 $\beta_{ed}2$: 47/15	4 4	2	2.0	1.0	15	92
4	2/15	15/15	64	2/15	4/15	2/15	56/75	4	1	3.0	2.0	17	71
5	15/15	0	-	-	5/15	5/15	47/15	4	1	1.0	0.0	12	67

Note 1: For sub-test 1 to 4, Δ_{ACK}, Δ_{NACK} and Δ_{CQI} = 30/15 with β_{HS} = 30/15 * β_c. For sub-test 5, Δ_{ACK}, Δ_{NACK} and Δ_{CQI} = 5/15 with β_{HS} = 5/15 * β_c.
Note 2: CM = 1 for β_c/β_d = 12/15, β_{HS}/β_c = 24/15. For all other combinations of DPDCH, DPCCH, HS-DPCCH, E-DPDCH and E-DPCCH the MPR is based on the relative CM difference.
Note 3: For subtest 1 the β_c/β_d ratio of 11/15 for the TFC during the measurement period (TF1, TF0) is achieved by setting the signalled gain factors for the reference TFC (TF1, TF1) to β_c = 10/15 and β_d = 15/15.
Note 4: In case of testing by UE using E-DPDCH Physical Layer category 1, Sub-test 3 is omitted according to TS25.306 Table 5.1g.
Note 5: β_{ed} can not be set directly; it is set by Absolute Grant Value.
Note 6: For subtests 2, 3 and 4, UE may perform E-DPDCH power scaling at max power which could results in slightly smaller MPR values.

DC-HSDPA SAR Guidance

The 3G SAR test reduction procedure is applied to DC-HSDPA with 12.2 kbps RMC as the primary mode. Otherwise, when SAR is required for Rel. 5 HSDPA, SAR is required for Rel. 8 DC-HSDPA. Power is measured for DC-HSDPA according to the H-Set 12, FRC configuration in Table C.8.1.12 of 3GPP TS 34.121-1 to determine SAR test reduction. A primary and a secondary serving HS-DSCH Cell are required to perform the power measurement and for the results to be acceptable.

<Considerations Related to LTE for Setup and Testing>

This device contains LTE transmitter which follows 3GPP standards, is category 3, supports both QPSK and QAM modulations, and supported LTE band and channel bandwidth is listed in below. The output power was tested per 3GPP TS 36.521-1 maximum transmit procedures for both QPSK and QAM modulation. The results please refer to section 4.6 of this report.

EUT Supported LTE Band and Channel Bandwidth						
LTE Band	BW 1.4 MHz	BW 3 MHz	BW 5 MHz	BW 10 MHz	BW 15 MHz	BW 20 MHz
2	V	V	V	V	V	V
4	V	V	V	V	V	V
12	V	V	V	V		

The LTE maximum power reduction (MPR) in accordance with 3GPP TS 36.101 is active all times during LTE operation. The allowed MPR for the maximum output power is specified in below.

Modulation	Channel Bandwidth / RB Configurations						LTE MPR Setting (dB)
	BW 1.4 MHz	BW 3 MHz	BW 5 MHz	BW 10 MHz	BW 15 MHz	BW 20 MHz	
QPSK	> 5	> 4	> 8	> 12	> 16	> 18	1
16QAM	<= 5	<= 4	<= 8	<= 12	<= 16	<= 18	1
16QAM	> 5	> 4	> 8	> 12	> 16	> 18	2

Note: MPR is according to the standard and implemented in the circuit (mandatory).

In addition, the device is compliant with additional maximum power reduction (A-MPR) requirements defined in 3GPP TS 36.101 section 6.2.4 that was disabled for all FCC compliance testing.

During LTE SAR testing, the related parameters of operating band, channel bandwidth, uplink channel number, modulation type, and RB was set in base station simulator. When the EUT has registered and communicated to base station simulator, the simulator set to make EUT transmitting the maximum radiated power.

<Considerations Related to WLAN for Setup and Testing>

In general, various vendor specific external test software and chipset based internal test modes are typically used for SAR measurement. These chipset based test mode utilities are generally hardware and manufacturer dependent, and often include substantial flexibility to reconfigure or reprogram a device. A Wi-Fi device must be configured to transmit continuously at the required data rate, channel bandwidth and signal modulation, using the highest transmission duty factor supported by the test mode tools for SAR measurement. The test frequencies established using test mode must correspond to the actual channel frequencies. When 802.11 frame gaps are accounted for in the transmission, a maximum transmission duty factor of 92 - 96% is typically achievable in most test mode configurations. A minimum transmission duty factor of 85% is required to avoid certain hardware and device implementation issues related to wide range SAR scaling. In addition, a periodic transmission duty factor is required for current generation SAR systems to measure SAR correctly. The reported SAR must be scaled to 100% transmission duty factor to determine compliance at the maximum tune-up tolerance limit.

According to KDB 248227 D01, this device has installed WLAN engineering testing software which can provide continuous transmitting RF signal. During WLAN SAR testing, this device was operated to transmit continuously at the maximum transmission duty with specified transmission mode, operating frequency, lowest data rate, and maximum output power.

Initial Test Configuration

An initial test configuration is determined for OFDM transmission modes in 2.4 GHz and 5 GHz bands according to the channel bandwidth, modulation and data rate combination(s) with the highest maximum output power specified for production units in each standalone and aggregated frequency band. When the same maximum power is specified for multiple transmission modes in a frequency band, the largest channel bandwidth, lowest order modulation, lowest data rate and lowest order 802.11a/g/n/ac mode is used for SAR measurement, on the highest measured output power channel in the initial test configuration, for each frequency band.

Subsequent Test Configuration

SAR measurement requirements for the remaining 802.11 transmission mode configurations that have not been tested in the initial test configuration are determined separately for each standalone and aggregated frequency band, in each exposure condition, according to the maximum output power specified for production units. Additional power measurements may be required to determine if SAR measurements are required for subsequent highest output power channels in a subsequent test configuration. When the highest reported SAR for the initial test configuration according to the initial test position or fixed exposure position requirements, is adjusted by the ratio of the subsequent test configuration to initial test configuration specified maximum output power and the adjusted SAR is ≤ 1.2 W/kg, SAR is not required for that subsequent test configuration.

SAR Test Configuration and Channel Selection

When multiple channel bandwidth configurations in a frequency band have the same specified maximum output power, the initial test configuration is using largest channel bandwidth, lowest order modulation, lowest data rate, and lowest order 802.11 mode (i.e., 802.11a is chosen over 802.11n then 802.11ac or 802.11g is chosen over 802.11n). After an initial test configuration is determined, if multiple test channels have the same measured maximum output power, the channel chosen for SAR measurement is determined according to the following.

1) The channel closest to mid-band frequency is selected for SAR measurement.

2) For channels with equal separation from mid-band frequency; for example, high and low channels or two mid-band channels, the higher frequency (number) channel is selected for SAR measurement.

Test Reduction for U-NII-1 (5.2 GHz) and U-NII-2A (5.3 GHz) Bands

For devices that operate in both U-NII bands using the same transmitter and antenna(s), SAR test reduction is determined according to the following.

1) When the same maximum output power is specified for both bands, begin SAR measurement in U-NII-2A band by applying the OFDM SAR requirements. If the highest reported SAR for a test configuration is ≤ 1.2 W/kg, SAR is not required for U-NII-1 band for that configuration (802.11 mode and exposure condition).

2) When different maximum output power is specified for the bands, begin SAR measurement in the band with higher specified maximum output power. The highest reported SAR for the tested configuration is adjusted by the ratio of lower to higher specified maximum output power for the two bands. When the adjusted SAR is ≤ 1.2 W/kg, SAR is not required for the band with lower maximum output power in that test configuration.

<Considerations Related to Bluetooth for Setup and Testing>

This device has installed Bluetooth engineering testing software which can provide continuous transmitting RF signal. During Bluetooth SAR testing, this device was operated to transmit continuously at the maximum transmission duty with specified transmission mode, operating frequency, lowest data rate, and maximum output power.

The Bluetooth call box has been used during SAR measurement and the EUT was set to DH5 mode at the maximum output power. Its duty factor was calculated as below and the measured SAR for Bluetooth would be scaled to the 100% transmission duty factor to determine compliance.

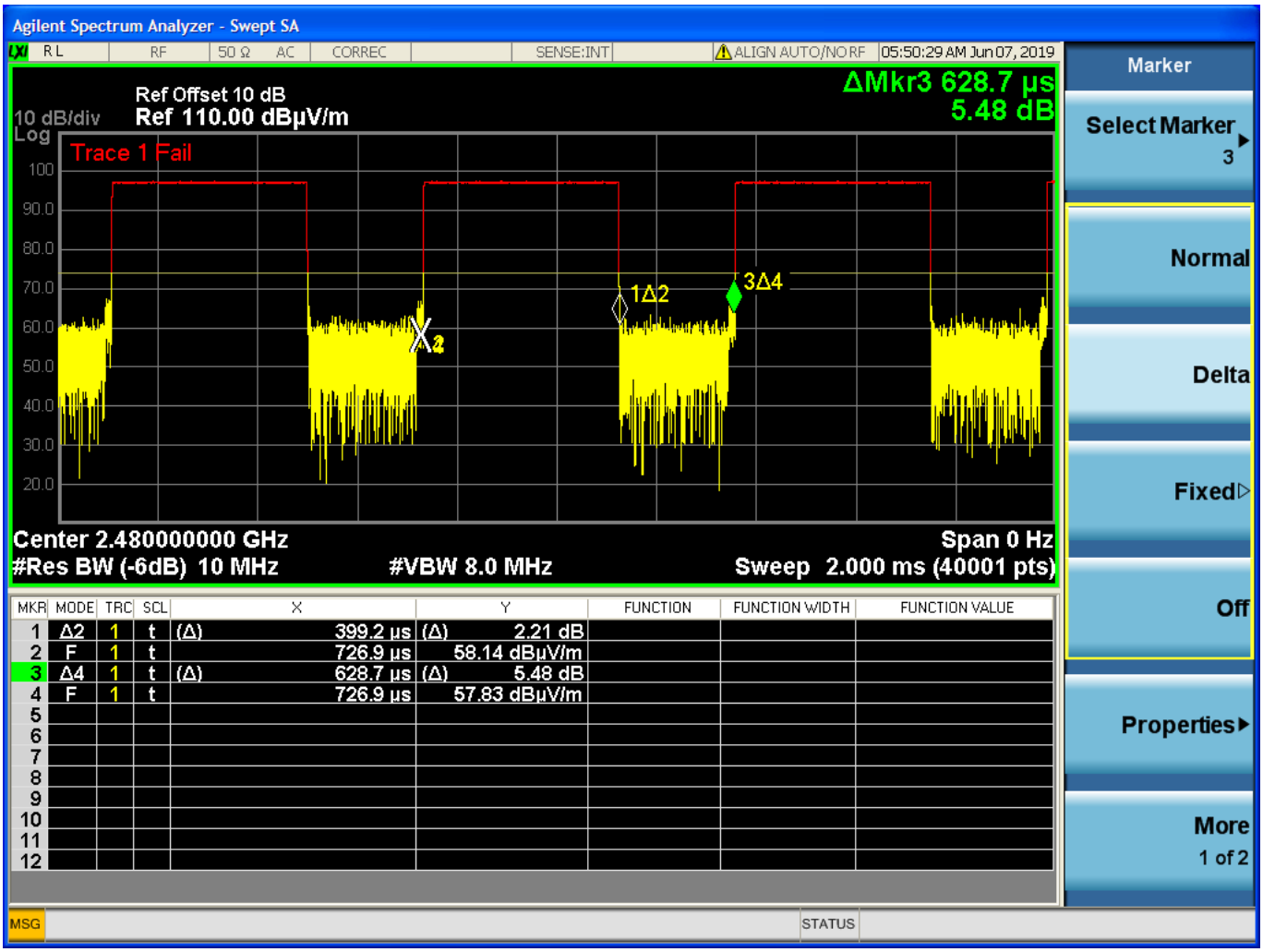

Time-domain plot for Bluetooth transmission signal

The duty factor of Bluetooth signal has been calculated as following.

Duty Factor = Pulse Width / Total Period = 399.2 / 628.7 = 63.5 %

4.2 EUT Testing Position

4.2.1 Extremity Exposure Conditions

This hand-held device was test on the extremity exposure conditions. Extremity SAR was tested on the Front Face, Rear Face, Left Side, Right Side, Top Side and Bottom Side with 0 cm separation distance.

4.3 Tissue Verification

The measuring results for tissue simulating liquid are shown as below.

Test Date	Frequency (MHz)	Liquid Temp. (℃)	Measured Conductivity (σ)	Measured Permittivity (ε_r)	Target Conductivity (σ)	Target Permittivity (ε_r)	Conductivity Deviation (%)	Permittivity Deviation (%)
Jun. 18, 2019	750	23.7	0.884	42.849	0.89	41.9	-0.67	2.26
Jun. 18, 2019	835	23.7	0.918	42.921	0.9	41.5	2.00	3.42
Jun. 18, 2019	1750	23.7	1.326	40.434	1.37	40.1	-3.21	0.83
Jun. 18, 2019	1900	23.7	1.462	39.843	1.4	40	4.43	-0.39
Jun. 19, 2019	2450	23.8	1.824	38.456	1.8	39.2	1.33	-1.90
Jun. 19, 2019	5250	23.8	4.762	35.023	4.71	35.9	1.10	-2.44
Jun. 20, 2019	5600	23.8	5.13	34.536	5.07	35.5	1.18	-2.72
Jun. 20, 2019	5750	23.8	5.278	34.377	5.22	35.4	1.11	-2.89

Note:

The dielectric properties of the tissue simulating liquid must be measured within 24 hours before the SAR testing and within ±5% of the target values. Liquid temperature during the SAR testing must be within ±2 ℃.

4.4 System Validation

The SAR measurement system was validated according to procedures in KDB 865664 D01. The validation status in tabulated summary is as below.

Test Date	Probe S/N	Calibration Point	Measured Conductivity (σ)	Measured Permittivity (ε_r)	Validation for CW			Validation for Modulation		
					Sensitivity Range	Probe Linearity	Probe Isotropy	Modulation Type	Duty Factor	PAR
Jun. 18, 2019	3971	750	0.884	42.849	Pass	Pass	Pass	N/A	N/A	N/A
Jun. 18, 2019	3971	835	0.918	42.921	Pass	Pass	Pass	N/A	N/A	N/A
Jun. 18, 2019	3971	1750	1.326	40.434	Pass	Pass	Pass	N/A	N/A	N/A
Jun. 18, 2019	3971	1900	1.462	39.843	Pass	Pass	Pass	N/A	N/A	N/A
Jun. 19, 2019	3971	2450	1.824	38.456	Pass	Pass	Pass	OFDM	N/A	Pass
Jun. 19, 2019	3971	5250	4.762	35.023	Pass	Pass	Pass	OFDM	N/A	Pass
Jun. 20, 2019	3971	5600	5.13	34.536	Pass	Pass	Pass	OFDM	N/A	Pass
Jun. 20, 2019	3971	5750	5.278	34.377	Pass	Pass	Pass	OFDM	N/A	Pass

4.5 System Verification

The measuring result for system verification is tabulated as below.

Test Date	Mode	Frequency (MHz)	1W Target SAR-10g (W/kg)	Measured SAR-10g (W/kg)	Normalized to 1W SAR-10g (W/kg)	Deviation (%)	Dipole S/N	Probe S/N	DAE S/N
Jun. 18, 2019	Extremity	750	5.30	1.3	5.20	-1.89	1013	3971	1431
Jun. 18, 2019	Extremity	835	6.10	1.56	6.24	2.30	4d121	3971	1431
Jun. 18, 2019	Extremity	1750	19.30	4.71	18.84	-2.38	1055	3971	1431
Jun. 18, 2019	Extremity	1900	20.90	5.57	22.28	6.60	5d036	3971	1431
Jun. 19, 2019	Extremity	2450	24.20	5.87	23.48	-2.98	737	3971	1431
Jun. 19, 2019	Extremity	5250	23.20	2.33	23.30	0.43	1019	3971	1431
Jun. 20, 2019	Extremity	5600	24.50	2.57	25.70	4.90	1019	3971	1431
Jun. 20, 2019	Extremity	5750	23.20	2.29	22.90	-1.29	1019	3971	1431

Note:

Comparing to the reference SAR value provided by SPEAG, the validation data should be within its specification of 10 %. The result indicates the system check can meet the variation criterion and the plots can be referred to Appendix A of this report.

4.6 Maximum Output Power

4.6.1 Maximum Target Conducted Power

The maximum conducted average power (Unit: dBm) including tune-up tolerance is shown as below.

Mode	WCDMA Band II	WCDMA Band V
RMC 12.2K	24.0	25.0
HSDPA / HSUPA / DC-HSDPA	24.0	25.0

Mode	LTE 2	LTE 4	LTE 12
Maximum Target Power	24.0	24.0	25.0

Mode	2.4G WLAN	5.2G WLAN	5.3G WLAN	5.6G WLAN	5.8G WLAN
802.11b	19.0	N/A	N/A	N/A	N/A
802.11g	Ch.1: 17.0 Ch.6:19.0 Ch.11: 13.5	N/A	N/A	N/A	N/A
802.11a	N/A	Ch.36: 17.5 Ch.40:18.0 Ch.44: 17.5 Ch.48: 15.5	Ch.52: 18.0 Ch.56:18.0 Ch.60: 18.0 Ch.64: 15.5	Ch.100: 16.5 Ch.116:18.0 Ch.120: 17.5 Ch.124: 17.5 Ch.132: 17.5 Ch.140: 14.5	18.0
802.11n HT20	Ch.1: 16.0 Ch.6:18.0 Ch.11: 13.0	Ch.36: 16.5 Ch.40:17.0 Ch.44: 16.5 Ch.48: 16.5	Ch.52: 17.0 Ch.56:17.0 Ch.60: 17.0 Ch.64: 15.5	Ch.100: 16.5 Ch.116:17.0 Ch.120: 16.5 Ch.124: 16.5 Ch.132: 16.5 Ch.140: 14.5	17.0
802.11n HT40	N/A	Ch.38: 10.5 Ch.46:16.5	Ch.54: 17.0 Ch.62:10.5	Ch.102: 12.5 Ch.110:17.0 Ch.118: 17.0 Ch.126: 17.0 Ch.134: 17.0	17.0

Mode	2.4G Bluetooth
Bluetooth LE	2.5

4.6.2 Measured Conducted Power Result

The measuring conducted average power (Unit: dBm) is shown as below.

Band	WCDMA Band II			WCDMA Band V			3GPP MPR (dB)
Channel	9262	9400	9538	4132	4182	4233	
Frequency (MHz)	1852.4	1880.0	1907.6	826.4	836.4	846.6	
RMC 12.2K	23.60	23.51	23.68	23.94	24.24	24.06	-
HSDPA Subtest-1	23.35	23.22	23.45	23.83	23.93	23.90	0
HSDPA Subtest-2	23.42	23.42	23.43	23.83	23.87	23.86	0
HSDPA Subtest-3	22.94	22.93	22.98	23.40	23.48	23.44	0.5
HSDPA Subtest-4	22.96	22.92	23.00	23.39	23.46	23.44	0.5
DC-HSDPA Subtest-1	23.26	23.12	23.40	23.72	23.85	23.89	0
DC-HSDPA Subtest-2	23.35	23.35	23.40	23.72	23.79	23.86	0
DC-HSDPA Subtest-3	22.88	22.85	22.89	23.29	23.45	23.37	0.5
DC-HSDPA Subtest-4	22.90	22.90	23.00	23.28	23.40	23.40	0.5
HSUPA Subtest-1	23.15	23.14	23.16	23.63	23.72	23.67	0
HSUPA Subtest-2	21.43	21.41	21.54	21.89	22.43	21.94	2
HSUPA Subtest-3	22.49	22.26	22.52	22.90	22.95	22.92	1
HSUPA Subtest-4	21.97	21.98	21.96	22.41	22.48	22.44	2
HSUPA Subtest-5	23.40	23.30	23.50	23.80	23.80	23.80	0

LTE Band 2

BW	MCS Index	RB Size	RB Offset	Low	Mid	High	3GPP MPR (dB)
		Channel		18700	18900	19100	
		Frequency (MHz)		1860.0	1880.0	1900.0	
20M	QPSK	1	0	23.97	23.77	23.84	0
		1	50	23.92	23.71	23.82	0
		1	99	23.91	23.70	23.81	0
		50	0	22.99	22.78	22.89	1
		50	25	22.86	22.65	22.76	1
		50	50	22.83	22.62	22.73	1
		100	0	22.91	22.70	22.81	1
	16QAM	1	0	22.73	22.58	22.64	1
		1	50	22.66	22.50	22.63	1
		1	99	22.68	22.53	22.61	1
		50	0	21.75	21.58	21.73	2
		50	25	21.66	21.50	21.56	2
		50	50	21.69	21.47	21.61	2
		100	0	21.67	21.55	21.64	2

BW	MCS Index	RB Size	RB Offset	Low	Mid	High	3GPP MPR (dB)
		Channel		18675	18900	19125	
		Frequency (MHz)		1857.5	1880.0	1902.5	
15M	QPSK	1	0	23.93	23.76	23.78	0
		1	37	23.92	23.67	23.82	0
		1	74	23.81	23.64	23.71	0
		36	0	22.98	22.68	22.84	1
		36	19	22.77	22.61	22.76	1
		36	39	22.81	22.55	22.68	1
		75	0	22.86	22.65	22.78	1
	16QAM	1	0	22.64	22.50	22.57	1
		1	37	22.61	22.44	22.63	1
		1	74	22.66	22.44	22.61	1
		36	0	21.70	21.48	21.67	2
		36	19	21.66	21.40	21.54	2
		36	39	21.68	21.44	21.60	2
		75	0	21.67	21.51	21.61	2

BW	MCS Index	RB Size	RB Offset	Low	Mid	High	3GPP MPR (dB)
		Channel		18650	18900	19150	
		Frequency (MHz)		1855.0	1880.0	1905.0	
10M	QPSK	1	0	23.86	23.62	23.70	0
		1	24	23.72	23.65	23.64	0
		1	49	23.73	23.70	23.62	0
		25	0	22.89	22.56	22.77	1
		25	12	22.72	22.50	22.56	1
		25	25	22.59	22.53	22.62	1
		50	0	22.84	22.62	22.64	1
	16QAM	1	0	22.62	22.47	22.52	1
		1	24	22.54	22.35	22.42	1
		1	49	22.45	22.50	22.42	1
		25	0	21.53	21.52	21.59	2
		25	12	21.51	21.47	21.44	2
		25	25	21.44	21.32	21.51	2
		50	0	21.48	21.36	21.51	2

BW	MCS Index	RB Size	RB Offset	Low	Mid	High	3GPP MPR (dB)
		Channel		18625	18900	19175	
		Frequency (MHz)		1852.5	1880.0	1907.5	
5M	QPSK	1	0	23.84	23.61	23.65	0
		1	12	23.76	23.58	23.49	0
		1	24	23.71	23.60	23.67	0
		12	0	22.89	22.62	22.74	1
		12	6	22.65	22.52	22.57	1
		12	13	22.66	22.46	22.65	1
		25	0	22.72	22.49	22.61	1
	16QAM	1	0	22.59	22.48	22.58	1
		1	12	22.64	22.37	22.45	1
		1	24	22.54	22.47	22.58	1
		12	0	21.61	21.42	21.48	2
		12	6	21.46	21.41	21.44	2
		12	13	21.59	21.34	21.40	2
		25	0	21.54	21.45	21.44	2

BW	MCS Index	RB Size	RB Offset	Low	Mid	High	3GPP MPR (dB)
		Channel		18615	18900	19185	
		Frequency (MHz)		1851.5	1880.0	1908.5	
3M	QPSK	1	0	23.81	23.64	23.72	0
		1	7	23.74	23.65	23.64	0
		1	14	23.75	23.54	23.71	0
		8	0	22.85	22.62	22.70	1
		8	3	22.64	22.55	22.73	1
		8	7	22.71	22.49	22.51	1
		15	0	22.77	22.64	22.74	1
	16QAM	1	0	22.67	22.49	22.44	1
		1	7	22.49	22.25	22.46	1
		1	14	22.45	22.46	22.44	1
		8	0	21.71	21.45	21.63	2
		8	3	21.60	21.38	21.40	2
		8	7	21.63	21.38	21.55	2
		15	0	21.50	21.43	21.56	2

BW	MCS Index	RB Size	RB Offset	Low	Mid	High	3GPP MPR (dB)
		Channel		18607	18900	19193	
		Frequency (MHz)		1850.7	1880.0	1909.3	
1.4M	QPSK	1	0	23.92	23.59	23.60	0
		1	2	23.87	23.55	23.65	0
		1	5	23.69	23.49	23.61	0
		3	0	23.87	23.66	23.74	0
		3	1	23.76	23.51	23.66	0
		3	3	23.61	23.54	23.57	0
		6	0	22.78	22.66	22.68	1
	16QAM	1	0	22.68	22.54	22.50	1
		1	2	22.56	22.48	22.61	1
		1	5	22.58	22.37	22.53	1
		3	0	22.58	22.52	22.67	1
		3	1	22.54	22.35	22.39	1
		3	3	22.57	22.39	22.40	1
		6	0	21.47	21.38	21.53	2

LTE Band 4

BW	MCS Index	RB Size	RB Offset	Low	Mid	High	3GPP MPR (dB)
		Channel		20050	20175	20300	
		Frequency (MHz)		1720.0	1732.5	1745.0	
20M	QPSK	1	0	23.94	23.67	23.74	0
		1	50	23.83	23.67	23.72	0
		1	99	23.83	23.68	23.71	0
		50	0	22.92	22.78	22.83	1
		50	25	22.81	22.65	22.73	1
		50	50	22.73	22.60	22.70	1
		100	0	22.87	22.63	22.77	1
	16QAM	1	0	22.72	22.53	22.69	1
		1	50	22.66	22.41	22.61	1
		1	99	22.77	22.37	22.70	1
		50	0	21.77	21.56	21.71	2
		50	25	21.67	21.37	21.56	2
		50	50	21.70	21.33	21.68	2
		100	0	21.72	21.58	21.70	2

BW	MCS Index	RB Size	RB Offset	Low	Mid	High	3GPP MPR (dB)
		Channel		20025	20175	20325	
		Frequency (MHz)		1717.5	1732.5	1747.5	
15M	QPSK	1	0	23.85	23.66	23.66	0
		1	37	23.78	23.64	23.67	0
		1	74	23.76	23.66	23.64	0
		36	0	22.90	22.73	22.75	1
		36	19	22.76	22.59	22.65	1
		36	39	22.69	22.57	22.64	1
		75	0	22.80	22.54	22.74	1
	16QAM	1	0	22.69	22.46	22.62	1
		1	37	22.59	22.41	22.60	1
		1	74	22.71	22.29	22.64	1
		36	0	21.74	21.55	21.67	2
		36	19	21.67	21.34	21.48	2
		36	39	21.69	21.33	21.68	2
		75	0	21.67	21.56	21.63	2

BW	MCS Index	RB Size	RB Offset	Low	Mid	High	3GPP MPR (dB)
		Channel		20000	20175	20350	
		Frequency (MHz)		1715.0	1732.5	1750.0	
10M	QPSK	1	0	23.85	23.64	23.51	0
		1	24	23.73	23.59	23.58	0
		1	49	23.60	23.49	23.58	0
		25	0	22.70	22.63	22.77	1
		25	12	22.64	22.58	22.54	1
		25	25	22.62	22.47	22.56	1
		50	0	22.79	22.48	22.72	1
	16QAM	1	0	22.55	22.48	22.55	1
		1	24	22.48	22.19	22.45	1
		1	49	22.69	22.19	22.51	1
		25	0	21.67	21.41	21.55	2
		25	12	21.60	21.26	21.36	2
		25	25	21.61	21.12	21.58	2
		50	0	21.49	21.48	21.54	2

BW	MCS Index	RB Size	RB Offset	Low	Mid	High	3GPP MPR (dB)
		Channel		19975	20175	20375	
		Frequency (MHz)		1712.5	1732.5	1752.5	
5M	QPSK	1	0	23.86	23.44	23.46	0
		1	12	23.77	23.47	23.60	0
		1	24	23.72	23.64	23.52	0
		12	0	22.74	22.61	22.70	1
		12	6	22.64	22.47	22.64	1
		12	13	22.60	22.48	22.42	1
		25	0	22.74	22.58	22.58	1
	16QAM	1	0	22.64	22.41	22.54	1
		1	12	22.57	22.30	22.42	1
		1	24	22.68	22.27	22.65	1
		12	0	21.64	21.42	21.60	2
		12	6	21.54	21.21	21.37	2
		12	13	21.51	21.16	21.59	2
		25	0	21.56	21.40	21.60	2

BW	MCS Index	RB Size	RB Offset	Low	Mid	High	3GPP MPR (dB)
		Channel		19965	20175	20385	
		Frequency (MHz)		1711.5	1732.5	1753.5	
3M	QPSK	1	0	23.75	23.59	23.62	0
		1	7	23.65	23.45	23.55	0
		1	14	23.71	23.63	23.63	0
		8	0	22.83	22.57	22.79	1
		8	3	22.66	22.48	22.64	1
		8	7	22.61	22.51	22.54	1
		15	0	22.70	22.47	22.74	1
	16QAM	1	0	22.60	22.39	22.54	1
		1	7	22.47	22.20	22.55	1
		1	14	22.58	22.26	22.56	1
		8	0	21.57	21.37	21.51	2
		8	3	21.42	21.31	21.47	2
		8	7	21.57	21.23	21.50	2
		15	0	21.56	21.52	21.57	2

BW	MCS Index	RB Size	RB Offset	Low	Mid	High	3GPP MPR (dB)
		Channel		19957	20175	20393	
		Frequency (MHz)		1710.7	1732.5	1754.3	
1.4M	QPSK	1	0	23.83	23.52	23.64	0
		1	2	23.72	23.63	23.57	0
		1	5	23.62	23.45	23.68	0
		3	0	23.70	23.76	23.60	0
		3	1	23.74	23.42	23.62	0
		3	3	23.63	23.50	23.62	0
		6	0	22.79	22.44	22.73	1
	16QAM	1	0	22.60	22.32	22.50	1
		1	2	22.60	22.35	22.49	1
		1	5	22.52	22.26	22.56	1
		3	0	22.74	22.39	22.53	1
		3	1	22.49	22.17	22.45	1
		3	3	22.68	22.23	22.52	1
		6	0	21.58	21.46	21.67	2

LTE Band 12

BW	MCS Index	RB Size	RB Offset	Low	Mid	High	3GPP MPR (dB)
		Channel		23060	23095	23130	
		Frequency (MHz)		704.0	707.5	711.0	
10M	QPSK	1	0	24.25	24.32	24.37	0
		1	24	24.14	24.21	24.34	0
		1	49	24.11	24.18	24.31	0
		25	0	22.95	23.02	23.15	1
		25	12	22.91	22.98	23.11	1
		25	25	22.89	22.96	23.09	1
		50	0	22.96	23.03	23.16	1
	16QAM	1	0	23.21	23.25	23.31	1
		1	24	23.17	23.21	23.27	1
		1	49	23.09	23.13	23.19	1
		25	0	22.07	22.11	22.17	2
		25	12	22.01	22.05	22.11	2
		25	25	22.03	22.07	22.13	2
		50	0	22.08	22.12	22.18	2

BW	MCS Index	RB Size	RB Offset	Low	Mid	High	3GPP MPR (dB)
		Channel		23035	23095	23155	
		Frequency (MHz)		701.5	707.5	713.5	
5M	QPSK	1	0	24.21	24.28	24.34	0
		1	12	24.11	24.13	24.27	0
		1	24	24.08	24.09	24.28	0
		12	0	22.91	22.96	23.07	1
		12	6	22.82	22.95	23.11	1
		12	13	22.82	22.90	23.02	1
		25	0	22.87	22.95	23.06	1
	16QAM	1	0	23.21	23.22	23.21	1
		1	12	23.08	23.15	23.18	1
		1	24	23.07	23.06	23.12	1
		12	0	22.03	22.11	22.15	2
		12	6	21.91	22.04	22.06	2
		12	13	21.94	22.05	22.06	2
		25	0	22.05	22.10	22.09	2

BW	MCS Index	RB Size	RB Offset	Low	Mid	High	3GPP MPR (dB)
		Channel		23025	23095	23165	
		Frequency (MHz)		700.5	707.5	714.5	
3M	QPSK	1	0	24.26	24.20	24.18	0
		1	7	24.01	24.09	24.09	0
		1	14	23.92	24.06	24.16	0
		8	0	22.84	22.94	23.02	1
		8	3	22.75	22.88	23.01	1
		8	7	22.79	22.87	22.91	1
		15	0	22.84	22.84	23.06	1
	16QAM	1	0	23.08	23.02	23.16	1
		1	7	23.08	23.03	23.14	1
		1	14	22.96	22.90	23.07	1
		8	0	21.89	21.99	22.09	2
		8	3	21.83	21.89	22.07	2
		8	7	21.94	21.98	22.00	2
		15	0	21.97	21.95	22.08	2

BW	MCS Index	RB Size	RB Offset	Low	Mid	High	3GPP MPR (dB)
		Channel		23017	23095	23173	
		Frequency (MHz)		699.7	707.5	715.3	
1.4M	QPSK	1	0	24.34	24.25	24.20	0
		1	2	23.97	24.09	24.09	0
		1	5	23.93	23.96	24.29	0
		3	0	23.79	23.98	24.07	0
		3	1	23.68	23.81	23.99	0
		3	3	23.72	23.78	24.03	0
		6	0	22.83	22.88	23.02	1
	16QAM	1	0	23.10	23.16	23.13	1
		1	2	22.97	23.12	23.14	1
		1	5	23.00	22.97	23.00	1
		3	0	22.90	22.91	23.03	1
		3	1	22.97	22.91	22.95	1
		3	3	22.99	22.99	23.00	1
		6	0	21.97	22.01	22.13	2

<WLAN 2.4G>

Mode	Channel	Frequency (MHz)	Average Power
802.11b	1	2412	18.91
	6	2437	18.61
	11	2462	18.92

<WLAN 5.3G>

Mode	Channel	Frequency (MHz)	Average Power
802.11a	52	5260	17.62
	56	5280	17.58
	60	5300	17.69
	64	5320	15.43

<WLAN 5.6G>

Mode	Channel	Frequency (MHz)	Average Power
802.11a	100	5500	16.37
	116	5580	17.78
	132	5660	17.14
	140	5700	14.35

<WLAN 5.8G>

Mode	Channel	Frequency (MHz)	Average Power
802.11a	149	5745	17.74
	153	5765	17.69
	157	5785	17.81
	161	5805	17.67
	165	5825	17.85

<Bluetooth>

Mode	Channel	Frequency (MHz)	Average Power
Bluetooth LE	0	2402	2.31
	19	2440	1.76
	39	2480	2.38

4.7 SAR Testing Results

4.7.1 SAR Test Reduction Considerations

<KDB 447498 D01, General RF Exposure Guidance>

Testing of other required channels within the operating mode of a frequency band is not required when the reported SAR for the mid-band or highest output power channel is:

(1) ≤ 0.8 W/kg or 2.0 W/kg, for 1-g or 10-g respectively, when the transmission band is ≤ 100 MHz

(2) ≤ 0.6 W/kg or 1.5 W/kg, for 1-g or 10-g respectively, when the transmission band is between 100 MHz and 200 MHz

(3) ≤ 0.4 W/kg or 1.0 W/kg, for 1-g or 10-g respectively, when the transmission band is ≥ 200 MHz

When SAR is not measured at the maximum power level allowed for production units, the measured SAR will be scaled to the maximum tune-up tolerance limit to determine compliance. The scaling factor for the tune-up power is defined as maximum tune-up limit (mW) / measured conducted power (mW). The reported SAR would be calculated by measured SAR x tune-up power scaling factor.

The SAR has been measured with highest transmission duty factor supported by the test mode tools for WLAN and/or Bluetooth. When the transmission duty factor could not achieve 100%, the reported SAR will be scaled to 100% transmission duty factor to determine compliance at the maximum tune-up power. The scaling factor for the duty factor is defined as 100% / transmission duty cycle (%). The reported SAR would be calculated by measured SAR x tune-up power scaling factor x duty cycle scaling factor.

<KDB 941225 D01, 3G SAR Measurement Procedures>

The mode tested for SAR is referred to as the primary mode. The equivalent modes considered for SAR test reduction are denoted as secondary modes. Both primary and secondary modes must be in the same frequency band. When the maximum output power and tune-up tolerance specified for production units in a secondary mode is ≤ 1/4 dB higher than the primary mode or when the highest reported SAR of the primary mode is scaled by the ratio of specified maximum output power and tune-up tolerance of secondary to primary mode and the adjusted SAR is ≤ 1.2 W/kg, SAR measurement is not required for the secondary mode.

<KDB 941225 D05, SAR Evaluation Considerations for LTE Devices>

(1) QPSK with 1 RB and 50% RB allocation

Start with the largest channel bandwidth and measure SAR, using the RB offset and required test channel combination with the highest maximum output power among RB offsets at the upper edge, middle and lower edge of each required test channel. When the reported SAR is ≤ 0.8 W/kg, testing of the remaining RB offset configurations and required test channels is not required; otherwise, SAR is required for the remaining required test channels and only for the RB offset configuration with the highest output power for that channel. When the reported SAR of a required test channel is > 1.45 W/kg, SAR is required for all three RB offset configurations for that required test channel.

(2) QPSK with 100% RB allocation

SAR is not required when the highest maximum output power for 100% RB allocation is less than the highest maximum output power in 50% and 1 RB allocations and the highest reported SAR for 1 RB and 50% RB allocation are ≤ 0.8 W/kg. Otherwise, SAR is measured for the highest output power channel; and if the reported SAR is > 1.45

W/kg, the remaining required test channels must also be tested.

(3) Higher order modulations

SAR is required only when the highest maximum output power for the configuration in the higher order modulation is > 1/2 dB higher than the same configuration in QPSK or when the reported SAR for the QPSK configuration is > 1.45 W/kg.

(4) Other channel bandwidth

SAR is required when the highest maximum output power of the smaller channel bandwidth is > 1/2 dB higher than the equivalent channel configurations in the largest channel bandwidth configuration or the reported SAR of a configuration for the largest channel bandwidth is > 1.45 W/kg.

<KDB 248227 D01, SAR Guidance for Wi-Fi Transmitters>

(1) For handsets operating next to ear, hotspot mode or mini-tablet configurations, the initial test position procedures were applied. The test position with the highest extrapolated peak SAR will be used as the initial test position. When the reported SAR of initial test position is <= 0.4 W/kg, SAR testing for remaining test positions is not required. Otherwise, SAR is evaluated at the subsequent highest peak SAR positions until the reported SAR result is <= 0.8 W/kg or all test positions are measured.

(2) For WLAN 2.4 GHz, the highest measured maximum output power channel for DSSS was selected for SAR measurement. When the reported SAR is <= 0.8 W/kg, no further SAR testing is required. Otherwise, SAR is evaluated at the next highest measured output power channel. When any reported SAR is > 1.2 W/kg, SAR is required for the third channel. For OFDM modes (802.11g/n), SAR is not required when the highest reported SAR for DSSS is adjusted by the ratio of OFDM to DSSS specified maximum output power and it is <= 1.2 W/kg.

(3) For WLAN 5 GHz, the initial test configuration was selected according to the transmission mode with the highest maximum output power. When the reported SAR of initial test configuration is > 0.8 W/kg, SAR is required for the subsequent highest measured output power channel until the reported SAR result is <= 1.2 W/kg or all required channels are measured. For other transmission modes, SAR is not required when the highest reported SAR for initial test configuration is adjusted by the ratio of subsequent test configuration to initial test configuration specified maximum output power and it is <= 1.2 W/kg.

4.7.2 SAR Results for Extremity Exposure Condition (Test Separation Distance is 0 mm)

Plot No.	Band	Mode	Test Position	Ch.	Max. Tune-up Power (dBm)	Measured Conducted Power (dBm)	Scaling Factor	Power Drift (dB)	Measured SAR-10g (W/kg)	Scaled SAR-10g (W/kg)
	WCDMA II	RMC12.2K	Front Face	9538	24.0	23.68	1.08	0.03	0.225	0.24
01	WCDMA II	RMC12.2K	Rear Face	9538	24.0	23.68	1.08	0.05	1.73	**1.87**
	WCDMA II	RMC12.2K	Left Side	9538	24.0	23.68	1.08	0.05	0.438	0.47
	WCDMA II	RMC12.2K	Right Side	9538	24.0	23.68	1.08	0.12	0.497	0.54
	WCDMA II	RMC12.2K	Top Side	9538	24.0	23.68	1.08	0.09	1.69	1.83
	WCDMA II	RMC12.2K	Bottom Side	9538	24.0	23.68	1.08	0.00	<0.001	0.00
	WCDMA II	RMC12.2K	Rear Face	9260	24.0	23.60	1.10	-0.03	1.67	1.84
	WCDMA II	RMC12.2K	Rear Face	9400	24.0	23.51	1.12	0.04	1.65	1.85
	WCDMA V	RMC12.2K	Front Face	4182	25.0	24.24	1.19	0.03	0.091	0.11
02	WCDMA V	RMC12.2K	Rear Face	4182	25.0	24.24	1.19	-0.05	0.625	**0.74**
	WCDMA V	RMC12.2K	Left Side	4182	25.0	24.24	1.19	0.05	0.159	0.19
	WCDMA V	RMC12.2K	Right Side	4182	25.0	24.24	1.19	0.12	0.177	0.21
	WCDMA V	RMC12.2K	Top Side	4182	25.0	24.24	1.19	0.09	0.579	0.69
	WCDMA V	RMC12.2K	Bottom Side	4182	25.0	24.24	1.19	0.00	<0.001	0.00
	WCDMA V	RMC12.2K	Rear Face	4132	25.0	23.94	1.28	-0.03	0.573	0.73
	WCDMA V	RMC12.2K	Rear Face	4233	25.0	24.06	1.24	0.04	0.592	0.73

Note: The "< 0.001" means there is no SAR value or the SAR is too low to be measured.

Plot No.	Band	Mode	Test Position	Ch.	RB#	RB Offset	Max. Tune-up Power (dBm)	Measured Conducted Power (dBm)	Scaling Factor	Power Drift (dB)	Measured SAR-10g (W/kg)	Scaled SAR-10g (W/kg)
	LTE 2	QPSK20M	Front Face	18700	1	0	24.0	23.97	1.01	0.05	0.163	0.16
03	LTE 2	QPSK20M	Rear Face	18700	1	0	24.0	23.97	1.01	-0.04	2.02	**2.04**
	LTE 2	QPSK20M	Left Side	18700	1	0	24.0	23.97	1.01	0.12	0.106	0.11
	LTE 2	QPSK20M	Right Side	18700	1	0	24.0	23.97	1.01	0.09	0.175	0.18
	LTE 2	QPSK20M	Top Side	18700	1	0	24.0	23.97	1.01	-0.03	0.344	0.35
	LTE 2	QPSK20M	Bottom Side	18700	1	0	24.0	23.97	1.01	0.00	<0.001	0.00
	LTE 2	QPSK20M	Front Face	18700	50	0	23.0	22.99	1.00	-0.04	0.111	0.11
	LTE 2	QPSK20M	Rear Face	18700	50	0	23.0	22.99	1.00	0.05	1.85	1.85
	LTE 2	QPSK20M	Left Side	18700	50	0	23.0	22.99	1.00	0.13	0.118	0.12
	LTE 2	QPSK20M	Right Side	18700	50	0	23.0	22.99	1.00	-0.05	0.197	0.20
	LTE 2	QPSK20M	Top Side	18700	50	0	23.0	22.99	1.00	-0.18	0.212	0.21
	LTE 2	QPSK20M	Bottom Side	18700	50	0	23.0	22.99	1.00	0.00	<0.001	0.00
	LTE 2	QPSK20M	Rear Face	18900	1	0	24.0	23.77	1.05	0.03	1.54	1.62
	LTE 2	QPSK20M	Rear Face	19100	1	0	24.0	23.84	1.04	0.01	1.69	1.76
	LTE 2	QPSK20M	Rear Face	18700	100	0	23.0	22.91	1.02	0.12	1.59	1.62
	LTE 2	QPSK20M	Rear Face	18700	1	0	24.0	23.97	1.01	0.11	1.97	1.99
	LTE 4	QPSK20M	Front Face	20050	1	0	24.0	23.94	1.01	0.03	0.048	0.05
04	LTE 4	QPSK20M	Rear Face	20050	1	0	24.0	23.94	1.01	-0.11	2.12	**2.14**
	LTE 4	QPSK20M	Left Side	20050	1	0	24.0	23.94	1.01	0.12	0.063	0.06
	LTE 4	QPSK20M	Right Side	20050	1	0	24.0	23.94	1.01	0.05	0.112	0.11
	LTE 4	QPSK20M	Top Side	20050	1	0	24.0	23.94	1.01	-0.03	0.307	0.31
	LTE 4	QPSK20M	Bottom Side	20050	1	0	24.0	23.94	1.01	0.00	<0.001	0.00
	LTE 4	QPSK20M	Front Face	20050	50	0	23.0	22.92	1.02	-0.15	0.026	0.03
	LTE 4	QPSK20M	Rear Face	20050	50	0	23.0	22.92	1.02	0.06	1.44	1.47
	LTE 4	QPSK20M	Left Side	20050	50	0	23.0	22.92	1.02	-0.06	0.031	0.03
	LTE 4	QPSK20M	Right Side	20050	50	0	23.0	22.92	1.02	0.01	0.041	0.04
	LTE 4	QPSK20M	Top Side	20050	50	0	23.0	22.92	1.02	0.05	0.165	0.17
	LTE 4	QPSK20M	Bottom Side	20050	50	0	23.0	22.92	1.02	0.00	<0.001	0.00
	LTE 4	QPSK20M	Rear Face	20175	1	99	24.0	23.68	1.08	-0.04	1.97	2.13
	LTE 4	QPSK20M	Rear Face	20300	1	0	24.0	23.74	1.06	-0.14	1.96	2.08
	LTE 4	QPSK20M	Rear Face	20050	100	0	23.0	22.87	1.03	-0.12	1.53	1.58
	LTE 4	QPSK20M	Rear Face	20050	1	0	24.0	23.94	1.01	0.03	2.08	2.10

Note: The "< 0.001" means there is no SAR value or the SAR is too low to be measured.

Plot No.	Band	Mode	Test Position	Ch.	RB#	RB Offset	Max. Tune-up Power (dBm)	Measured Conducted Power (dBm)	Scaling Factor	Power Drift (dB)	Measured SAR-10g (W/kg)	Scaled SAR-10g (W/kg)
	LTE 12	QPSK10M	Front Face	23130	1	0	25.0	24.37	1.16	0.05	0.071	0.08
05	LTE 12	QPSK10M	Rear Face	23130	1	0	25.0	24.37	1.16	-0.19	0.157	**0.18**
	LTE 12	QPSK10M	Left Side	23130	1	0	25.0	24.37	1.16	0.13	0.061	0.07
	LTE 12	QPSK10M	Right Side	23130	1	0	25.0	24.37	1.16	0.05	0.051	0.06
	LTE 12	QPSK10M	Top Side	23130	1	0	25.0	24.37	1.16	-0.12	0.145	0.17
	LTE 12	QPSK10M	Bottom Side	23130	1	0	25.0	24.37	1.16	0.00	<0.001	0.00
	LTE 12	QPSK10M	Front Face	23130	25	0	24.0	23.15	1.22	0.09	0.044	0.05
	LTE 12	QPSK10M	Rear Face	23130	25	0	24.0	23.15	1.22	-0.03	0.129	0.16
	LTE 12	QPSK10M	Left Side	23130	25	0	24.0	23.15	1.22	-0.11	0.029	0.04
	LTE 12	QPSK10M	Right Side	23130	25	0	24.0	23.15	1.22	0.00	<0.001	0.00
	LTE 12	QPSK10M	Top Side	23130	25	0	24.0	23.15	1.22	0.09	0.141	0.17
	LTE 12	QPSK10M	Bottom Side	23130	25	0	24.0	23.15	1.22	0.00	<0.001	0.00
	LTE 12	QPSK10M	Rear Face	23060	1	0	25.0	24.25	1.19	0.05	0.147	0.17
	LTE 12	QPSK10M	Rear Face	23095	1	0	25.0	24.32	1.17	0.03	0.149	0.17

Note: The "< 0.001" means there is no SAR value or the SAR is too low to be measured.

Plot No.	Band	Mode	Test Position	Ch.	Duty Cycle	Crest Factor	Max. Tune-up Power (dBm)	Measured Conducted Power (dBm)	Scaling Factor	Power Drift (dB)	Measured SAR-10g (W/kg)	Scaled SAR-10g (W/kg)
	WLAN2.4G	802.11b	Front Face	11	97.90	1.02	19.0	18.92	1.02	-0.14	0.023	0.02
	WLAN2.4G	802.11b	Rear Face	11	97.90	1.02	19.0	18.92	1.02	0.10	0.173	0.18
	WLAN2.4G	802.11b	Left Side	11	97.90	1.02	19.0	18.92	1.02	0.03	0.021	0.02
06	WLAN2.4G	802.11b	Right Side	11	97.90	1.02	19.0	18.92	1.02	-0.09	0.225	**0.23**
	WLAN2.4G	802.11b	Top Side	11	97.90	1.02	19.0	18.92	1.02	0.05	0.074	0.08
	WLAN2.4G	802.11b	Bottom Side	11	97.90	1.02	19.0	18.92	1.02	0.00	<0.001	0.00
	WLAN2.4G	802.11b	Right Side	1	97.90	1.02	19.0	18.91	1.02	0.03	0.218	0.23
	WLAN2.4G	802.11b	Right Side	6	97.90	1.02	19.0	18.61	1.09	-0.01	0.201	0.22
	WLAN5.3G	802.11a	Front Face	60	87.60	1.14	18.0	17.69	1.07	0.00	<0.001	0.00
	WLAN5.3G	802.11a	Rear Face	60	87.60	1.14	18.0	17.69	1.07	0.06	0.102	0.12
	WLAN5.3G	802.11a	Left Side	60	87.60	1.14	18.0	17.69	1.07	0.00	<0.001	0.00
07	WLAN5.3G	802.11a	Right Side	60	87.60	1.14	18.0	17.69	1.07	-0.16	0.214	**0.26**
	WLAN5.3G	802.11a	Top Side	60	87.60	1.14	18.0	17.69	1.07	0.03	0.166	0.20
	WLAN5.3G	802.11a	Bottom Side	60	87.60	1.14	18.0	17.69	1.07	0.00	<0.001	0.00
	WLAN5.3G	802.11a	Right Side	52	87.60	1.14	18.0	17.62	1.09	0.07	0.189	0.23
	WLAN5.3G	802.11a	Right Side	56	87.60	1.14	18.0	17.58	1.10	0.11	0.203	0.25
	WLAN5.3G	802.11a	Right Side	64	87.60	1.14	15.5	15.43	1.02	0.09	0.169	0.20
	WLAN5.6G	802.11a	Front Face	116	87.60	1.14	18.0	17.78	1.05	0.00	<0.001	0.00
	WLAN5.6G	802.11a	Rear Face	116	87.60	1.14	18.0	17.78	1.05	0.03	0.118	0.14
	WLAN5.6G	802.11a	Left Side	116	87.60	1.14	18.0	17.78	1.05	0.00	<0.001	0.00
	WLAN5.6G	802.11a	Right Side	116	87.60	1.14	18.0	17.78	1.05	-0.13	0.391	0.47
	WLAN5.6G	802.11a	Top Side	116	87.60	1.14	18.0	17.78	1.05	0.05	0.253	0.30
	WLAN5.6G	802.11a	Bottom Side	116	87.60	1.14	18.0	17.78	1.05	0.00	<0.001	0.00
	WLAN5.6G	802.11a	Right Side	100	87.60	1.14	16.5	16.37	1.03	0.06	0.189	0.22
	WLAN5.6G	802.11a	Right Side	120	87.60	1.14	17.5	17.03	1.11	-0.09	0.232	0.29
	WLAN5.6G	802.11a	Right Side	124	87.60	1.14	17.5	17.12	1.09	-0.01	0.352	0.44
08	WLAN5.6G	802.11a	Right Side	132	87.60	1.14	17.5	17.14	1.09	-0.15	0.471	**0.59**
	WLAN5.6G	802.11a	Right Side	140	87.60	1.14	14.5	14.35	1.04	0.02	0.259	0.31
	WLAN5.8G	802.11a	Front Face	165	87.60	1.14	18.0	17.85	1.04	0.00	<0.001	0.00
	WLAN5.8G	802.11a	Rear Face	165	87.60	1.14	18.0	17.85	1.04	-0.05	0.285	0.34
	WLAN5.8G	802.11a	Left Side	165	87.60	1.14	18.0	17.85	1.04	0.01	0.068	0.08
	WLAN5.8G	802.11a	Right Side	165	87.60	1.14	18.0	17.85	1.04	-0.07	0.411	0.49
	WLAN5.8G	802.11a	Top Side	165	87.60	1.14	18.0	17.85	1.04	0.13	0.266	0.32
	WLAN5.8G	802.11a	Bottom Side	165	87.60	1.14	18.0	17.85	1.04	0.00	<0.001	0.00
09	WLAN5.8G	802.11a	Right Side	149	87.60	1.14	18.0	17.74	1.06	0.01	0.442	**0.53**
	WLAN5.8G	802.11a	Right Side	153	87.60	1.14	18.0	17.69	1.07	0.06	0.361	0.44
	WLAN5.8G	802.11a	Right Side	157	87.60	1.14	18.0	17.81	1.04	-0.01	0.407	0.48
	WLAN5.8G	802.11a	Right Side	161	87.60	1.14	18.0	17.67	1.08	0.05	0.305	0.38

Note: The "< 0.001" means there is no SAR value or the SAR is too low to be measured.

Plot No.	Band	Mode	Test Position	Ch.	Duty Cycle	Crest Factor	Max. Tune-up Power (dBm)	Measured Conducted Power (dBm)	Scaling Factor	Power Drift (dB)	Measured SAR-10g (W/kg)	Scaled SAR-10g (W/kg)
	BT	LE	Front Face	39	63.50	1.57	2.5	2.38	1.03	0.00	0.000154	0.00
	BT	LE	Rear Face	39	63.50	1.57	2.5	2.38	1.03	0.00	0.00117	0.00
	BT	LE	Left Side	39	63.50	1.57	2.5	2.38	1.03	0.00	0.000146	0.00
10	BT	LE	Right Side	39	63.50	1.57	2.5	2.38	1.03	-0.09	0.00153	**0.00**
	BT	LE	Top Side	39	63.50	1.57	2.5	2.38	1.03	0.00	0.000502	0.00
	BT	LE	Bottom Side	39	63.50	1.57	2.5	2.38	1.03	0.00	<0.001	0.00
	BT	LE	Right Side	0	63.50	1.57	2.5	2.31	1.04	0.03	0.00147	0.00
	BT	LE	Right Side	19	63.50	1.57	2.5	1.76	1.19	-0.01	0.00112	0.00

Note: The "< 0.001" means there is no SAR value or the SAR is too low to be measured.

4.7.3 SAR Measurement Variability

According to KDB 865664 D01, SAR measurement variability was assessed for each frequency band, which is determined by the SAR probe calibration point and tissue-equivalent medium used for the device measurements. When both head and body tissue-equivalent media are required for SAR measurements in a frequency band, the variability measurement procedures should be applied to the tissue medium with the highest measured SAR, using the highest measured SAR configuration for that tissue-equivalent medium. Alternatively, if the highest measured SAR for both head and body tissue-equivalent media are ≤ 1.45 W/kg and the ratio of these highest SAR values, i.e., largest divided by smallest value, is ≤ 1.10, the highest SAR configuration for either head or body tissue-equivalent medium may be used to perform the repeated measurement. These additional measurements are repeated after the completion of all measurements requiring the same head or body tissue-equivalent medium in a frequency band. The test device should be returned to ambient conditions (normal room temperature) with the battery fully charged before it is re-mounted on the device holder for the repeated measurement(s) to minimize any unexpected variations in the repeated results.

SAR repeated measurement procedure:

1. When the highest measured SAR is < 0.80 W/kg, repeated measurement is not required.
2. When the highest measured SAR is >= 0.80 W/kg, repeat that measurement once.
3. If the ratio of largest to smallest SAR for the original and first repeated measurements is > 1.20, or when the original or repeated measurement is >= 1.45 W/kg, perform a second repeated measurement.
4. If the ratio of largest to smallest SAR for the original, first and second repeated measurements is > 1.20, and the original, first or second repeated measurement is >= 1.5 W/kg, perform a third repeated measurement.

Band	Mode	Test Position	Ch.	Original Measured SAR-1g (W/kg)	1st Repeated SAR-1g (W/kg)	L/S Ratio	2nd Repeated SAR-1g (W/kg)	L/S Ratio	3rd Repeated SAR-1g (W/kg)	L/S Ratio
LTE 2	QPSK20M	Rear Face	18700	2.02	1.97	1.03	N/A	N/A	N/A	N/A
LTE 4	QPSK20M	Rear Face	20050	2.12	2.08	1.02	N/A	N/A	N/A	N/A

4.7.4 Simultaneous Multi-band Transmission Evaluation

<Possibilities of Simultaneous Transmission>

The simultaneous transmission possibilities for this device are listed as below.

Simultaneous TX Combination	Capable Transmit Configurations	Body Exposure Condition
1	WWAN + BT	Yes

Note :

1. The WLAN 2.4G and WLAN 5G cannot transmit simultaneously.
2. The WLAN and Bluetooth cannot transmit simultaneously.
3. The WLAN and WWAN cannot transmit simultaneously.

<SAR Summation Analysis>

Simultaneous transmission SAR test exclusion is determined for each operating configuration and exposure condition according to the reported standalone SAR of each applicable simultaneous transmitting antenna. When the sum of SAR_{1g} of all simultaneously transmitting antennas in an operating mode and exposure condition combination is within the SAR limit (SAR_{1g} 1.6 W/kg), the simultaneous transmission SAR is not required. When the sum of SAR_{1g} is greater than the SAR limit (SAR_{1g} 1.6 W/kg), SAR test exclusion is determined by the SPLSR.

No.	Conditions (SAR1 + SAR2)	Exposure Condition	Test Position	Max. SAR1	Max. SAR2	SAR Summation	SPLSR Analysis
1	WCDMA II + BT (DSS)	Extremity	Front Face	0.24	0.00	0.24	∑SAR < 4.0, Not required
			Rear Face	1.87	0.00	1.87	∑SAR < 4.0, Not required
			Left Side	0.47	0.00	0.47	∑SAR < 4.0, Not required
			Right Side	0.54	0.00	0.54	∑SAR < 4.0, Not required
			Top Side	1.83	0.00	1.83	∑SAR < 4.0, Not required
			Bottom Side	0.00	0.00	0.00	∑SAR < 4.0, Not required
2	WCDMA V + BT (DSS)	Extremity	Front Face	0.11	0.00	0.11	∑SAR < 4.0, Not required
			Rear Face	0.74	0.00	0.74	∑SAR < 4.0, Not required
			Left Side	0.19	0.00	0.19	∑SAR < 4.0, Not required
			Right Side	0.21	0.00	0.21	∑SAR < 4.0, Not required
			Top Side	0.69	0.00	0.69	∑SAR < 4.0, Not required
			Bottom Side	0.00	0.00	0.00	∑SAR < 4.0, Not required
3	LTE 2 + BT (DSS)	Extremity	Front Face	0.16	0.00	0.16	∑SAR < 4.0, Not required
			Rear Face	2.04	0.00	2.04	∑SAR < 4.0, Not required
			Left Side	0.12	0.00	0.12	∑SAR < 4.0, Not required
			Right Side	0.20	0.00	0.20	∑SAR < 4.0, Not required
			Top Side	0.35	0.00	0.35	∑SAR < 4.0, Not required
			Bottom Side	0.00	0.00	0.00	∑SAR < 4.0, Not required

No.	Conditions (SAR1 + SAR2)	Exposure Condition	Test Position	Max. SAR1	Max. SAR2	SAR Summation	SPLSR Analysis
4	LTE 4 + BT (DSS)	Extremity	Front Face	0.05	0.00	0.05	∑SAR < 4.0, Not required
			Rear Face	2.14	0.00	2.14	∑SAR < 4.0, Not required
			Left Side	0.06	0.00	0.06	∑SAR < 4.0, Not required
			Right Side	0.11	0.00	0.11	∑SAR < 4.0, Not required
			Top Side	0.31	0.00	0.31	∑SAR < 4.0, Not required
			Bottom Side	0.00	0.00	0.00	∑SAR < 4.0, Not required
5	LTE 12 + BT (DSS)	Extremity	Front Face	0.08	0.00	0.08	∑SAR < 4.0, Not required
			Rear Face	0.18	0.00	0.18	∑SAR < 4.0, Not required
			Left Side	0.07	0.00	0.07	∑SAR < 4.0, Not required
			Right Side	0.06	0.00	0.06	∑SAR < 4.0, Not required
			Top Side	0.17	0.00	0.17	∑SAR < 4.0, Not required
			Bottom Side	0.00	0.00	0.00	∑SAR < 4.0, Not required

Test Engineer：Gary Chao, and Willy Chang

5. Calibration of Test Equipment

Equipment	Manufacturer	Model	SN	Cal. Date	Cal. Interval
System Validation Dipole	SPEAG	D750V3	1013	Mar. 22, 2019	1 Year
System Validation Dipole	SPEAG	D835V2	4d121	Aug. 23, 2018	1 Year
System Validation Dipole	SPEAG	D1750V2	1055	Aug. 27, 2018	1 Year
System Validation Dipole	SPEAG	D1900V2	5d036	Jan. 25, 2019	1 Year
System Validation Dipole	SPEAG	D2450V2	737	Aug. 24, 2018	1 Year
System Validation Dipole	SPEAG	D5GHzV2	1019	Mar. 21, 2019	1 Year
Dosimetric E-Field Probe	SPEAG	EX3DV4	3971	Mar. 29, 2019	1 Year
Data Acquisition Electronics	SPEAG	DAE4	1431	Mar. 25, 2019	1 Year
Radio Communication Analyzer	Anritsu	MT8820C	6201010285	Aug. 06, 2018	1 Year
Universal Radio Communication Tester	Anritsu	MT8821C	6201502978	Jul. 20, 2018	1 Year
Spectrum Analyzer	R&S	FSL6	102006	Mar. 26, 2019	1 Year
ENA Series Network Analyzer	Agilent	E5071C	MY46104190	Apr. 16, 2019	1 Year
MXG Analong Signal Generator	Agilent	N5181A	MY50143868	Jul. 03, 2018	1 Year
Power Meter	Anritsu	ML2495A	1218009	Jul. 03, 2018	1 Year
Power Sensor	Anritsu	MA2411B	1207252	Jul. 03, 2018	1 Year
Thermometer	YFE	YF-160A	130504591	Mar. 22, 2019	1 Year

6. Measurement Uncertainty

According to KDB 865664 D01, SAR measurement uncertainty analysis is required in SAR reports only when the highest measured SAR in a frequency band is ≥ 1.5 W/kg for 1-g SAR, and ≥ 3.75 W/kg for 10-g SAR. The procedures described in IEEE Std 1528-2013 should be applied. The expanded SAR measurement uncertainty must be ≤ 30 %, for a confidence interval of k = 2. When the highest measured SAR within a frequency band is < 1.5 W/kg for 1-g and < 3.75 W/kg for 10-g, the extensive SAR measurement uncertainty analysis described in IEEE Std 1528-2013 is not required in SAR reports submitted for equipment approval. Hence, the measurement uncertainty analysis is not required in this SAR report because the test result met the condition.

7. Information of the Testing Laboratories

We, Bureau Veritas Consumer Products Services (H.K.) Ltd., Taoyuan Branch, were founded in 1988 to provide our best service in EMC, Radio, Telecom and Safety consultation. Our laboratories are accredited and approved according to ISO/IEC 17025.

If you have any comments, please feel free to contact us at the following:

Taiwan HwaYa EMC/RF/Safety/Telecom Lab:
Add: No. 19, Hwa Ya 2nd Rd, Wen Hwa Vil., Kwei Shan Hsiang, Taoyuan Hsien 333, Taiwan, R.O.C.
Tel: 886-3-318-3232
Fax: 886-3-327-0892

Taiwan LinKou EMC/RF Lab:
Add: No. 47-2, 14th Ling, Chia Pau Vil., Linkou Dist., New Taipei City 244, Taiwan, R.O.C.
Tel: 886-2-2605-2180
Fax: 886-2-2605-1924

Taiwan HsinChu EMC/RF Lab:
Add: E-2, No.1, Li Hsin 1st Road, Hsinchu Science Park, Hsinchu City 30078, Taiwan, R.O.C.
Tel: 886-3-593-5343
Fax: 886-3-593-5342

Email: service.adt@tw.bureauveritas.com
Web Site: www.bureauveritas-adt.com

The road map of all our labs can be found in our web site also.

---END---

Appendix A. SAR Plots of System Verification

The plots for system verification with largest deviation for each SAR system combination are shown as follows.

System Check_H750_190618

DUT: Dipole 750 MHz; Type: D750V3; SN: 1013

Communication System: CW; Frequency: 750 MHz;Duty Cycle: 1:1
Medium: H06T09N1_0618 Medium parameters used: f = 750 MHz; σ = 0.884 S/m; ε_r = 42.849; ρ = 1000 kg/m^3
Ambient Temperature：23.7 ℃ ; Liquid Temperature：23.4 ℃

DASY5 Configuration:
- Probe: EX3DV4 - SN3971; ConvF(10.75, 10.75, 10.75); Calibrated: 2019/03/29
- Sensor-Surface: 1.4mm (Mechanical Surface Detection)
- Electronics: DAE4 Sn1431; Calibrated: 2019/03/25
- Phantom: ELI Phantom_1043; Type: QDOVA;
- Measurement SW: DASY52, Version 52.10 (2); SEMCAD X Version 14.6.12 (7470)

Pin=250mW/Area Scan (61x81x1): Interpolated grid: dx=1.500 mm, dy=1.500 mm
Maximum value of SAR (interpolated) = 2.65 W/kg

Pin=250mW/Zoom Scan (5x5x7)/Cube 0: Measurement grid: dx=8mm, dy=8mm, dz=5mm
Reference Value = 57.61 V/m; Power Drift = -0.01 dB
Peak SAR (extrapolated) = 3.05 W/kg
SAR(1 g) = 1.99 W/kg; SAR(10 g) = 1.3 W/kg
Maximum value of SAR (measured) = 2.69 W/kg

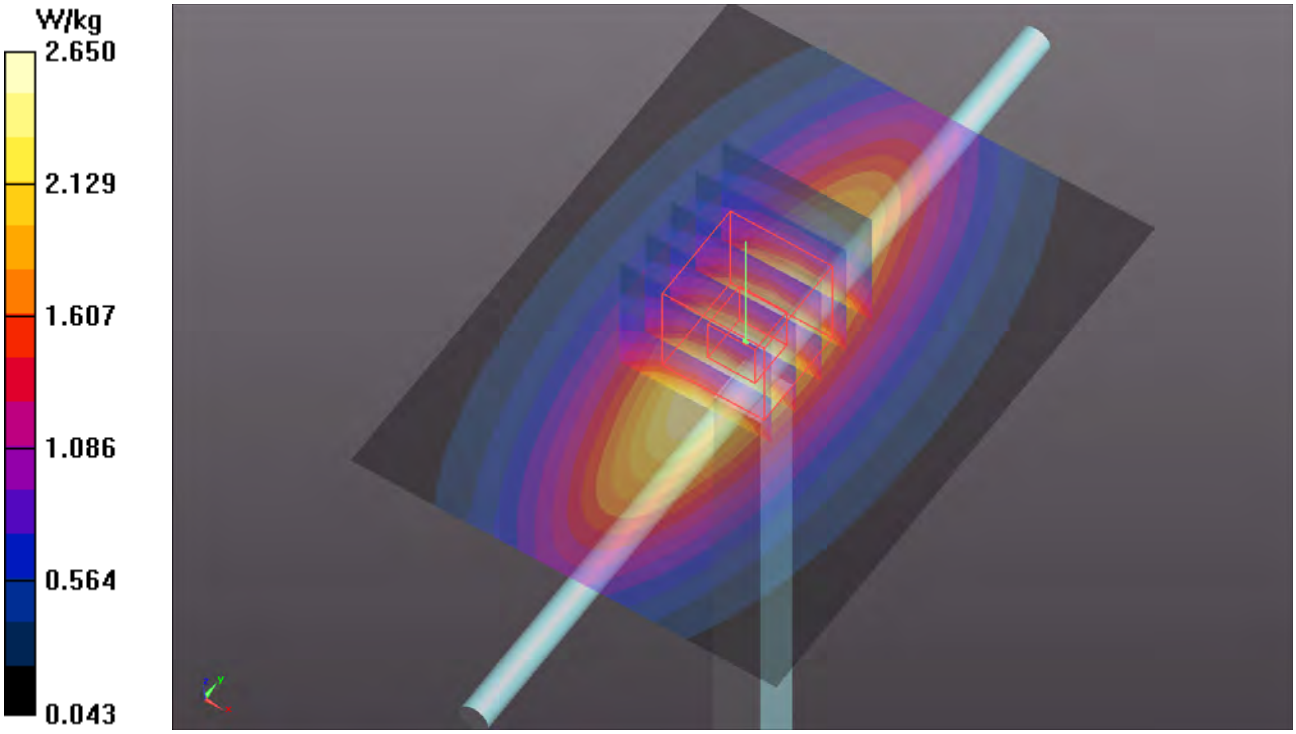

System Check_H835_190618

DUT: Dipole 835 MHz; Type: D835V2; SN: 4d121

Communication System: CW; Frequency: 835 MHz;Duty Cycle: 1:1
Medium: H07T10N2_0618 Medium parameters used: f = 835 MHz; σ = 0.918 S/m; ε_r = 42.921; ρ = 1000 kg/m^3
Ambient Temperature：23.7 ℃ ; Liquid Temperature：23.4 ℃

DASY5 Configuration:
- Probe: EX3DV4 - SN3971; ConvF(10.18, 10.18, 10.18); Calibrated: 2019/03/29
- Sensor-Surface: 1.4mm (Mechanical Surface Detection)
- Electronics: DAE4 Sn1431; Calibrated: 2019/03/25
- Phantom: ELI Phantom_1043; Type: QDOVA;
- Measurement SW: DASY52, Version 52.10 (2); SEMCAD X Version 14.6.12 (7470)

Pin=250mW/Area Scan (61x61x1): Interpolated grid: dx=1.500 mm, dy=1.500 mm
Maximum value of SAR (interpolated) = 3.28 W/kg

Pin=250mW/Zoom Scan (5x5x7)/Cube 0: Measurement grid: dx=8mm, dy=8mm, dz=5mm
Reference Value = 62.13 V/m; Power Drift = -0.01 dB
Peak SAR (extrapolated) = 3.71 W/kg
SAR(1 g) = 2.41 W/kg; SAR(10 g) = 1.56 W/kg
Maximum value of SAR (measured) = 3.27 W/kg

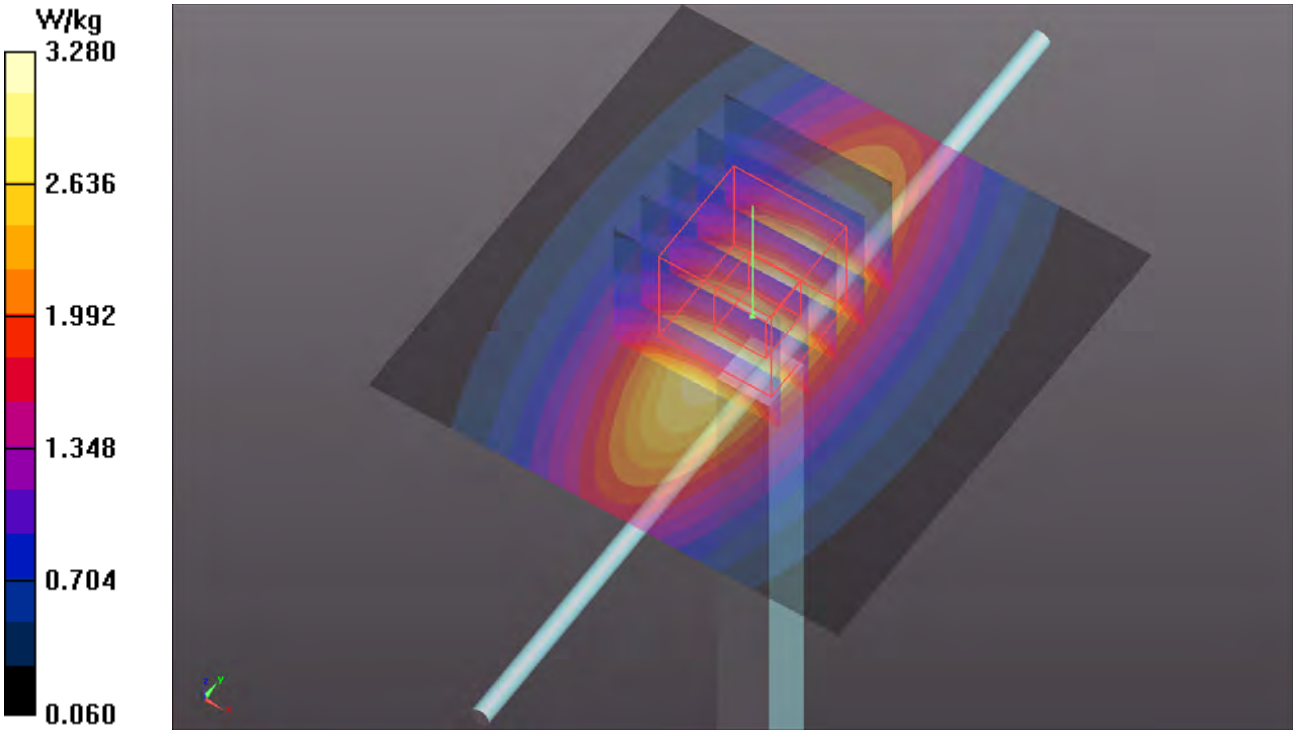

System Check_H1750_190618

DUT: Dipole 1750 MHz; Type: D1750V2; SN: 1055

Communication System: CW; Frequency: 1750 MHz;Duty Cycle: 1:1
Medium: H16T20N2_0618 Medium parameters used: f = 1750 MHz; σ = 1.326 S/m; ε_r = 40.434; ρ = 1000 kg/m^3
Ambient Temperature：23.7 ℃ ; Liquid Temperature：23.4 ℃

DASY5 Configuration:
- Probe: EX3DV4 - SN3971; ConvF(8.8, 8.8, 8.8); Calibrated: 2019/03/29
- Sensor-Surface: 1.4mm (Mechanical Surface Detection)
- Electronics: DAE4 Sn1431; Calibrated: 2019/03/25
- Phantom: ELI Phantom_1043; Type: QDOVA;
- Measurement SW: DASY52, Version 52.10 (2); SEMCAD X Version 14.6.12 (7470)

Pin=250mW/Area Scan (61x61x1): Interpolated grid: dx=1.500 mm, dy=1.500 mm
Maximum value of SAR (interpolated) = 13.9 W/kg

Pin=250mW/Zoom Scan (5x5x7)/Cube 0: Measurement grid: dx=8mm, dy=8mm, dz=5mm
Reference Value = 105.1 V/m; Power Drift = -0.02 dB
Peak SAR (extrapolated) = 16.7 W/kg
SAR(1 g) = 8.91 W/kg; SAR(10 g) = 4.71 W/kg
Maximum value of SAR (measured) = 13.9 W/kg

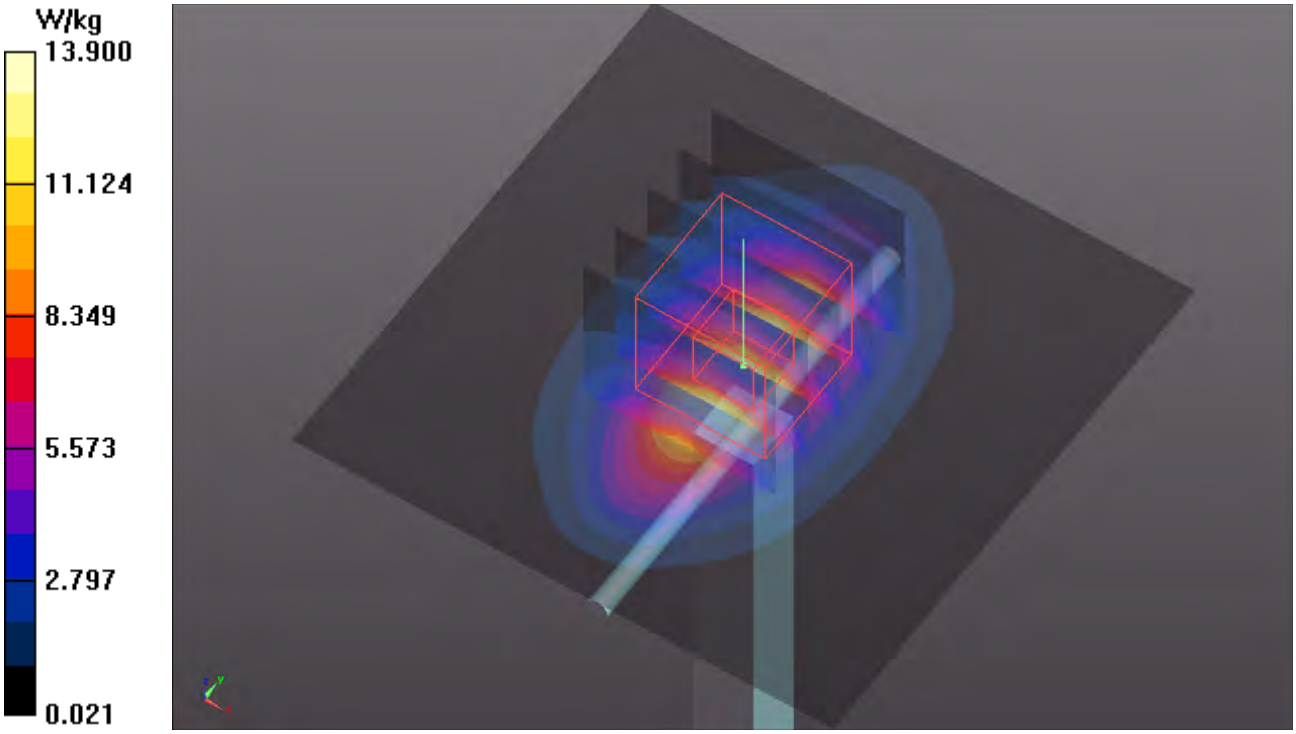

System Check_H1900_190618

DUT: Dipole 1900 MHz; Type: D1900V2; SN: 5d036

Communication System: CW; Frequency: 1900 MHz;Duty Cycle: 1:1
Medium: H16T20N2_0618 Medium parameters used: f = 1900 MHz; σ = 1.462 S/m; ε_r = 39.843; ρ = 1000 kg/m^3
Ambient Temperature：23.7 ℃ ; Liquid Temperature：23.4 ℃

DASY5 Configuration:
- Probe: EX3DV4 - SN3971; ConvF(8.47, 8.47, 8.47); Calibrated: 2019/03/29
- Sensor-Surface: 1.4mm (Mechanical Surface Detection)
- Electronics: DAE4 Sn1431; Calibrated: 2019/03/25
- Phantom: ELI Phantom_1043; Type: QDOVA;
- Measurement SW: DASY52, Version 52.10 (2); SEMCAD X Version 14.6.12 (7470)

Pin=250mW/Area Scan (61x61x1): Interpolated grid: dx=1.500 mm, dy=1.500 mm
Maximum value of SAR (interpolated) = 17.8 W/kg

Pin=250mW/Zoom Scan (5x5x7)/Cube 0: Measurement grid: dx=8mm, dy=8mm, dz=5mm
Reference Value = 102.2 V/m; Power Drift = -0.05 dB
Peak SAR (extrapolated) = 20.4 W/kg
SAR(1 g) = 10.7 W/kg; SAR(10 g) = 5.57 W/kg
Maximum value of SAR (measured) = 16.9 W/kg

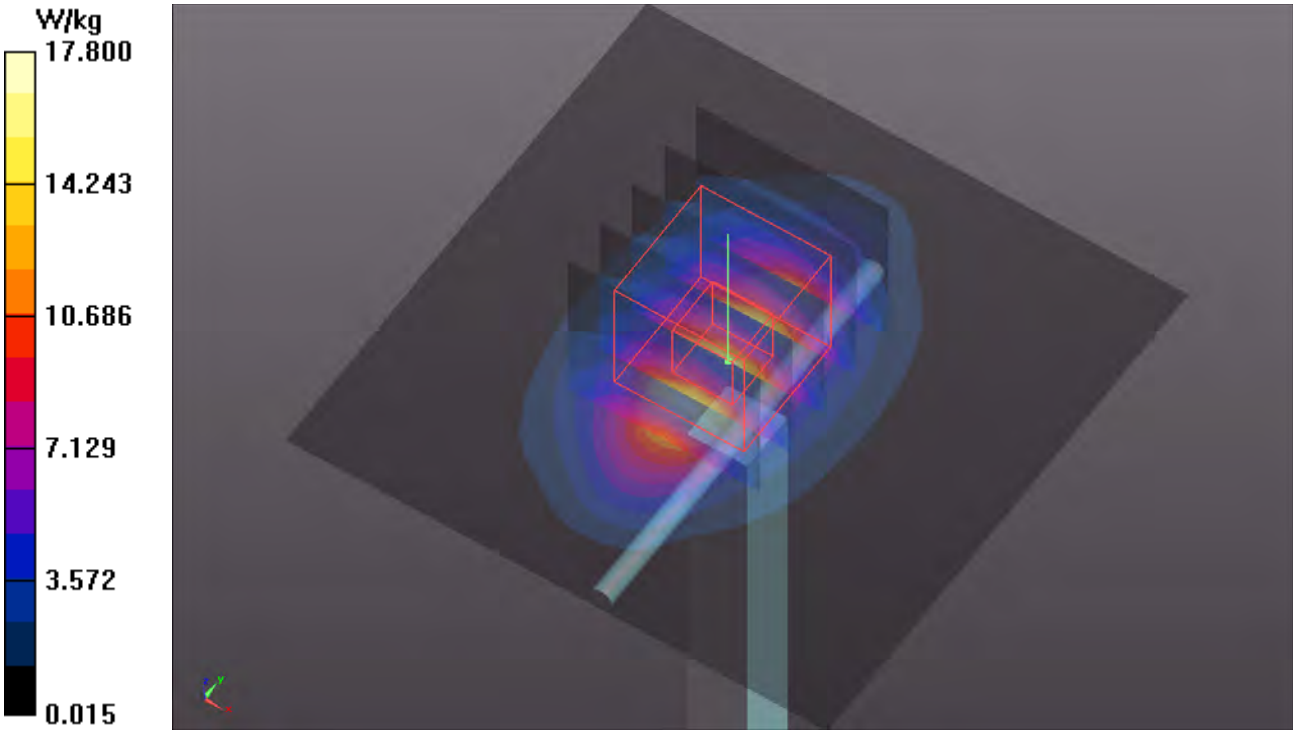

System Check_H2450_190619

DUT: Dipole 2450 MHz; Type: D2450V2; SN: 737

Communication System: CW; Frequency: 2450 MHz;Duty Cycle: 1:1
Medium: H19T27N1_0619 Medium parameters used: f = 2450 MHz; σ = 1.824 S/m; ε_r = 38.456; ρ = 1000 kg/m^3
Ambient Temperature：23.8 ℃ ; Liquid Temperature：23.6 ℃

DASY5 Configuration:
- Probe: EX3DV4 - SN3971; ConvF(7.65, 7.65, 7.65); Calibrated: 2019/03/29
- Sensor-Surface: 1.4mm (Mechanical Surface Detection)
- Electronics: DAE4 Sn1431; Calibrated: 2019/03/25
- Phantom: ELI Phantom_1043; Type: QDOVA;
- Measurement SW: DASY52, Version 52.10 (2); SEMCAD X Version 14.6.12 (7470)

Pin=250mW/Area Scan (81x81x1): Interpolated grid: dx=1.200 mm, dy=1.200 mm
Maximum value of SAR (interpolated) = 21.4 W/kg

Pin=250mW/Zoom Scan (7x7x7)/Cube 0: Measurement grid: dx=5mm, dy=5mm, dz=5mm
Reference Value = 104.3 V/m; Power Drift = -0.05 dB
Peak SAR (extrapolated) = 26.4 W/kg
SAR(1 g) = 12.7 W/kg; SAR(10 g) = 5.87 W/kg
Maximum value of SAR (measured) = 21.3 W/kg

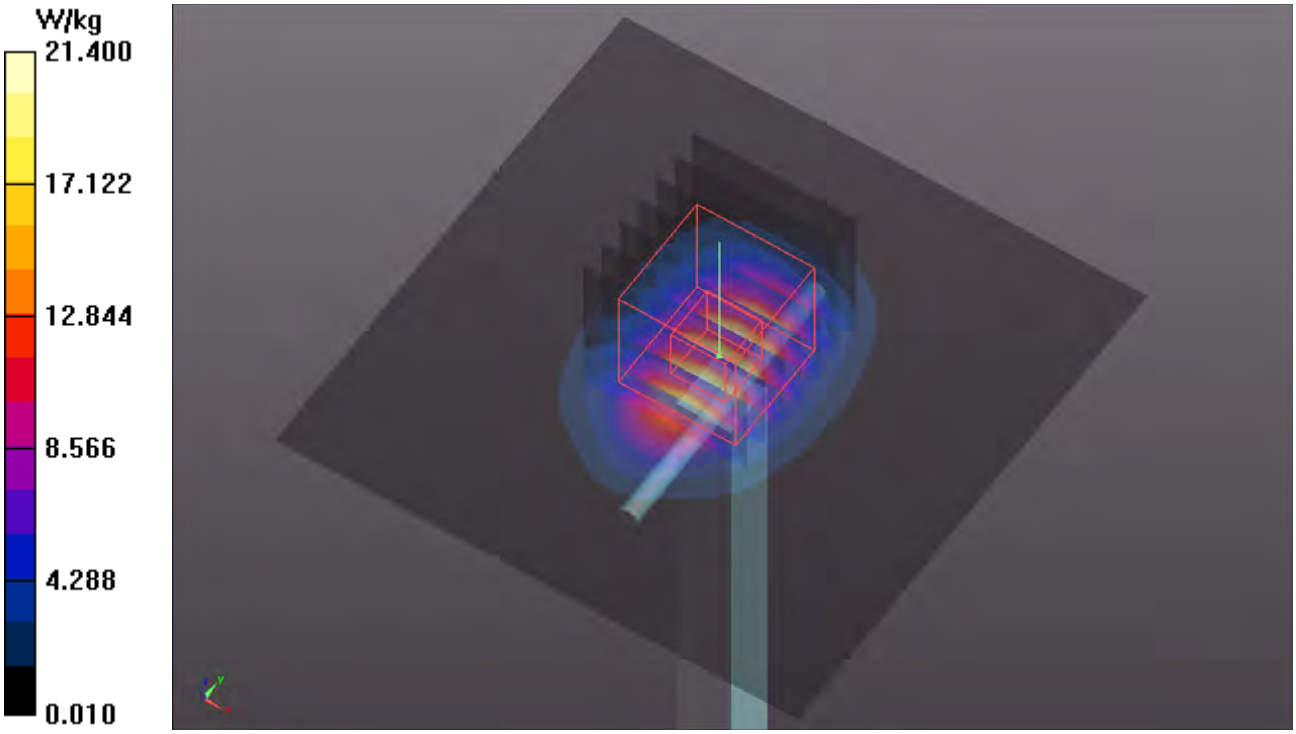

System Check_H5250_190619

DUT: Dipole 5 GHz; Type: D5GHzV2; SN: 1019

Communication System: CW; Frequency: 5250 MHz;Duty Cycle: 1:1
Medium: H34T60N2_0619 Medium parameters used: f = 5250 MHz; σ = 4.762 S/m; ε_r = 35.023; ρ = 1000 kg/m^3
Ambient Temperature：23.7 ℃ ; Liquid Temperature：23.4 ℃

DASY5 Configuration:
- Probe: EX3DV4 - SN3971; ConvF(5.12, 5.12, 5.12); Calibrated: 2019/03/29
- Sensor-Surface: 1.4mm (Mechanical Surface Detection)
- Electronics: DAE4 Sn1431; Calibrated: 2019/03/25
- Phantom: ELI Phantom_1043; Type: QDOVA;
- Measurement SW: DASY52, Version 52.10 (2); SEMCAD X Version 14.6.12 (7470)

Pin=100mW/Area Scan (91x91x1): Interpolated grid: dx=1.000 mm, dy=1.000 mm
Maximum value of SAR (interpolated) = 18.5 W/kg

Pin=100mW/Zoom Scan (7x7x12)/Cube 0: Measurement grid: dx=4mm, dy=4mm, dz=2mm
Reference Value = 71.90 V/m; Power Drift = 0.04 dB
Peak SAR (extrapolated) = 33.7 W/kg
SAR(1 g) = 8.1 W/kg; SAR(10 g) = 2.33 W/kg
Maximum value of SAR (measured) = 20.5 W/kg

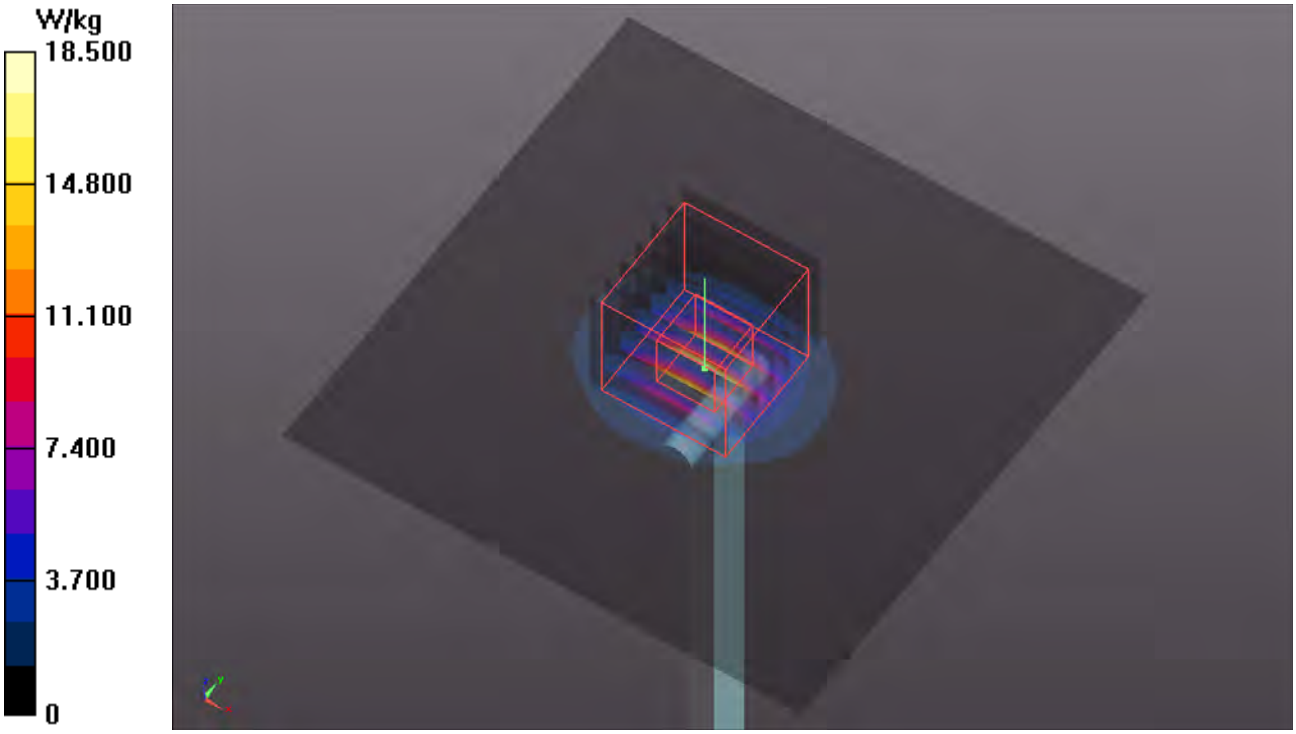

System Check_H5600_190620

DUT: Dipole 5 GHz; Type: D5GHzV2; SN: 1019

Communication System: CW; Frequency: 5600 MHz;Duty Cycle: 1:1
Medium: H34T60N2_0620 Medium parameters used: f = 5600 MHz; σ = 5.13 S/m; ε_r = 34.536; ρ = 1000 kg/m^3
Ambient Temperature：23.8 ℃ ; Liquid Temperature：23.5 ℃

DASY5 Configuration:
- Probe: EX3DV4 - SN3971; ConvF(4.78, 4.78, 4.78); Calibrated: 2019/03/29
- Sensor-Surface: 1.4mm (Mechanical Surface Detection)
- Electronics: DAE4 Sn1431; Calibrated: 2019/03/25
- Phantom: ELI Phantom_1043; Type: QDOVA;
- Measurement SW: DASY52, Version 52.10 (2); SEMCAD X Version 14.6.12 (7470)

Pin=100mW/Area Scan (91x91x1): Interpolated grid: dx=1.000 mm, dy=1.000 mm
Maximum value of SAR (interpolated) = 22.1 W/kg

Pin=100mW/Zoom Scan (7x7x12)/Cube 0: Measurement grid: dx=4mm, dy=4mm, dz=2mm
Reference Value = 74.38 V/m; Power Drift = -0.14 dB
Peak SAR (extrapolated) = 41.7 W/kg
SAR(1 g) = 9.01 W/kg; SAR(10 g) = 2.57 W/kg
Maximum value of SAR (measured) = 23.5 W/kg

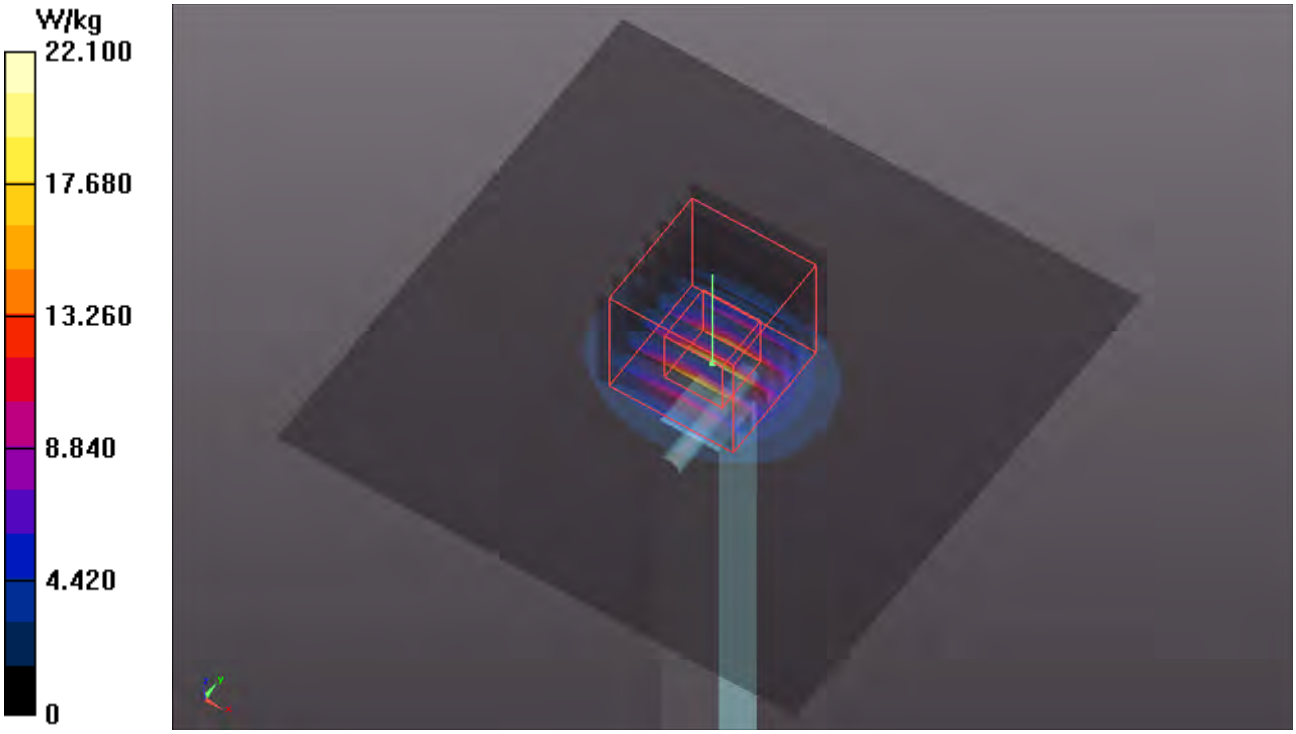

System Check_H5750_190620

DUT: Dipole 5 GHz; Type: D5GHzV2; SN: 1019

Communication System: CW; Frequency: 5750 MHz;Duty Cycle: 1:1
Medium: H34T60N2_0620 Medium parameters used: f = 5750 MHz; σ = 5.278 S/m; ε_r = 34.377; ρ = 1000 kg/m^3
Ambient Temperature：23.8 ℃ ; Liquid Temperature：23.5 ℃

DASY5 Configuration:
- Probe: EX3DV4 - SN3971; ConvF(4.92, 4.92, 4.92); Calibrated: 2019/03/29
- Sensor-Surface: 1.4mm (Mechanical Surface Detection)
- Electronics: DAE4 Sn1431; Calibrated: 2019/03/25
- Phantom: ELI Phantom_1043; Type: QDOVA;
- Measurement SW: DASY52, Version 52.10 (2); SEMCAD X Version 14.6.12 (7470)

Pin=100mW/Area Scan (91x91x1): Interpolated grid: dx=1.000 mm, dy=1.000 mm
Maximum value of SAR (interpolated) = 19.5 W/kg

Pin=100mW/Zoom Scan (7x7x12)/Cube 0: Measurement grid: dx=4mm, dy=4mm, dz=2mm
Reference Value = 60.51 V/m; Power Drift = -0.07 dB
Peak SAR (extrapolated) = 37.0 W/kg
SAR(1 g) = 8.02 W/kg; SAR(10 g) = 2.29 W/kg
Maximum value of SAR (measured) = 20.9 W/kg

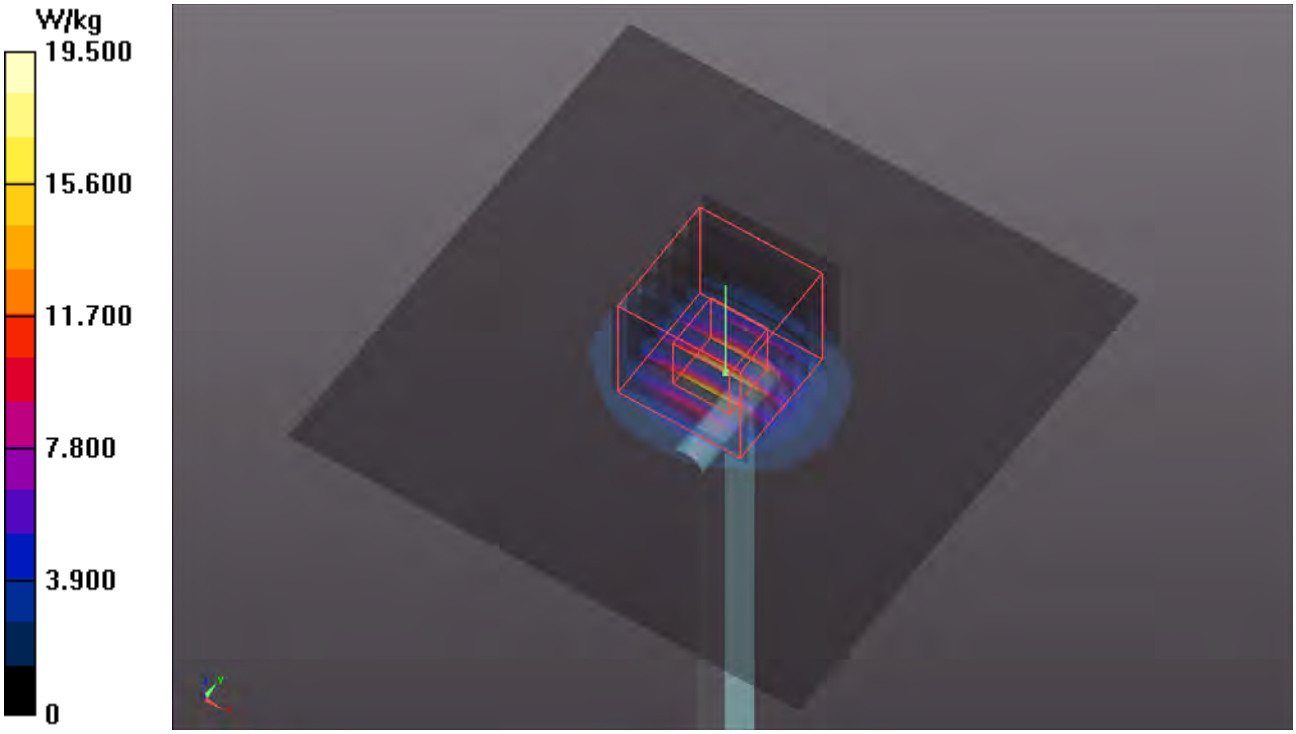

Appendix B. SAR Plots of SAR Measurement

The SAR plots for highest measured SAR in each exposure configuration, wireless mode and frequency band combination, and measured SAR > 1.5 W/kg are shown as follows.

P01 WCDMA II_RMC12.2K_Rear Face_0mm_Ch9538

DUT: 190516E08

Communication System: WCDMA; Frequency: 1907.6 MHz;Duty Cycle: 1:1
Medium: H16T20N2_0618 Medium parameters used: f = 1908 MHz; σ = 1.469 S/m; ε_r = 39.812; ρ = 1000 kg/m^3
Ambient Temperature：23.7 ℃ ; Liquid Temperature：23.4 ℃

DASY5 Configuration:
- Probe: EX3DV4 - SN3971; ConvF(8.47, 8.47, 8.47); Calibrated: 2019/03/29
- Sensor-Surface: 1.4mm (Mechanical Surface Detection)
- Electronics: DAE4 Sn1431; Calibrated: 2019/03/25
- Phantom: ELI Phantom_1043; Type: QDOVA;
- Measurement SW: DASY52, Version 52.10 (2); SEMCAD X Version 14.6.12 (7470)

- Area Scan (111x81x1): Interpolated grid: dx=1.500 mm, dy=1.500 mm
Maximum value of SAR (interpolated) = 6.59 W/kg

- Zoom Scan (5x5x7)/Cube 0: Measurement grid: dx=8mm, dy=8mm, dz=5mm
Reference Value = 49.42 V/m; Power Drift = 0.05 dB
Peak SAR (extrapolated) = 5.77 W/kg
SAR(1 g) = 3.26 W/kg; SAR(10 g) = 1.73 W/kg
Maximum value of SAR (measured) = 4.79 W/kg

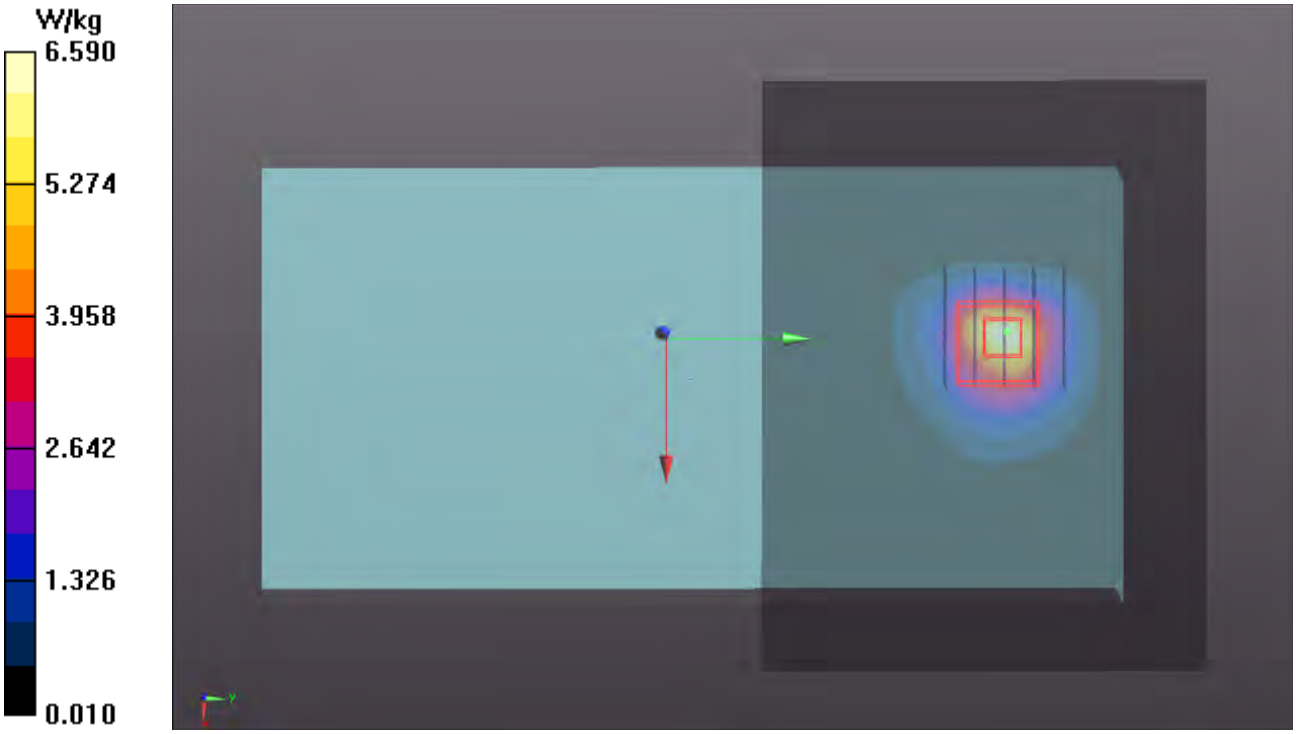

P02 WCDMA V_RMC12.2K_Rear Face_0mm_Ch4182

DUT: 190516E08

Communication System: WCDMA; Frequency: 836.4 MHz;Duty Cycle: 1:1
Medium: H07T10N2_0618 Medium parameters used: f = 836.4 MHz; σ = 0.92 S/m; ε_r = 42.904; ρ = 1000 kg/m^3
Ambient Temperature：23.7 ℃ ; Liquid Temperature：23.4 ℃

DASY5 Configuration:
- Probe: EX3DV4 - SN3971; ConvF(10.18, 10.18, 10.18); Calibrated: 2019/03/29
- Sensor-Surface: 1.4mm (Mechanical Surface Detection)
- Electronics: DAE4 Sn1431; Calibrated: 2019/03/25
- Phantom: ELI Phantom_1043; Type: QDOVA;
- Measurement SW: DASY52, Version 52.10 (2); SEMCAD X Version 14.6.12 (7470)

- Area Scan (111x81x1): Interpolated grid: dx=1.500 mm, dy=1.500 mm
Maximum value of SAR (interpolated) = 1.35 W/kg

- Zoom Scan (5x5x7)/Cube 0: Measurement grid: dx=8mm, dy=8mm, dz=5mm
Reference Value = 36.50 V/m; Power Drift = -0.05 dB
Peak SAR (extrapolated) = 1.54 W/kg
SAR(1 g) = 0.995 W/kg; SAR(10 g) = 0.625 W/kg
Maximum value of SAR (measured) = 1.29 W/kg

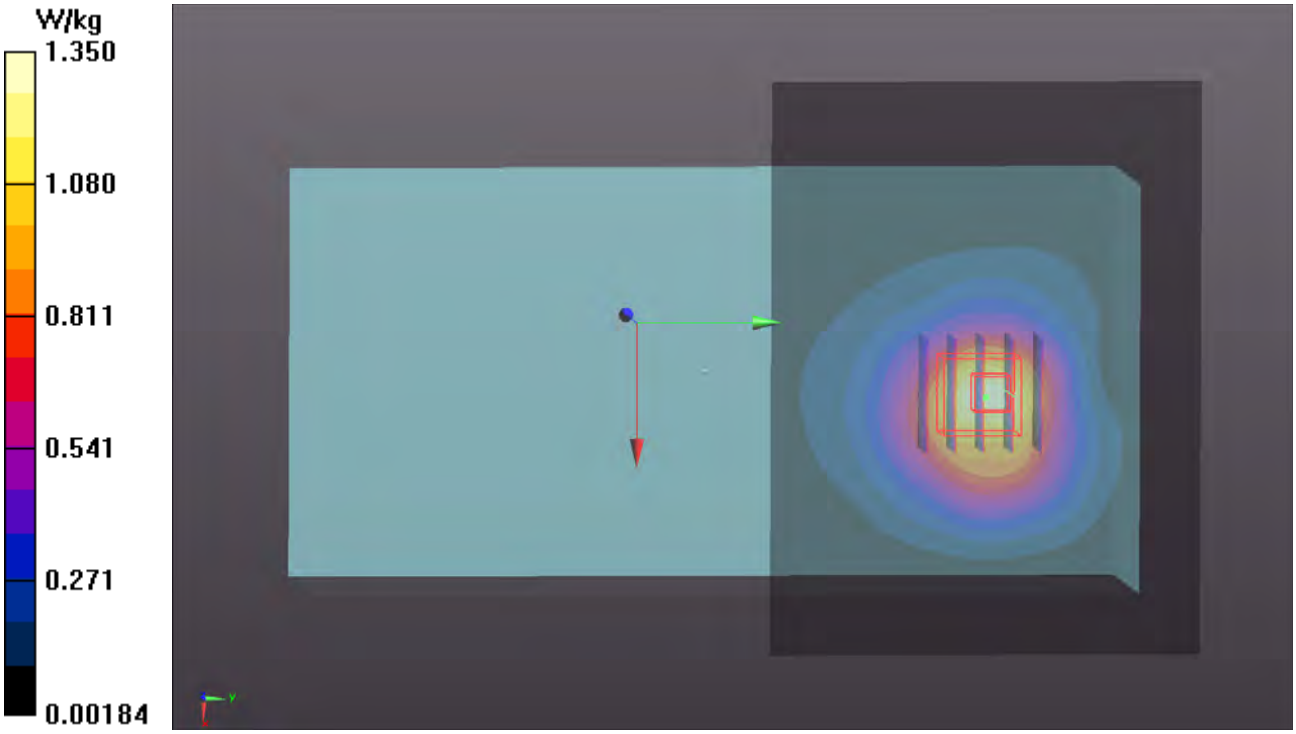

P03 LTE 2_QPSAK20M_Rear Face_0mm_Ch18700_1RB_OS0

DUT: 190516E08

Communication System: LTE; Frequency: 1860 MHz;Duty Cycle: 1:1
Medium: H16T20N2_0618 Medium parameters used: f = 1860 MHz; σ = 1.426 S/m; ε_r = 39.991; ρ = 1000 kg/m^3
Ambient Temperature：23.7 ℃ ; Liquid Temperature：23.4 ℃

DASY5 Configuration:
- Probe: EX3DV4 - SN3971; ConvF(8.47, 8.47, 8.47); Calibrated: 2019/03/29
- Sensor-Surface: 1.4mm (Mechanical Surface Detection)
- Electronics: DAE4 Sn1431; Calibrated: 2019/03/25
- Phantom: ELI Phantom_1043; Type: QDOVA;
- Measurement SW: DASY52, Version 52.10 (2); SEMCAD X Version 14.6.12 (7470)

- Area Scan (111x81x1): Interpolated grid: dx=1.500 mm, dy=1.500 mm
Maximum value of SAR (interpolated) = 5.99 W/kg

- Zoom Scan (5x5x7)/Cube 0: Measurement grid: dx=8mm, dy=8mm, dz=5mm
Reference Value = 58.38 V/m; Power Drift = -0.04 dB
Peak SAR (extrapolated) = 6.57 W/kg
SAR(1 g) = 3.76 W/kg; SAR(10 g) = 2.02 W/kg
Maximum value of SAR (measured) = 5.43 W/kg

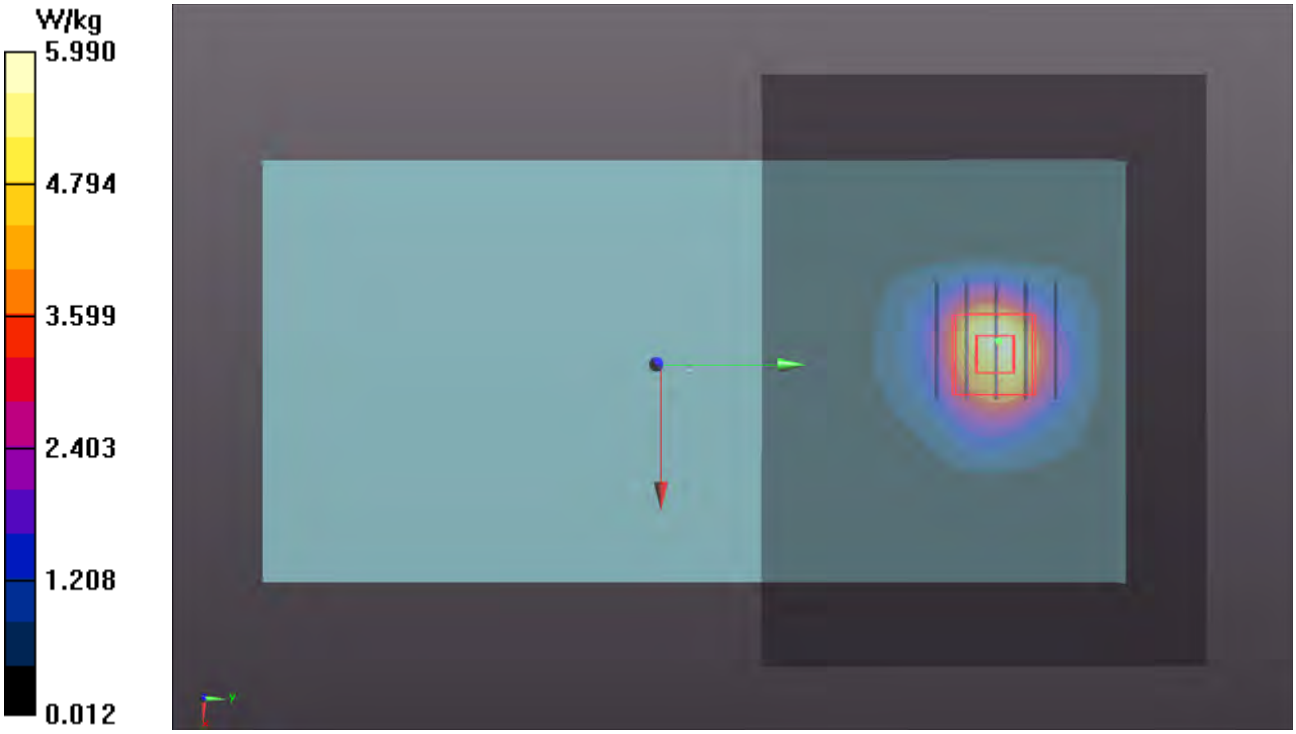

P04 LTE 4_QPSAK20M_Rear Face_0mm_Ch20050_1RB_OS0

DUT: 190516E08

Communication System: LTE; Frequency: 1720 MHz;Duty Cycle: 1:1
Medium: H16T20N2_0618 Medium parameters used: f = 1720 MHz; σ = 1.297 S/m; ε_r = 40.55; ρ = 1000 kg/m^3
Ambient Temperature：23.7 ℃ ; Liquid Temperature：23.4 ℃

DASY5 Configuration:
- Probe: EX3DV4 - SN3971; ConvF(8.8, 8.8, 8.8); Calibrated: 2019/03/29
- Sensor-Surface: 1.4mm (Mechanical Surface Detection)
- Electronics: DAE4 Sn1431; Calibrated: 2019/03/25
- Phantom: ELI Phantom_1043; Type: QDOVA;
- Measurement SW: DASY52, Version 52.10 (2); SEMCAD X Version 14.6.12 (7470)

- Area Scan (111x81x1): Interpolated grid: dx=1.500 mm, dy=1.500 mm
Maximum value of SAR (interpolated) = 6.45 W/kg

- Zoom Scan (5x5x7)/Cube 0: Measurement grid: dx=8mm, dy=8mm, dz=5mm
Reference Value = 58.97 V/m; Power Drift = -0.11 dB
Peak SAR (extrapolated) = 6.81 W/kg
SAR(1 g) = 3.92 W/kg; SAR(10 g) = 2.12 W/kg
Maximum value of SAR (measured) = 5.48 W/kg

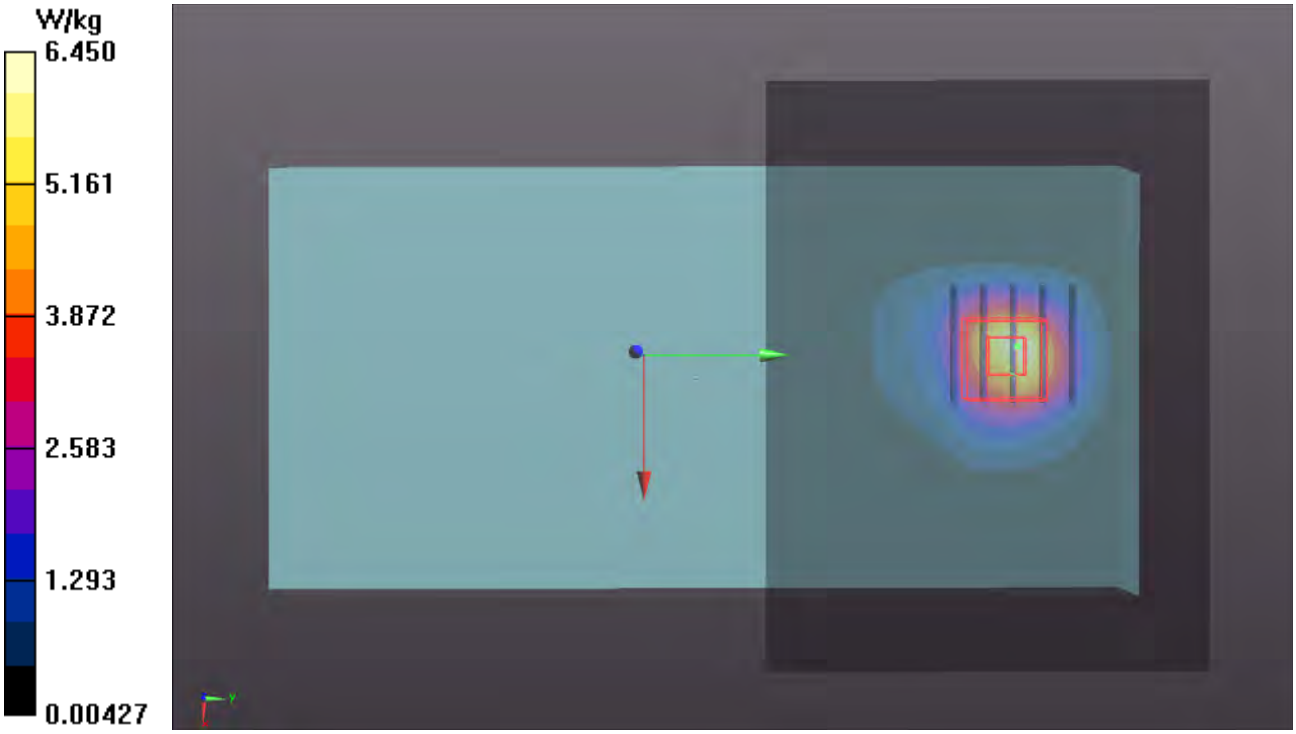

P05 LTE 12_QPSAK10M_Rear Face_0mm_Ch23130_1RB_OS0

DUT: 190516E08

Communication System: LTE; Frequency: 711 MHz;Duty Cycle: 1:1
Medium: H06T09N1_0618 Medium parameters used: f = 711 MHz; σ = 0.85 S/m; ε_r = 43.384; ρ = 1000 kg/m^3
Ambient Temperature：23.7 ℃ ; Liquid Temperature：23.4 ℃

DASY5 Configuration:
- Probe: EX3DV4 - SN3971; ConvF(10.75, 10.75, 10.75); Calibrated: 2019/03/29
- Sensor-Surface: 1.4mm (Mechanical Surface Detection)
- Electronics: DAE4 Sn1431; Calibrated: 2019/03/25
- Phantom: ELI Phantom_1043; Type: QDOVA;
- Measurement SW: DASY52, Version 52.10 (2); SEMCAD X Version 14.6.12 (7470)

- Area Scan (111x81x1): Interpolated grid: dx=1.500 mm, dy=1.500 mm
Maximum value of SAR (interpolated) = 0.425 W/kg

- Zoom Scan (5x5x7)/Cube 0: Measurement grid: dx=8mm, dy=8mm, dz=5mm
Reference Value = 22.76 V/m; Power Drift = -0.19 dB
Peak SAR (extrapolated) = 0.560 W/kg
SAR(1 g) = 0.278 W/kg; SAR(10 g) = 0.157 W/kg
Maximum value of SAR (measured) = 0.417 W/kg

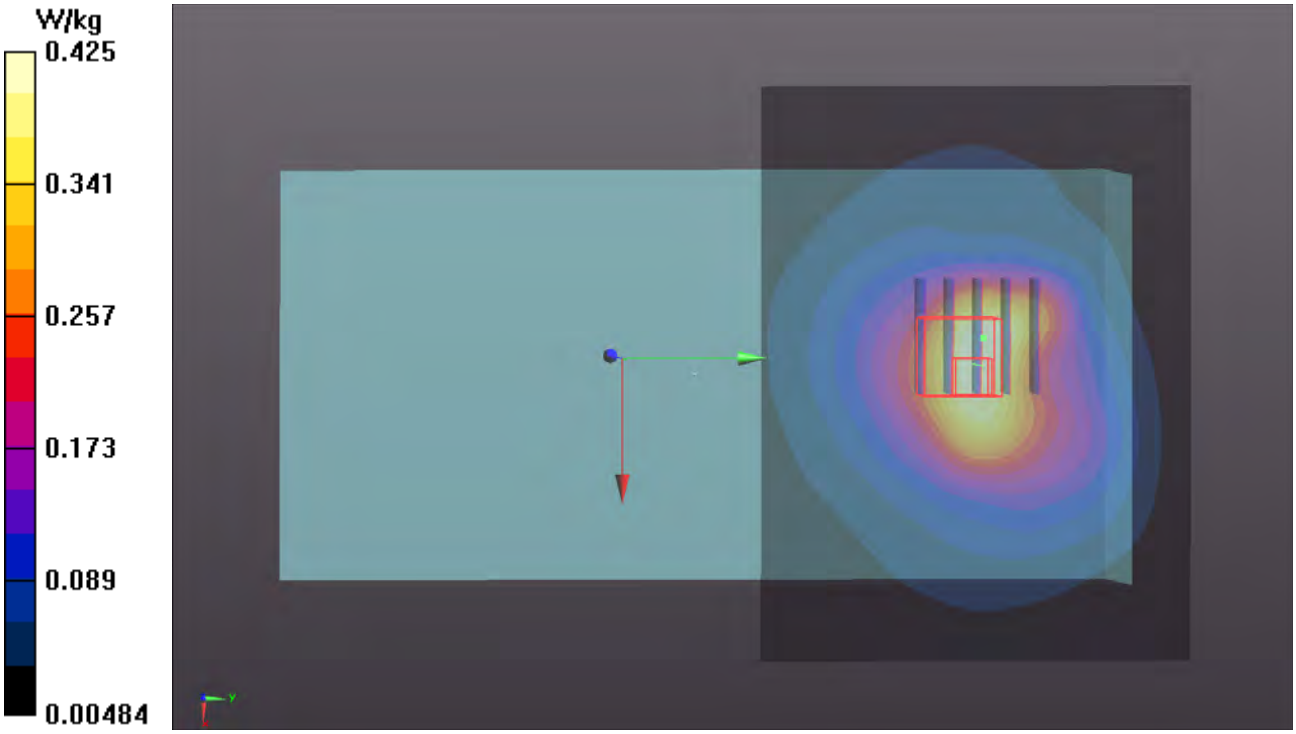

P06 WLAN2.4G_802.11b_Right Side_0mm_Ch11

DUT: 190516E08

Communication System: WLAN_2.4G; Frequency: 2462 MHz;Duty Cycle: 1:1.02
Medium: H19T27N1_0619 Medium parameters used: f = 2462 MHz; σ = 1.835 S/m; ε_r = 38.411; ρ = 1000 kg/m^3
Ambient Temperature：23.8 ℃ ; Liquid Temperature：23.6 ℃

DASY5 Configuration:
- Probe: EX3DV4 - SN3971; ConvF(7.65, 7.65, 7.65); Calibrated: 2019/03/29
- Sensor-Surface: 1.4mm (Mechanical Surface Detection)
- Electronics: DAE4 Sn1431; Calibrated: 2019/03/25
- Phantom: ELI Phantom_1043; Type: QDOVA;
- Measurement SW: DASY52, Version 52.10 (2); SEMCAD X Version 14.6.12 (7470)

- Area Scan (121x101x1): Interpolated grid: dx=1.200 mm, dy=1.200 mm
Maximum value of SAR (interpolated) = 0.664 W/kg

- Zoom Scan (5x5x7)/Cube 0: Measurement grid: dx=8mm, dy=8mm, dz=5mm
Reference Value = 18.69 V/m; Power Drift = -0.09 dB
Peak SAR (extrapolated) = 0.822 W/kg
SAR(1 g) = 0.425 W/kg; SAR(10 g) = 0.225 W/kg
Maximum value of SAR (measured) = 0.661 W/kg

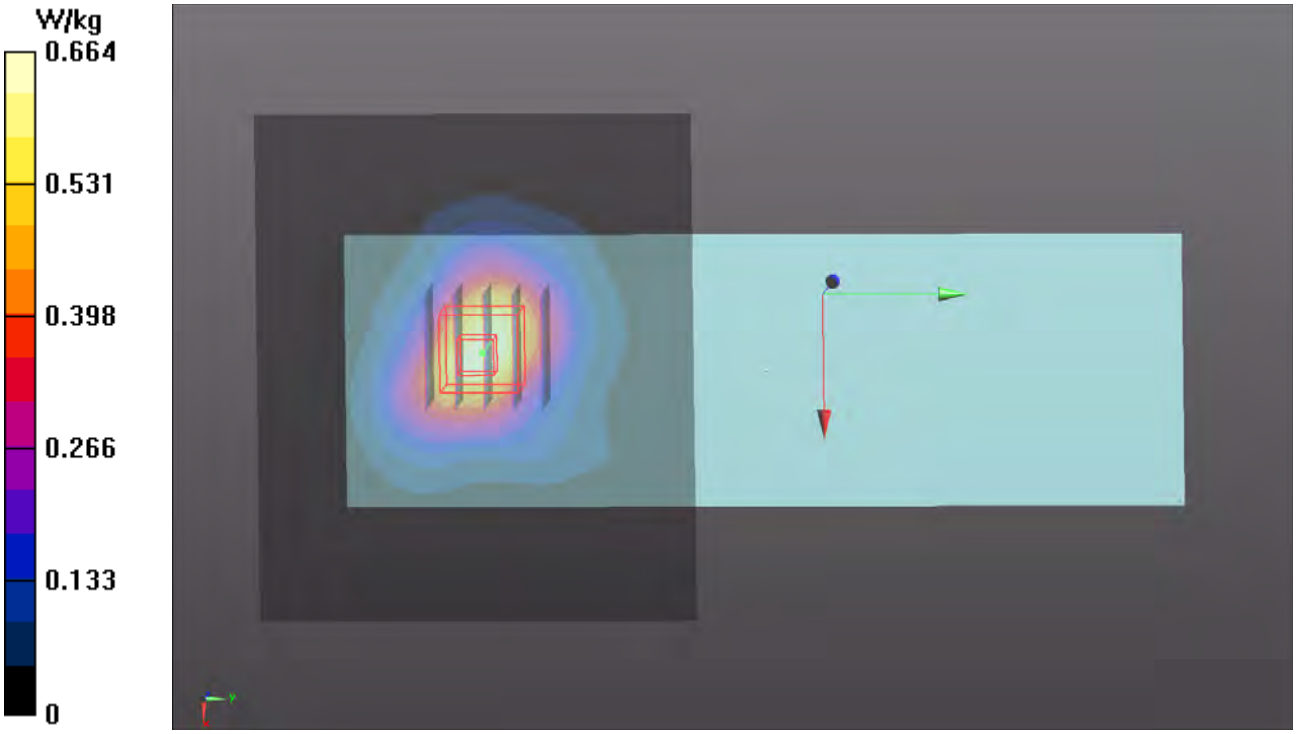

P07 WLAN5.3G_802.11a_Right Side_0mm_Ch60

DUT: 190516E08

Communication System: WLAN_5G; Frequency: 5300 MHz;Duty Cycle: 1:1.14
Medium: H34T60N2_0619 Medium parameters used: f = 5300 MHz; σ = 4.815 S/m; ε_r = 34.981; ρ = 1000 kg/m^3
Ambient Temperature：23.8 ℃ ; Liquid Temperature：23.6 ℃

DASY5 Configuration:
- Probe: EX3DV4 - SN3971; ConvF(5.12, 5.12, 5.12); Calibrated: 2019/03/29
- Sensor-Surface: 1.4mm (Mechanical Surface Detection)
- Electronics: DAE4 Sn1431; Calibrated: 2019/03/25
- Phantom: ELI Phantom_1043; Type: QDOVA;
- Measurement SW: DASY52, Version 52.10 (2); SEMCAD X Version 14.6.12 (7470)

- Area Scan (141x121x1): Interpolated grid: dx=1.000 mm, dy=1.000 mm
Maximum value of SAR (interpolated) = 1.11 W/kg

- Zoom Scan (6x6x12)/Cube 0: Measurement grid: dx=5mm, dy=5mm, dz=2mm
Reference Value = 16.25 V/m; Power Drift = -0.16 dB
Peak SAR (extrapolated) = 1.77 W/kg
SAR(1 g) = 0.503 W/kg; SAR(10 g) = 0.214 W/kg
Maximum value of SAR (measured) = 1.06 W/kg

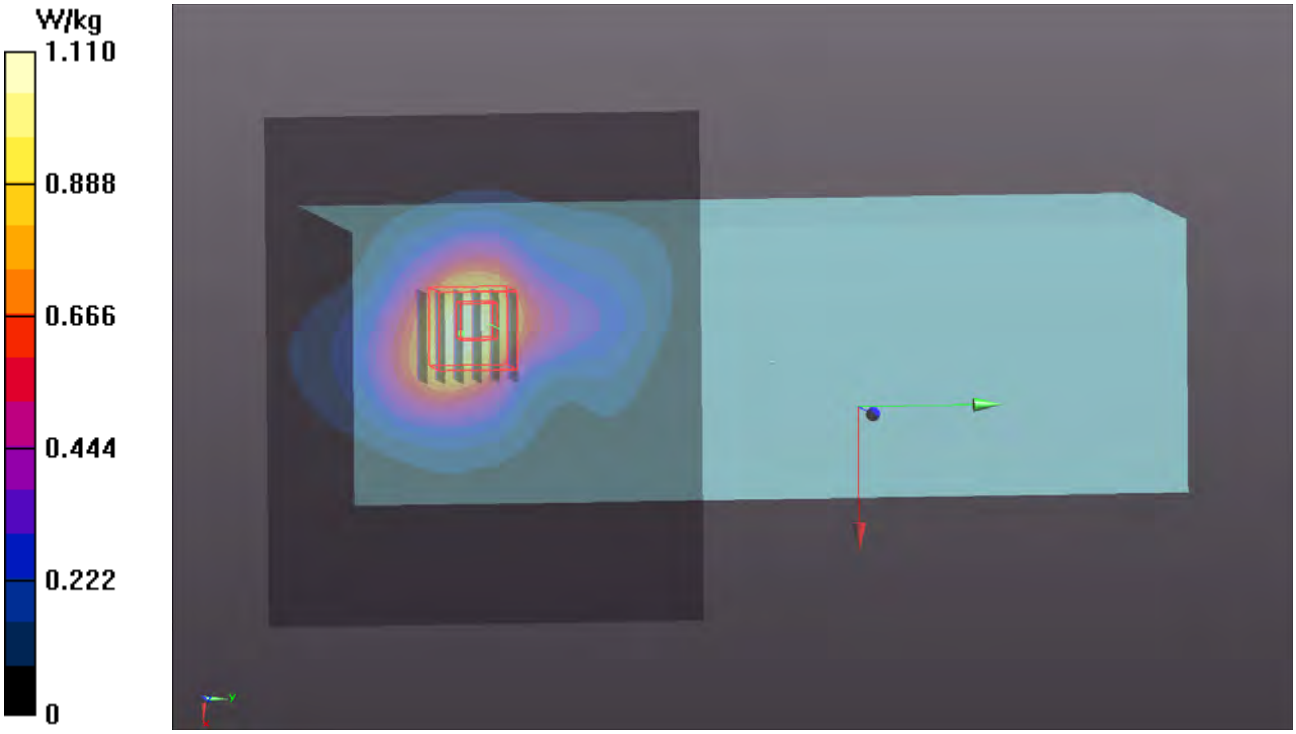

P08 WLAN5.6G_802.11a_Right Side_0mm_Ch132

DUT: 190516E08

Communication System: WLAN_5G; Frequency: 5660 MHz;Duty Cycle: 1:1.14
Medium: H34T60N2_0620 Medium parameters used: f = 5660 MHz; σ = 5.172 S/m; ε_r = 34.468; ρ = 1000 kg/m^3
Ambient Temperature：23.8 ℃ ; Liquid Temperature：23.5 ℃

DASY5 Configuration:
- Probe: EX3DV4 - SN3971; ConvF(4.78, 4.78, 4.78); Calibrated: 2019/03/29
- Sensor-Surface: 1.4mm (Mechanical Surface Detection)
- Electronics: DAE4 Sn1431; Calibrated: 2019/03/25
- Phantom: ELI Phantom_1043; Type: QDOVA;
- Measurement SW: DASY52, Version 52.10 (2); SEMCAD X Version 14.6.12 (7470)

- Area Scan (141x121x1): Interpolated grid: dx=1.000 mm, dy=1.000 mm
Maximum value of SAR (interpolated) = 2.57 W/kg

- Zoom Scan (6x6x12)/Cube 0: Measurement grid: dx=5mm, dy=5mm, dz=2mm
Reference Value = 24.56 V/m; Power Drift = -0.15 dB
Peak SAR (extrapolated) = 4.54 W/kg
SAR(1 g) = 1.16 W/kg; SAR(10 g) = 0.471 W/kg
Maximum value of SAR (measured) = 2.57 W/kg

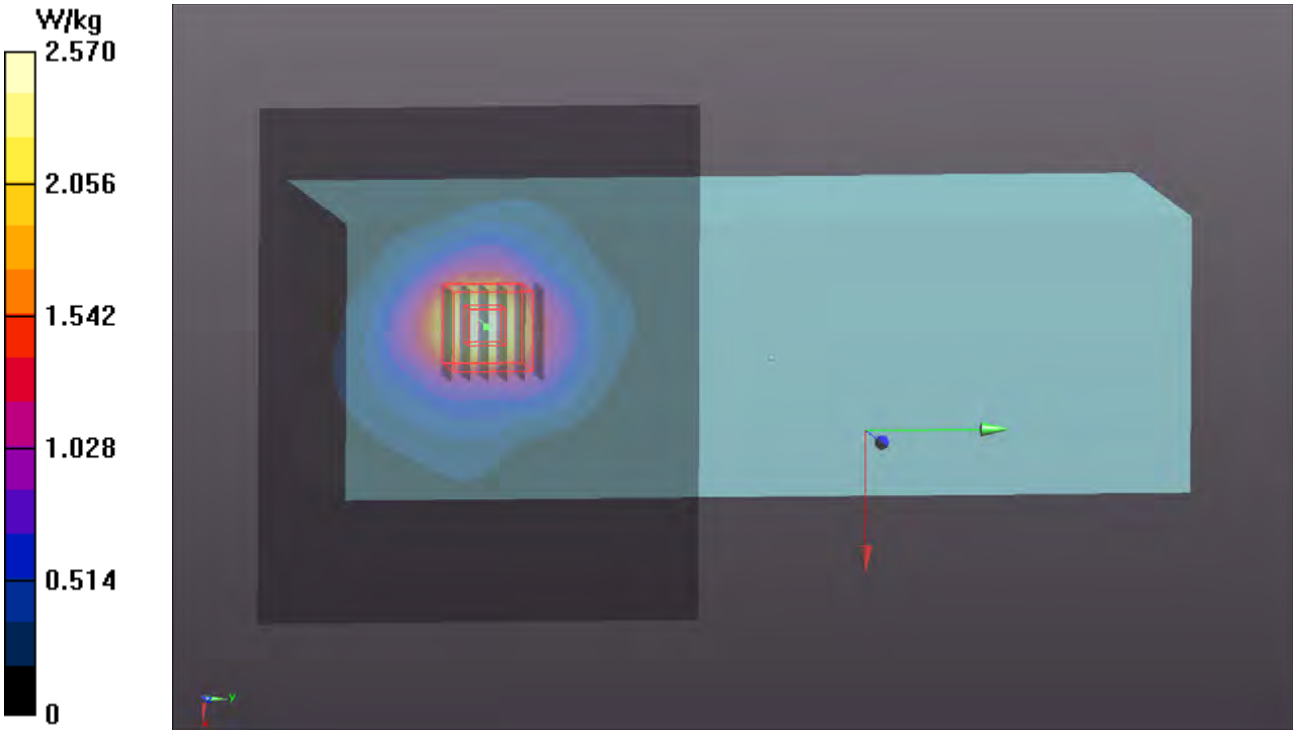

P09 WLAN5.8G_802.11a_Right Side_0mm_Ch149

DUT: 190516E08

Communication System: WLAN_5G; Frequency: 5745 MHz;Duty Cycle: 1:1.14
Medium: H34T60N2_0620 Medium parameters used: f = 5745 MHz; σ = 5.272 S/m; ε_r = 34.385; ρ = 1000 kg/m^3
Ambient Temperature：23.8 ℃ ; Liquid Temperature：23.5 ℃

DASY5 Configuration:
- Probe: EX3DV4 - SN3971; ConvF(4.92, 4.92, 4.92); Calibrated: 2019/03/29
- Sensor-Surface: 1.4mm (Mechanical Surface Detection)
- Electronics: DAE4 Sn1431; Calibrated: 2019/03/25
- Phantom: ELI Phantom_1043; Type: QDOVA;
- Measurement SW: DASY52, Version 52.10 (2); SEMCAD X Version 14.6.12 (7470)

- Area Scan (141x121x1): Interpolated grid: dx=1.000 mm, dy=1.000 mm
Maximum value of SAR (interpolated) = 2.39 W/kg

- Zoom Scan (6x6x12)/Cube 0: Measurement grid: dx=5mm, dy=5mm, dz=2mm
Reference Value = 21.55 V/m; Power Drift = 0.01 dB
Peak SAR (extrapolated) = 3.99 W/kg
SAR(1 g) = 1.03 W/kg; SAR(10 g) = 0.442 W/kg
Maximum value of SAR (measured) = 2.25 W/kg

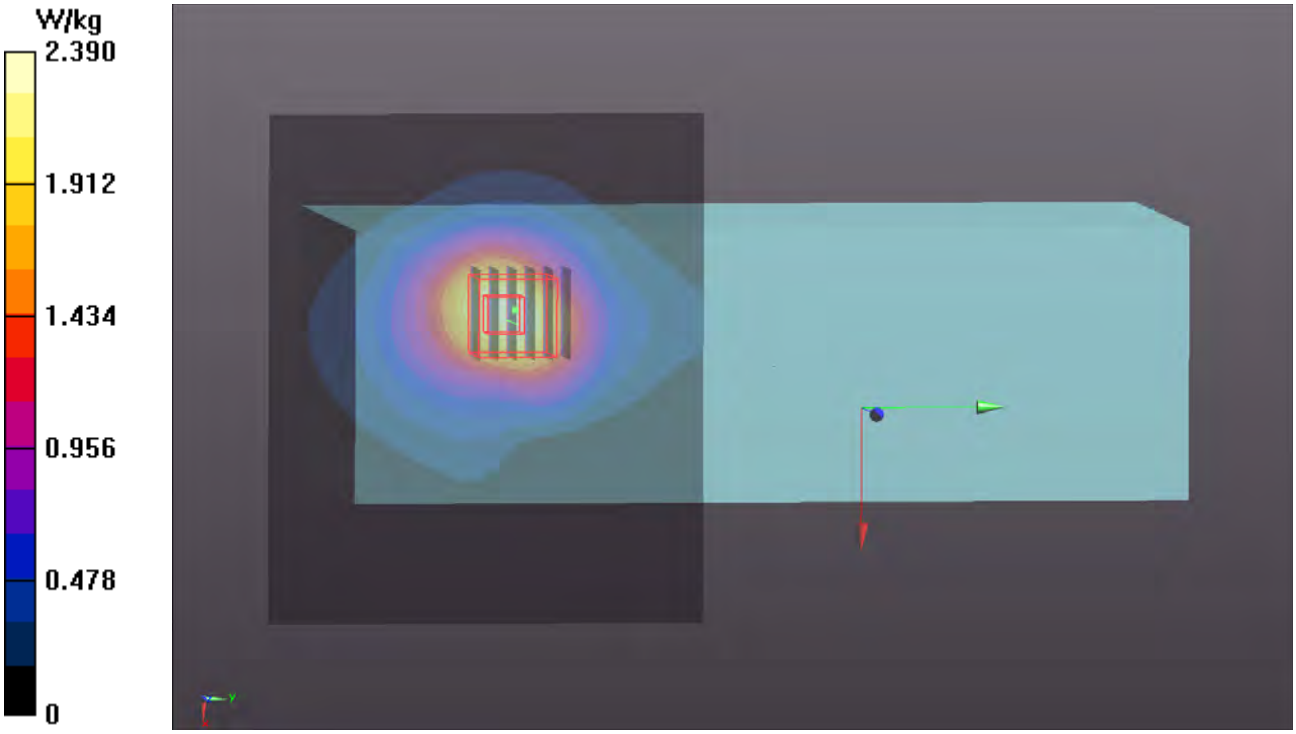

P10 BT_LE_Right Side_0mm_Ch39

DUT: 190516E08

Communication System: BT; Frequency: 2480 MHz;Duty Cycle: 1:1.57
Medium: H19T27N1_0619 Medium parameters used: f = 2480 MHz; σ = 1.85 S/m; ε_r = 38.341; ρ = 1000 kg/m^3
Ambient Temperature：23.8 ℃ ; Liquid Temperature：23.6 ℃

DASY5 Configuration:
- Probe: EX3DV4 - SN3971; ConvF(7.65, 7.65, 7.65); Calibrated: 2019/03/29
- Sensor-Surface: 1.4mm (Mechanical Surface Detection)
- Electronics: DAE4 Sn1431; Calibrated: 2019/03/25
- Phantom: ELI Phantom_1043; Type: QDOVA;
- Measurement SW: DASY52, Version 52.10 (2); SEMCAD X Version 14.6.12 (7470)

- Area Scan (121x121x1): Interpolated grid: dx=1.200 mm, dy=1.200 mm
Maximum value of SAR (interpolated) = 0.0140 W/kg
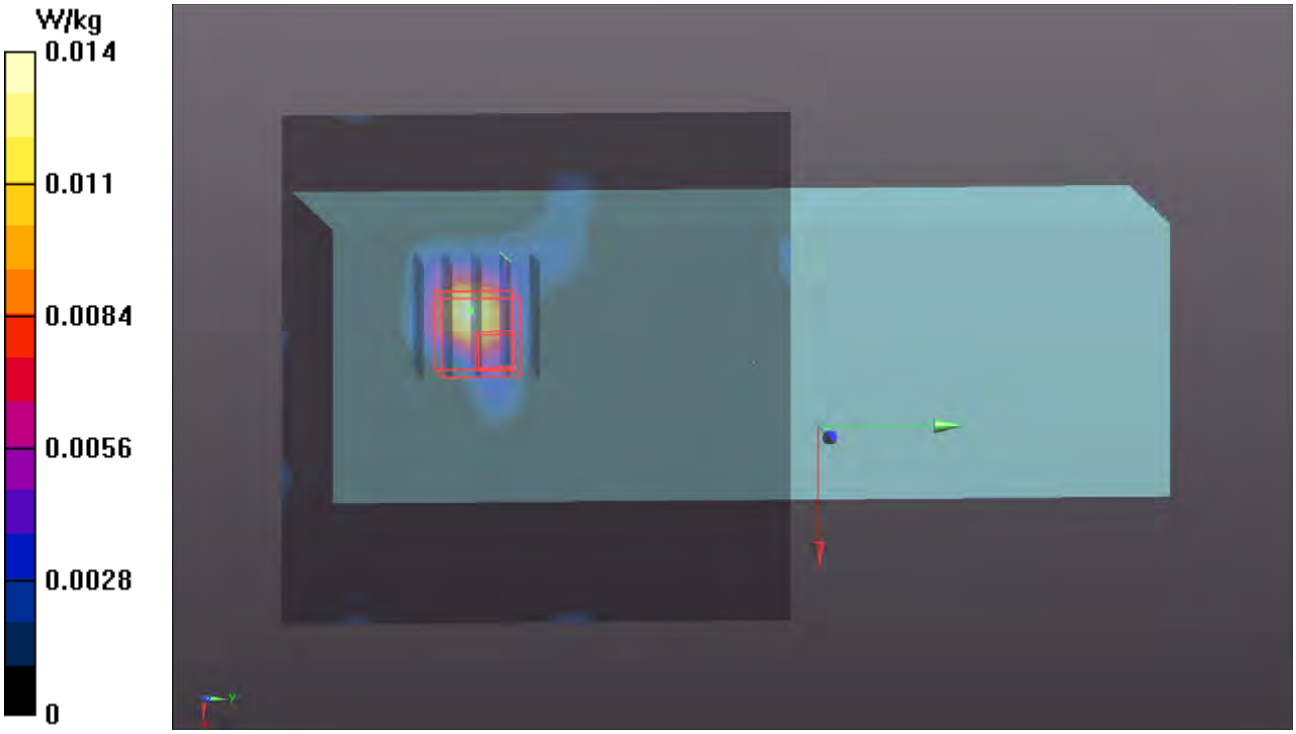
- Zoom Scan (5x5x7)/Cube 0: Measurement grid: dx=8mm, dy=8mm, dz=5mm
Reference Value = 2.115 V/m; Power Drift = -0.09 dB
Peak SAR (extrapolated) = 0.0110 W/kg
SAR(1 g) = 0.00404 W/kg; SAR(10 g) = 0.00153 W/kg
Maximum value of SAR (measured) = 0.00884 W/kg