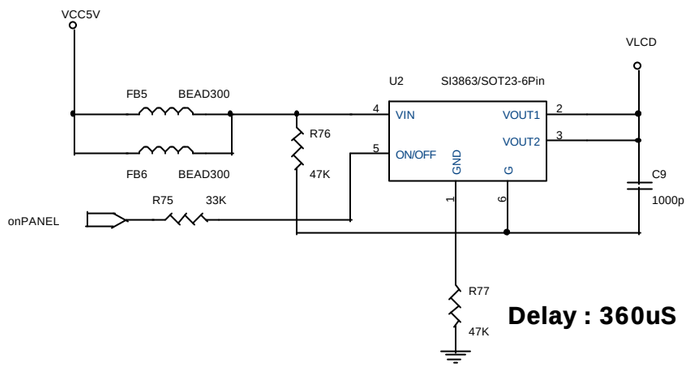

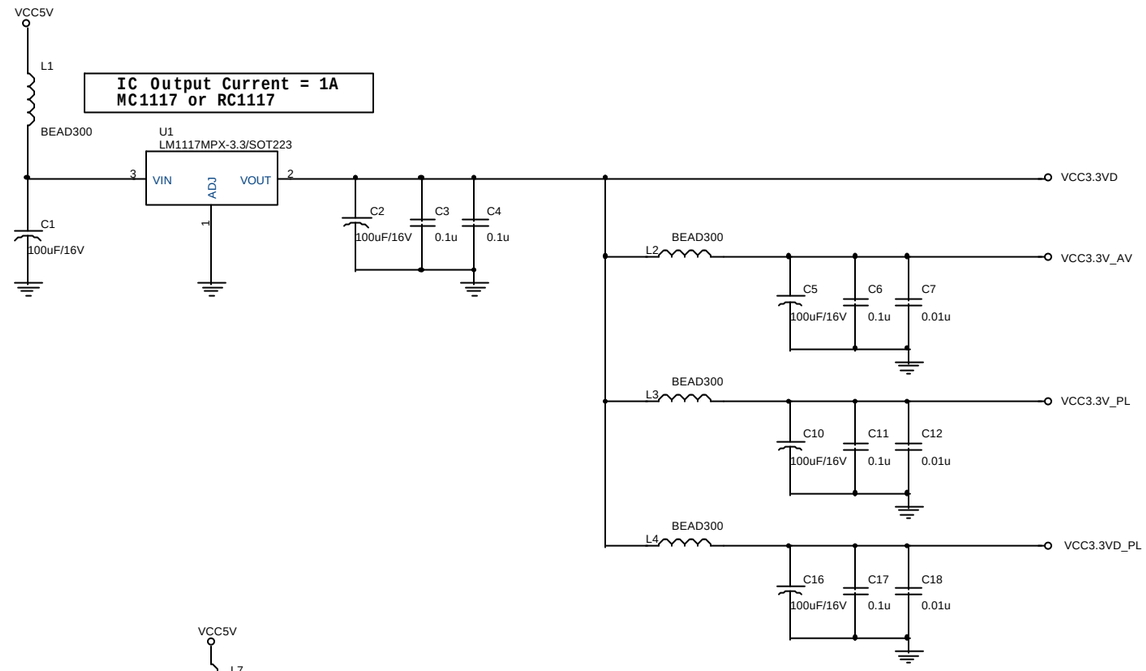

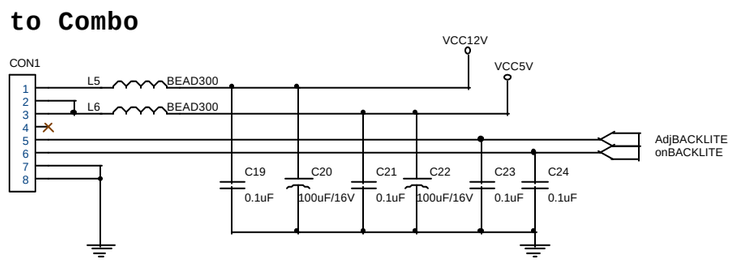

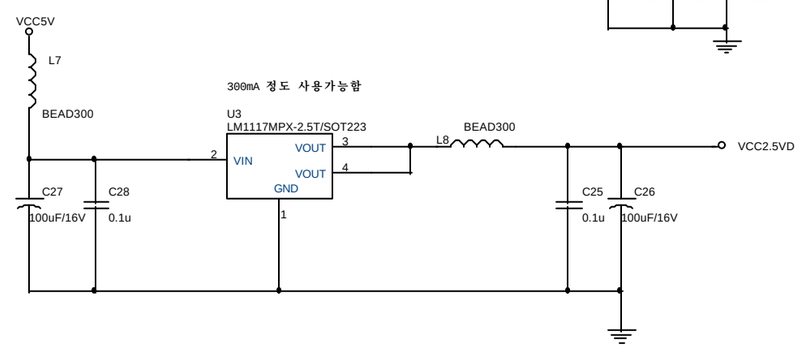

Title	**H750**	
Size Custom	Document Number	Rev A
Date: Thursday, March 20, 2003	Sheet 1 of 6	

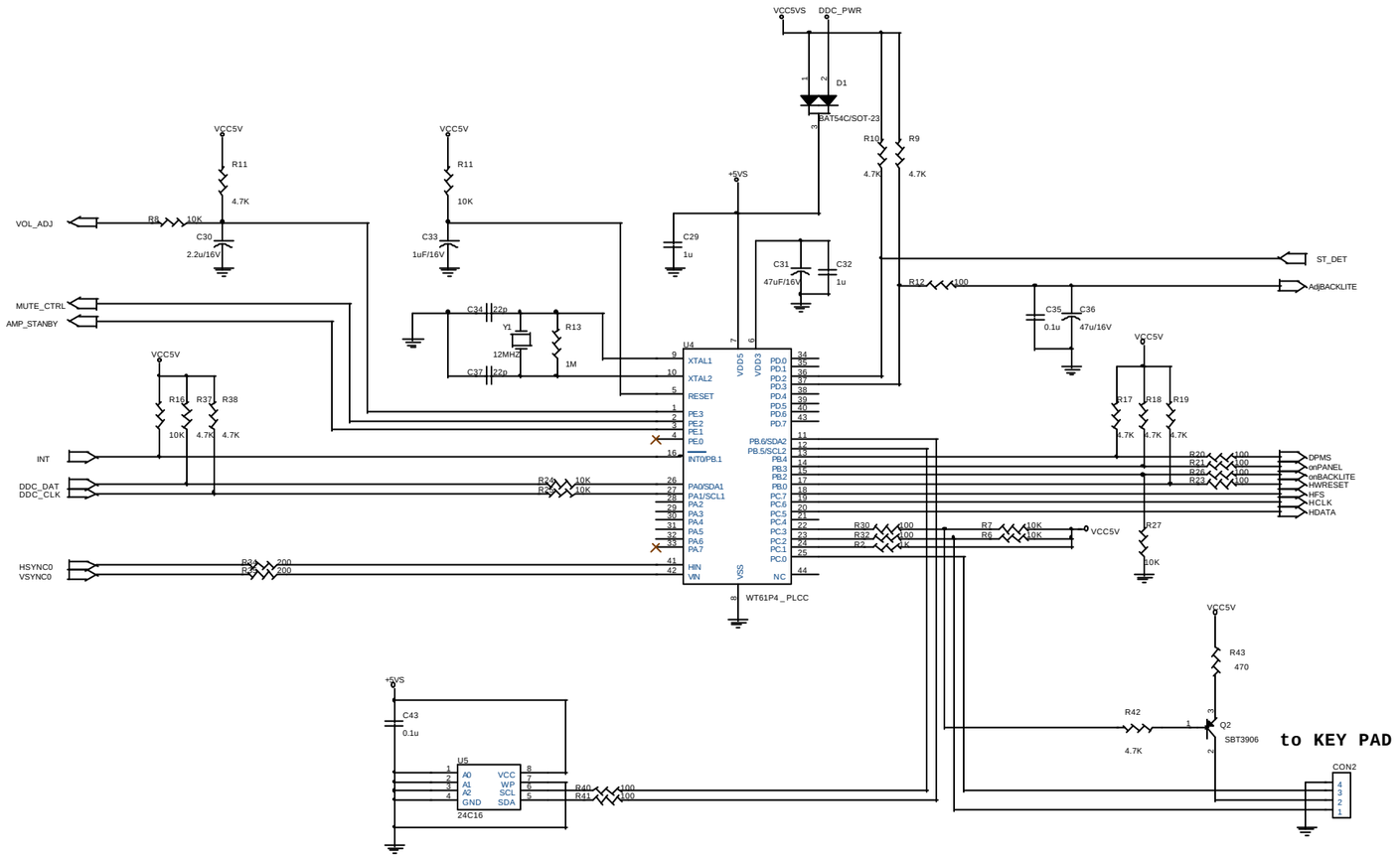

Title H750		
Size A	Document Number <Doc>	Rev <RevCode>
Date: Thursday, March 20, 2003	Sheet 2 of 6	

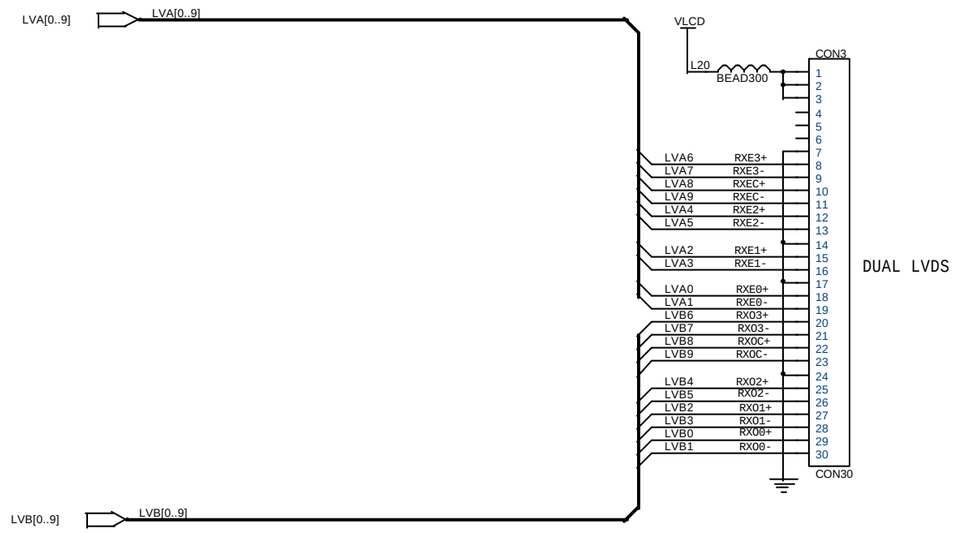

Title	H750		
Size Custom	Document Number		Rev A
Date: Thursday, March 20, 2003		Sheet 3 of 6	

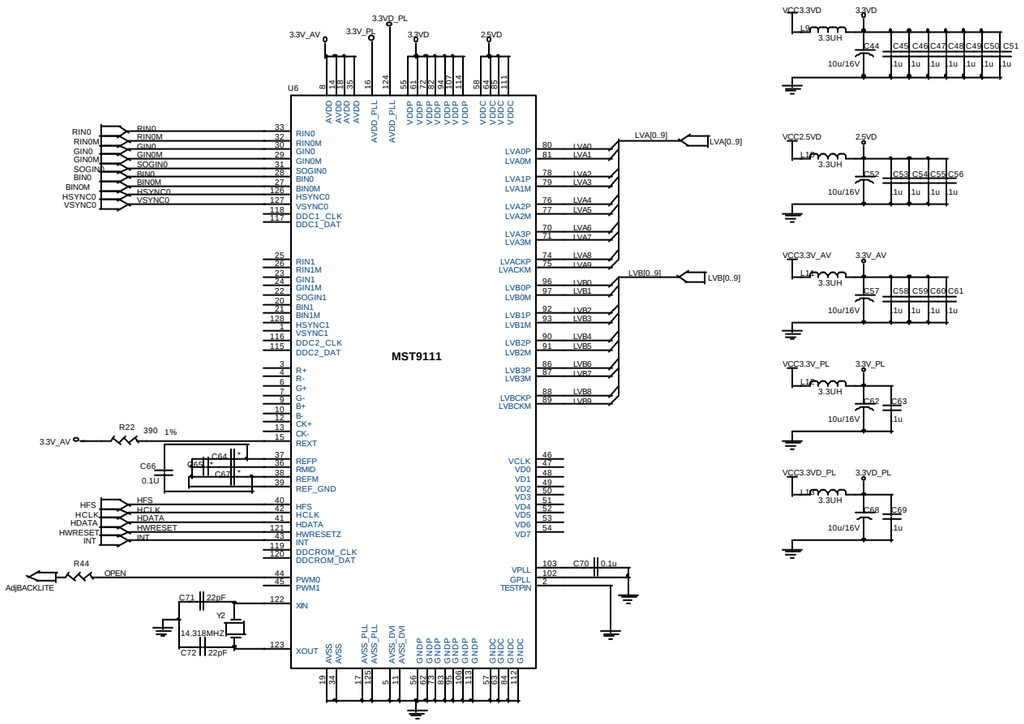

Title	**H750**	
Size A	Document Number	Rev A
Date: Thursday, March 20, 2003	Sheet 4 of 6	

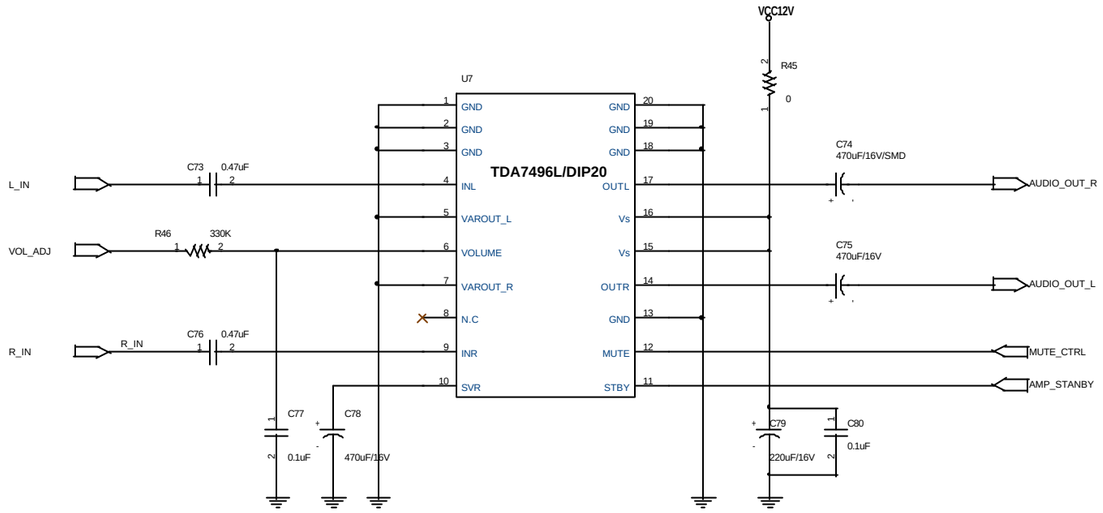

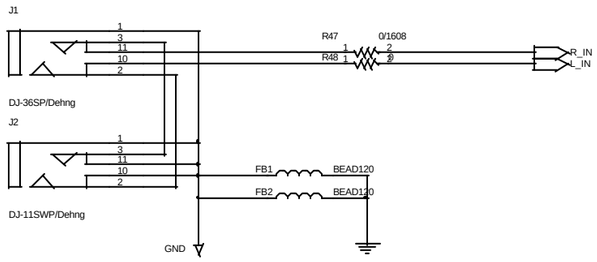

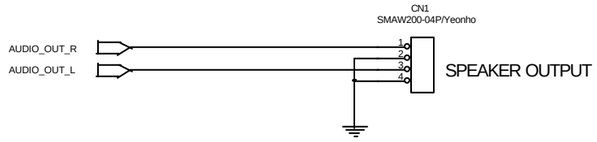

Title	H750	
Size C	Document Number AUDIO AMP	Rev X4
Date: Thursday, March 20, 2003	Sheet 5 of 6	

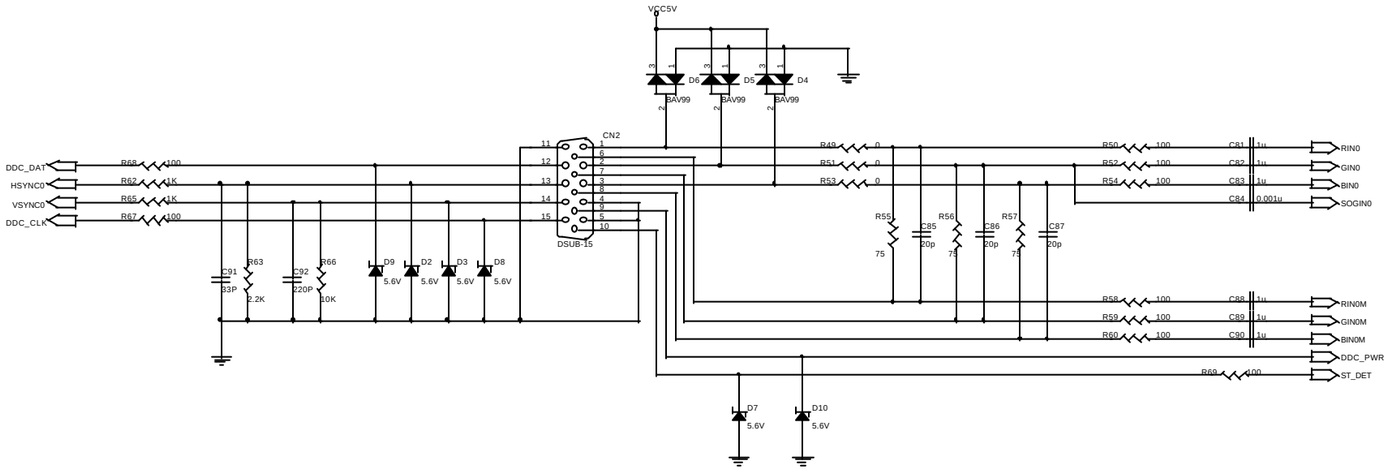

Title	**H750**	
Size A	Document Number	Rev A
Date: Thursday, March 20, 2003	Sheet 6 of 6	

REV1.1

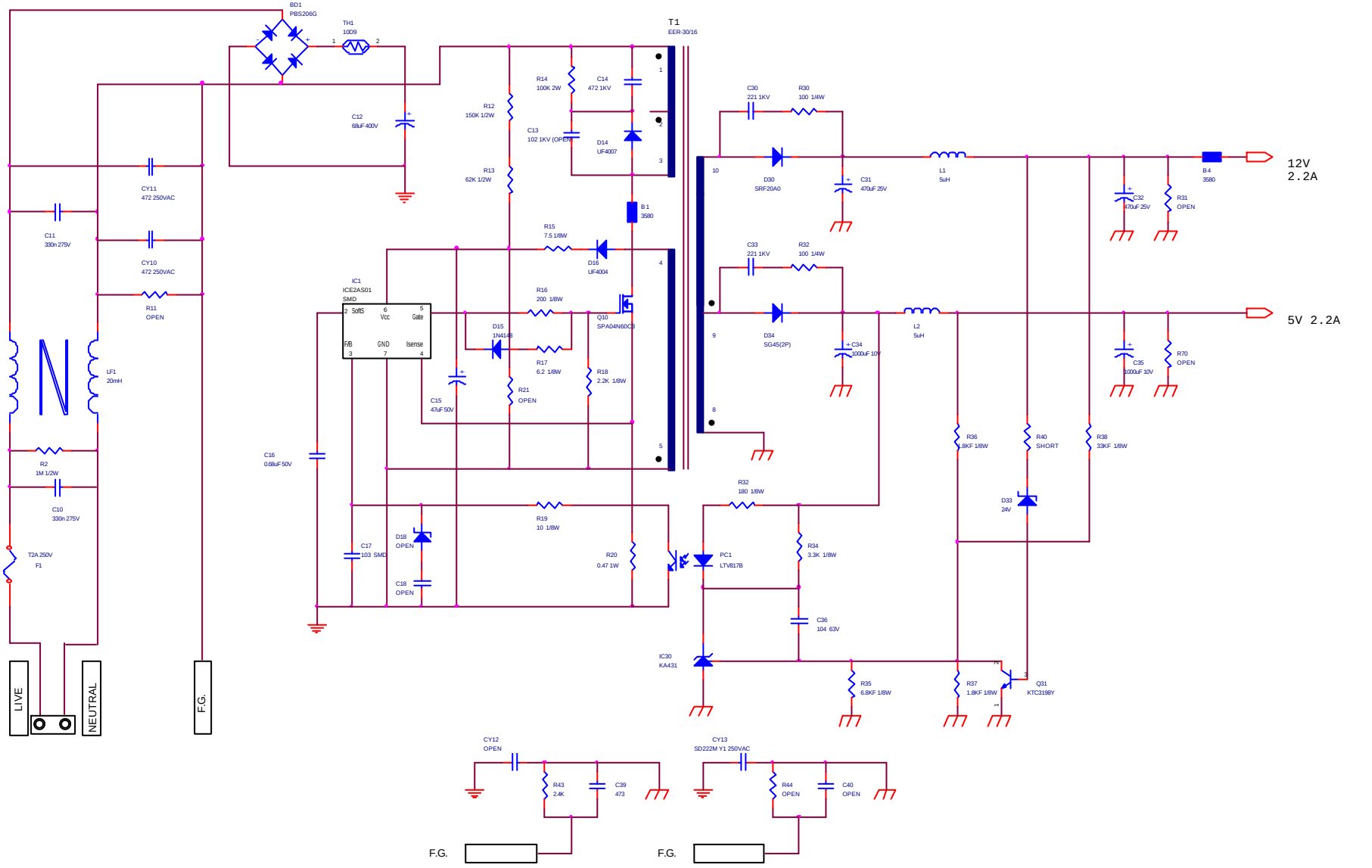

Title <Title>	IPHS4L17	
Size A3	Document Number <Doc>	Rev 1.6
Date: Friday, February 07, 2003	Sheet 1 of 1	

* NOTE

* ON/OFF : ON(5VDC)
  OFF(0V)
* Vin : 11.4-12.6Vdc
* BICONT : 0-4.5VMax

REV1.1

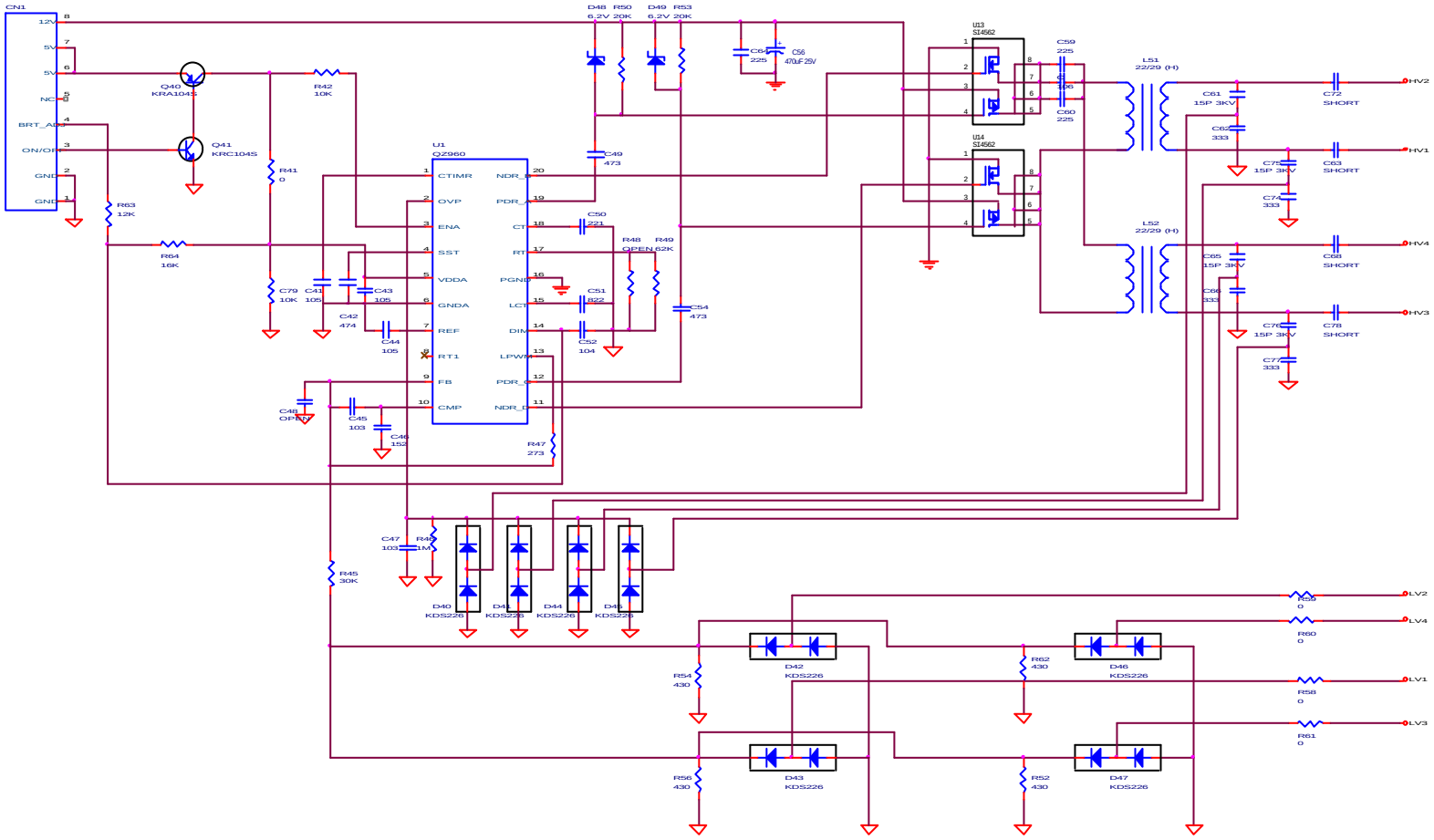

Title	IP64L17	
Size Custom	Document Number	Rev 1.1
Date:	Sheet 1 of 1	

20030528

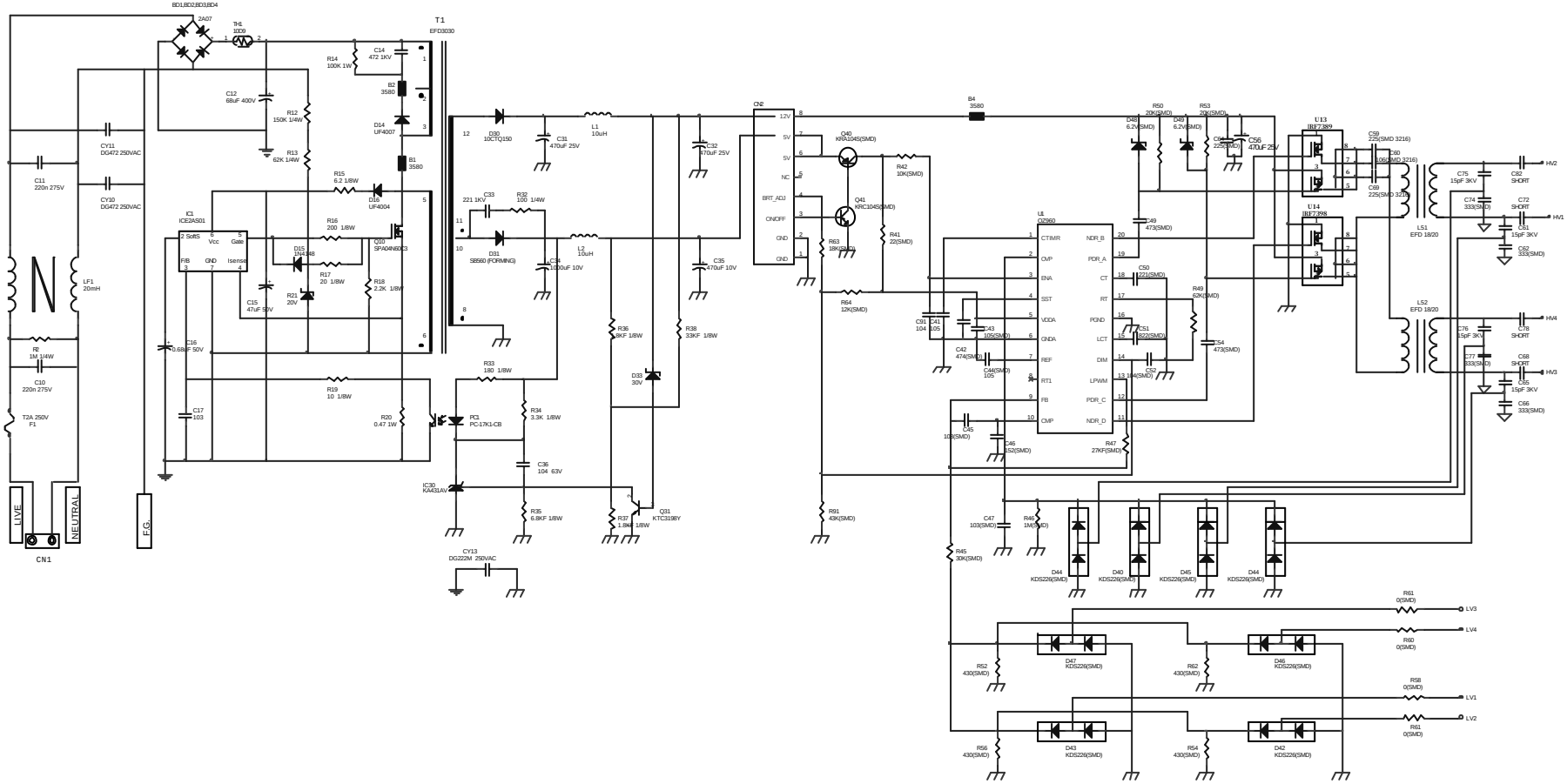

Title	IPHS19-S	
Size A2	Document Number <Doc>	Rev
Date: Wednesday, May 28, 2003	Sheet 1 of 1	

20030502

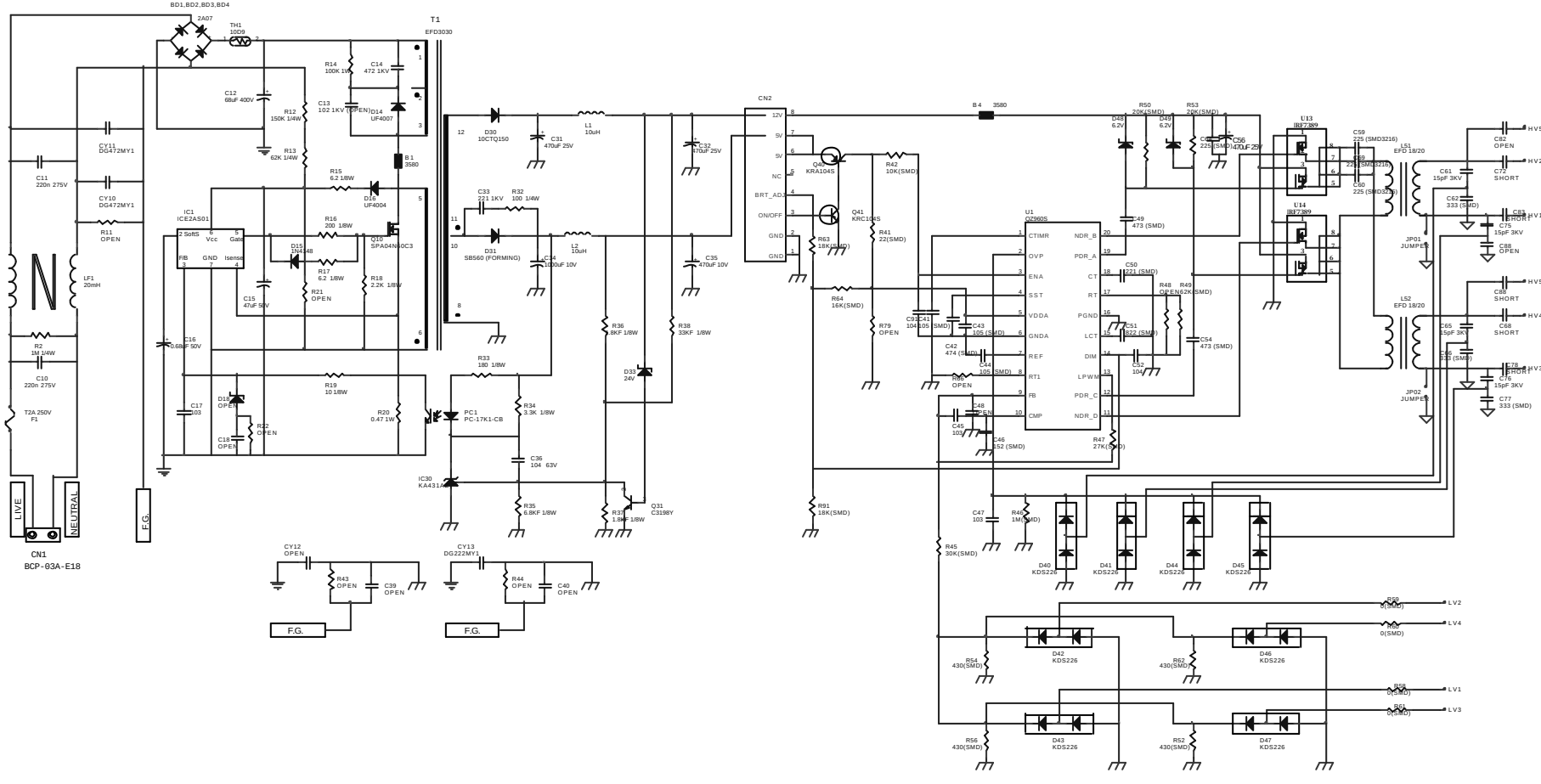

Title	<Title>		
Size A2	Document Number <Doc>		Rev
Date: Wednesday, May 28, 2003	Sheet 1 of 1		

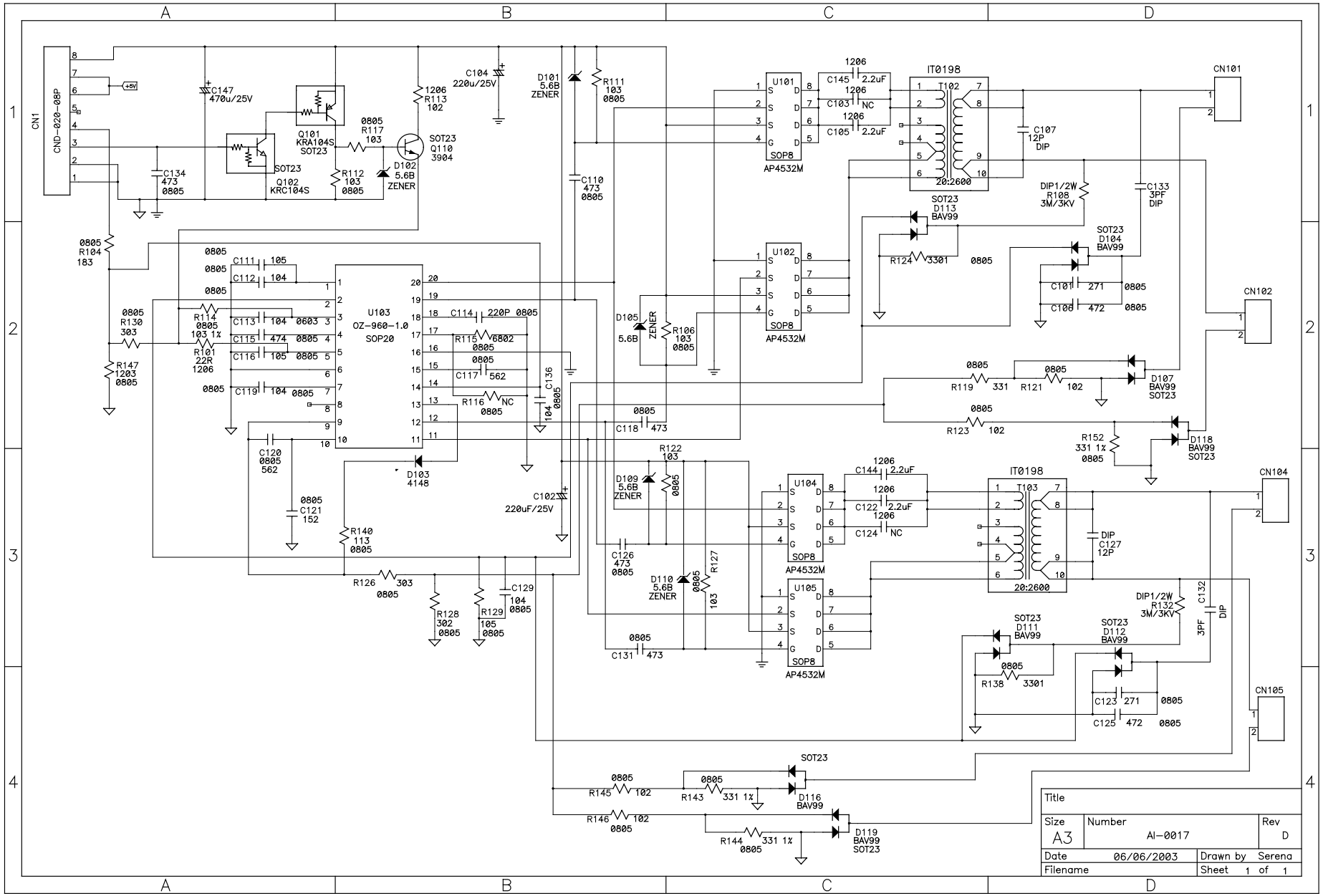
CN1
CND-020-08P
C147 470u/25V
Q101 KRA104S SOT23
Q102 KRC104S SOT23
R117 103 0805
SOT23 Q110 3904
D102 5.6B ZENER
R112 103 0805
R113 102 1206
C134 473 0805
C104 220u/25V
D101 5.6B ZENER
R111 103 0805
C110 473 0805
U101 SOP8 AP4532M
U102 SOP8 AP4532M
U104 SOP8 AP4532M
U105 SOP8 AP4532M
C145 2.2uF 1206
C103 NC 1206
C105 2.2uF 1206
IT0198 T102 20:2600
IT0198 T103 20:2600
C107 12P DIP
DIP1/2W R108 3M/3KV
C133 3PF DIP
SOT23 D113 BAV99
SOT23 D104 BAV99
R124 3301 0805
C101 271 0805
C106 472 0805
CN101
CN102
CN104
CN105
R104 183 0805
R130 303 0805
R147 1203 0805
R114 103 1% 0805
R101 22R 1206
C111 105 0805
C112 104 0805
C113 104 0603
C115 474 0805
C116 105 0805
C119 104 0805
U103 OZ-960-1.0 SOP20
C114 220P 0805
R115 6802 0805
C117 562 0805
R116 NC 0805
C136 104 0805
C120 562 0805
C121 152 0805
D103 4148
C102 220uF/25V
R140 113 0805
R126 303 0805
R128 302 0805
R129 105 0805
C129 104 0805
D105 5.6B ZENER
R106 103 0805
C118 473 0805
R122 103 0805
D109 5.6B ZENER
C126 473 0805
D110 5.6B ZENER
R127 103 0805
C131 473 0805
R119 331 0805
R121 102 0805
D107 BAV99 SOT23
R123 102 0805
R152 331 1% 0805
D118 BAV99 SOT23
C144 2.2uF 1206
C122 2.2uF 1206
C124 NC 1206
C127 12P DIP
DIP1/2W R132 3M/3KV
C132 3PF DIP
SOT23 D111 BAV99
SOT23 D112 BAV99
R138 3301 0805
C123 271 0805
C125 472 0805
SOT23
R145 102 0805
R143 331 1% 0805
D116 BAV99
R146 102 0805
R144 331 1% 0805
D119 BAV99 SOT23
Title
Size A3
Number AI-0017
Rev D
Date 06/06/2003
Drawn by Serena
Filename
Sheet 1 of 1
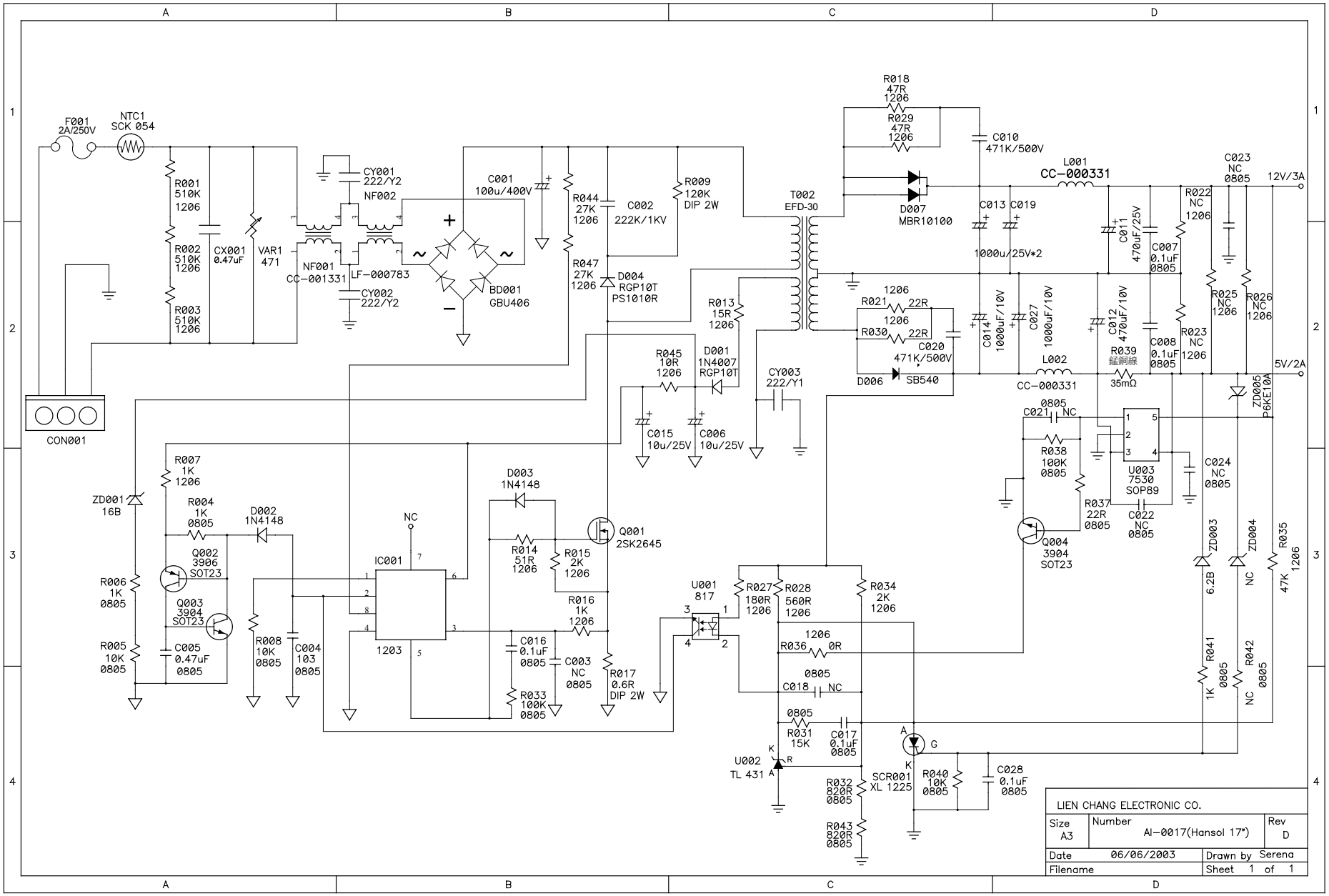
聯昌電子企業股份有限公司
LC Electronic Co., Ltd.