D_SUB

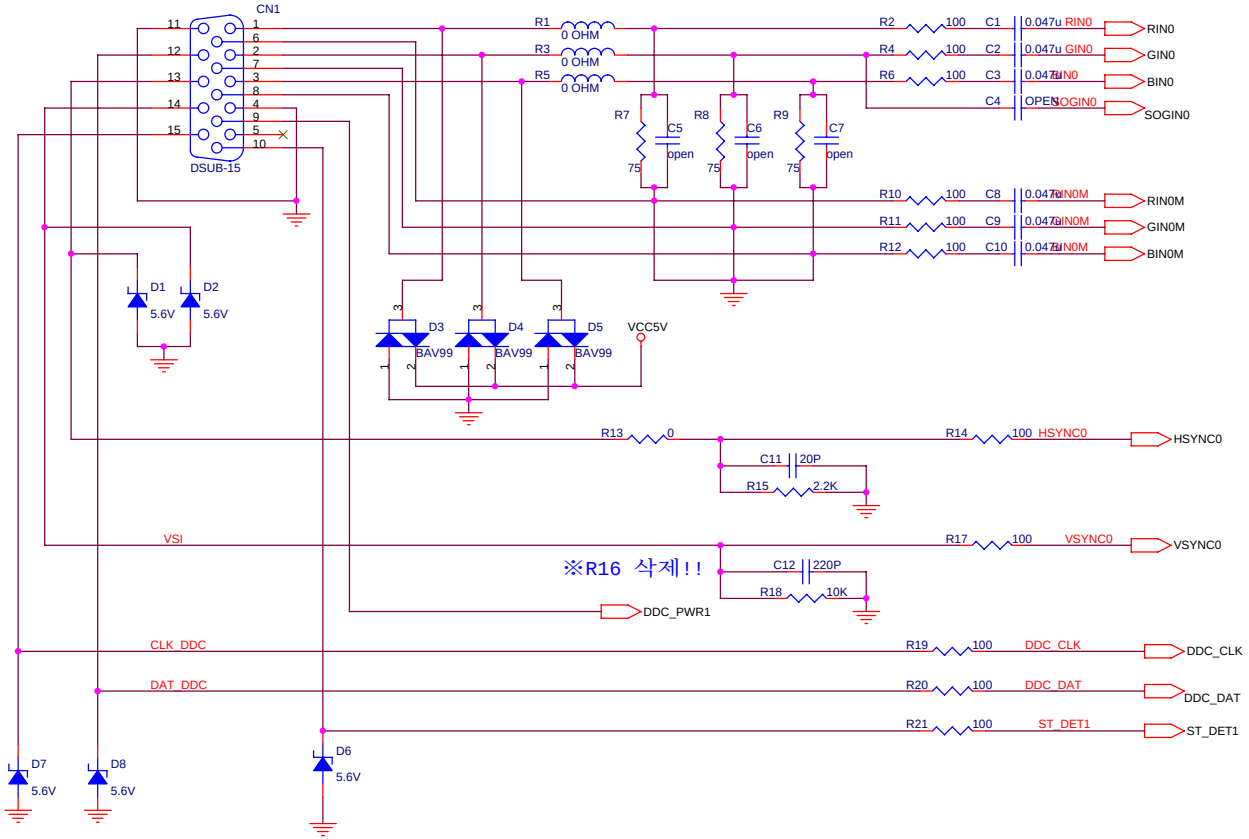

Title	D_SUB	
Size A3	Document Number <Doc>	Rev <RevCode>
Date: Saturday, July 05, 2003	Sheet 1 of 6	

DVI

1. ST_DET2의 DVI PIN 변경

1. 24LC21의 VCLK 수정

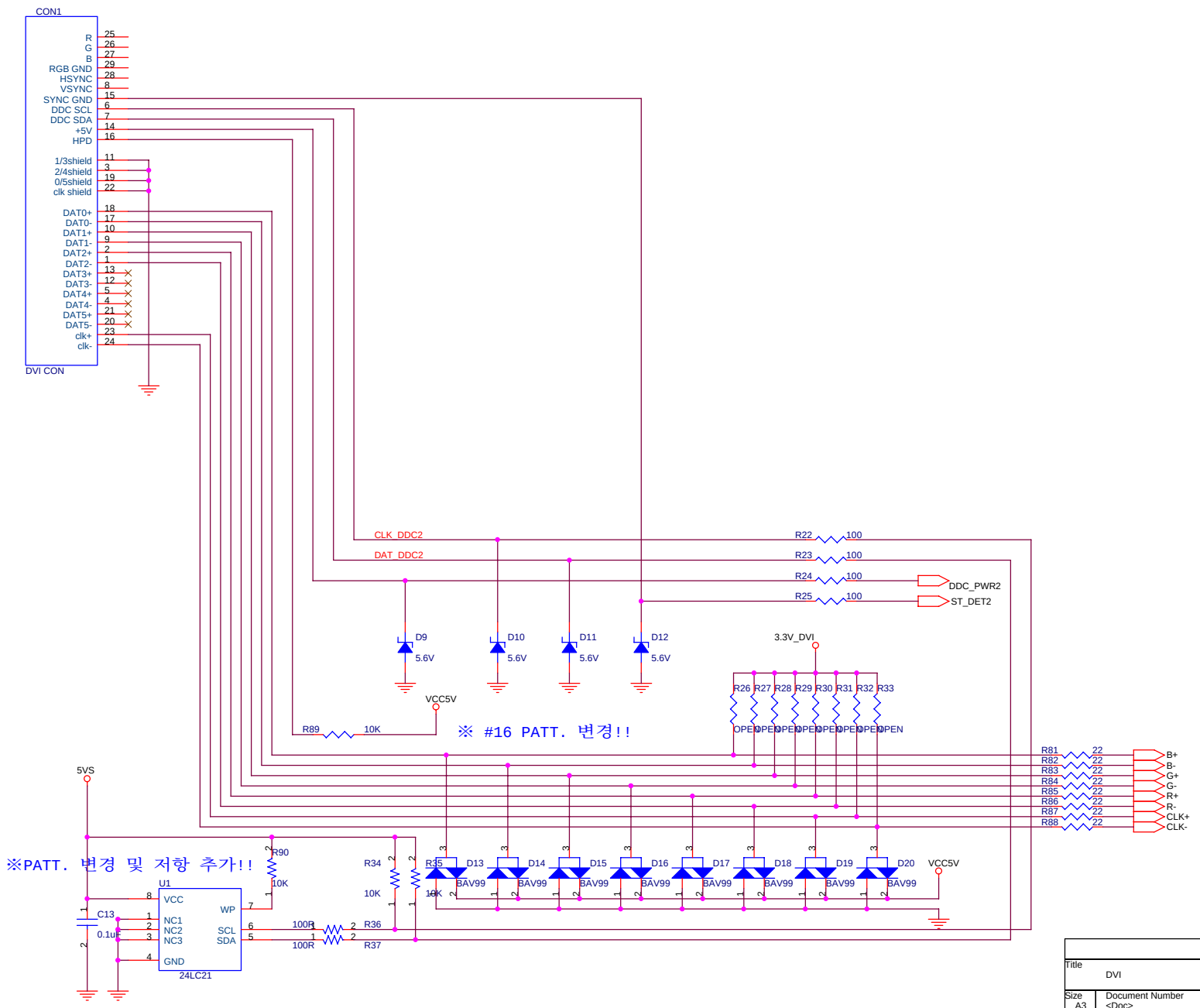

Title	DVI	
Size A3	Document Number <Doc>	Rev <RevCode>
Date: Saturday, July 05, 2003	Sheet 2 of 6	

1. R43위치 이동!!

1.KEY PAD 부분 PULL UP 저항 2EA 추가

MCU

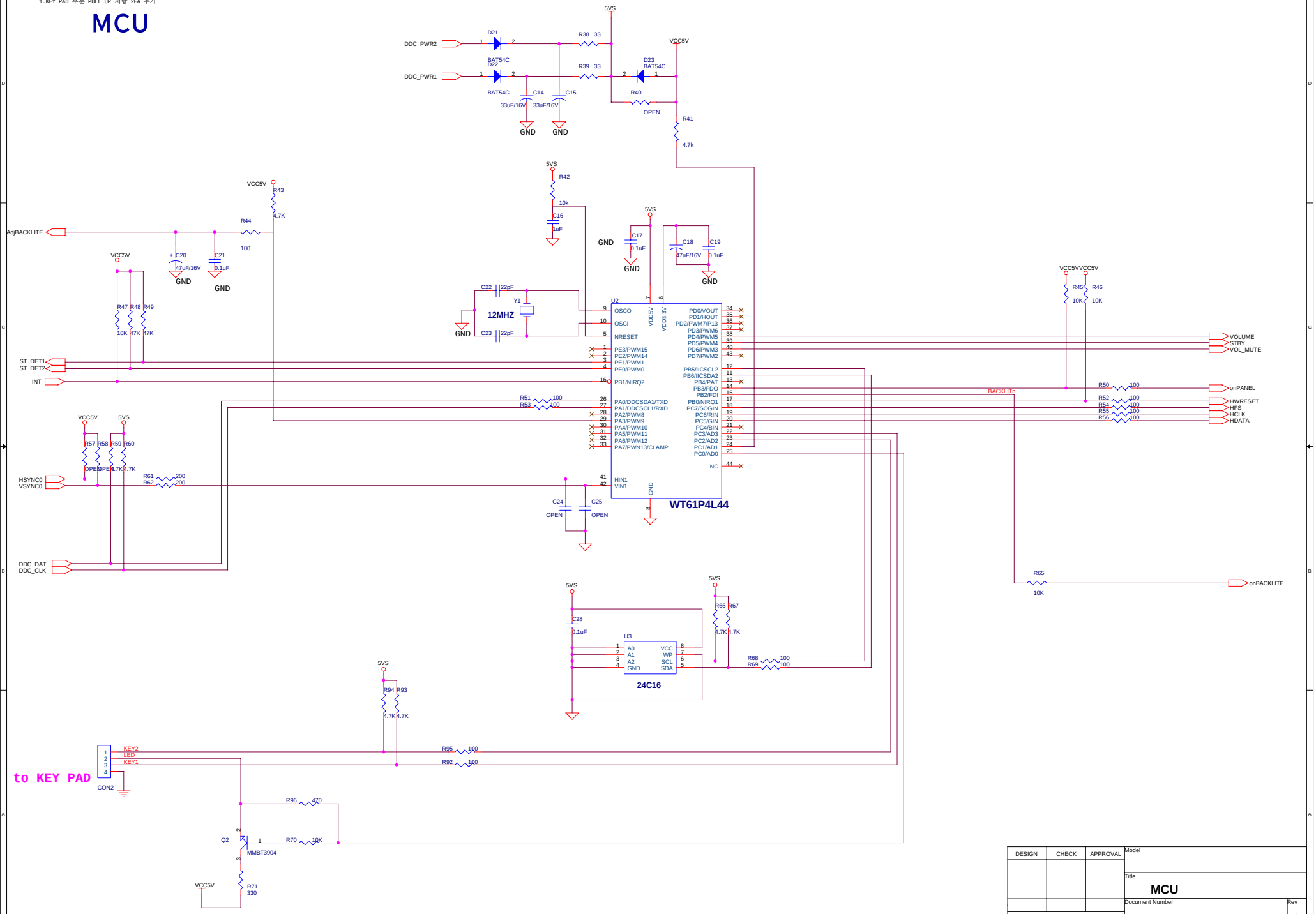

DESIGN	CHECK	APPROVAL	Model
			Title: MCU
			Document Number / Rev 1
WooYoung Telecom Co., Ltd.			Sheet 3 of 6

SCALER

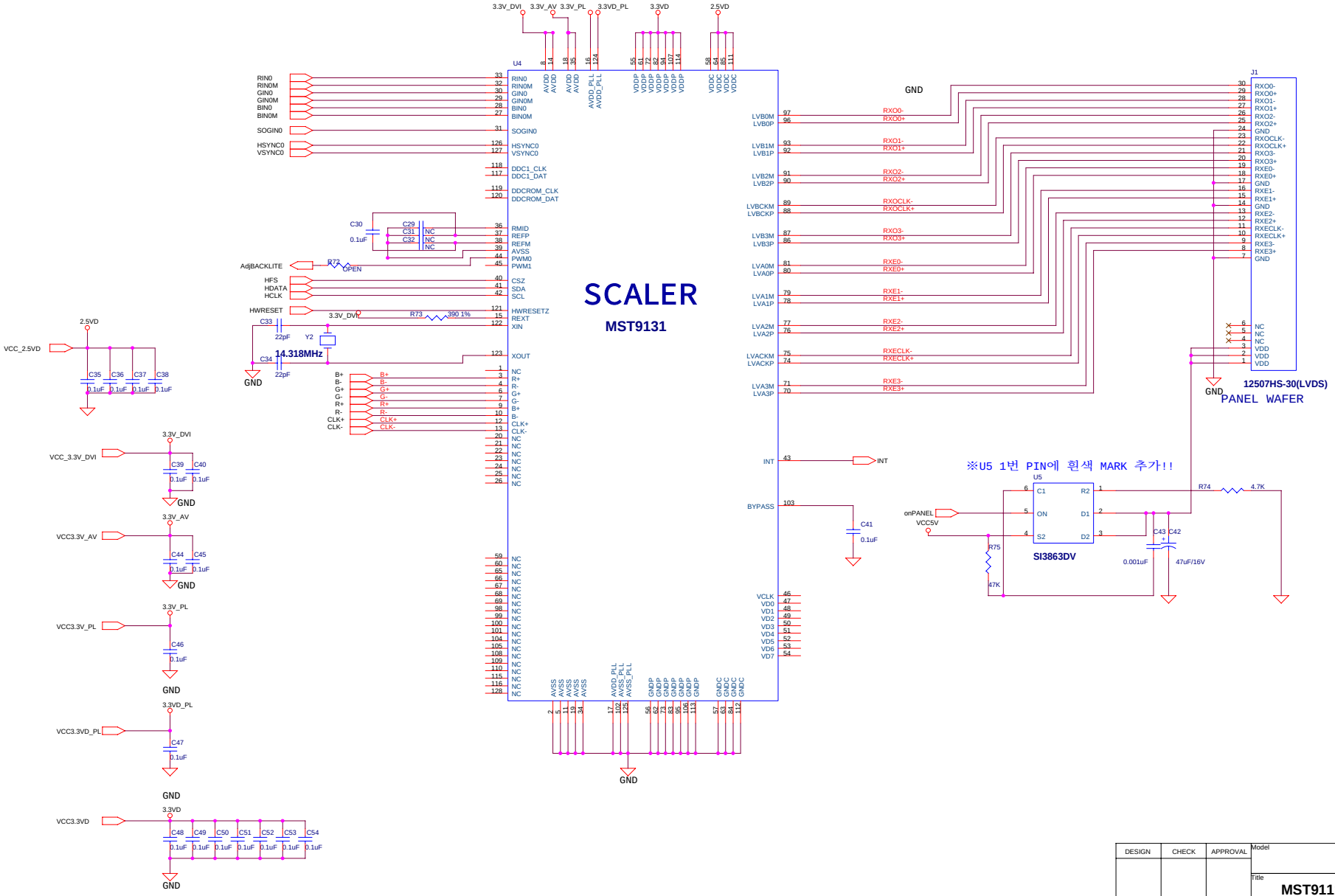

DESIGN	CHECK	APPROVAL	Model
			Title: MST9111 & PANEL
			Document Number: 97E0D0220Y — Rev: 1
WooYoung Telecom Co., Ltd.			Sheet 4 of 6

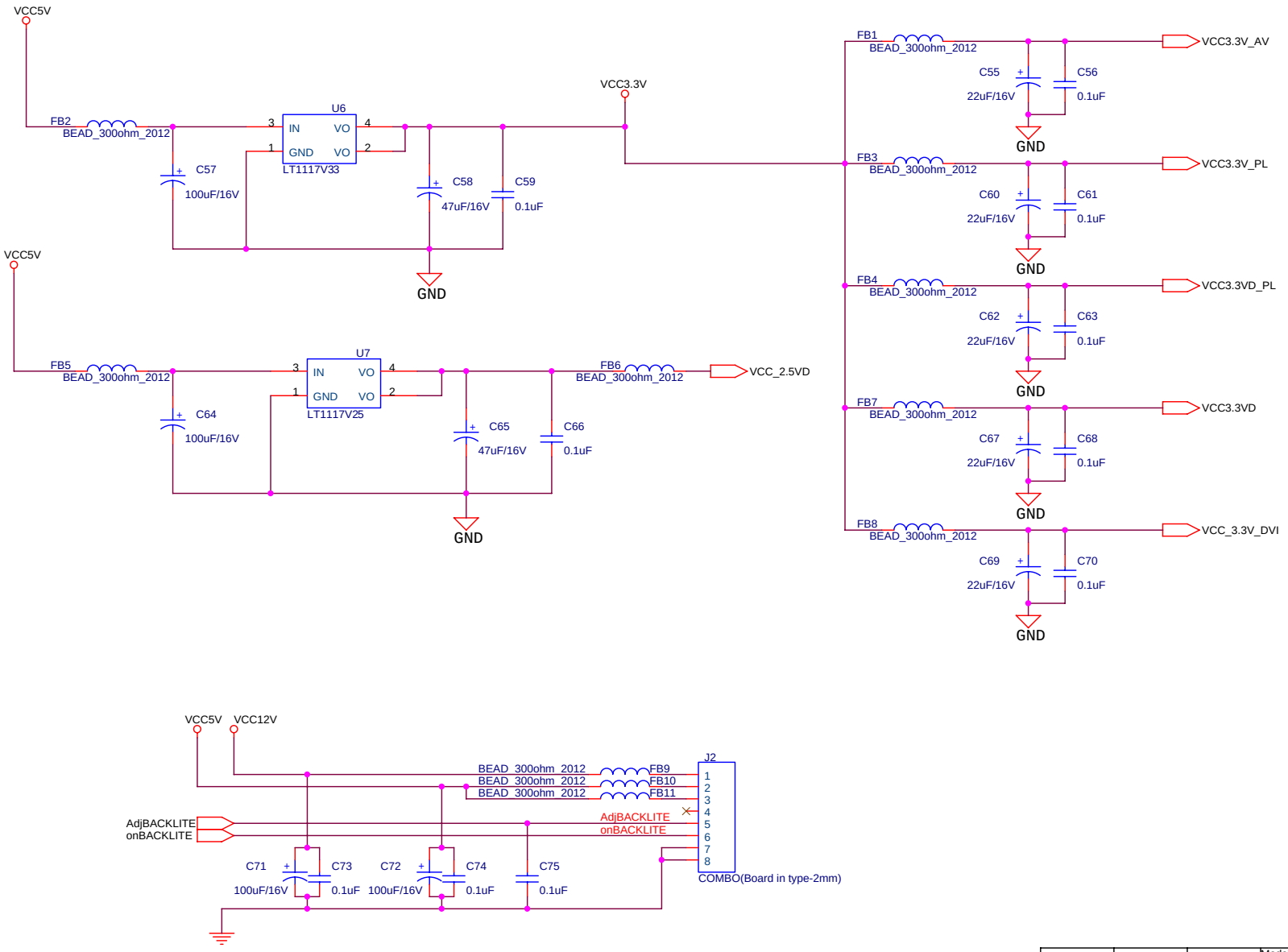

DESIGN	CHECK	APPROVAL	Model
			Title: **INVERTER & POWER**
			Document Number / Rev 1
WooYoung Telecom Co., Ltd.			Sheet 5 of 6

AUDIO

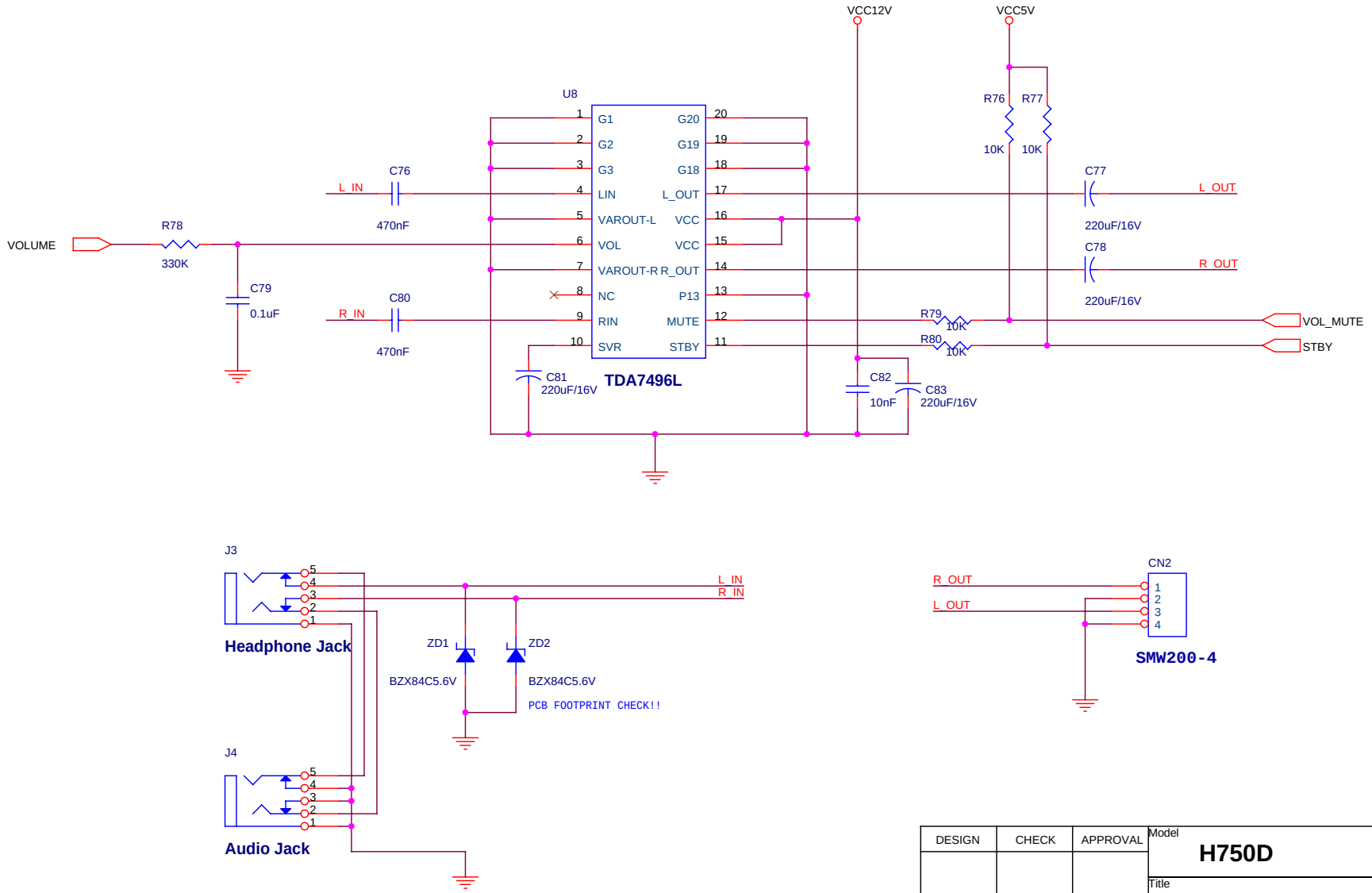

DESIGN	CHECK	APPROVAL	Model H750D
			Title AUDIO
			Document Number / Rev 1
WooYoung Telecom Co., Ltd.			Sheet 6 of 6

20030528

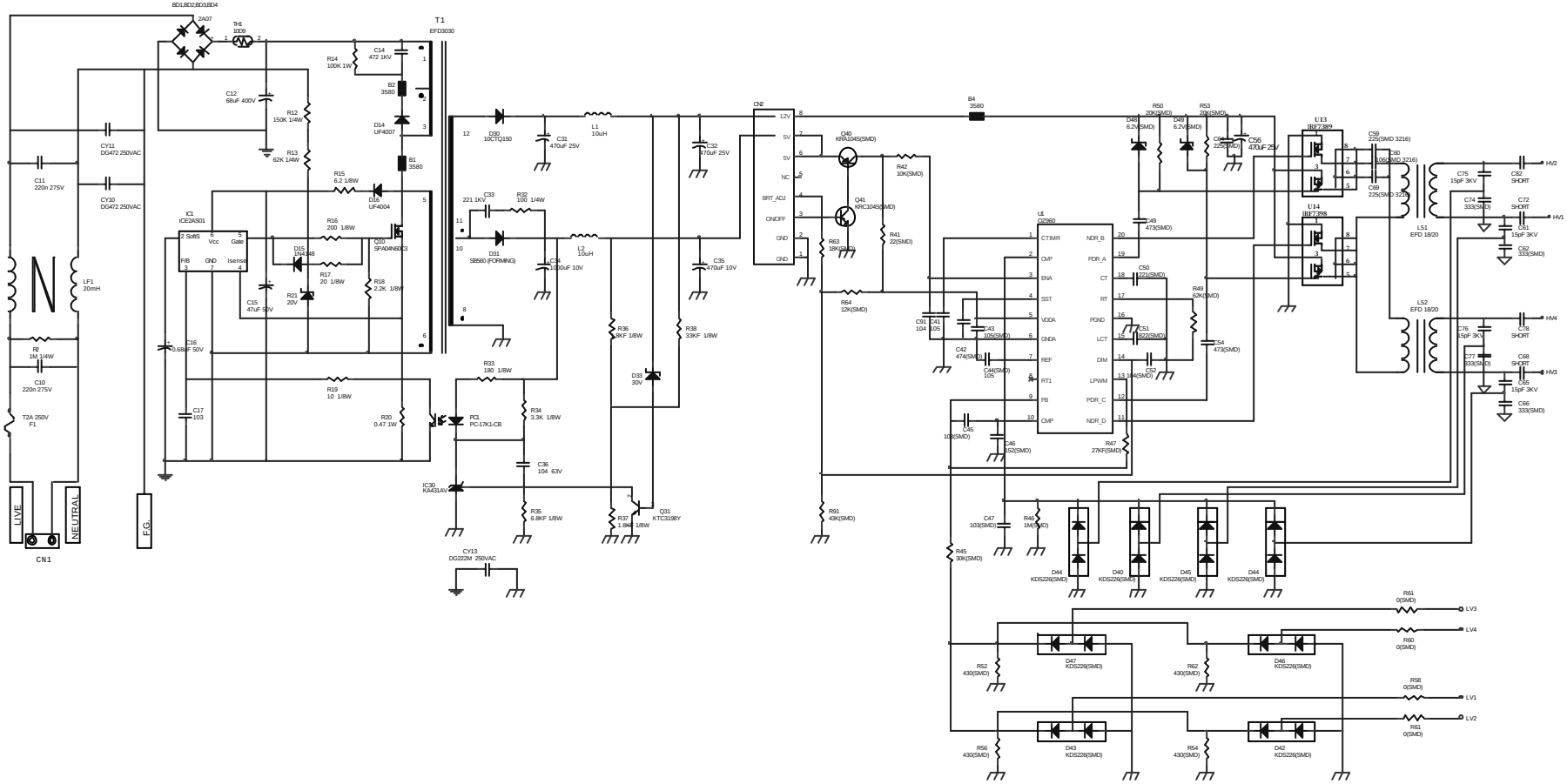

Title	IPHS19-S	
Size A2	Document Number <Doc>	Rev
Date: Wednesday, May 28, 2003	Sheet 1 of 1	