SAR, APD and IPD Evaluation Report for FCC

Applicant Name	:	**ASUSTeK COMPUTER INC.**
Applicant Address	:	**1F., No. 15, Lide Rd., Beitou Dist., Taipei City 112, Taiwan**
Product Name	:	**2TX 11ax (WiFi6E) BW160+BT/BLE Combo Card**
Brand Name	:	**MediaTek**
Model Number	:	**MT7922A22M**
FCC ID	:	**MSQ-MT7922A22M**
Report Number	:	**USSC261128001**
Compliant Standards	:	**FCC 47 CFR §2.1093**
Sample Received Date	:	**Jan. 12, 2026**
Date of Testing	:	**Jan. 14, 2026 ~ Jan. 22, 2026**
Report Issued Date	:	**Feb. 26, 2026**

*The above equipment has been tested by **Eurofins E&E Wireless Taiwan Co., Ltd.**, and found compliance with the requirement of the above standards. The test record, data evaluation & Device Under Test (DUT) configurations represented herein are true and accurate accounts of the measurements of the sample's characteristics under the conditions specified in this report.*

Note:

1. *The test results are valid only for samples provided by customers and under the test conditions described in this report.*
2. *This report shall not be reproduced except in full, without the written approval of Eurofins E&E Wireless Taiwan Co., Ltd.*
3. *The relevant information is provided by customers in this test report. According to the correctness, appropriateness or completeness of the information provided by the customer, if there is any doubt or error in the information which affects the validity of the test results, the laboratory does not take the responsibility.*

Approved By：

Roy Wu / SAR Technical Director

Testing Laboratory
1330

Table of Contents

Revision History **3**
1. Compliance Statement **4**
2. Test Regulations **5**
2.1. Reference Standard and Guidance 5
2.2. RF Exposure Limits 6
3. Information of Testing Laboratory **7**
4. DUT (Device Under Test) Information **8**
4.1. Device Overview 8
5. Measurement System Description **10**
5.1. SAR Definition 10
5.2. SAR Measurement Setup 11
5.3. SAR Test Procedures 15
5.4. Incident Power Density Definition 18
5.5. Incident Power Density Measurement Setup 19
5.6. Incident Power Density Measurement Procedure 22
6. System Verification **25**
6.1. SAR Tissue Simulating Liquid Verification 25
6.2. SAR Test System Verification 26
6.3. IPD Test System Verification 27
7. Test Configurations **28**
7.1. Description of Test Position 28
7.2. FCC General Test Procedures 29
8. RF Output Power Specification and Measurement **33**
8.1. Nominal and Maximum Output Power Specifications 33
8.2. Measured Conducted Power Results for WLAN 39
9. Evaluation for Standalone Transmission Scenario **41**
9.1. Test Notes 41
9.2. Measured and Reported SAR and APD Results for Body 44
9.3. Measured and Reported IPD Results 44
9.4. SAR Measurement Variability 45
10. Test Equipment **46**
11. Measurement Uncertainty **47**

Appendix A - DUT Antenna Illustration and Test Setup Photographs
Appendix B - System Check Plots
Appendix C - Highest Test Plots
Appendix D - Calibration Certificate for Probe
Appendix E - Calibration Certificate for Dipole

Revision History

Rev.	Issued Date	Description	Revised by
00	Feb. 26, 2026	Initial Issue	Rowan Hsieh

1. Compliance Statement

This device (FCC ID: ***MSQ-MT7922A22M***) has been tested by ***Eurofins E&E Wireless Taiwan Co., Ltd.*** in accordance with the measurement procedures specified in FCC KDB procedures, and the results shown in below are capable of demonstrating compliance for localized specific absorption rate (SAR) for general population / uncontrolled environment exposure limits specified in *FCC 47 CFR §1.1310*.

Highest Reported SAR		
Equipment Class	Mode	Exposure Condition Body (Separation: 5 mm) SAR_{1g} (W/kg)
DTS	WLAN 2.4 GHz	0.20
NII	WLAN 5 GHz	0.81
6CD	WLAN 6 GHz	0.87
SAR Limits		1.60

Highest Reported Total PD		
Equipment Class	Mode	Exposure Condition Body Averaging Area [4 cm²] Total PD (W/m²)
6CD	WLAN 6 GHz	5.34
Total PD Limits		10.00

Note.

Due to both two transmit antennas to user distance is larger than module SAR test separation distance 5mm. According to KDB 447498D01v06 and KDB 616217 D04v01r02, the validation methodology described in this report includes selecting the maximum output power configuration for each antenna and conducting SAR testing at the points where the antenna is positioned at the minimum distance from the human body.

2. Test Regulations

2.1. Reference Standard and Guidance

The Specific Absorption Rate (SAR) testing documented in this report were performed in accordance with following FCC published KDB guidance and standard：

KDB Publication 248227 D01 – IEEE 802.11 Wi-Fi SAR v02r02
KDB Publication 447498 D01 – General RF Exposure Guidance v06
KDB Publication 447498 D03 – Supplement C Cross-Reference v01
KDB Publication 447498 D04 – Interim General RF Exposure Guidance v01
KDB Publication 616217 D04 – SAR for Laptop and Tablets v01r02
KDB Publication 648474 D04 – Handset SAR v01r03
KDB Publication 865664 D01 – SAR measurement 100 MHz to 6 GHz v01r04
KDB Publication 865664 D02 – RF Exposure Reporting v01r02
IEEE Std 1528-2013

In addition to the above, the following guideline was used：

TCB Workshop Oct 2016 – Guidelines for Bluetooth Duty Factor
TCB Workshop Oct 2016 – Guidelines for DUT Holder Perturbations
TCB Workshop Oct 2018 – Guidelines for Near-Field Power Density
TCB Workshop Apr 2019 – Guidelines for Tissue Simulating Liquids (TSL)
TCB Workshop Apr 2019 – Guidelines for IEEE 802.11ax SAR Testing
TCB Workshop Oct 2020 – Guidelines for U-NII 6-7 GHz SAR Testing
TCB Workshop Oct 2022 – Guidelines for SAR test frequencies in multi-rule
TCB Workshop Oct 2022 – Guidelines for f-above-6 GHz Portable Devices

2.2. RF Exposure Limits

Population / Uncontrolled Environments: Defined as locations where there is the exposure of individuals who have no knowledge or control of their exposure. The general population / uncontrolled exposure limits are applicable to situations in which the general public may be exposed or in which persons who are exposed as a consequence of their employment may not be made fully aware of the potential for exposure or cannot exercise control over their exposure. Members of the general public would come under this category when exposure is not employment-related; for example, in the case of a wireless transmitter that exposes persons in its vicinity.

Occupational / Controlled Environments: Defined as locations where there is exposure that may be incurred by persons who are aware of the potential for exposure, (i.e., as a result of employment or occupation). In general, occupational / controlled exposure limits are applicable to situations in which persons are exposed as a consequence of their employment, who have been made fully aware of the potential for exposure and can exercise control over their exposure. This exposure category is also applicable when the exposure is of a transient nature due to incidental passage through a location where the exposure levels may be higher than the general population/uncontrolled limits, but the exposed person is fully aware of the potential for exposure and can exercise control over his or her exposure by leaving the area or by some other appropriate means.

The Radiofrequency Radiation Exposure Limits Specified in FCC 47 CFR §1.1310

Exposure Scenario	Frequency Range	Local Head/Body SAR (1g-SAR, W/kg)	Local Extremity SAR (10g-SAR, W/kg)	Local Power Density (4 cm^2, mW/cm^2)
Population / Uncontrolled	100 kHz to 6 GHz	1.6	4.0	
	1.5 GHz to 100 GHz			1.0
Occupational / Controlled	100 kHz to 6 GHz	8.0	20.0	
	1.5 GHz to 100 GHz			5.0

3. Information of Testing Laboratory

Test Facilities

Company Name: Eurofins E&E Wireless Taiwan Co., Ltd.
Address No.: 140-1, Changan Street, Bade District, Taoyuan City, Taiwan
Website: https://www.eurofins.tw/
Telephone: +886-3-271-0188
Fax: +886-3-271-0190
E-mail: infoEETW@eurofins.com

Test Site Location

☐ No. 140-1, Changan Street, Bade District, Taoyuan City, Taiwan
☑ No. 2, Wuquan 5th Rd. Wugu Dist., New Taipei City, Taiwan

Laboratory Accreditation

Location	TAF	FCC	ISED
No. 140-1, Changan Street, Bade District, Taoyuan City, Taiwan	Accreditation No.: 1330	Designation No.: TW0010	Company No.: 7381A CAB ID: TW1330
No. 2, Wuquan 5th Rd. Wugu Dist., New Taipei City, Taiwan	Accreditation No.: 1330	Designation No.: TW0034	Company No.: 28922 CAB ID: TW1330

4. DUT (Device Under Test) Information

4.1. Device Overview

Product Name	2TX 11ax (WiFi6E) BW160+BT/BLE Combo Card	
Brand Name	MediaTek	
Model Name	MT7922A22M	
FCC ID	MSQ-MT7922A22M	
Host Information	Product Name: Notebook PC Trade Name: ASUS Model Name: FA808, TUF808, TUF868, FA808FP, FA808FM, FA808PP, FA808PM, TUF808FP, TUF808FM, TUF808PP, TUF808PM, TUF868FP, TUF868FM, TUF868PP, TUF868PM All models are electrically identical (including appearance, dimensions, I/O ports, antenna locations, and RF electrically identical are the same.), different model names are for marketing purpose.	
Testing Sample No.	Sample 1: C261128_A002 Sample 2: C261128_A003	
EUT Configurations	Sample 1: INPAQ Antenna Sample 2: Luxshare-ICT Antenna	
Supported Wireless Technologies	**Tx Frequency (MHz)**	**Operating Mode**
	WLAN 2.4G : 2412 ~ 2472 5G : 5180 ~ 5240, 5260 ~ 5320, 5500 ~ 5720, 5745 ~ 5885 6G : 5955 ~ 6415, 6435 ~ 6515, 6535 ~ 6875, 6895 ~ 7115	2.4G : 802.11b/g/n/ac/ax 5G : 802.11a/n/ac/ax 6G : 802.11a/ax
	Bluetooth 2402 ~ 2480	BR, EDR, LE

Note:

The above DUT information is declared by manufacturer and for more detailed features description please refers to the manufacturer's specifications or User's Manual.

Antenna list:

Antenna Source	ANT	Manufacturer	Part No.(Vendor)	Type	Frequency (MHz)	Max. Gain (dBi)
1	Chain 0 (Ant 0)	INPAQ	WA-P-LELE-04-069 (14008-06070200)	PIFA Antenna	2400 - 2483.5	2.89
					5150 - 5250	2.64
					5250 - 5350	3.28
					5470 - 5725	0.99
					5725 - 5850	3.96
					5850 - 5895	3.96
					5925 - 6425	4.2
					6425 - 6525	2.6
					6525 - 6875	3.38
					6875 - 7125	3.25
	Chain 1 (Ant 1)	INPAQ	WA-P-LELE-04-069 (14008-06070200)	PIFA Antenna	2400 - 2483.5	2.79
					5150 - 5250	1.24
					5250 - 5350	2.5
					5470 - 5725	3.57
					5725 - 5850	3.5
					5850 - 5895	3.5
					5925 - 6425	3.91
					6425 - 6525	2.98
					6525 - 6875	4.39
					6875 - 7125	2.82
2	Chain 0 (Ant 0)	Luxshare-ICT	LA9RF613-NB-H (14008-06070300)	PIFA Antenna	2400 - 2483.5	2.42
					5150 - 5250	2.35
					5250 - 5350	3.14
					5470 - 5725	0.85
					5725 - 5850	3.64
					5850 - 5895	3.64
					5925 - 6425	4.05
					6425 - 6525	2.25
					6525 - 6875	2.86
					6875 - 7125	2.9
	Chain 1 (Ant 1)	Luxshare-ICT	LA9RF613-NB-H (14008-06070300)	PIFA Antenna	2400 - 2483.5	2.71
					5150 - 5250	1.01
					5250 - 5350	2.21
					5470 - 5725	2.57
					5725 - 5850	2.16
					5850 - 5895	2.16
					5925 - 6425	3.66
					6425 - 6525	2.37
					6525 - 6875	3.46
					6875 - 7125	2.33

Note:
1. Antenna Source 1 (INPAQ antenna) and Antenna Source 2 (Luxshare-ICT antenna) are the same type of antenna, only different in manufacturer.
2. The Chain 0 is connected to Main port / Chain 1 is connected to AUX port of module.

5. Measurement System Description

5.1. SAR Definition

The Specific Absorption Rate (SAR) is related to the rate at which energy is absorbed per unit mass in an object exposed to a radio field. The SAR distribution in a biological body is complicated and is usually carried out by experimental techniques or numerical modeling. The standard recommends limits for two tiers of groups, occupational / controlled and general population / uncontrolled, based on a person's awareness and ability to exercise control over his or her exposure. In general, occupational / controlled exposure limits are higher than the limits for general population / uncontrolled. The SAR is defined as the time derivative (rate) of the incremental energy (*dW*) absorbed by (dissipated in) an incremental mass (*dm*) contained in a volume element (*dV*) of a given density (ρ) as shown in the following equation:

$$\boldsymbol{SAR = \frac{d}{dt}\left(\frac{dW}{dm}\right) = \frac{d}{dt}\left(\frac{dW}{\rho dV}\right)}$$

The SAR is expressed in units of watts per kilogram (W/kg) or equivalently milliwatts per gram (mW/g), and it is related to the E-field at a point by the following equation:

$$\boldsymbol{SAR = \frac{\sigma |E|^2}{\rho}}$$

Where:
σ = conductivity of the tissue (S/m)
ρ = mass density of the tissue (kg/m^3)
E = RMS electrical field strength (V/m)

5.2. SAR Measurement Setup

The SAR measurements are performed using Dosimetric Assessment System (DASY) made by Schmid & Partner Engineering AG, which is a robot-based high precision electromagnetic (EM) near-field scanning platform. The DASY system measures the precise locations of the near-field radiators of highly non-isotropic fields. A sophisticated measurement system with a variety of probes (SAR, E-field, H-field etc.) combined with a high-precision 6-axis robot positioner allows for completely automated measurement scans and evaluations with both field and position information, e.g., volume averages, peak search, and extrapolations.

SPEAG DASY8 SAR Measurement System Setup

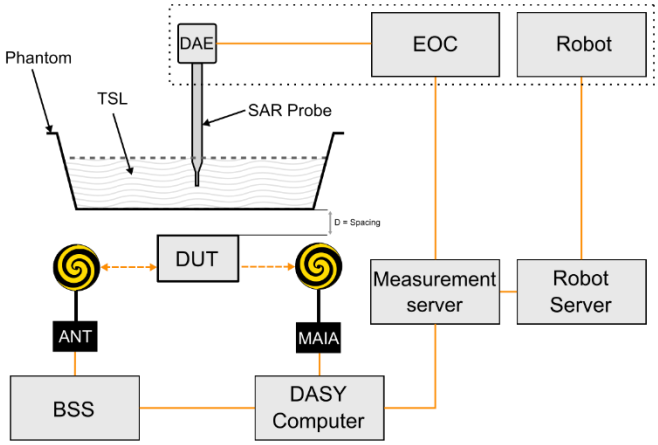

The DASY8 system for SAR measurements consists of:

- 6-axis robotic arm (Stäubli TX2-90XL) for positioning the probe.
- Mounting Platform for keeping the phantoms at a fixed location relative to the robot.
- Measurement Server for handling all time-critical tasks, such as measurement data acquisition and supervision of safety features.
- EOC (Electrical to Optical Converter) for converting the optical signal from the DAE to electrical before being transmitted to the measurement server.
- LB (Light-Beam unit) for probe alignment (measurement of the exact probe length and eccentricity).
- SAR probe (EX3D, ES3D probes) for measuring the E-field distribution in the phantom. The SAR distribution and the psSAR (peak spatial averaged SAR) are derived from the E-field measurement.
- SAR phantom that represents a physical model with an equivalent human anatomy. A Specific Anthropomorphic Mannequin (SAM) head is usually used for handheld devices, and a Flat phantom is used for body-worn devices. Specific phantoms are available if the Device Under Test (DUT) is intended for operation on different parts of the body other than the head or torso (e.g., the wrist).
- TSL (Tissue Simulating Liquid) representing the dielectric properties of used tissue.
- DAE (Data Acquisition Electronics) for reading the probe voltages and transmitting it to the DASY8 control PC.
- Device Holder for positioning the DUT beneath the phantom.
- MAIA (Modulation and Interference Analyzer) for confirming the accuracy of the probe linearization parameters.
- ANT (wide-band Antenna) for broadcasting the downlink signals emitted by base station simulators to the DUT.
- Control PC for running the DASY8 software to define/execute the measurements.
- System validation kits for system check / validation purposes.

5.2.1 E-Field Probes

Model	EX3DV4	
Construction	Symmetrical design with triangular core. Built-in shielding against static charges. PEEK enclosure material (resistant to organic solvents, e.g., DGBE).	
Frequency	4 MHz to 10 GHz Linearity: ± 0.2 dB	
Directivity	± 0.1 dB in TSL (rotation around probe axis) ± 0.3 dB in TSL (rotation normal to probe axis)	
Dynamic Range	10 µW/g to 100 mW/g Linearity: ± 0.2 dB (noise: typically < 1 µW/g)	
Dimensions	Overall length: 337 mm (Tip: 20 mm) Tip diameter: 2.5 mm (Body: 12 mm) Typical distance from probe tip to dipole centers: 1 mm	

5.2.2 Data Acquisition Electronics (DAE)

Model	DAE3, DAE4	
Construction	Signal amplifier, multiplexer, A/D converter and control logic. Serial optical link for communication with DASY embedded system (fully remote controlled). Two step probe touch detector for mechanical surface detection and emergency robot stop.	
Measurement Range	-100 to +300 mV (16-bit resolution and two range settings: 4mV, 400mV)	
Input Offset Voltage	< 5µV (with auto zero)	
Input Bias Current	< 50 fA	
Dimensions	60 x 60 x 68 mm	

5.2.3 Phantoms

Model	SAM-Twin Phantom	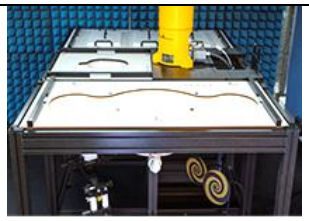
Construction	The shell corresponds to the specifications of the Specific Anthropomorphic Mannequin (SAM) phantom defined in IEEE Std 1528 and IEC 62209-1. It enables the dosimetric evaluation of left and right hand phone usage as well as body-mounted usage at the flat phantom region. A cover prevents evaporation of the liquid. Reference markings on the phantom allow the complete setup of all predefined phantom positions and measurement grids by teaching three points with the robot.	
Material	Vinylester, fiberglass reinforced (VE-GF)	
Shell Thickness	2 ± 0.2 mm (6 ± 0.2 mm at ear point)	
Dimensions	Length: 1000 mm Width: 500 mm Height: adjustable feet	
Filling Volume	approx. 25 liters	

Model	ELI	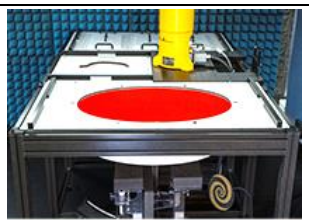
Construction	The ELI phantom is used for compliance testing of handheld and body-mounted wireless devices. ELI is fully compatible with the IEC 62209-2 standard and all known tissue simulating liquids. ELI has been optimized regarding its performance and can be integrated into our standard phantom tables. A cover prevents evaporation of the liquid. Reference markings on the phantom allow installation of the complete setup, including all predefined phantom positions and measurement grids, by teaching three points. The phantom is compatible with all SPEAG dosimetric probes and dipoles.	
Material	Vinylester, fiberglass reinforced (VE-GF)	
Shell Thickness	2.0 ± 0.2 mm (bottom plate)	
Dimensions	Major axis: 600 mm Minor axis: 400 mm	
Filling Volume	approx. 30 liters	

5.2.4 Device Holder

Model	MD4HHTV5 - Mounting Device for Hand-Held Transmitters	
Construction	In combination with the Twin SAM or ELI phantoms, the Mounting Device for Hand-Held Transmitters enables rotation of the mounted transmitter device to specified spherical coordinates. At the heads, the rotation axis is at the ear opening. Transmitter devices can be easily and accurately positioned according to IEC 62209-1, IEEE 1528, FCC, or other specifications. The device holder can be locked for positioning at different phantom sections (left head, right head, flat).	
Material	Polyoxymethylene (POM)	

Model	MDA4WTV5 - Mounting Device Adaptor for Ultra-Wide Transmitters	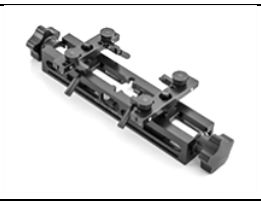
Construction	An upgrade kit to Mounting Device to enable easy mounting of wider devices like big smart-phones, e-books, small tablets, etc. It holds devices with width up to 140 mm.	
Material	Polyoxymethylene (POM)	

Model	MDA4SPV6 - Mounting Device Adaptor for Smart Phones	
Construction	The solid low-density MDA4SPV6 adaptor assuring no impact on the DUT radiation performance and is conform with any DUT design and shape.	
Material	ROHACELL	

Model	MD4LAPV5 - Mounting Device for Laptops and other Body-Worn Transmitters	
Construction	In combination with the Twin SAM or ELI phantoms, the Mounting Device (Body-Worn) enables testing of transmitter devices according to IEC 62209-2 specifications. The device holder can be locked for positioning at a flat phantom section.	
Material	Polyoxymethylene (POM), PET-G, Foam	

5.2.5 Power Source

Model	Powersource1	
Signal Type	Continuous Wave	
Operating Frequencies	600 MHz to 5850 MHz	
Output Power	-5.0 dBm to +17.0 dBm	
Power Supply	5V DC, via USB jack	
Power Consumption	<3 W	
Applications	System performance check and validation with a CW signal.	

5.2.6 System Validation Dipoles

Model	D-Serial	
Construction	Symmetrical dipole with l/4 balun. Enables measurement of feed point impedance with NWA. Matched for use near flat phantoms filled with tissue simulating solutions.	
Frequency	750 MHz to 5800 MHz	
Return Loss	> 20 dB	
Power Capability	> 100 W (f < 1GHz), > 40 W (f > 1GHz)	

5.2.7 Tissue Simulating Liquids

The dielectric properties of the tissue simulating liquids are referred to KDB 865664 D01, IEEE Std 1528 and IEC/IEEE 62209-1528. For SAR measurement of the field distribution inside the phantom, the phantom has been filled with head tissue-equivalent medium. To minimize reflections within the phantom, the depth of the homogeneous medium is greater than or equal to 15 cm. For head SAR testing, the liquid height was measured from the phantom ear reference point (ERP) to the top surface of the tissue simulating liquid. For body and extremity SAR testing, the liquid height was measured from the center of the flat phantom to the top surface of the tissue simulating liquid.

The following table gives the recipes for tissue simulating liquids.

Tissue Type	Water	Tween 20	Oxidized Mineral Oil	Diethylenglycol Monohexylether	Triton X-100	NaCl
835	50.36 %	48.39 %				1.25 %
900	50.31 %	48.34 %				1.35 %
1800	56.00 %		44.00 %			
2450	56.00 %		44.00 %			
4000	56.00 %		44.00 %			
5000	56.00 %		44.00 %			
5200	65.53 %			17.24 %	17.24 %	
5800	65.53 %			17.24 %	17.24 %	
6000	56.00 %		44.00 %			
8000	67.80 %	31.10 %				
10000	66.00 %	33.00 %				

Before SAR measurement, the dielectric properties of the tissue simulating liquid were verified using a dielectric assessment kit and a network analyzer. Since the range of ±10 % of the required target values is used to measure relative permittivity and conductivity, the SAR correction procedure is applied to correct measured SAR for the deviations in permittivity and conductivity. Only positive correction has been used to scale up the measured SAR, and SAR result would not be corrected if the correction ΔSAR has a negative sign. The nominal dielectric values of the tissue simulating liquids in the phantom and the tolerance of 10 % are listed in below.

Frequency (MHz)	Target Permittivity	±10 % Range of Permittivity	Target Conductivity	±10 % Range of Conductivity
750	41.9	37.7 ~ 46.1	0.89	0.80 ~ 0.98
835	41.5	37.4 ~ 45.7	0.90	0.81 ~ 0.99
900	41.5	37.4 ~ 45.7	0.97	0.87 ~ 1.07
1450	40.5	36.5 ~ 44.6	1.20	1.08 ~ 1.32
1800	40.0	36.0 ~ 44.0	1.40	1.26 ~ 1.54
1900	40.0	36.0 ~ 44.0	1.40	1.26 ~ 1.54
1950	40.0	36.0 ~ 44.0	1.40	1.26 ~ 1.54
2000	40.0	36.0 ~ 44.0	1.40	1.26 ~ 1.54
2100	39.8	35.8 ~ 43.8	1.49	1.34 ~ 1.64
2450	39.2	35.3 ~ 43.1	1.80	1.62 ~ 1.98
2600	39.0	35.1 ~ 42.9	1.96	1.76 ~ 2.16
3000	38.5	34.7 ~ 42.4	2.40	2.16 ~ 2.64
3500	37.9	34.1 ~ 41.7	2.91	2.62 ~ 3.20
4000	37.4	33.7 ~ 41.1	3.43	3.09 ~ 3.77
4500	36.8	33.1 ~ 40.5	3.94	3.55 ~ 4.33
5000	36.2	32.6 ~ 39.8	4.45	4.01 ~ 4.90
5200	36.0	32.4 ~ 39.6	4.66	4.19 ~ 5.13
5400	35.8	32.2 ~ 39.4	4.86	4.37 ~ 5.35
5600	35.5	32.0 ~ 39.1	5.07	4.56 ~ 5.58
5800	35.3	31.8 ~ 38.8	5.27	4.74 ~ 5.80
6000	35.1	31.6 ~ 38.6	5.48	4.93 ~ 6.03
6500	34.5	31.1 ~ 38.0	6.07	5.46 ~ 6.68
7000	33.9	30.5 ~ 37.3	6.65	5.99 ~ 7.32
7500	33.3	30.0 ~ 36.6	7.24	6.52 ~ 7.96
8000	32.7	29.4 ~ 36.0	7.84	7.06 ~ 8.62
8500	32.1	28.9 ~ 35.3	8.46	7.61 ~ 9.31
9000	31.6	28.4 ~ 34.8	9.08	8.17 ~ 9.99
9500	31.0	27.9 ~ 34.1	9.71	8.74 ~ 10.68
10000	30.4	27.4 ~ 33.4	10.40	9.36 ~ 11.44

5.3. SAR Test Procedures

According to the SAR test standard, the recommended procedure for assessing the peak spatial-average SAR value consists of the following steps:

[1] Power Reference measurement
[2] Area Scan
[3] Zoom Scan
[4] Power Drift measurement

5.3.1 Power Reference Measurement

The Power Reference measurement and Power Drift measurement are for monitoring the power drift of the DUT in the batch process. The minimum distance of probe sensors to surface determines the closest measurement point to phantom surface. The minimum distance of probe sensors to surface is 2.1 mm. This distance cannot be smaller than the distance of sensor calibration points to probe tip as defined in the probe properties.

5.3.2 Area Scan Measurement

The Area Scan is used as a fast scan in two dimensions to find the area of high field values, before doing a fine measurement around the hot spot. The sophisticated interpolation routines implemented in DASY software can find the maximum locations even in relatively coarse grids. When an Area Scan has measured all reachable points, it computes the field maximal found in the scanned area, within a range of the global maximum. The range (in dB) is specified in the standards for compliance testing. For example, a 2 dB range is required in IEC/IEEE 62209-1528. If only one Zoom Scan follows the Area Scan, then only the absolute maximum will be taken as reference. For cases where multiple maximums are detected, the number of Zoom Scans has to be increased accordingly. Following table provides the measurement parameters required for the area scan.

Parameter	f ≤ 3 GHz	f > 3 GHz
Maximum distance from closest measurement point to phantom surface	5 ±1 mm	½ δ ln(2) ±0.5 mm
Maximum probe angle from probe axis to phantom surface normal at the measurement location	30° ±1°	20° ±1°
Maximum area scan spatial resolution：Δx_{Area}, Δy_{Area}	≤ 2 GHz：≤ 15 mm 2 ~ 3 GHz：≤ 12 mm	3 ~ 4 GHz：≤ 12 mm 4 ~ 6 GHz：≤ 10 mm 6 ~ 7 GHz：≤ 7.5 mm

From the scanned SAR distribution, identify the position of the maximum SAR value, in addition identify the positions of any local maxima with SAR values within 2 dB of the maximum value that will not be within the zoom scan of other peaks. Additional peaks shall be measured only when the primary peak is within 2 dB of the SAR compliance limit (e.g., 1.0 W/kg for 1.6 W/kg 1g SAR limit; or 1.26 W/kg for 2.0 W/kg 10g SAR limit).

5.3.3 Zoom Scan Measurement

The Zoom Scan are used to assess the peak spatial SAR values within a cubic averaging volume containing 1 g and 10 g of simulated tissue. The Zoom Scan measures points (refer to table below) within a cube whose base faces are centered on the maxima found in a preceding area scan job within the same procedure. When the measurement is done, the Zoom Scan evaluates the averaged SAR for 1 g and 10 g and displays these values next to the job's label.

The Zoom Scan (three-dimensional SAR distribution) is performed at the local maxima locations identified in previous area scan procedure. The zoom scan volume must be larger than the required minimum dimensions. When graded grids are used, which only applies in the direction normal to the phantom surface, the initial grid separation closest to the phantom surface and subsequent graded grid increment ratios must satisfy the required protocols. The 1 g SAR averaging volume must be fully contained within the zoom scan measurement volume boundaries; otherwise, the measurement must be repeated by shifting or expanding the zoom scan volume. The similar requirements also apply to 10 g SAR measurements. Following table provides the measurement parameters required for the zoom scan.

Parameter		f ≤ 3 GHz	f > 3 GHz
Maximum zoom scan spatial resolution: Δx_{Zoom}, Δy_{Zoom}		≤ 2 GHz：≤ 8 mm 2 ~ 3 GHz：≤ 5 mm	3 ~ 4 GHz：≤ 5.0 mm 4 ~ 6 GHz：≤ 4.0 mm 6 ~ 7 GHz：≤ 3.4 mm
Maximum zoom scan spatial resolution, normal to phantom surface	*uniform grid*：$\Delta z_{Zoom}(n)$	≤ 5 mm	3 ~ 4 GHz：≤ 4.0 mm 4 ~ 5 GHz：≤ 3.0 mm 5 ~ 7 GHz：≤ 2.0 mm
	graded grids：$\Delta z_{Zoom}(1)$	≤ 4 mm	3 ~ 4 GHz：≤ 3.0 mm 4 ~ 5 GHz：≤ 2.5 mm 5 ~ 6 GHz：≤ 2.0 mm 6 ~ 7 GHz：≤ 1.7 mm
	$\Delta z_{Zoom}(n>1)$	≤ $1.5 \cdot \Delta z_{Zoom}(n-1)$ mm	
Minimum zoom scan volume (x, y, z)		≥ 30 mm	3 ~ 4 GHz：≥ 28 mm 4 ~ 5 GHz：≥ 25 mm 5 ~ 7 GHz：≥ 22 mm

Per IEC 62209-2 AMD1, the successively higher resolution zoom scan is required if the zoom scan measured as defined above complies with both of the following criteria, or if the peak spatial-average SAR is below 0.1 W/kg, no additional measurements are needed:

[1] The smallest horizontal distance from the local SAR peaks to all points 3 dB below the SAR peak shall be larger than the horizontal grid steps in both x and y directions (Δx, Δy). This shall be checked for the measured zoom scan plane conformal to the phantom at the distance zM1.

[2] The ratio of the SAR at the second measured point (M2) to the SAR at the closest measured point (M1) at the x-y location of the measured maximum SAR value shall be at least 30 %.

If one or both of the above criteria are not met, the zoom scan measurement shall be repeated using a finer resolution. New horizontal and vertical grid steps shall be determined from the measured SAR distribution so that the above criteria are met. Compliance with the above two criteria shall be demonstrated for the new measured zoom scan.

5.3.4 Power Drift Measurement

The Power Drift measurement measures the field at the same location as the most recent power reference measurement within the same procedure, and with the same settings. The Power Drift measurement gives the field difference in dB from the reading conducted within the last Power Reference measurement. This allows a user to monitor the power drift of the device under test within a batch process. The measurement procedure is the same as Power Reference measurement. If the power drift more than 5 %, the SAR measurement will be retested.

5.3.5 Spatial Peak SAR Evaluation

The procedure for spatial peak SAR evaluation has been implemented according to the test standard. It can be conducted for 1 g and 10 g, as well as for user-specific masses. The DASY software includes all numerical procedures necessary to evaluate the spatial peak SAR value.

The base for the evaluation is a "cube" measurement. The measured volume must include the 1 g and 10 g cubes with the highest averaged SAR values. For that purpose, the center of the measured volume is aligned to the interpolated peak SAR value of a previously performed area scan.

The entire evaluation of the spatial peak values is performed within the post-processing engine (SEMCAD). The system always gives the maximum values for the 1 g and 10 g cubes. The algorithm to find the cube with highest averaged SAR is divided into the following stages:

[1] Extraction of the measured data (grid and values) from the Zoom Scan
[2] Calculation of the SAR value at every measurement point based on all stored data (A/D values and measurement parameters)
[3] Generation of a high-resolution mesh within the measured volume
[4] Interpolation of all measured values form the measurement grid to the high-resolution grid
[5] Extrapolation of the entire 3-D field distribution to the phantom surface over the distance from sensor to surface
[6] Calculation of the averaged SAR within masses of 1 g and 10 g

5.3.6 SAR Averaged Methods

In DASY, the interpolation and extrapolation are both based on the modified Quadratic Shepard's method. The interpolation scheme combines a least-square fitted function method and a weighted average method which are the two basic types of computational interpolation and approximation.

Extrapolation routines are used to obtain SAR values between the lowest measurement points and the inner phantom surface. The extrapolation distance is determined by the surface detection distance and the probe sensor offset. The uncertainty increases with the extrapolation distance. To keep the uncertainty within 1 % for the 1 g and 10 g cubes, the extrapolation distance should not be larger than 5 mm.

5.3.7 Volume Scan Measurement

The volume scan is used for assessing overlapping SAR distributions for antennas transmitting in different frequency bands. It is equivalent to an oversized zoom scan used in standalone measurements. The measurement volume will be used to enclose all the simultaneous transmitting antennas. For antennas transmitting simultaneously in different frequency bands, the volume scan is measured separately in each frequency band. In order to sum correctly to compute the 1g aggregate SAR, the DUT remain in the same test position for all measurements and all volume scans use the same spatial resolution and grid spacing. When all volume scans were completed, the software, SEMCAD postprocessor can combine and subsequently superpose these measurement data to calculating the multiband SAR.

5.3.8 Absorbed Power Density Conversion

The Absorbed Power Density (APD) will be derived from the measured SAR values. According to SPEAG application note and DASY8 manual, the APD is evaluated numerically using the FDTD method of Sim4Life software and averaged over square surface areas of 1 cm^2 and 4 cm^2 in the lowermost voxel layer of a flat phantom at a frequency of 6.5 GHz. The phantom consists of a dielectric shell of 2 mm thickness and a relative permittivity 3.7.

5.4. Incident Power Density Definition

The incident power density for an electromagnetic field represents the rate of energy transfer per unit area. The local power density (i.e., Poynting vector) at a given spatial point is deduced from electromagnetic fields by the following formula:

$$\boldsymbol{S} = \frac{\mathbf{1}}{\mathbf{2}}\boldsymbol{Re}\{\boldsymbol{E} \times \boldsymbol{H}^{*}\} \cdot \vec{\boldsymbol{n}}$$

Where: E is the complex electric field peak phasor and H is the complex conjugate magnetic field peak phasor.

The spatial-average power density distribution on the evaluation surface is determined per the IEC TR 63170. The spatial area, A is specified by the applicable exposure limit or regulatory requirements. The circular shape was used.

$$\boldsymbol{S} = \frac{\mathbf{1}}{\mathbf{2}\boldsymbol{A}}\Re\left(\int \boldsymbol{E} \times \boldsymbol{H}^{*} \cdot \hat{\boldsymbol{n}}\boldsymbol{dA}\right)$$

5.5. Incident Power Density Measurement Setup

The DASY8 system combines a sophisticated measurement system with a variety of probes (SAR, E- field, H-field, temperature, etc.) and a high-precision 6-axis robot positioner. The combination allows for completely automated measurement scans and evaluations with both field and position information, e.g., volume averages, peak search, and extrapolations. The main purpose is to perform near-field measurements of radiators of highly non-isotropic fields for which the exact measurement location is critical.

The special application area described in the system handbook is IPD measurement in the 6 GHz– 110 GHz frequency range.

SPEAG DASY8 Power Density Measurement System Setup

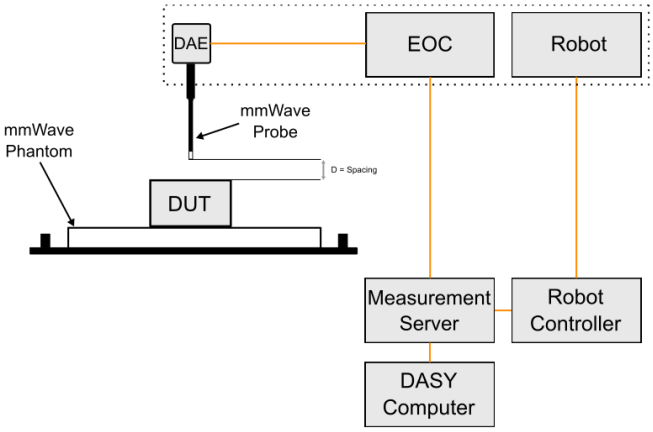

The DASY8 system for Incident Power Density measurements consists of:

- 6-axis robotic arm (Stäubli TX2-90XL) for positioning the probe.
- Mounting Platform for maintaining the phantoms at a fixed location relative to the robot.
- Measurement Server that handles all time-critical tasks, such as measurement data acquisition and supervision of safety features.
- Electrical to Optical Converter (EOC) for converting the optical signal from the DAE to electrical before being transmitted to the measurement server.
- Light Beam unit for probe alignment (measurement of the exact probe length and eccentricity).
- A millimeter Wave (mm-Wave) probe (EummWVx) for measuring the E-field magnitude. The polarization ellipses and the power density are then derived.
- A mm-Wave phantom used as the test bed.
- DAE that reads the probe voltages and transmits it to the DASY8 control PC.
- A mm-Wave Device Holder for positioning the DUT on top of the phantom.
- Control PC that runs the DASY8 software for defining / executing the measurements.
- System verification sources for system performance checks.

5.5.1 mm-Wave E-Field Probe

Model	EUmmWVx	
Frequency	750 MHz to 110 GHz	
Dynamic Range	< 20 V/m ~ 10000 V/m with PRE-10 (min < 20 V/m ~ 2000 V/m)	
Linearity	< ±0.2 dB	
Hemispherical Isotropy	< 0.5 dB	
Position Precision	< 0.2 mm	
Dimensions	Overall length: 320 mm (tip: 20 mm) Tip diameter: encapsulation 8 mm (internal sensor < 1 mm) Distance from probe tip to dipole centers: < 2 mm Sensor displacement to probe's calibration point: < 0.3 mm	

The EUmmWVx probe is an electric (E) universal (U) field probe with two dipole sensors for field measurements at frequencies up to 110 GHz and as close as 2 mm from any field source or transmitter. The sensors consist of two diode-loaded small dipoles that provide the rectified voltage from the coupled E-field. From the voltages at three different orientations in the field at known angles, both the magnitude of the field component and the field polarization can be calculated. Due to the small size of the sensors, the probe can be used for measurements over an extremely wide frequency range from 750 MHz to 110 GHz. The probe sensors are protected by non-removable 8 mm high-density foam.

The EUmmWVx probe is based on the pseudo-vector probe design, which not only measures the field magnitude but also derives its polarization ellipse. This probe concept also has the advantage that the sensor angle errors or distortions of the field by the substrate can be largely nullified by calibration. This is particularly important as, at these very high frequencies, field distortions by the substrate are dependent on the wavelength. The design entails two small 0.8 mm dipole sensors mechanically protected by high-density foam, printed on both sides of a 0.9 mm wide and 0.12 mm thick glass substrate. The body of the probe is specifically constructed to minimize distortion by the scattered fields.

The probe consists of two sensors with different angles arranged in the same plane in the probe axis. Three or more measurements of the two sensors are taken for different probe rotational angles to derive the amplitude and polarization information. These probes are the most flexible and accurate probes currently available for measuring field amplitude.

The probe design allows measurements at distances as small as 2 mm from the sensors to the surface of the device under test (DUT). The typical sensor to probe tip distance is 1.5 mm. The exact distance is calibrated.

Illustration of the Distance Sensor to the DUT Surface

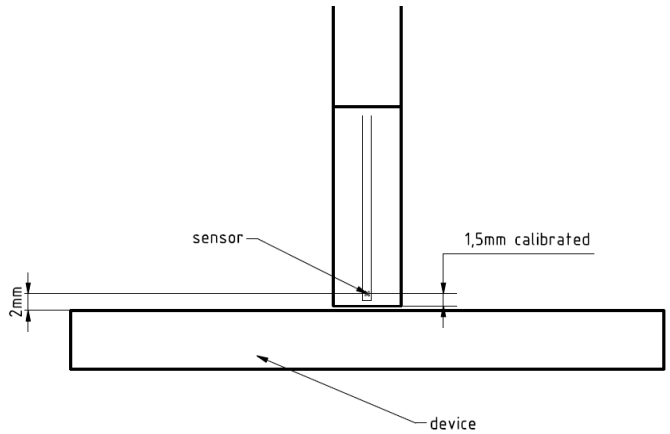

5.5.2 System Verification Sources

Model	System Verification for X-band	
Calibrated Frequency	10 GHz	
E-field Polarization	Linear	
Max Input Power	20 W	
Connector	SMA	
Operation	requires a stable source with known forward power to perform system performance check or validation	
Weight	700 g	

Model	System Verification for Ka-band, V-band, W-band	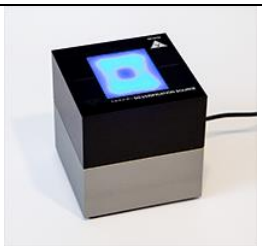
Calibrated Frequency	30 GHz, 60 GHz	
Frequency Accuracy	±100 MHz	
Harmonics	-20 dBc	
Total Radiated Power	14 dBm for 30 GHz, 20 dBm for 60 GHz	
Power Stability	0.05 dB for 30 GHz, 0.1 dB for 60 GHz	
Dimensions	100 x 100 x 100 mm	

5.6. Incident Power Density Measurement Procedure

Within a short distance from the transmitting source, power density is determined based on both electric and magnetic fields. Generally, the magnitude and phase of two components of either the E-field or H-field are needed on a sufficiently large surface to fully characterize the total E-field and H-field distributions. Nevertheless, solutions based on direct measurement of E-field and H-field can be used to compute power density. When the measurement surface does not correspond to the evaluation surface, reconstruction algorithms are necessary to project or transform the fields from the measurement surface to the evaluation surface. The general measurement approach is summarized in following:

[1] Measure the E-field on the measurement surface at a reference location where the field is well above the noise level. This reference level will be used at the end of this procedure to assess output power drift of the DUT during the measurement.

[2] Scan the electric field on the measurement surface. The requirements of measurement surface dimensions and spatial resolution are dependent on the measurement system and assessment methodology applied. Measurements are therefore conducted according to the instructions provided by the measurement system manufacturer.

[3] Measurement spatial resolution can depend on the measured field characteristic and measurement methodology used by the system. Planar scanners typically require a step size of less than λ/2. When measurements are acquired in regions where evanescent modes are not negligible, smaller spatial resolution may be required. Similar criteria also apply to cylindrical scanning systems where the spatial resolution in the vertical direction should be less than λ/2.

[4] Since only E-field is measured on the measurement system, the H-field is calculated from the measured field using a reconstruction algorithm. As power density requires knowledge of both amplitude and phase, reconstruction algorithms can also be used to obtain field information from the measured data (e.g., the phase from the amplitude if only the amplitude is measured). The measurement involves two planes with three different probe rotations on two measurement planes separated by λ/4. The grid steps are optimized by the software based on the test frequency. The location of the lowest measurement plane is defined by the distance of first measurement layer from device under test entered by the user. In addition, when the measurement surface does not correspond to the evaluation surface, reconstruction algorithms are employed to project or transform the fields from the measurement surface to the evaluation surface. In substance, reconstruction algorithms are the set of algorithms, mathematical techniques and procedures that are applied to the measured field on the measurement surface to determine E- and H-field (amplitude and phase) on the evaluation surface.

[5] To determine the spatial-average power density distribution on the evaluation surface. The spatial averaging area, A, is specified by the applicable exposure limits or regulatory requirements. If the shape of the area is not provided by the relevant regulatory requirements, a circular shape is recommended.

[6] Measure the E-field on the measurement surface position at the reference location chosen in step [1]. The power drift of the DUT is estimated as the difference between the squared amplitude of the field values taken in steps [1] and [6]. When the drift is smaller than ±5 %, this term should be considered in the uncertainty budget. Drifts larger than 5 % due to the design and operating characteristics of the device should be accounted for or addressed according to regulatory requirements to determine compliance.

5.6.1 Computation of the Electric Field Polarization Ellipse

For the numerical description of an arbitrarily oriented ellipse in three-dimensional space, five parameters are needed: the semi-major axis (*a*), the semi-minor axis (*b*), two angles describing the orientation of the normal vector of the ellipse (Φ, θ), and one angle describing the tilt of the semi-major axis (ψ). For the two extreme cases, i.e., circular and linear polarizations, only three parameters (*a*, Φ, and θ) are sufficient for the description of the incident field.

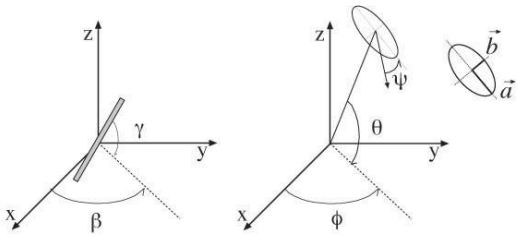

For the reconstruction of the ellipse parameters from measured data, the problem can be reformulated as a nonlinear search problem. The semi-major and semi-minor axes of an elliptical field can be expressed as functions of the three angles (Φ, θ, and ψ). The parameters can be uniquely determined to minimize the error based on least-squares for the given set of angles and the measured data. In this way, the number of free parameters is reduced from five to three, which means that at least three sensor readings are necessary to gain sufficient information for the reconstruction of the ellipse parameters. However, to suppress the noise and increase the reconstruction accuracy, it is desirable to overdetermine the system of equations. The solution to use a probe consisting of two sensors angled by γ_1 and γ_2 toward the probe axis and to perform measurements at three angular positions of the probe, i.e., at β_1, β_2, and β_3, results in overdeterminations by a factor of two. If more information or increased accuracy is required, more rotation angles can be added.

The reconstruction of the ellipse parameters can be separated into linear and non-linear parts that are best solved by the Givens algorithm combined with a downhill simplex algorithm. To minimize the mutual coupling, sensor angles are set with a shift of 90° ($\gamma_2 = \gamma_1 + 90°$), and, for simplification, the first rotation angle of the probe (β_1) can be set to 0°.

5.6.2 Total Field and Power Flux Density Reconstruction

Plane-to-Plane Phase Reconstruction (PTP-PR)

Computation of the IPD in general requires knowledge of the electric (E-) and magnetic (H-) field amplitudes and phases in the plane of incidence. Reconstruction of these quantities from pseudo-vector E-field measurements is feasible, as they are constrained by Maxwell's equations.

The Plane-to-Plane Phase Reconstruction (PTP-PR) reconstruction approach based on the Gerchberg-Saxton algorithm, which benefits from the availability of the E-field polarization ellipse information obtained with the EUmmWVx probe. This reconstruction algorithm, together with the ability of the probe to measure extremely close to the source without perturbing the field, permits reconstruction of the E- and H-fields and the IPD on measurement planes located as near as λ/2π. At closer distances, the uncertainty might be larger.

Equivalent Source Reconstruction (ESR) (Recommended)

In order to overcome the main limitations of PTP-PR at distances d ≤ λ/2π from the DUT, i.e., in the reactive near-field and beyond planar evaluation surfaces, SPEAG have joined forces in a research collaboration to develop a novel equivalent source reconstruction (ESR) algorithm, that models an unknown and inaccessible transmitter not anymore in terms of plane waves but as a set of distributed known auxiliary sources below the surface of the device enclosure. The locations, amplitudes, and phases of these sources are then determined to reconstruct the measured near-fields optimally. As a result, the transmitters inside any enclosure can be replaced with these equivalent sources in any radiation problem, including exposure assessment scenarios. ESR even enables back transformation within a limited range.

This approach has three main advantages:

- Lower reconstruction errors in the reactive near-field regions, which ease compliance testing of DUT operating in the 6 ~ 24 GHz frequency range.
- Evaluation of phones with non-planar surfaces, e.g., a flat surface with a protruding camera module.
- Possibility to perform phase reconstruction in any parts of the radiation region without any limitation to planar measurement domains. In other words, measurements can be done on a conformal surface or even on scattered points in the radiation domain and still obtain reliable data on the phase variations. This opens the way for evaluations on non-planar device surfaces (e.g., virtual- reality goggles) and enables full-wave simulations using measurement results only, i.e., without requiring models for the transmitters.

5.6.3 Power Flux Density Averaging

The average of the reconstructed power density is evaluated on the measurement plane. Two averaging geometries are available: a circle and a rotating square. The averaging area is defined by the user; typical values are 1 cm^2 and 4 cm^2. The three variants of the spatial-average Power Density (sPD) defined in the IEC 63195 standard are computed by integration of the Poynting vector:

- sPD_{n+}：Surface normal propagating power flux density into the phantom.
- sPD_{tot+}：Total propagating power flux density into the phantom.
- sPD_{mod+}：Total power flux density into the phantom considering near-field exposure.

6. System Verification

6.1. SAR Tissue Simulating Liquid Verification

The tissue dielectric parameters of tissue-equivalent media used for SAR measurements must be characterized within a temperature range of 18 °C to 25 °C, measured with calibrated instruments and apparatuses, such as network analyzers and temperature probes. The temperature of the tissue-equivalent medium during SAR measurement must also be within 18 °C to 25 °C and within ±2 °C of the temperature when the tissue parameters are characterized. The tissue dielectric measurement system must be calibrated before use. The dielectric parameters must be measured before the tissue-equivalent medium is used in a series of SAR measurements. The parameters should be re-measured after each 3 ~ 4 days of use; or earlier if the dielectric parameters can become out of tolerance; for example, when the parameters are marginal at the beginning of the measurement series.

The dielectric constant (*εr*) and conductivity (*σ*) of typical tissue-equivalent media recipes are expected to be within ±5 % of the required target values; but for SAR measurement systems that have implemented the SAR error compensation algorithms documented in IEEE Std 1528-2013, to automatically compensate the measured SAR results for deviations between the measured and required tissue dielectric parameters, the tolerance for *εr* and *σ* can be relaxed to ±10 %.

Frequency (MHz)	Ambient Temp. (℃)	Tissue Temp. (℃)	Permittivity (εr)	Conductivity (σ)	Targeted Permittivity (εr)	Targeted Conductivity (σ)	Deviation Permittivity (εr) (%)	Deviation Conductivity (σ) (%)	Date
2450	22.2	21.5	42.610	1.803	39.2	1.8	8.70	0.17	Jan. 18, 2026
5250	22.1	21.4	39.116	4.595	35.9	4.71	8.96	-2.44	Jan. 20, 2026
5600	22.2	21.4	38.766	4.900	35.5	5.07	9.20	-3.35	Jan. 21, 2026
5800	22.1	21.3	38.275	5.223	35.3	5.27	8.43	-0.89	Jan. 22, 2026
6500	22	21.3	37.000	6.180	34.5	6.07	7.25	1.81	Jan. 14, 2026

6.2. SAR Test System Verification

The SAR system verification is required to confirm measurement accuracy, according to the tissue dielectric media, probe calibration points and other system operating parameters required for measuring the SAR of a test device. The system verification must be performed for each frequency band and within the valid range of each probe calibration point required for testing the device. The same SAR probe(s) and tissue equivalent media combinations used with each specific SAR system for system verification must be used for device testing. When multiple probe calibration points are required to cover substantially large transmission bands, independent system verifications are required for each probe calibration point. A system verification must be performed before each series of SAR measurements using the same probe calibration point and tissue-equivalent medium.

The system check verifies that the system operates within its specifications. It is performed daily or before every SAR measurement. The system check uses normal SAR measurements in the flat section of the phantom with a matched dipole at a specified distance. For frequency ≤ 6 GHz, the SPEAG Powersource1 is used as signal source. For frequency > 6 GHz, the signal generator is used as signal source. The Powersource1 is a portable and very stable RF source providing a continuous wave (CW) signal. It is designed for conducting system checks and system validation and is compatible with international standards, and has been calibrated by SPEAG's ISO 17025 accredited calibration center. When using Powersource1, the setup can be simplified. The signal purity is warranted by design. Since the Powersource1 is calibrated, no additional equipment is needed and the Powersource1 can directly be connected to the SMA connector of the dipole without a cable as all separate components (signal generator, amplifier, coupler and power meter) are built into the unit. The system verification setup is shown as below.

System Check Setup for ≤ 6 GHz

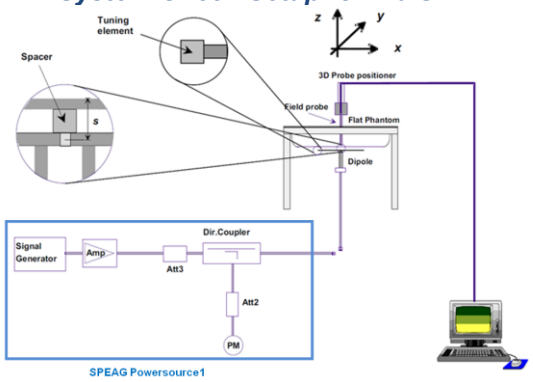

System Check Setup for > 6 GHz

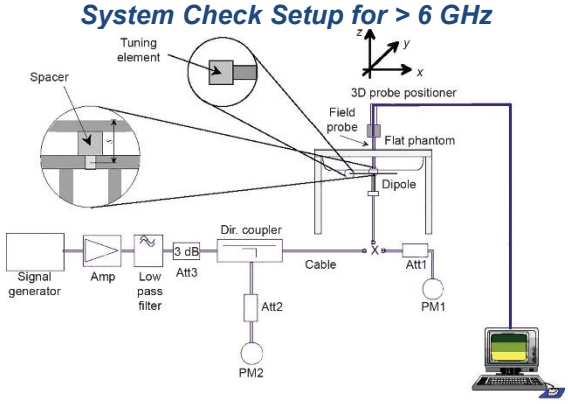

The validation dipole is placed beneath the flat phantom with the specific spacer in place. The distance spacer is touched the phantom surface with a light pressure at the reference marking and be oriented parallel to the long side of the phantom. Before the system check testing, the Powersource1 will be adjusted for the desired forward power of 17 dBm (50 mW) or the signal generator will be adjusted for desired forward power of 20 dBm (100 mW) at the dipole connector and the RF output power would be turned on. After system check testing, the SAR result will be normalized to 1 W forward input power and compared with the reference SAR value derived from validation dipole certificate report. The deviation of system check should be within 10 %.

Date	Frequency (MHz)	Targeted 1g SAR (W/kg)	Measured 1g SAR (W/kg)	Normalized 1g SAR (W/kg)	Deviation (%)	Dipole S/N	Probe S/N	DAE S/N	Output Power (dBm)
Jan. 18, 2026	2450	52.6	2.58	51.48	-2.13	712	7647	1253	17
Jan. 20, 2026	5250	79.9	3.76	75.02	-6.11	1021	7647	1253	17
Jan. 21, 2026	5600	82.4	4.18	83.40	1.22	1021	7647	1253	17
Jan. 22, 2026	5800	80.9	4.01	80.01	-1.10	1021	7647	1253	17
Jan. 14, 2026	6500	298	28.7	287.00	-3.69	1016	7647	1253	20

6.3. IPD Test System Verification

The system was verified to be within ±0.66 dB of the power density targets on the calibration certificate according to the test system specification in the user's manual and calibration facility recommendation. The 0.66 dB deviation threshold represents the expanded uncertainty for system performance checks using SPEAG's mm-Wave verification sources. The same spatial resolution and measurement region used in the source calibration was applied during the system check.

The system check provides a fast and reliable method to routinely verify that the measurement system is operational with no system component failures, including probe defects, drifts or deviation from target performance requirements. A system check also verifies the repeatability of the measurement system before compliance testing.

The measurement of a verification source is started from 5G probe installed and the phantom taught. The verification source is placed on the 5G phantom. Due to the internal distance from the horn to the outer surface of the verification source, the measurement distance set in the software should be offset by -4.45 mm; e.g., for measurement of the verification source at 10 mm, the measurement distance set in the software should be 5.55 mm (10 mm - 4.45 mm).

The system check is a complete measurement using simple well-defined reference sources. Per the DASY8 specification in the user's manual and SPEAG's recommendation, the deviation threshold of ±0.66 dB represents the expanded standard uncertainty for system performance check. The system check is successful if the measured results are within ±0.66 dB tolerances to the target value shown in the calibration certificate of the verification source. The instrumentation and procedures used for system check should ensure the system is ready for performing compliance tests.

System Check Setup for 10 GHz

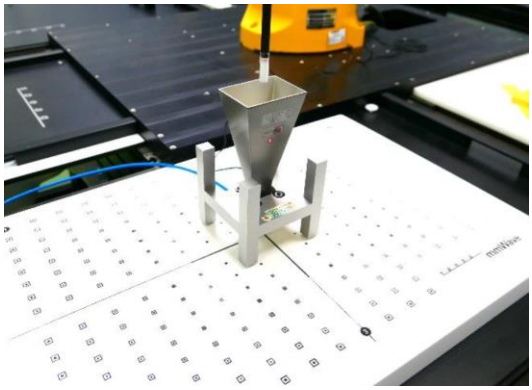

System Check Setup for 30 / 60 GHz

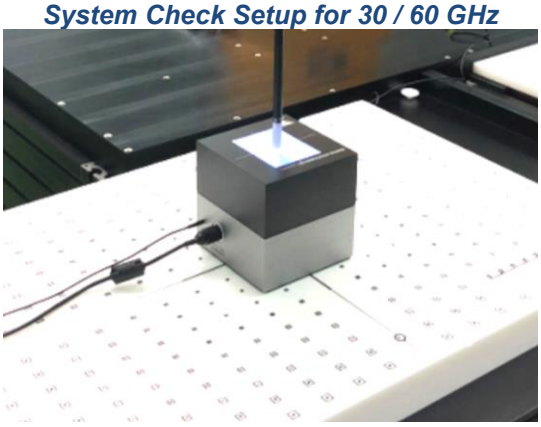

Settings for the Measurement of Verification Sources

Frequency (GHz)	Grid Step	Grid Extent X/Y (mm)	Measurement Points
10	0.125 (λ/8)	60 / 60	18 x 18
30	0.25 (λ/4)	60 / 60	26 x 26
60	0.25 (λ/4)	32.5 / 32.5	28 x 28

Date	Frequency (GHz)	Normal psPD (4 cm², W/m²)			Total psPD (4 cm², W/m²)			Note			
		Measured Value	Target Value from Cal. Report	Delta (±0.66 dB)	Measured Value	Target Value from Cal. Report	Delta (±0.66 dB)	Source S/N	Probe S/N	DAE S/N	Output Power (dBm)
Jan. 19, 2026	10G	56.6	54.2	0.19	57.1	54.6	0.19	1060	9403	1253	19.7

7. Test Configurations

7.1. Description of Test Position

7.1.1 Body Exposure Conditions

Per KDB Publication 616217 D04, SAR evaluation for laptop PC is required for the bottom surface of the keyboard. This DUT was tested in the base of DUT directly against the flat phantom. The required minimum test separation distance for incorporating transmitters and antennas into laptop computer display is determined with the display screen opened at an angle of 90° to the keyboard compartment.

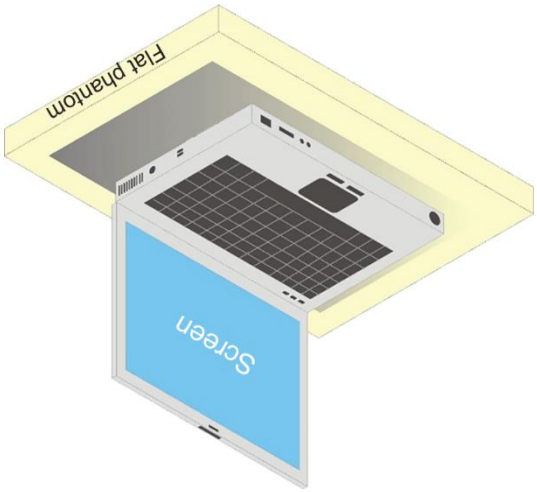

7.2. FCC General Test Procedures

7.2.1 Measured and Reported SAR

Per KDB Publication 447498 D01, when SAR is not measured at the maximum power level allowed for production units, the results must be scaled to the maximum tune-up tolerance limit according to the power applied to the individual channels tested to determine compliance. For simultaneous transmission, the measured aggregate SAR must be scaled according to the sum of the differences between the maximum tune-up tolerance and actual power used to test each transmitter. When SAR is measured at or scaled to the maximum tune-up tolerance limit, the results are referred to as reported SAR. The highest reported SAR results are identified on the grant of equipment authorization according to procedures in KDB Publication 690783 D01.

7.2.2 Measurement Condition for Wi-Fi

General Considerations

The normal network operating configurations of 802.11 transmitters are not suitable for SAR measurements. Unpredictable fluctuations in network traffic and antenna diversity conditions can introduce undesirable variations in SAR results. Various vendor specific external test software and chipset based internal test modes are typically used for SAR measurement. Chipset based test mode software is hardware dependent and generally varies among manufacturers. The device operating parameters established in test mode for SAR measurements must be identical to those programmed in production units, including output power levels, amplifier gain settings and other RF performance tuning parameters. When 802.11 frame gaps are accounted for in the transmission, a maximum transmission duty factor of 92 ~ 96 % is typically achievable in most test mode configurations. A minimum transmission duty factor of 85 % is required to avoid certain hardware and device implementation issues related to wide range SAR scaling. In addition, a periodic transmission duty factor is required for current generation SAR systems to measure SAR correctly. The reported SAR must be scaled to 100% transmission duty factor to determine compliance at the maximum tune-up tolerance limit.

According to KDB Publication 248227 D01, this device has installed WLAN engineering testing software which can provide continuous transmitting RF signal. During WLAN SAR testing, this device was operated to transmit continuously at the maximum transmission duty with specified transmission mode, operating frequency, lowest data rate, and maximum output power.

2.4 GHz Band

SAR is measured for 2.4 GHz 802.11b DSSS using either a fixed test position or, when applicable, the initial test position procedure. SAR test reduction is determined according to the following:

a) When the reported SAR of the highest measured maximum output power channel for the exposure configuration is ≤ 0.8 W/kg, no further SAR testing is required for 802.11b DSSS in that exposure configuration.

b) When the reported SAR is > 0.8 W/kg, SAR is required for that position using the next highest measured output power channel. When any reported SAR is > 1.2 W/kg, SAR is required for the third channel; i.e., all channels require testing.

2.4 GHz 802.11 g/n/ax OFDM are additionally evaluated for SAR if the highest reported SAR for 802.11b, adjusted by the ratio of the OFDM to DSSS specified maximum output power, is > 1.2 W/kg. When SAR is required for OFDM modes in 2.4 GHz band, the Initial Test Configuration Procedures should be followed. When 10g SAR measurement is considered, a factor of 2.5 is applied to the thresholds above.

U-NII-1 and U-NII-2A Bands

For devices that operate in both U-NII-1 and U-NII-2A bands, when the same maximum output power is specified for both bands, SAR measurement using OFDM SAR test procedures is not required for U-NII-1 unless the highest reported SAR for U-NII-2A is > 1.2 W/kg. When different maximum output powers are specified for the bands, SAR measurement for the U-NII band with the lower maximum output power is not required unless the highest reported SAR for the U-NII band with the higher maximum output power, adjusted by the ratio of lower to higher specified maximum output power for the two bands, is > 1.2 W/kg. When 10g SAR measurement is considered, a factor of 2.5 is applied to the thresholds above.

U-NII-2C and U-NII-3 Bands

The frequency range covered by U-NII-2C and U-NII-3 is 380 MHz (5.47 ~ 5.85 GHz), which requires a minimum of at least two SAR probe calibration frequency points to support SAR measurements. When Terminal Doppler Weather Radar (TDWR) restriction applies, the channels at 5.60 ~ 5.65 GHz in U-NII-2C band must be disabled with acceptable mechanisms and documented in the equipment certification. Unless band gap channels are permanently disabled, SAR must be considered for these channels. Each band is tested independently according to the normally required OFDM SAR measurement and probe calibration frequency points requirements.

Initial Test Position SAR Test Reduction Procedure

For exposure conditions with multiple test positions, such as handset operating next to the ear, devices with hotspot mode or UMPC mini-tablet, procedures for initial test position can be applied. Using the transmission mode determined by the DSSS procedure or initial test configuration, area scans are measured for all positions in an exposure condition. The test position with the highest extrapolated (peak) SAR is used as the initial test position. When reported SAR for the initial test position is ≤ 0.4 W/kg, no additional testing for the remaining test positions is required. Otherwise, SAR is evaluated at the subsequent highest peak SAR positions until the reported SAR result is ≤ 0.8 W/kg or all test positions are tested. When 10g SAR measurement is considered, a factor of 2.5 is applied to the thresholds above.

OFDM Transmission Mode SAR Test and Channel Selection

When the same maximum output power was specified for multiple OFDM transmission mode configurations in a frequency band or aggregated band, SAR is measured using the configuration with the largest channel bandwidth, lowest order modulation and lowest data rate. When the maximum output power of a channel is the same for equivalent OFDM configurations; for example, 802.11a, 802.11n and 802.11ac or 802.11g and 802.11n with the same channel bandwidth, modulation and data rate etc., the lower order 802.11 mode i.e., 802.11a, then 802.11n and 802.11ac or 802.11g then 802.11n, is used for SAR measurement. Per April 2019 TCB Workshop guidance, 802.11ax was considered the highest order 802.11 mode. When the maximum output power is the same for multiple test channels, either according to the default or additional power measurement requirements, SAR is measured using the channel closest to the middle of the frequency band or aggregated band. When there are multiple channels with the same maximum output power, SAR is measured using the higher number channel.

Initial Test Configuration Procedure

For OFDM, an initial test configuration is determined for each frequency band and aggregated band, according to the transmission mode with the highest maximum output power specified for SAR measurements. When the same maximum output power is specified for multiple OFDM transmission mode configurations in a frequency band or aggregated band, SAR is measured using the configuration(s) with the largest channel bandwidth, lowest order modulation, lowest data rate and lowest order IEEE 802.11 mode. The channel of the transmission mode with the highest average RF output conducted power will be the initial test configuration.

When the reported SAR is ≤ 0.8 W/kg, no additional measurements on other test channels are required. Otherwise, SAR is evaluated using the subsequent highest average RF output channel until the reported SAR result is ≤ 1.2 W/kg or all channels are measured. When there are multiple untested channels having the same subsequent highest average RF output power, the channel with higher frequency from the lowest 802.11 mode is considered for SAR measurements. When 10g SAR measurement is considered, a factor of 2.5 is applied to the thresholds above.

Subsequent Test Configuration Procedure

For OFDM configurations in each frequency band and aggregated band, SAR is evaluated for initial test configuration using the fixed test position or the initial test position procedure. When the highest reported SAR (for the initial test configuration), adjusted by the ratio of the specified maximum output power of the subsequent test configuration to initial test configuration, is ≤ 1.2 W/kg, no additional SAR tests for the subsequent test configurations are required. When 10g SAR measurement is considered, a factor of 2.5 is applied to the thresholds above.

MIMO SAR considerations

Per KDB Publication 248227 D01, the simultaneous SAR provisions in KDB Publication 447498 D01 should be applied to determine simultaneous transmission SAR test exclusion for Wi-Fi MIMO. If the sum of 1g single transmission chain SAR measurements is < 1.6 W/kg, no additional SAR measurements for MIMO are required. Alternatively, SAR for MIMO can be measured with all antennas transmitting simultaneously at the specified maximum output power of MIMO operation. When 10g SAR measurement is considered, a factor of 2.5 is applied to the thresholds above.

SAR Test Exclusion for IEEE 802.11ax

To make the most efficient use of the additional available subcarriers (data tones), IEEE 802.11ax can utilize Orthogonal Frequency-Division Multiple Access (OFDMA) which divides the existing 802.11 channels into smaller subchannels called Resource Units (RUs). Possible RU sizes are: 26T, 52T, 106T, 242T, 484T, 996T and 996Tx2.

Per FCC Guidance, 802.11ax was considered a higher order 802.11 mode when compared to a/b/g/n/ac to apply KDB Publication 248227 D01 for OFDM mode selection. Therefore, SAR tests were not required for 802.11ax based on the maximum allowed output powers of OFDM modes and the reported SAR values. Per FCC Guidance, maximum conducted powers were performed for each RU size to demonstrate that the output powers would not be higher than the other OFDM 802.11 modes.

When SAR testing for 802.11ax is required, the following procedures are applied to measure the SAR.

- If the maximum output power is highest for OFDMA scenarios, choose the tone size with the maximum number of tones and the highest maximum output power.
- Otherwise, consider the fully allocated channel for SAR testing.
- When SAR testing is required on RU sizes less than the fully allocated channel, use the RU number closest to the middle of the channel, choosing the higher RU number when two RUs are equidistant to the middle of the channel.

8. RF Output Power Specification and Measurement

8.1. Nominal and Maximum Output Power Specifications

WLAN 2.4 GHz MAX Tune-up Power					
Mode	Channel	Frequency	ANT 0	ANT 1	ANT 0+1
			MAX Tune-up (dBm)	MAX Tune-up (dBm)	MAX Tune-up (dBm)
802.11b	1	2412	15.50	15.50	18.50
	6	2437	15.50	15.50	18.50
	11	2462	15.50	15.50	18.50
	12	2467	15.00	15.00	18.00
	13	2472	13.50	13.50	16.50
802.11g	1	2412	15.50	15.50	18.50
	6	2437	15.50	15.50	18.50
	11	2462	15.50	15.50	18.50
	12	2467	14.50	14.50	17.50
	13	2472	11.50	11.50	14.50
802.11n HT20	1	2412	15.50	15.50	18.50
	6	2437	15.50	15.50	18.50
	11	2462	15.50	15.50	18.50
	12	2467	14.00	14.00	17.00
	13	2472	9.50	9.50	12.50
802.11n HT40	3	2422	15.00	15.00	18.00
	6	2437	15.50	15.50	18.50
	9	2452	15.00	15.00	18.00
	10	2457	12.00	12.00	15.00
	11	2462	10.00	10.00	13.00
802.11ax HE20	1	2412	15.50	15.50	18.50
	6	2437	15.50	15.50	18.50
	11	2462	15.50	15.50	18.50
	12	2467	14.00	14.00	17.00
	13	2472	10.00	10.00	13.00
802.11ax HE40	3	2422	15.00	15.00	18.00
	6	2437	15.50	15.50	18.50
	9	2452	15.00	15.00	18.00
	10	2457	12.50	12.50	15.50
	11	2462	10.00	10.00	13.00

WLAN 5.2 GHz MAX Tune-up Power					
Mode	Channel	Frequency	ANT 0	ANT 1	ANT 0+1
			MAX Tune-up (dBm)	MAX Tune-up (dBm)	MAX Tune-up (dBm)
802.11a	36	5180	16.00	16.00	19.00
	40	5200	16.00	16.00	19.00
	44	5220	16.00	16.00	19.00
	48	5240	16.00	16.00	19.00
802.11n HT20	36	5180	16.00	16.00	19.00
	40	5200	16.00	16.00	19.00
	44	5220	16.00	16.00	19.00
	48	5240	16.00	16.00	19.00
802.11n HT40	38	5190	16.00	16.00	19.00
	46	5230	16.00	16.00	19.00
802.11ac VHT20	36	5180	16.00	16.00	19.00
	40	5200	16.00	16.00	19.00
	44	5220	16.00	16.00	19.00
	48	5240	16.00	16.00	19.00
802.11ac VHT40	38	5190	16.00	16.00	19.00
	46	5230	16.00	16.00	19.00
802.11ac VHT80	42	5210	14.00	14.00	17.00
802.11ax HE20	36	5180	16.00	16.00	19.00
	40	5200	16.00	16.00	19.00
	44	5220	16.00	16.00	19.00
	48	5240	16.00	16.00	19.00
802.11ax HE40	38	5190	16.00	16.00	19.00
	46	5230	16.00	16.00	19.00
802.11ax HE80	42	5210	14.00	14.00	17.00

WLAN 5.3 GHz MAX Tune-up Power					
Mode	Channel	Frequency	ANT 0	ANT 1	ANT 0+1
			MAX Tune-up (dBm)	MAX Tune-up (dBm)	MAX Tune-up (dBm)
802.11a	52	5260	16.00	16.00	19.00
	56	5280	16.00	16.00	19.00
	60	5300	16.00	16.00	19.00
	64	5320	16.00	16.00	19.00
802.11n HT20	52	5260	16.00	16.00	19.00
	56	5280	16.00	16.00	19.00
	60	5300	16.00	16.00	19.00
	64	5320	16.00	16.00	19.00
802.11n HT40	54	5270	16.00	16.00	19.00
	62	5310	16.00	16.00	19.00
802.11ac VHT20	52	5260	16.00	16.00	19.00
	56	5280	16.00	16.00	19.00
	60	5300	16.00	16.00	19.00
	64	5320	16.00	16.00	19.00
802.11ac VHT40	54	5270	16.00	16.00	19.00
	62	5310	16.00	16.00	19.00
802.11ac VHT80	58	5290	14.50	14.50	17.50
802.11ac VHT160	50	5250	13.50	13.50	16.50
802.11ax HE20	52	5260	16.00	16.00	19.00
	56	5280	16.00	16.00	19.00
	60	5300	16.00	16.00	19.00
	64	5320	16.00	16.00	19.00
802.11ax HE40	54	5270	16.00	16.00	19.00
	62	5310	16.00	16.00	19.00
802.11ax HE80	58	5290	14.50	14.50	17.50
802.11ax HE160	50	5250	13.50	13.50	16.50

WLAN 5.6 GHz MAX Tune-up Power					
Mode	Channel	Frequency	ANT 0	ANT 1	ANT 0+1
			MAX Tune-up (dBm)	MAX Tune-up (dBm)	MAX Tune-up (dBm)
802.11a	100	5500	14.00	14.00	17.00
	116	5580	14.00	14.00	17.00
	124	5620	14.00	14.00	17.00
	132	5660	14.00	14.00	17.00
	140	5700	14.00	14.00	17.00
	144	5720	14.00	14.00	17.00
802.11n HT20	100	5500	14.00	14.00	17.00
	116	5580	14.00	14.00	17.00
	124	5620	14.00	14.00	17.00
	132	5660	14.00	14.00	17.00
	140	5700	14.00	14.00	17.00
	144	5720	14.00	14.00	17.00
802.11n HT40	102	5510	14.00	14.00	17.00
	110	5550	14.00	14.00	17.00
	126	5630	14.00	14.00	17.00
	134	5670	14.00	14.00	17.00
	142	5710	14.00	14.00	17.00
802.11ac VHT20	100	5500	14.00	14.00	17.00
	116	5580	14.00	14.00	17.00
	124	5620	14.00	14.00	17.00
	132	5660	14.00	14.00	17.00
	140	5700	14.00	14.00	17.00
	144	5720	14.00	14.00	17.00
802.11ac VHT40	102	5510	14.00	14.00	17.00
	110	5550	14.00	14.00	17.00
	126	5630	14.00	14.00	17.00
	134	5670	14.00	14.00	17.00
	142	5710	14.00	14.00	17.00
802.11ac VHT80	106	5530	14.00	14.00	17.00
	122	5610	14.00	14.00	17.00
	138	5690	14.00	14.00	17.00
802.11ac VHT160	114	5570	12.50	12.50	15.50
802.11ax HE20	100	5500	14.00	14.00	17.00
	116	5580	14.00	14.00	17.00
	124	5620	14.00	14.00	17.00
	132	5660	14.00	14.00	17.00
	140	5700	14.00	14.00	17.00
	144	5720	14.00	14.00	17.00
802.11ax HE40	102	5510	14.00	14.00	17.00
	110	5550	14.00	14.00	17.00
	126	5630	14.00	14.00	17.00
	134	5670	14.00	14.00	17.00
	142	5710	14.00	14.00	17.00
802.11ax HE80	106	5530	14.00	14.00	17.00
	122	5610	14.00	14.00	17.00
	138	5690	14.00	14.00	17.00
802.11ax HE160	114	5570	13.50	13.50	16.50

WLAN 5.8 GHz MAX Tune-up Power					
Mode	Channel	Frequency	ANT 0	ANT 1	ANT 0+1
			MAX Tune-up (dBm)	MAX Tune-up (dBm)	MAX Tune-up (dBm)
802.11a	149	5745	14.00	14.00	17.00
	157	5785	14.00	14.00	17.00
	165	5825	14.00	14.00	17.00
	169	5845	14.00	14.00	17.00
	173	5865	14.00	14.00	17.00
	177	5885	14.00	14.00	17.00
802.11n HT20	149	5745	14.00	14.00	17.00
	157	5785	14.00	14.00	17.00
	165	5825	14.00	14.00	17.00
	169	5845	14.00	14.00	17.00
	173	5865	14.00	14.00	17.00
	177	5885	14.00	14.00	17.00
802.11n HT40	151	5755	14.00	14.00	17.00
	159	5795	14.00	14.00	17.00
	167	5835	14.00	14.00	17.00
	175	5875	14.00	14.00	17.00
802.11ac VHT20	149	5745	14.00	14.00	17.00
	157	5785	14.00	14.00	17.00
	165	5825	14.00	14.00	17.00
	169	5845	14.00	14.00	17.00
	173	5865	14.00	14.00	17.00
	177	5885	14.00	14.00	17.00
802.11ac VHT40	151	5755	14.00	14.00	17.00
	159	5795	14.00	14.00	17.00
	167	5835	14.00	14.00	17.00
	175	5875	14.00	14.00	17.00
802.11ac VHT80	155	5775	14.00	14.00	17.00
	171	5855	14.00	14.00	17.00
802.11ac VHT160	163	5815	14.00	14.00	17.00
802.11ax HE20	149	5745	14.00	14.00	17.00
	157	5785	14.00	14.00	17.00
	165	5825	14.00	14.00	17.00
	169	5845	14.00	14.00	17.00
	173	5865	14.00	14.00	17.00
	177	5885	14.00	14.00	17.00
802.11ax HE40	151	5755	14.00	14.00	17.00
	159	5795	14.00	14.00	17.00
	167	5835	14.00	14.00	17.00
	175	5875	14.00	14.00	17.00
802.11ax HE80	155	5775	14.00	14.00	17.00
	171	5855	14.00	14.00	17.00
802.11ax HE160	163	5815	14.00	14.00	17.00

U-NII 5 MAX Tune-up Power_SP					
Mode	Channel	Frequency	ANT 0	ANT 1	ANT 0+1
			MAX Tune-up (dBm)	MAX Tune-up (dBm)	MAX Tune-up (dBm)
802.11a	1	5955	16.00	16.00	19.00
	45	6175	16.00	16.00	19.00
	93	6415	16.00	16.00	19.00
802.11ax HE20	1	5955	16.00	16.00	19.00
	45	6175	16.00	16.00	19.00
	93	6415	16.00	16.00	19.00
802.11ax HE40	3	5965	16.00	16.00	19.00
	43	6165	16.00	16.00	19.00
	91	6405	16.00	16.00	19.00
802.11ax HE80	7	5985	16.00	16.00	19.00
	39	6145	16.00	16.00	19.00
	87	6385	16.00	16.00	19.00
802.11ax HE160	15	6025	16.00	16.00	19.00
	47	6185	16.00	16.00	19.00
	79	6345	16.00	16.00	19.00

U-NII 5 MAX Tune-up Power_LPI					
Mode	Channel	Frequency	ANT 0	ANT 1	ANT 0+1
			MAX Tune-up (dBm)	MAX Tune-up (dBm)	MAX Tune-up (dBm)
802.11a	1	5955	7.00	7.00	4.00
	45	6175	7.00	7.00	4.00
	93	6415	7.00	7.00	4.00
802.11ax HE20	1	5955	1.00	1.00	4.00
	45	6175	1.00	1.00	4.00
	93	6415	1.00	1.00	4.00
802.11ax HE40	3	5965	3.50	3.50	6.50
	43	6165	3.50	3.50	6.50
	91	6405	3.50	3.50	6.50
802.11ax HE80	7	5985	7.00	7.00	10.00
	39	6145	7.00	7.00	10.00
	87	6385	7.00	7.00	10.00
802.11ax HE160	15	6025	12.50	12.50	12.50
	47	6185	12.50	12.50	12.50
	79	6345	12.50	12.50	12.50

U-NII 6 MAX Tune-up Power_LPI					
Mode	Channel	Frequency	ANT 0	ANT 1	ANT 0+1
			MAX Tune-up (dBm)	MAX Tune-up (dBm)	MAX Tune-up (dBm)
802.11a	97	6435	7.50	7.50	4.50
	105	6475	7.50	7.50	4.50
	113	6515	7.50	7.50	4.50
802.11ax HE20	97	6435	1.50	1.50	4.50
	105	6475	1.50	1.50	4.50
	113	6515	1.50	1.50	4.50
802.11ax HE40	99	6445	4.00	4.00	7.00
	107	6485	4.00	4.00	7.00
802.11ax HE80	103	6465	7.00	7.00	10.00
	119	6545	7.00	7.00	10.00
802.11ax HE160	111	6505	13.00	13.00	13.00

U-NII 7 MAX Tune-up Power_SP					
Mode	Channel	Frequency	ANT 0	ANT 1	ANT 0+1
			MAX Tune-up (dBm)	MAX Tune-up (dBm)	MAX Tune-up (dBm)
802.11a	117	6535	16.00	16.00	19.00
	149	6695	16.00	16.00	19.00
	181	6855	16.00	16.00	19.00
802.11ax HE20	117	6535	16.00	16.00	19.00
	149	6695	16.00	16.00	19.00
	181	6855	16.00	16.00	19.00
802.11ax HE40	115	6525	16.00	16.00	19.00
	147	6685	16.00	16.00	19.00
	179	6845	16.00	16.00	19.00
802.11ax HE80	135	6625	16.00	16.00	19.00
	151	6705	16.00	16.00	19.00
	167	6785	16.00	16.00	19.00
	183	6865	7.50	7.50	10.50
802.11ax HE160	143	6665	16.00	16.00	19.00
	175	6825	12.50	12.50	12.50

U-NII 7 MAX Tune-up Power_LPI					
Mode	Channel	Frequency	ANT 0	ANT 1	ANT 0+1
			MAX Tune-up (dBm)	MAX Tune-up (dBm)	MAX Tune-up (dBm)
802.11a	117	6535	7.00	7.00	4.00
	149	6695	7.00	7.00	4.00
	181	6855	7.00	7.00	4.00
802.11ax HE20	117	6535	1.50	1.50	4.50
	149	6695	1.50	1.50	4.50
	181	6855	1.50	1.50	4.50
802.11ax HE40	115	6525	4.00	4.00	7.00
	147	6685	4.00	4.00	7.00
	179	6845	4.00	4.00	7.00
802.11ax HE80	135	6625	7.00	7.00	10.00
	151	6705	7.00	7.00	10.00
	167	6785	7.00	7.00	10.00
	183	6865	7.00	7.00	10.00
802.11ax HE160	143	6665	12.50	12.50	12.50
	175	6825	12.50	12.50	12.50

U-NII 8 MAX Tune-up Power_LPI					
Mode	Channel	Frequency	ANT 0	ANT 1	ANT 0+1
			MAX Tune-up (dBm)	MAX Tune-up (dBm)	MAX Tune-up (dBm)
802.11a	185	6875	7.50	7.50	4.50
	209	6995	7.50	7.50	4.50
	233	7115	7.50	7.50	4.50
802.11ax HE20	185	6875	2.00	2.00	5.00
	209	6995	2.00	2.00	5.00
	233	7115	2.00	2.00	5.00
802.11ax HE40	187	6885	4.50	4.50	7.50
	211	7005	4.50	4.50	7.50
	227	7085	4.50	4.50	7.50
802.11ax HE80	199	6945	7.50	7.50	10.50
	215	7025	7.50	7.50	10.50
802.11ax HE160	207	6985	13.00	13.00	13.00

Bluetooth MAX Tune-up Power					
Mode	Channel	Frequency	ANT 0	ANT 1	ANT 0+1
			MAX Tune-up (dBm)	MAX Tune-up (dBm)	MAX Tune-up (dBm)
BR / EDR 1Mbps (GFSK)	0	2402	---	11.50	---
	39	2441	---	11.50	---
	78	2480	---	11.50	---
BR / EDR 2Mbps (π/4 DQPSK)	0	2402	---	8.50	---
	39	2441	---	8.50	---
	78	2480	---	8.50	---
BR / EDR 3Mbps (8-DPSK)	0	2402	---	8.50	---
	39	2441	---	8.50	---
	78	2480	---	8.50	---
LE 1Mbps (GFSK)	0	2402	---	11.50	---
	19	2440	---	11.50	---
	39	2480	---	11.50	---
LE 2Mbps (π/4 DQPSK)	0	2402	---	11.50	---
	19	2440	---	11.50	---
	39	2480	---	11.50	---

8.2. Measured Conducted Power Results for WLAN

Test Notes:

[1] The maximum output power specified for production units are determined for all applicable 802.11 transmission modes in each standalone and aggregated frequency band. Maximum output power was measured for the highest maximum output power configurations in each frequency band according to the default power measurement procedures.

[2] Per KDB Publication 248227 D01, the conducted power measurement was performed for the transmission mode configuration with the highest maximum output power specified for production units.

[3] For transmission modes with the same maximum output power specification, powers were measured for the largest channel bandwidth, lowest order modulation and lowest data rate.

[4] For transmission modes with identical maximum specified output power, channel bandwidth, modulation and data rates, power measurements were required for all identical configurations.

[5] For each transmission mode configuration, powers were measured for the highest and lowest channels; and at the mid-band channel(s) when there were at least 3 channels supported. For configurations with multiple mid-band channels, due to an even number of channels, both channels were measured.

[6] Per April 2019 TCB Workshop guidance, general principles of KDB Publication 248227 D01 can be applied to determine the SAR Initial Test Configurations and test reduction for 802.11ax, and 802.11ax is considered as the highest order modulation mode. For the table below the 802.11ax maximum power is SU (non-OFDMA), and the SU maximum power is higher than RU (OFDMA).

WLAN 2.4 GHz						
Mode	Channel	Frequency (MHz)	ANT 0		ANT 1	
			Average power (dBm)	Tune-Up Limit (dBm)	Average power (dBm)	Tune-Up Limit (dBm)
802.11b	1	2412	15.46	15.50	15.24	15.50
	6	2437	15.37	15.50	15.11	15.50
	11	2462	15.14	15.50	15.05	15.50
	12	2467	14.76	15.00	14.70	15.00
	13	2472	13.33	13.50	13.31	13.50

WLAN 5.3 GHz						
Mode	Channel	Frequency (MHz)	ANT 0		ANT 1	
			Average power (dBm)	Tune-Up Limit (dBm)	Average power (dBm)	Tune-Up Limit (dBm)
802.11n HT40	54	5270	15.55	16.00	15.76	16.00
	62	5310	15.98	16.00	15.96	16.00

WLAN 5.6 GHz						
Mode	Channel	Frequency (MHz)	ANT 0		ANT 1	
			Average power (dBm)	Tune-Up Limit (dBm)	Average power (dBm)	Tune-Up Limit (dBm)
802.11ac VHT80	106	5530	13.94	14.00	13.76	14.00
	122	5610	13.75	14.00	13.70	14.00
	138	5690	13.80	14.00	13.63	14.00

WLAN 5.8 GHz						
Mode	Channel	Frequency (MHz)	ANT 0		ANT 1	
			Average power (dBm)	Tune-Up Limit (dBm)	Average power (dBm)	Tune-Up Limit (dBm)
802.11ac VHT160	163	5815	13.81	14.00	13.84	14.00

U-NII 5_SP						
Mode	Channel	Frequency (MHz)	ANT 0		ANT 1	
			Average power (dBm)	Tune-Up Limit (dBm)	Average power (dBm)	Tune-Up Limit (dBm)
802.11ax HE160	15	6025	15.70	16.00	15.89	16.00
	47	6185	15.93	16.00	15.91	16.00
	79	6345	15.60	16.00	15.55	16.00

U-NII 6_LPI						
Mode	Channel	Frequency (MHz)	ANT 0		ANT 1	
			Average power (dBm)	Tune-Up Limit (dBm)	Average power (dBm)	Tune-Up Limit (dBm)
802.11ax HE160	111	6505	12.63	13.00	12.59	13.00

U-NII 7_SP						
Mode	Channel	Frequency (MHz)	ANT 0		ANT 1	
			Average power (dBm)	Tune-Up Limit (dBm)	Average power (dBm)	Tune-Up Limit (dBm)
802.11ax HE160	143	6665	15.90	16.00	15.58	16.00
	175	6825	12.45	12.50	12.40	12.50

U-NII 8_LPI						
Mode	Channel	Frequency (MHz)	ANT 0		ANT 1	
			Average power (dBm)	Tune-Up Limit (dBm)	Average power (dBm)	Tune-Up Limit (dBm)
802.11ax HE160	207	6985	12.81	13.00	12.93	13.00

9. Evaluation for Standalone Transmission Scenario

9.1. Test Notes

General Notes:

[1] Per KDB 447498 D01, SAR results were scaled to the maximum allowed power to demonstrate compliance. When SAR is not measured at the maximum power level allowed for production units, the measured SAR will be scaled to the maximum tune-up tolerance limit to determine compliance.

[2] The SAR has been measured with highest transmission duty factor supported by the test mode tools for WLAN and/or Bluetooth. When the transmission duty factor could not achieve 100%, the reported SAR will be scaled to 100% transmission duty factor to determine compliance at the maximum tune-up power.

[3] The reported SAR was calculated as below:

- Tune-up Scaling Factor = Maximum Tune-up Limit Power (mW) / Measured Conducted Power (mW)
- Duty Factor Scaling Factor = 100% / Transmission Duty Cycle (%)
- WWAN Reported SAR = Measured SAR x Tune-up Scaling Factor
- WLAN / Bluetooth Reported SAR = Measured SAR x Tune-up Scaling Factor x Duty Cycle Scaling Factor

[4] Testing of other required channels within the operating mode of a frequency band is not required when the reported SAR for the mid-band or highest output power channel is:

- 1g SAR ≤ 0.8 W/kg or 10g SAR ≤ 2.0 W/kg, when the transmission band is ≤ 100 MHz
- 1g SAR ≤ 0.6 W/kg or 10g SAR ≤ 1.5 W/kg, when the transmission band is between 100 MHz and 200 MHz
- 1g SAR ≤ 0.4 W/kg or 10g SAR ≤ 1.0 W/kg, when the transmission band is ≥ 200 MHz

[5] Per KDB Publication 648474 D04, body-worn SAR was evaluated without a headset connected to the device. Since the standalone reported body-worn SAR was ≤ 1.2 W/kg, no additional body-worn SAR evaluation with a headset was required.

[6] Per KDB 865664 D01, variability SAR tests were performed when the measured SAR results for a frequency band were ≥ 0.8 W/kg.

[7] During SAR testing for the wireless router conditions per KDB Publication 941225 D06, the actual portable Hotspot operation (with actual simultaneous transmission of a transmitter with Wi-Fi) was not activated.

[8] Per KDB Publication 648474 D04, this device is considered as "Phablet" since its overall diagonal dimension is > 16 cm. Therefore, Phablet SAR tests are required when wireless router mode does not apply or if wireless router 1g SAR > 1.2 W/kg.

[9] Unless otherwise noted, when 10g SAR measurement is considered, a factor of 2.5 is applied to the 1g thresholds for the equivalent test cases.

WLAN Notes:

[1] Per KDB Publication 248227 D01, for held-to-ear, hotspot, and phablet (mini-tablet) operations, the initial test position procedures were applied. The test position with the highest extrapolated peak SAR will be used as the initial test position. When reported 1g SAR for the initial test position is ≤ 0.4 W/kg, no additional testing for the remaining test positions was required. Otherwise, SAR is evaluated at the subsequent highest peak SAR positions until the reported SAR result is ≤ 0.8 W/kg or all test positions are measured.

[2] For 2.4 GHz Wi-Fi single transmission chain operations, the highest measured maximum output power channel of 802.11b for DSSS was selected for SAR measurement. SAR for OFDM modes (802.11g/n/ax) was not required due to the highest reported SAR for DSSS adjusted by the ratio of OFDM to DSSS specified maximum output power is ≤ 1.2 W/kg.

[3] For 5 GHz Wi-Fi operations, the initial test configuration was selected according to the transmission mode with the highest maximum allowed powers. Other transmission modes were not investigated since the highest reported 1g SAR for initial test configuration adjusted by the ratio of subsequent test configuration to initial test configuration specified maximum output power is 1.2 W/kg.

[4] SAR testing for U-NII-1 is not required due to the highest reported SAR for U-NII-2A is ≤ 1.2 W/kg.

[5] When the maximum reported 1g averaged SAR is ≤ 0.8 W/kg, SAR testing on additional channels was not required. Otherwise, SAR for the next highest output power channel was required until the reported SAR result was ≤ 1.20 W/kg for 1g evaluations or all test channels were measured.

[6] SAR for MIMO mode was evaluated by following the simultaneous SAR provisions from KDB Publication 447498 D01 by either evaluating the sum of the 1g SAR values of each antenna transmitting independently or making a SAR measurement with both antennas transmitting simultaneously.

[7] For scaling factor determination of the reported SAR of MIMO mode, if the hot spots are separated the scaling factors are individually determined from each transmit chain. If the hot spots are not spatially separated, the scaling factor is determined from the worst number of each transmit chain.

[8] The device was configured to transmit continuously at the required data rate, channel bandwidth and signal modulation, using the highest transmission duty factor supported by the test mode tools. The reported SAR was scaled to the 100 % transmission duty factor to determine compliance.

[9] When 10g SAR measurement is considered, a factor of 2.5 is applied to the thresholds above.

Wi-Fi 6E PD Notes:

[1] The Wi-Fi 6E PD was performed according 2020 TCB workshop RF Exposure 5G RFX Policies Interim Procedures.

[2] First, evaluate SAR using 6-7 GHz parameters per IEC/IEEE 62209-1528:2020 and using highest SAR test configurations evaluate incident PD using the mmW near-field probe and total-field / power-density reconstruction method (2 mm closest meas. plane).

[3] Per Interim Procedures, the power density results were scaled according to IEC 62479:2010 for the portion of the measurement uncertainty > 30 %. Total expanded uncertainty of 1.52 dB (41.9%) was used to determine the psPD measurement scaling factor.

[4] The manufacturer has confirmed that the devices tested have the same physical, mechanical and thermal characteristics and are within operational tolerances expected for production units.

[5] The Wi-Fi 6E RF Exposure results are used for simultaneous transmission analysis with the other transmitters and total exposure ratio, the analysis can be found in this report and PD report.

[6] The absorbed power density (APD) using a 4 cm^2 averaging area is reported based on SAR measurements.

[7] Power density was calculated by repeated E-field measurements on two measurement planes separated by λ/4.

[8] The device was configured to transmit continuously at the required data rate, channel bandwidth and signal modulation, using the highest transmission duty factor supported by the test mode tools.

[9] iPD testing was performed on highest SAR configuration determined by SAR test results for all of the 6E spectrum. No channels that could transmit below 6 GHz were selected for testing so as to use the ESR Test Methodology only.

9.2. Measured and Reported SAR and APD Results for Body

Index.	Band	Modulation	Test Position	Spacing (mm)	Channel	Antenna	Sample	Power Drift	Meas. Conducted Power (dBm)	Tune-up (dBm)	Tune-up Scaling Factor	Duty Cycle (%)	Duty Cycle Scaling Factor	SAR_{1g} (W/kg)	Reported SAR_{1g} (W/kg)
63	WLAN2.4G	802.11b	Front Edge of laptop	5	1	ANT 0	1	-0.13	15.46	15.5	1.009	99.65	1.004	0.195	0.20
	WLAN2.4G	802.11b	Front Edge of laptop	5	1	ANT 1	1	0.04	15.24	15.5	1.062	99.63	1.004	0.181	0.19
	WLAN2.4G	802.11b	Front Edge of laptop	5	1	ANT 0	2	0.18	15.46	15.5	1.009	99.65	1.004	0.189	0.19
69	WLAN5.3G	802.11n HT40	Front Edge of laptop	5	62	ANT 0	1	-0.07	15.98	16	1.005	93.98	1.064	0.755	0.81
	WLAN5.3G	802.11n HT40	Front Edge of laptop	5	62	ANT 1	1	0.15	15.96	16	1.009	93.64	1.068	0.425	0.46
	WLAN5.3G	802.11n HT40	Front Edge of laptop	5	62	ANT 0	2	0.05	15.98	16	1.005	93.98	1.064	0.709	0.76
75	WLAN5.6G	802.11ac VHT80	Front Edge of laptop	5	106	ANT 0	1	-0.16	13.94	14	1.014	93.48	1.070	0.408	0.44
	WLAN5.6G	802.11ac VHT80	Front Edge of laptop	5	106	ANT 1	1	0.01	13.76	14	1.057	93.56	1.069	0.179	0.20
	WLAN5.6G	802.11ac VHT80	Front Edge of laptop	5	106	ANT 0	2	0.17	13.94	14	1.014	93.48	1.070	0.386	0.42
81	WLAN5.8G	802.11ac VHT160	Front Edge of laptop	5	163	ANT 0	1	-0.02	13.81	14	1.045	96.47	1.037	0.391	0.42
	WLAN5.8G	802.11ac VHT160	Front Edge of laptop	5	163	ANT 1	1	-0.12	13.84	14	1.038	96.34	1.038	0.272	0.29
	WLAN5.8G	802.11ac VHT160	Front Edge of laptop	5	163	ANT 0	2	-0.06	13.81	14	1.045	96.47	1.037	0.352	0.38

Index.	Band	Modulation	Test Position	Spacing (mm)	Channel	Antenna	Sample	Power Drift	Meas. Conducted Power (dBm)	Tune-up (dBm)	Tune-up Scaling Factor	Duty Cycle (%)	Duty Cycle Scaling Factor	SAR_{1g} (W/kg)	Reported SAR_{1g} (W/kg)	APD W/m^2 ($4cm^2$)	Reported APD W/m^2 ($4cm^2$)
87	U-NII 5	802.11ax HE160	Front Edge of laptop	5	47	ANT 0	1	-0.03	15.93	16	1.016	95.23	1.050	0.819	0.87	5.38	5.74
	U-NII 5	802.11ax HE160	Front Edge of laptop	5	47	ANT 1	1	0.06	15.91	16	1.021	95.33	1.049	0.395	0.42	2.62	2.81
	U-NII 5	802.11ax HE160	Front Edge of laptop	5	47	ANT 0	2	0.12	15.93	16	1.016	95.23	1.050	0.753	0.80	4.94	5.27
93	U-NII 6	802.11ax HE160	Front Edge of laptop	5	111	ANT 0	1	-0.08	12.63	13	1.089	95.23	1.050	0.394	0.45	2.53	2.89
	U-NII 6	802.11ax HE160	Front Edge of laptop	5	111	ANT 1	1	0.04	12.59	13	1.099	95.33	1.049	0.105	0.12	0.676	0.78
	U-NII 6	802.11ax HE160	Front Edge of laptop	5	111	ANT 0	2	-0.05	12.63	13	1.089	95.23	1.050	0.352	0.40	2.26	2.58
99	U-NII 7	802.11ax HE160	Front Edge of laptop	5	143	ANT 0	1	-0.03	15.9	16	1.023	95.23	1.050	0.593	0.64	4.02	4.32
	U-NII 7	802.11ax HE160	Front Edge of laptop	5	143	ANT 1	1	0.09	15.58	16	1.102	95.33	1.049	0.312	0.36	2.03	2.35
	U-NII 7	802.11ax HE160	Front Edge of laptop	5	143	ANT 0	2	0.12	15.9	16	1.023	95.23	1.050	0.562	0.60	3.81	4.09
105	U-NII 8	802.11ax HE160	Front Edge of laptop	5	207	ANT 0	1	-0.02	12.81	13	1.045	95.23	1.050	0.764	0.84	4.67	5.12
	U-NII 8	802.11ax HE160	Front Edge of laptop	5	207	ANT 1	1	-0.12	12.93	13	1.016	95.33	1.049	0.277	0.30	1.69	1.80
	U-NII 8	802.11ax HE160	Front Edge of laptop	5	207	ANT 0	2	0.09	12.81	13	1.045	95.23	1.050	0.72	0.79	4.38	4.80

9.3. Measured and Reported IPD Results

Index.	Band	Modulation	Test Position	Spacing (mm)	Channel	Antenna	Sample	Power Drift	Meas. Conducted Power (dBm)	Tune-up (dBm)	Tune-up Scaling Factor	Duty Cycle (%)	Duty Cycle Scaling Factor	Scaling Factor for Measurement Uncertainty	sPDn 4 cm² (W/m²)	Scaling sPDn 4 cm² (W/m²)	sPDtot 4 cm² (W/m²)	Scaling sPDtot 4 cm² (W/m²)
200	U-NII 5	802.11ax HE160	Front Edge of laptop	5	47	ANT 0	1	0.11	15.93	16	1.016	95.23	1.050	1.119	4.05	4.84	4.47	5.34

9.4. SAR Measurement Variability

Per KDB Publication 865664 D01, SAR measurement variability was assessed for each frequency band, which was determined by the SAR probe calibration point and tissue-equivalent medium used for the device measurements. These additional measurements were repeated after the completion of all measurements requiring the same head tissue-equivalent medium in a frequency band. The test device was returned to ambient conditions (normal room temperature) with the battery fully charged before it was re-mounted on the device holder for the repeated measurement(s) to minimize any unexpected variations in the repeated results.

SAR Measurement Variability was assessed using the following procedures for each frequency band:

[1] The repeated measurement is not required, when the highest measured SAR is < 0.80 W/kg.

[2] The measurement was repeated once, when the highest measured SAR is ≥ 0.80 W/kg.

[3] A second repeated measurement was performed, if the ratio of largest to smallest SAR for the original and first repeated measurements was > 1.20, or when the original or repeated measurement was ≥ 1.45 W/kg.

[4] A third repeated measurement was performed, if the ratio of largest to smallest SAR for the original, first and second repeated measurements is > 1.20, and the original, first or second repeated measurement is ≥ 1.5 W/kg.

[5] When 10g SAR measurement is considered, a factor of 2.5 is applied to the thresholds above.

Since all the measured SAR are less than 0.8 W/kg, the repeated measurement is not required.

10. Test Equipment

Manufacturer	Name of Equipment	Type/Model	Serial Number	Calibration	
				Cal. Date	Cal.Period
SPEAG	2450 MHz System Validation Kit	D2450V2	712	May. 19, 2025	1 year
SPEAG	5 GHz System Validation Kit	D5GHzV2	1021	May. 22, 2025	1 year
SPEAG	6.5 GHz System Validation Kit	D6.5GHzV2	1016	May. 22, 2025	1 year
SPEAG	5G Verification Source	H10GVx	1060	Sep. 09, 2025	1 year
SPEAG	Dosimetric E-Field Probe	EUmmWV3	9403	Nov. 19, 2025	1 year
SPEAG	Dosimetric E-Field Probe	EX3DV4	7647	Apr. 24, 2025	1 year
SPEAG	Data Acquisition Electronics	DAE4	1253	Apr. 22, 2025	1 year
SPEAG	DASY 5 Measurement System	Software Version	v52.10.4	NCR	
SPEAG	SEMCAD X	Software Version	v14.6.14 (7501)	NCR	
SPEAG	cDASY 6 SAR Measurement System	Software Version	v16.4.0.5005	NCR	
SPEAG	cDASY 6 IPD Measurement System	Software Version	v3.2.2.2358	NCR	
R&S	Spectrum Analyzer	FSV3013	101701	Oct. 16, 2025	1 year
SPEAG	Dielectric Probe Kit	DAKS_VNA R140	0010318	May. 19, 2025	1 year
SPEAG	Dielectric Probe Kit	DAKS-3.5	1101	May. 19, 2025	1 year
SPEAG	POWERSOURCE1	SE UMS 160 CA	4244	May. 15, 2025	1 year
HILA	Digital Thermometer	TM-905A	2202675	Sep. 18, 2025	1 year
Agilent	Power Sensor	8481H	3318A20779	Jun. 12, 2025	1 year
Agilent	Power Meter	E4418B	GB40206143	Jun. 12, 2025	1 year
R&S	Signal Generator	SMB100A03	183594	Nov. 20, 2025	1 year
Testo	Thermometer	608-H1	83288313	May. 29, 2025	1 year
Mini-Circuits	Dual Directional Coupler	ZCDC20-5R263-S+	E69806	NCR	
EMCI	Power Amplifier	EMC0618-P	980833	NCR	
Woken	RF Cable	SS402	-	NCR	
Attenuator	INMET	18AH-03	S180301	NCR	

Note: CBT (Calibrated Before Testing). Prior to testing, the measurement paths containing a cable, attenuator, coupler, or filter were connected to a calibrated source to determine the losses of the measurement path. The power meter offset was then adjusted to compensate for the measurement system losses. This level offset is stored within the power meter before measurements are made. This calibration verification procedure applies to output power measurements. The calibrated reading is then taken directly from the power meter after compensation of the losses for all final power measurements.

Test Engineer：Gary Chao, Jason Tsao

11. Measurement Uncertainty

Per KDB Publication 865664 D01, SAR measurement uncertainty analysis is required when the highest measured 1g SAR is ≥ 1.5 W/kg and the highest measured 10g SAR is ≥ 3.75 W/kg. The expanded SAR measurement uncertainty must be ≤ 30 %, for a confidence interval of k = 2. Since the highest measured SAR was < 1.5 W/kg for 1g and < 3.75 W/kg for 10g for all frequency bands, the measurement uncertainty analysis described in IEEE Std 1528-2013 is not required in SAR reports submitted for equipment approval.

********** End of Report **********