RT-AC2600

Wireless-AC2600 Dual Band Gigabit Router

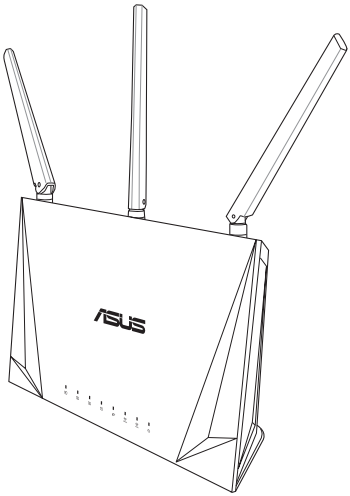

Quick Start Guide

E14742 / First Edition / August 2018

English

Package contents

- ☑ RT-AC2600 Wireless Router
- ☑ Network cable (RJ-45)
- ☑ AC adapter
- ☑ Quick Start Guide

A quick look at RT-AC2600

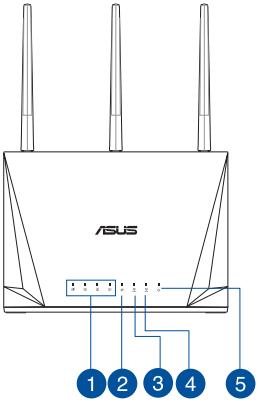

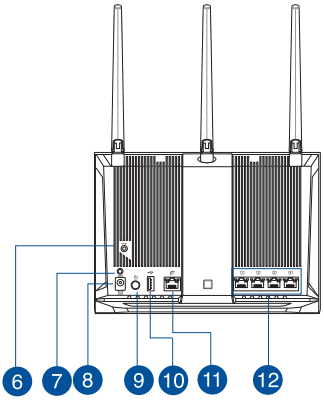

1	LAN 1~4 LEDs	7	WPS button
2	WAN LED	8	Power (DC-IN) port
3	2.4GHz LED	9	Power button
4	5GHz LED	10	USB3.0 port
5	Power LED	11	WAN (Internet) port
6	Reset button	12	LAN 1 ~ 4 ports

E14742_RT-AC2600_QSG.indd 2 2018/9/27 14:49:22

NOTES:

- Use only the adapter that came with your package. Using other adapters may damage the device.
- **Specifications:**

DC Power adapter	DC Output: +12V with 2.5A current		
Operating Temperature	0~40ºC	Storage	0~70ºC
Operating Humidity	50~90%	Storage	20~90%

English

Position your wireless router

For optimal wireless transmission between the wireless router and connected wireless devices, ensure that you:

- Place the wireless router in a centralized area for a maximum wireless coverage for the network devices.
- Keep the wireless router away from metal obstructions and away from direct sunlight.
- Keep the wireless router away from 802.11g or 20MHz only Wi-Fi devices, 2.4GHz computer peripherals, Bluetooth devices, cordless phones, transformers, heavy-duty motors, fluorescent lights, microwave ovens, refrigerators, and other industrial equipment to prevent signal interference or loss.
- Always update to the latest firmware. Visit the ASUS website at **http://www.asus.com** to get the latest firmware updates.
- To ensure the best wireless signal, orient the four detachable antennas as shown in the drawing below.

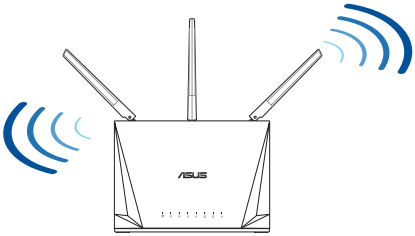

E14742_RT-AC2600_QSG.indd 3 2018/9/27 14:49:23

English

Preparing your modem

1. **Unplug the power cable/DSL modem. If it has a battery backup, remove the battery.**

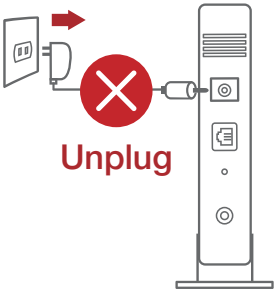

NOTE: If you are using DSL for Internet, you will need your username/password from your Internet Service Provider (ISP) to properly configure the router.

2. **Connect your modem to the router with the bundled network cable.**

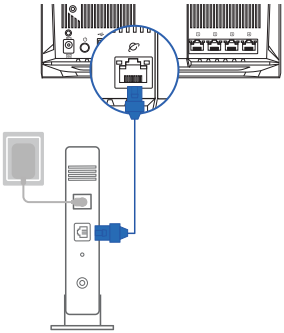

3. **Power on your cable/DSL modem.**
4. **Check your cable/DSL modem LED lights to ensure the connection is active.**

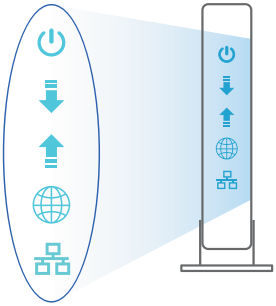

E14742_RT-AC2600_QSG.indd 4 2018/9/27 14:49:23

English

Setting up your Router

You can set up your Router via wired or wireless connection.

A. Wired connection

1. Plug your router into a power outlet and power it on. Connect the network cable from your computer to a LAN port on your router.

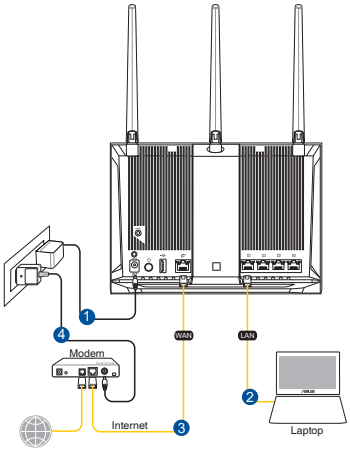

2. The web GUI launches automatically when you open a web browser. If it does not auto-launch, enter http://router.asus.com.
3. Set up a password for your router to prevent unauthorized access.

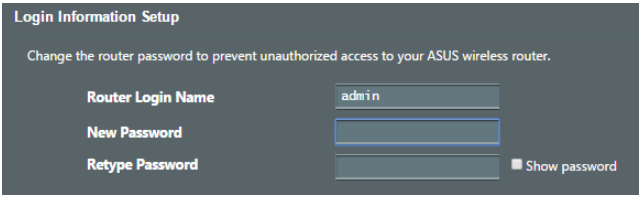

E14742_RT-AC2600_QSG.indd 5 2018/9/27 14:49:23

English

B. Wireless connection

1. Plug your router into a power outlet and power it on.

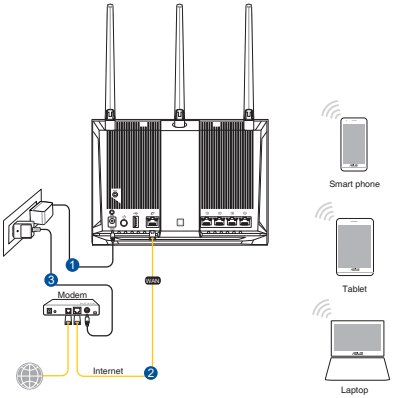

2. Connect to the network with SSID shown on the product label on the back side of the router. For better network security, change to a unique SSID and assign a password.

2.4G Wi-Fi Name (SSID):	ASUS_XX_2G
5G Wi-Fi Name (SSID):	ASUS_XX_5G

* **XX** refers to the last two digits of 2.4GHz MAC address. You can find it on the label on the back of your RT-AC2600.

E14742_RT-AC2600_QSG.indd 6 2018/9/27 14:49:23

English

3. **You can choose either the web GUI or ASUS Router app to set up your router.**

   a. **Web GUI Setup**

   - **Once connected, the web GUI launches automatically when you open a web browser. If it does not auto-launch, enter http://router.asus.com.**
   - **Set up a password for your router to prevent unauthorized access.**

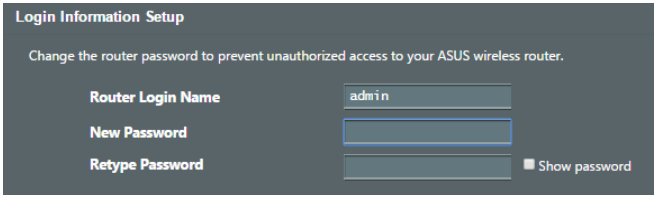

   b. **App Setup**

Download ASUS Router App to set up your router via your mobile devices.

- **Turn on Wi-Fi on your mobile devices and connect to your router's network.**
- **Follow ASUS Router App setup instructions to complete the setup.**

ASUS Router

GET IT ON Google Play

Download on the App Store

ASUS Router

E14742_RT-AC2600_QSG.indd 7 2018/9/27 14:49:23

English

Remembering your wireless router settings

- **Remember your wireless settings as you complete the router setup.**

Router Name:	Password:
2.4 GHz network SSID:	Password:
5GHz network SSID:	Password:

FAQ

1. Where can I find more information about the wireless router?
   - Online FAQ site: https://www.asus.com/support/faq
   - Technical support site: https://www.asus.com/support
   - Customer hotline: refer to the Support Hotline section in this Quick Start Guide
   - You can get the user manual online at https://www.asus.com/support

E14742_RT-AC2600_QSG.indd 8 2018/9/27 14:49:23

ASUS Recycling/Takeback Services

ASUS recycling and takeback programs come from our commitment to the highest standards for protecting our environment. We believe in providing solutions for you to be able to responsibly recycle our products, batteries, other components, as well as the packaging materials. Please go to http://csr.asus.com/english/Takeback.htm for the detailed recycling information in different regions.

REACH

Complying with the REACH (Registration, Evaluation, Authorisation, and Restriction of Chemicals) regulatory framework, we published the chemical substances in our products at ASUS REACH website at http://csr.asus.com/english/REACH.htm

Federal Communications Commission Statement

This device complies with Part 15 of the FCC Rules. Operation is subject to the following two conditions:

- This device may not cause harmful interference.
- This device must accept any interference received, including interference that may cause undesired operation.

This equipment has been tested and found to comply with the limits for a class B digital device, pursuant to part 15 of the FCC Rules. These limits are designed to provide reasonable protection against harmful interference in a residential installation.
This equipment generates, uses and can radiate radio frequency energy and, if not installed and used in accordance with the instructions, may cause harmful interference to radio communications. However, there is no guarantee that interference will not occur in a particular installation. If this equipment does cause harmful interference to radio or television reception, which can be determined by turning the equipment off and on, the user is encouraged to try to correct the interference by one or more of the following measures:

E14742_RT-AC2600_QSG.indd 9 2018/9/27 14:49:23

- Reorient or relocate the receiving antenna.
- Increase the separation between the equipment and receiver.
- Connect the equipment into an outlet on a circuit different from that to which the receiver is connected.
- Consult the dealer or an experienced radio/TV technician for help.

WARNING! Any changes or modifications not expressly approved by the party responsible for compliance could void the user's authority to operate the equipment.

Prohibition of Co-location

This device and its antenna(s) must not be co-located or operating in conjunction with any other antenna or transmitter.

IMPORTANT NOTE:

Radiation Exposure Statement: This equipment complies with FCC radiation exposure limits set forth for an uncontrolled environment. End users must follow the specific operating instructions for satisfying RF exposure compliance. To maintain compliance with FCC exposure compliance requirement, please follow operation instruction as documented in this manual.

WARNING! This equipment must be installed and operated in accordance with provided instructions and the antenna(s) used for this transmitter must be installed to provide a separation distance of at least 20 cm from all persons and must not be co-located or operating in conjunction with any other antenna or transmitter.

Compliance Statement of Innovation, Science and Economic Development Canada (ISED)

This device complies with Innovation, Science and Economic Development Canada licence exempt RSS standard(s). Operation is subject to the following two conditions: (1) this device may not cause interference, and (2) this device must accept any interference, including interference that may cause undesired operation of the device.

E14742_RT-AC2600_QSG.indd 10 2018/9/27 14:49:24

Operation in the band 5150–5250 MHz is only for indoor use to reduce the potential for harmful interference to co-channel mobile satellite systems.

CAN ICES-3(B)/NMB-3(B)

Radio Frequency (RF) Exposure Information

The radiated output power of the ASUS Wireless Device is below the Innovation, Science and Economic Development Canada radio frequency exposure limits. The ASUS Wireless Device should be used in such a manner such that the potential for human contact during normal operation is minimized.

This equipment should be installed and operated with a minimum distance of 20 cm between the radiator any part of your body.

This device has been certified for use in Canada. Status of the listing in the Innovation, Science and Economic Development Canada's REL (Radio Equipment List) can be found at the following web address:

http://www.ic.gc.ca/eic/site/ceb-bhst.nsf/eng/h_tt00020.html

Additional Canadian information on RF exposure also can be found at the following web:

https://www.ic.gc.ca/eic/site/smt-gst.nsf/eng/sf08792.html

Déclaration de conformité de Innovation, Sciences et Développement économique Canada (ISED)

Le présent appareil est conforme aux CNR d'Innovation, Sciences et Développement économique Canada applicables aux appareils radio exempts de licence. L'exploitation est autorisée aux deux conditions suivantes : (1) l'appareil ne doit pas produire de brouillage, et (2) l'utilisateur de l'appareil doit accepter tout brouillage radioélectrique subi, même si le brouillage est susceptible d'en compromettre le fonctionnement.

La bande 5150 – 5250 MHz est réservée uniquement pour une utilisation à l'intérieur afin de réduire les risques de brouillage préjudiciable aux systèmes de satellites mobiles utilisant les mêmes canaux.

CAN ICES-3(B)/NMB-3(B)

E14742_RT-AC2600_QSG.indd 11 2018/9/27 14:49:24

Informations concernant l'exposition aux fréquences radio (RF)

La puissance de sortie émise par cet appareil sans fil est inférieure à la limite d'exposition aux fréquences radio d'Innovation, Sciences et Développement économique du Canada (ISED). Utilisez l'appareil sans fil de façon à minimiser les contacts humains lors d'un fonctionnement normal.

Cet équipement doit être installé et utilisé avec un minimum de 20 cm de distance entre la source de rayonnement et votre corps.

L'utilisation de cet appareil est autorisée au Canada. Pour consulter l'entrée correspondant à l'appareil dans la liste d'équipement radio (REL - Radio Equipment List) d'Innovation, Sciences et Développement économique du Canada, rendez-vous sur :

http://www.ic.gc.ca/eic/site/ceb-bhst.nsf/eng/h_tt00020.html

Pour des informations supplémentaires concernant l'exposition aux fréquences radio au Canada, rendez-vous sur : https://www.ic.gc.ca/eic/site/smt-gst.nsf/eng/sf08792.html

E14742_RT-AC2600_QSG.indd 12 2018/9/27 14:49:24

Networks Global Hotline Information

Region	Country/ Area	Hotline Number	Service Hours
Europe	Cyprus	800-92491	09:00-13:00 ; 14:00-18:00 Mon-Fri
	France	0033-170949400	09:00-18:00 Mon-Fri
	Germany	0049-1805010920 0049-1805010923 (component support) 0049-2102959911 (Fax)	09:00-18:00 Mon-Fri 10:00-17:00 Mon-Fri
	Hungary	0036-15054561	09:00-17:30 Mon-Fri
	Italy	199-400089	09:00-13:00 ; 14:00-18:00 Mon-Fri
	Greece	00800-44142044	09:00-13:00 ; 14:00-18:00 Mon-Fri
	Austria	0043-820240513	09:00-18:00 Mon-Fri
	Netherlands/ Luxembourg	0031-591570290	09:00-17:00 Mon-Fri
	Belgium	0032-78150231	09:00-17:00 Mon-Fri
	Norway	0047-2316-2682	09:00-18:00 Mon-Fri
	Sweden	0046-858769407	09:00-18:00 Mon-Fri
	Finland	00358-969379690	10:00-19:00 Mon-Fri
	Denmark	0045-38322943	09:00-18:00 Mon-Fri
	Poland	0048-225718040	08:30-17:30 Mon-Fri
	Spain	0034-902889688	09:00-18:00 Mon-Fri
	Portugal	00351-707500310	09:00-18:00 Mon-Fri
	Slovak Republic	00421-232162621	08:00-17:00 Mon-Fri
	Czech Republic	00420-596766888	08:00-17:00 Mon-Fri
	Switzerland-German	0041-848111010	09:00-18:00 Mon-Fri
	Switzerland-French	0041-848111014	09:00-18:00 Mon-Fri
	Switzerland-Italian	0041-848111012	09:00-18:00 Mon-Fri
	United Kingdom	0044-1442265548	09:00-17:00 Mon-Fri
	Ireland	0035-31890719918	09:00-17:00 Mon-Fri
	Russia and CIS	008-800-100-ASUS	09:00-18:00 Mon-Fri
	Ukraine	0038-0445457727	09:00-18:00 Mon-Fri

E14742_RT-AC2600_QSG.indd 13 2018/9/27 14:49:24

Networks Global Hotline Information

Region	Country/ Area	Hotline Numbers	Service Hours
Asia-Pacific	Australia	1300-278788	09:00-18:00 Mon-Fri
	New Zealand	0800-278788	09:00-18:00 Mon-Fri
	Japan	0800-1232787 0081-570783886 (Non-Toll Free)	09:00-18:00 Mon-Fri 09:00-17:00 Sat-Sun 09:00-18:00 Mon-Fri 09:00-17:00 Sat-Sun
	Korea	0082-215666868	09:30-17:00 Mon-Fri
	Thailand	0066-24011717 1800-8525201	09:00-18:00 Mon-Fri
	Singapore	0065-64157917 0065-67203835 (Repair Status Only)	11:00-19:00 Mon-Fri 11:00-19:00 Mon-Fri 11:00-13:00 Sat
	Malaysia	1300-88-3495	9:00-18:00 Mon-Fri
	Philippine	1800-18550163	09:00-18:00 Mon-Fri
	India India(WL/NW)	1800-2090365	09:00-18:00 Mon-Sat 09:00-21:00 Mon-Sun
	Indonesia	0062-2129495000 500128 (Local Only)	09:30-17:00 Mon-Fri 9:30 – 12:00 Sat
	Vietnam	1900-555581	08:00-12:00 13:30-17:30 Mon-Sat
	Hong Kong	00852-35824770	10:00-19:00 Mon-Sat
	Taiwan	0800-093-456; 02-81439000	9:00-12:00 Mon-Fri; 13:30-18:00 Mon-Fri
Americas	USA Canada	1-812-282-2787	8:30-12:00 EST Mon-Fri 9:00-18:00 EST Sat-Sun
	Mexico	001-8008367847	08:00-20:00 CST Mon-Fri 08:00-15:00 CST Sat
	Brazil	4003 0988 (Capital) 0800 880 0988 (demais localidades)	9:00am-18:00 Mon-Fri

E14742_RT-AC2600_QSG.indd 14 2018/9/27 14:49:24

Networks Global Hotline Information

Region	Country/ Area	Hotline Numbers	Service Hours
Middle East + Africa	Egypt	800-2787349	09:00-18:00 Sun-Thu
	Saudi Arabia	800-1212787	09:00-18:00 Sat-Wed
	UAE	00971-42958941	09:00-18:00 Sun-Thu
	Turkey	0090-2165243000	09:00-18:00 Mon-Fri
	South Africa	0861-278772	08:00-17:00 Mon-Fri
	Israel	*6557/00972-39142800 *9770/00972-35598555	08:00-17:00 Sun-Thu 08:30-17:30 Sun-Thu
Balkan Countries	Romania	0040-213301786	09:00-18:30 Mon-Fri
	Bosnia Herzegovina	00387-33773163	09:00-17:00 Mon-Fri
	Bulgaria	00359-70014411 00359-29889170	09:30-18:30 Mon-Fri 09:30-18:00 Mon-Fri
	Croatia	00385-16401111	09:00-17:00 Mon-Fri
	Montenegro	00382-20608251	09:00-17:00 Mon-Fri
	Serbia	00381-112070677	09:00-17:00 Mon-Fri
	Slovenia	00368-59045400 00368-59045401	08:00-16:00 Mon-Fri
Baltic Countries	Estonia	00372-6671796	09:00-18:00 Mon-Fri
	Latvia	00371-67408838	09:00-18:00 Mon-Fri
	Lithua-nia-Kaunas	00370-37329000	09:00-18:00 Mon-Fri
	Lithuania-Vil-nius	00370-522101160	09:00-18:00 Mon-Fri

NOTES:

- UK support e-mail: **network_support_uk@asus.com**
- For more information, visit the ASUS support site at: **https://www.asus.com/support/**

E14742_RT-AC2600_QSG.indd 15 2018/9/27 14:49:24