Appendix A. SAR Plots of System Verification

The plots for system verification are shown as follows.

S01 System Check_H2450_210601

DUT: Dipole 2450 MHz; Type: D2450V2; SN: 737

Communication System: UID 0, CW; Frequency: 2450 MHz;Duty Cycle: 1:1
Medium: H19T27N1_0601 Medium parameters used (interpolated): f = 2450 MHz; σ = 1.857 S/m; ε_r = 38.837; ρ = 1000 kg/m^3
Ambient Temperature：23.6 ℃ ; Liquid Temperature：23.2 ℃

DASY5 Configuration:
- Probe: EX3DV4 - SN3887; ConvF(7.33, 7.33, 7.33) @ 2450 MHz; Calibrated: 2020/10/22
- Sensor-Surface: 1.4mm (Mechanical Surface Detection)
- Electronics: DAE4 Sn861; Calibrated: 2021/04/14
- Phantom: ELI Phantom_1206; Type: QDOVA002AA;
- Measurement SW: DASY52, Version 52.10 (4); SEMCAD X Version 14.6.14 (7483)

Pin=50mW/Area Scan (81x81x1): Interpolated grid: dx=1.200 mm, dy=1.200 mm
Maximum value of SAR (interpolated) = 6.66 W/kg

Pin=50mW/Zoom Scan (7x7x7)/Cube 0: Measurement grid: dx=5mm, dy=5mm, dz=5mm
Reference Value = 62.18 V/m; Power Drift = -0.05 dB
Peak SAR (extrapolated) = 8.33 W/kg
SAR(1 g) = 2.82 W/kg; SAR(10 g) = 1.14 W/kg (SAR corrected for target medium)
Maximum value of SAR (measured) = 6.71 W/kg

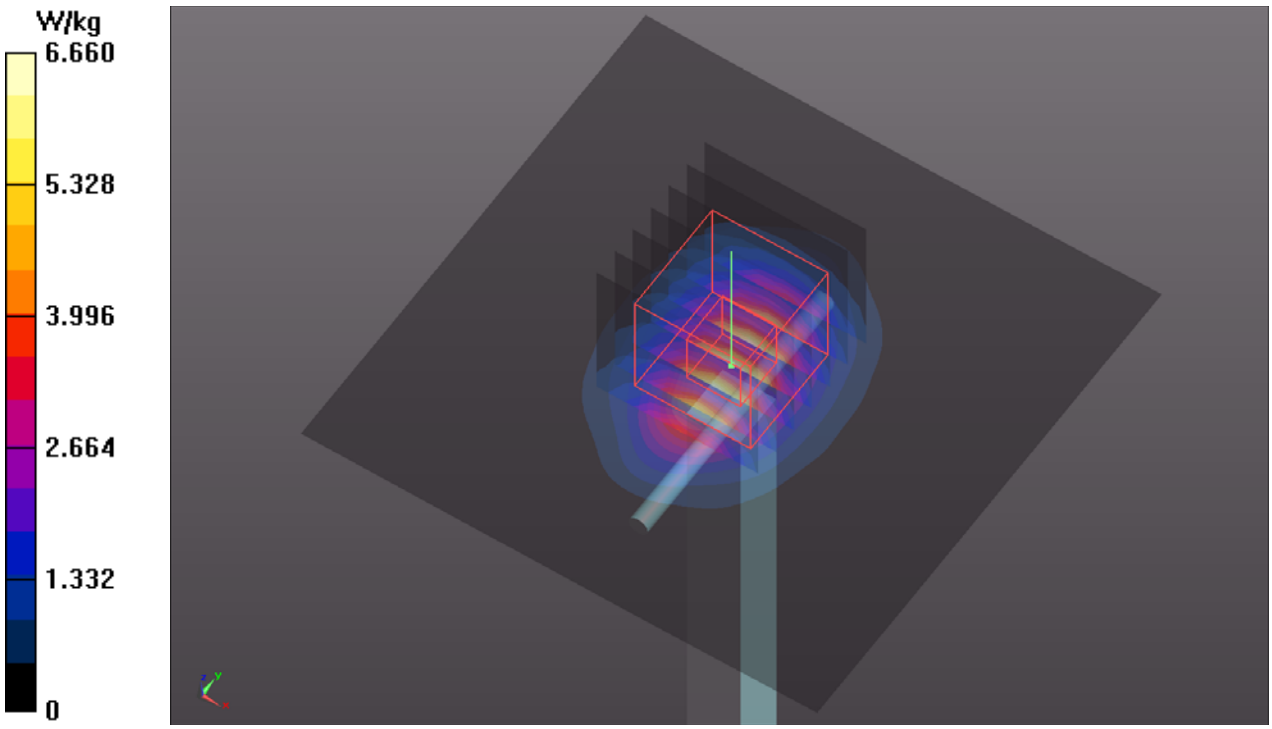

S02 System Check_H5250_210602

DUT: Dipole 5 GHz; Type: D5GHzV2; SN: 1019

Communication System: UID 0, CW; Frequency: 5250 MHz;Duty Cycle: 1:1
Medium: H34T60N1_0602 Medium parameters used (interpolated): f = 5250 MHz; σ = 4.76 S/m; ε_r = 35.003; ρ = 1000 kg/m^3
Ambient Temperature：23.6 ℃ ; Liquid Temperature：23.2 ℃

DASY5 Configuration:
- Probe: EX3DV4 - SN3887; ConvF(4.71, 4.71, 4.71) @ 5250 MHz; Calibrated: 2020/10/22
- Sensor-Surface: 1.4mm (Mechanical Surface Detection)
- Electronics: DAE4 Sn861; Calibrated: 2021/04/14
- Phantom: ELI Phantom_1206; Type: QDOVA002AA;
- Measurement SW: DASY52, Version 52.10 (4); SEMCAD X Version 14.6.14 (7483)

Pin=50mW/Area Scan (91x91x1): Interpolated grid: dx=1.000 mm, dy=1.000 mm
Maximum value of SAR (interpolated) = 11.1 W/kg

Pin=50mW/Zoom Scan (7x7x7)/Cube 0: Measurement grid: dx=4mm, dy=4mm, dz=1.4mm
Reference Value = 54.51 V/m; Power Drift = -0.04 dB
Peak SAR (extrapolated) = 17.7 W/kg
SAR(1 g) = 4.23 W/kg; SAR(10 g) = 1.29 W/kg (SAR corrected for target medium)
Maximum value of SAR (measured) = 11.4 W/kg

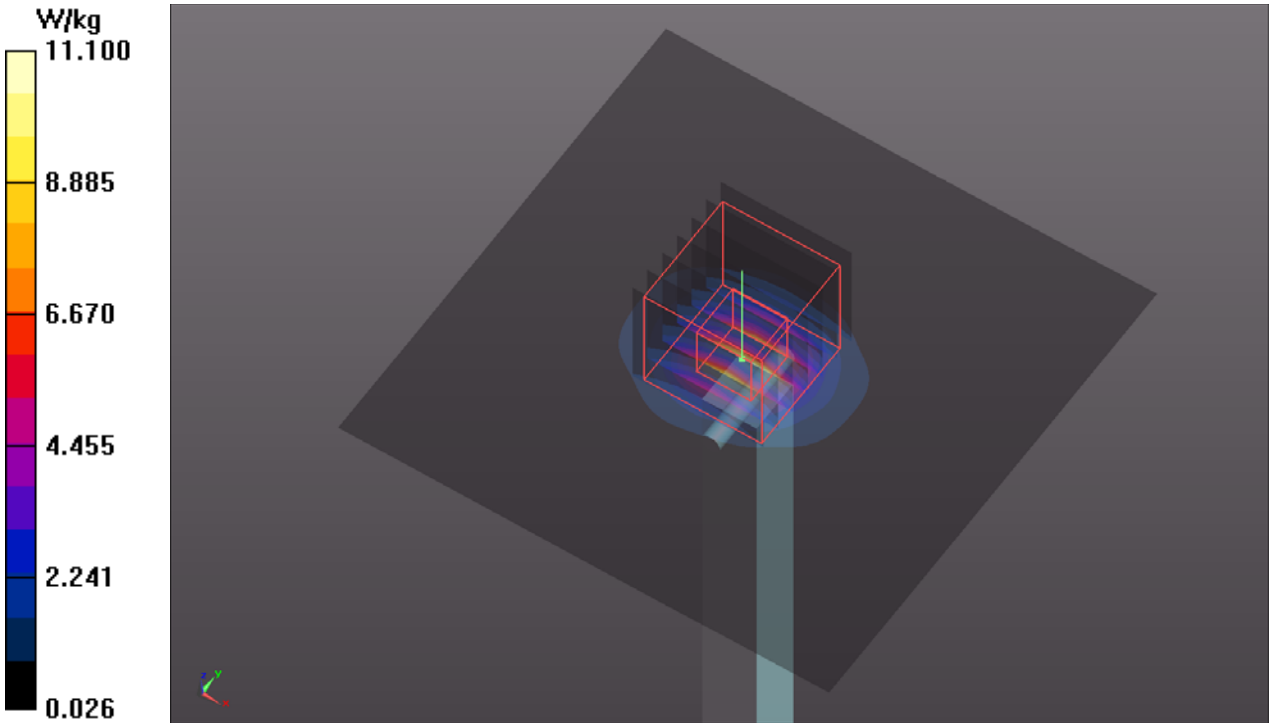

S03 System Check_H5750_210602

DUT: Dipole 5 GHz; Type: D5GHzV2; SN: 1019

Communication System: UID 0, CW; Frequency: 5750 MHz;Duty Cycle: 1:1
Medium: H34T60N1_0602 Medium parameters used: f = 5750 MHz; σ = 5.275 S/m; ε_r = 34.361; ρ = 1000 kg/m^3
Ambient Temperature：23.6 ℃ ; Liquid Temperature：23.2 ℃

DASY5 Configuration:
- Probe: EX3DV4 - SN3887; ConvF(4.36, 4.36, 4.36) @ 5750 MHz; Calibrated: 2020/10/22
- Sensor-Surface: 1.4mm (Mechanical Surface Detection)
- Electronics: DAE4 Sn861; Calibrated: 2021/04/14
- Phantom: ELI Phantom_1206; Type: QDOVA002AA;
- Measurement SW: DASY52, Version 52.10 (4); SEMCAD X Version 14.6.14 (7483)

Pin=50mW/Area Scan (91x91x1): Interpolated grid: dx=1.000 mm, dy=1.000 mm
Maximum value of SAR (interpolated) = 16.3 W/kg
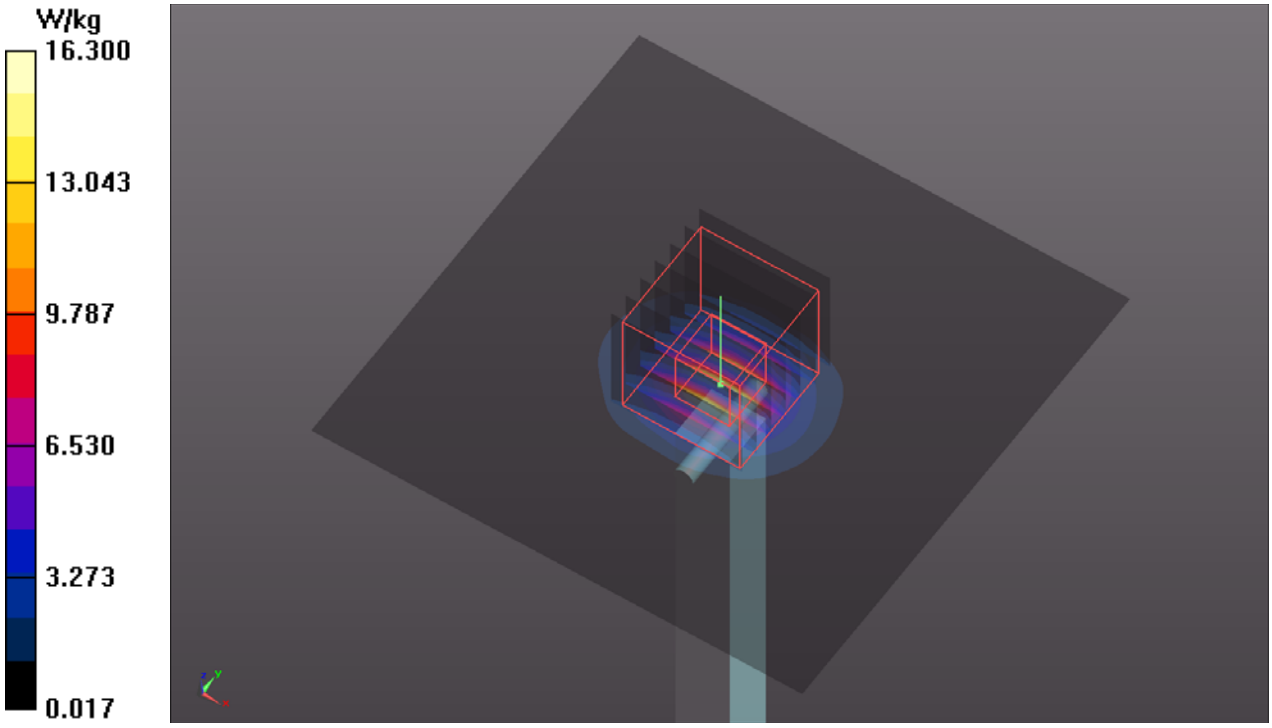
Pin=50mW/Zoom Scan (7x7x7)/Cube 0: Measurement grid: dx=4mm, dy=4mm, dz=1.4mm
Reference Value = 57.95 V/m; Power Drift = -0.16 dB
Peak SAR (extrapolated) = 29.8 W/kg
SAR(1 g) = 4.27 W/kg; SAR(10 g) = 1.28 W/kg (SAR corrected for target medium)
Maximum value of SAR (measured) = 17.2 W/kg