ANTENNA INFORMATION

OEM		ASUS
ODM		Quanta
Platform model name		GU605C GU605CP GU605CM GU605CH
Intel platform (ex: Yes, No or NA)		Yes
Platform type (ex: regular NB, convertible PC, AIO…etc)		Regular NB
SAR minimum separation (mm)	FCC (1g)	5.4mm
	ISED (1g)	5.4mm
	ISED (10g)	5.4mm

Antenna manufacturer	Company name	INPAQ
	Address	No.5,Chunqiu Road, Panyang Industrial Park Huangdai Town, Xiangcheng Zone, Suzhou
Test location	Company name	INPAQ
	Address	No.5,Chunqiu Road, Panyang Industrial Park Huangdai Town, Xiangcheng Zone, Suzhou
Test Personnel	Name(Full name)	Ivan Chang
	E-mail	IvanChang@inpaq.com.tw
	Tel/Mobile	
Testing date		2024-09-03

Antenna Part number	Main	WA-P-LE-02-265
	Aux	WA-P-LE-02-266
Antenna type (ex: PIFA, Dipole…etc)		PIFA

Antenna Peak gain w/ cable loss (dBi)*

	2.4GHz 2400-2483.5 MHz	5.2GHz 5150-5250MHz	5.3GHz 5250-5350MHz	5.6GHz 5470-5725MHz	5.8GHz 5725-5850MHz	5.9GHz 5850-5895MHz	6.2GHz 5925-6425MHz	6.5GHz 6425-6525MHz	6.7GHz 6525-6875MHz	7.0 GHz 6875-7125MHz
Main	2.40	2.09	2.25	3.58	3.79	2.79	1.76	1.21	3.13	3.34
Aux	2.45	2.41	2.54	3.04	3.57	2.78	3.56	2.89	3.61	3.28

Cable Assembly Part Number and Information

	Cable PN	**Cable length**(mm)	**Cable diameter**(mm)	**Impedance**(ohm)	**Connector type**
Main	WIR,RF-OD1.13/50, Low Loss, Black	450	1.13mm	50Ω	IPEX MHF-4L Plug-20565-001R-13A
Aux	WIR,RF-OD1.13/50, Low Loss, Black	500	1.13mm	50Ω	IPEX MHF-4L Plug-20565-001R-13A

* 3D Antenna Peak Gain required being test in system basis.

Table of Contents

Cover page……..... 1

1. Intel Reference Gain and Type……..... 3

2. Document Revision History..... 3

3. Test & System Description

3.1 Measurement Method and System..... 4

3.2 Test setup..... 4

3.3 Equipment list..... 5

4. Radiation characteristics of antenna loaded in Host Platform..... 6

Annex A. Photographs

A.1 Setup Photo..... 16

A.2 Test sample……..... 17

Annex B. Antenna Location

B.1 Antenna Host Platform Location Information.....19

B.2 Antenna dimensional information for SAR evaluation..... 20

1. Intel Reference Gain and Type

Antenna Peak gain w/ cable loss (dBi)											
Band/Frequency		**2.4GHz** 2400-2483.5 MHz	**5.2GHz** 5150-5250MHz	**5.3GHz** 5250-5350MHz	**5.6GHz** 5470-5725MHz	**5.8GHz** 5725-5850MHz	**5.9GHz** 5850-5895MHz	**6.2GHz** 5925-6425MHz	**6.5GHz** 6425-6525MHz	**6.7GHz** 6525-6875MHz	**7.0 GHz** 6875-7125MHz
Design	EU/UK	3.00	5.00	5.00	5.00	5.00	5.00	5.00	5.00	5.00	5.00
PIFA	For WiFi 6E and earlier	3.24	3.64	3.73	4.77	4.97	4.72	4.83	4.30	5.37	5.59
	From WiFi 7	2.95	5.11	4.55	5.15	5.13	4.45	5.02	5.02	4.96	4.96
Dipole	For WiFi 6E and earlier	2.89	2.92	3.19	4.41	4.22	4.22	4.83	4.30	4.49	5.34
	From WiFi 7	2.95	4.03	4.11	5.15	5.13	4.45	5.02	4.71	4.49	4.96
Monopole	From WiFi 7	2.83	4.57	4.44	4.95	4.95	4.43	4.87	4.91	4.91	4.79

3D Peak Antenna gain should be equal or greater than -2 dBi

If a host integrator plans to use a lower gain antenna of the same type, additional CBP(FCC)/EDT(EU) testing need to be performed while the module is installed in the host.

2. Document Revision History

Revision #	Revision Details	Issued Date
Rev. 00	First Issue	

3. Test & System Description

3.1 Measurement Method and System

ETS-Lindgren AMS-8500 system is 3D fully anechoic chamber, it is applied to the “Conical Cut test method”, the detail description is described as below.

The Conical Cut method requires the ability of the Measurement Antenna to be physically rotated in the theta plane (overhead) of the EUT for implementations using a single Measurement Antenna, Eleven conical cuts are required to capture data at every 15 degrees from the EUT, with the top (0 degrees) and bottom (180 degrees) cuts not being measured. Typically, the EUT will remain affixed to a turntable during the entire measurement process. The Measurement Antenna will be positioned at a starting theta angle. The EUT will then be rotated around the full 360 degrees of phi rotation. The Measurement Antenna will then be positioned at the next theta angle, and the process repeated.

		θ-Axis	Φ-Axis
Passive	Step size	15º~165º step: 15º	0º~345º step: 15º
	N / M (Points)	12	24

3.2 Test setup

Typical Setup for ETS-Lindgren AMS-8500:

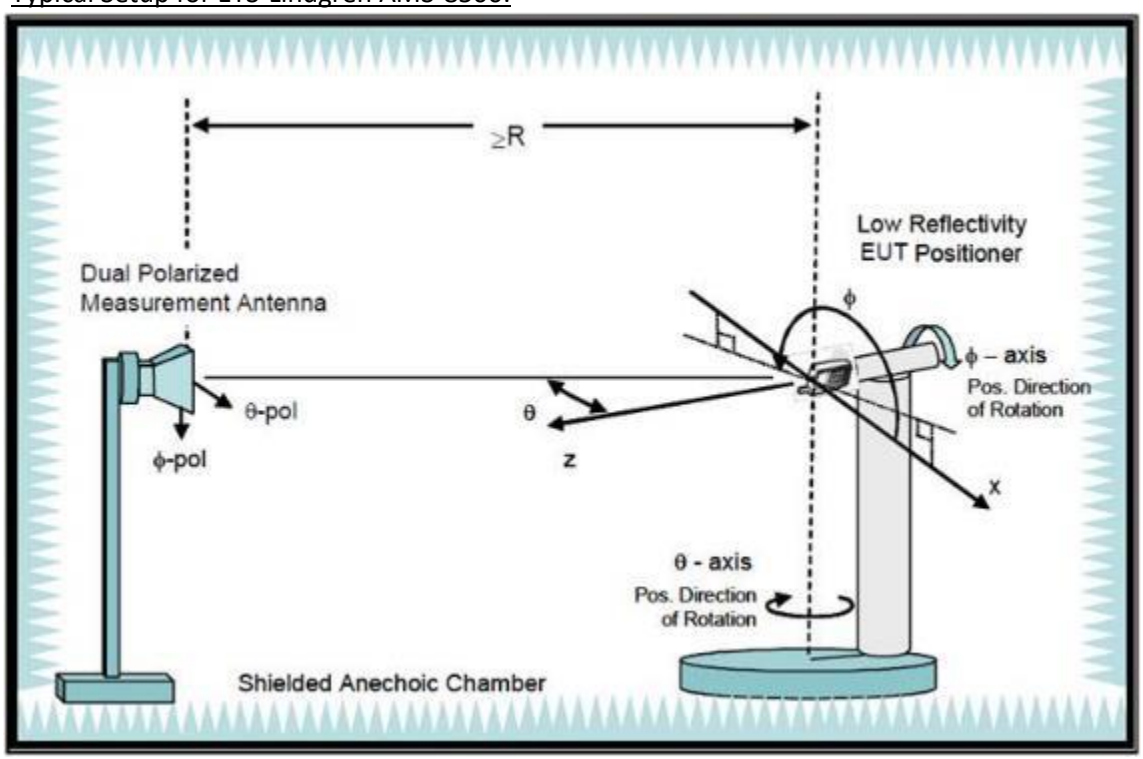

3.3 Equipment list

Equipment Description	Manufacturer	Identification no.	Current calibration date	Next calibration date
Network analyzer	Agilent	E5071C	2023/01/07	2024/01/06
Measurement software	ETS-Lindgren	EMQuest	2023/03/03	2024/03/03
Multi axis positioning system(MAPSTM)	ETS-Lindgren	EMCO 2115	2023/03/03	2024/03/03
Multi axis positioning system(MAPSTM)	ETS-Lindgren	EMCO 2110	2023/03/03	2024/03/03
MAPSTM controller	ETS-Lindgren	EMCO 2090	2023/03/03	2024/03/03
Horn antenna	ETS-Lindgren	3164-10	2023/03/03	2024/03/03
Cable 40cm 18 GHz	Jmtt	201EH012010400	2023/04/07	2024/04/07
Cable 6m 18 GHz	Jmtt	201EH012016000	2023/04/07	2024/04/07
Cable 6m 18 GHz	Jmtt	201EH012016000	2023/04/07	2024/04/07
Cable 3.5m 18 GHz	Jmtt	201EH012013500	2023/04/07	2024/04/07
Cable 1.5m 18 GHz	Jmtt	201EH012011500	2023/04/07	2024/04/07

Antenna Information

1A Antenna Part Number	1B Manufacturer	1C Antenna Type	1D Cable Assembly Part Number and Information	Freq Range MHz	1E * Peak Gain W/ Cable loss (dBi)	1F Peak Gain w/o Cable Loss (dBi)	1G Max VSWR	1H Cable Loss (dB)
P/N: WA-P-LE-02-265 Main Antenna	INPAQ TECHNOLOGY CO., LTD	PIFA	Connector: I-PEX MHF-4L 50 ohm Coaxial length:450 mm diameter: 1.13mm	2400-2483.5	2.4	3.65	3	1.25
				5150-5250	2.09	3.95	3	1.86
				5250-5350	2.25	4.13	3	1.88
				5470-5725	3.58	5.5	3	1.92
				5725-5850	3.79	5.74	3	1.95
				5850-5895	2.79	4.75	3	1.96
				5925-6425	1.76	3.8	3	2.04
				6425-6525	1.21	3.29	3	2.08
				6525-6875	3.13	5.26	3	2.13
				6875-7125	3.34	5.54	3	2.2
P/N: WA-P-LE-02-266 Aux Antenna	INPAQ TECHNOLOGY CO., LTD	PIFA	Connector: I-PEX MHF-4L 50 ohm Coaxial length: 500mm diameter: 1.31mm	2400-2483.5	2.45	3.84	3	1.39
				5150-5250	2.41	4.48	3	2.07
				5250-5350	2.54	4.63	3	2.09
				5470-5725	3.04	5.17	3	2.13
				5725-5850	3.57	5.73	3	2.16
				5850-5895	2.78	4.96	3	2.18
				5925-6425	3.56	5.83	3	2.27
				6425-6525	2.89	5.2	3	2.31
				6525-6875	3.61	5.98	3	2.37
				6875-7125	3.28	5.72	3	2.44

3D Antenna Peak Gain required being test in system basis.

4. Radiation characteristics of antenna loaded in Host Platform

Main Antenna

Max Antenna 3D Radiation Pattern 2400 – 2483.5 MHz

Frequency (MHz)	Peak Gain w/ Cable Loss (dBi)
2400-2483.5	2.40

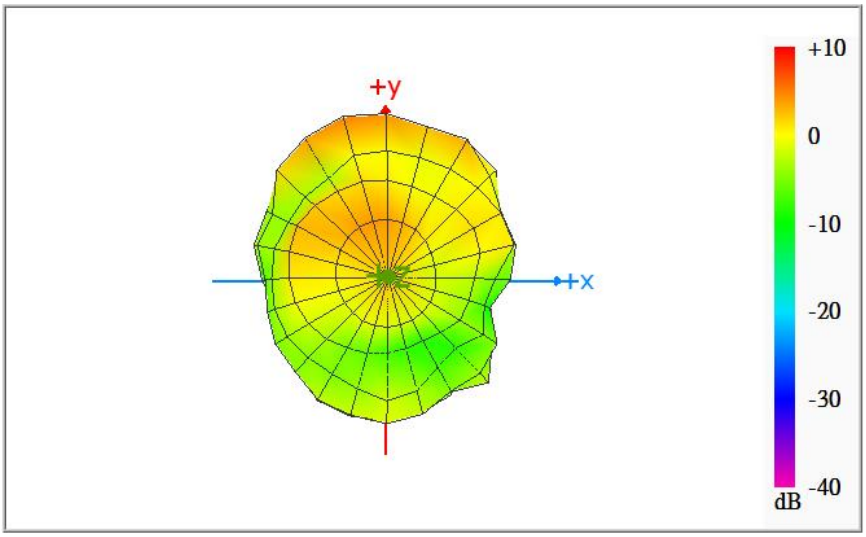

Max Antenna 3D Radiation Pattern 5150-5250 MHz

Frequency (MHz)	Peak Gain w/ Cable Loss (dBi)
5150-5250	2.09

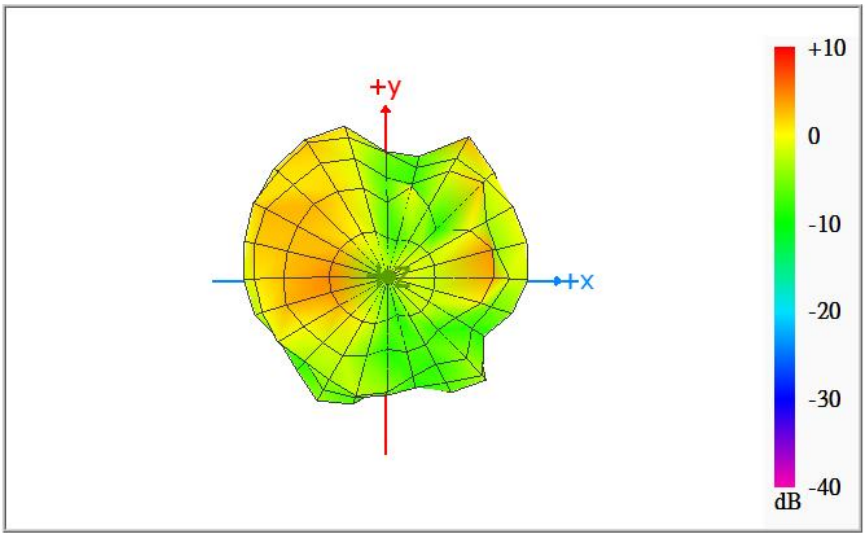

Max Antenna 3D Radiation Pattern 5250-5350 MHz

Frequency (MHz)	Peak Gain w/ Cable Loss (dBi)
5250-5350	2.25

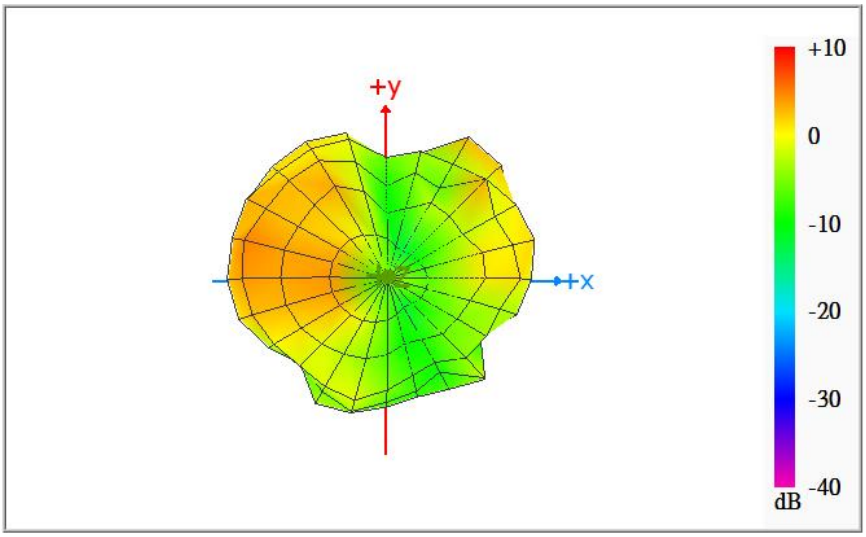

Max Antenna 3D Radiation Pattern 5470-5725 MHz

Frequency (MHz)	Peak Gain w/ Cable Loss (dBi)
5470-5725	3.58

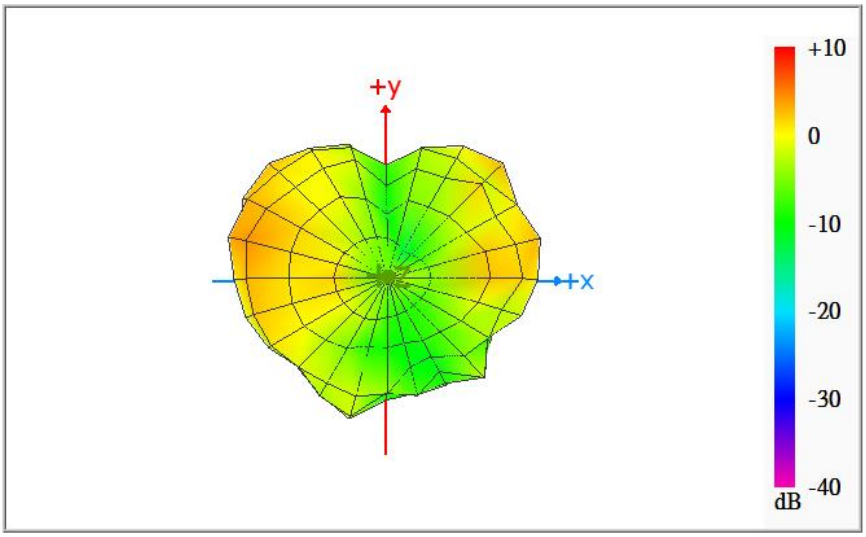

Max Antenna 3D Radiation Pattern 5725-5850 MHz

Frequency (MHz)	Peak Gain w/ Cable Loss (dBi)
5725-5850	3.79

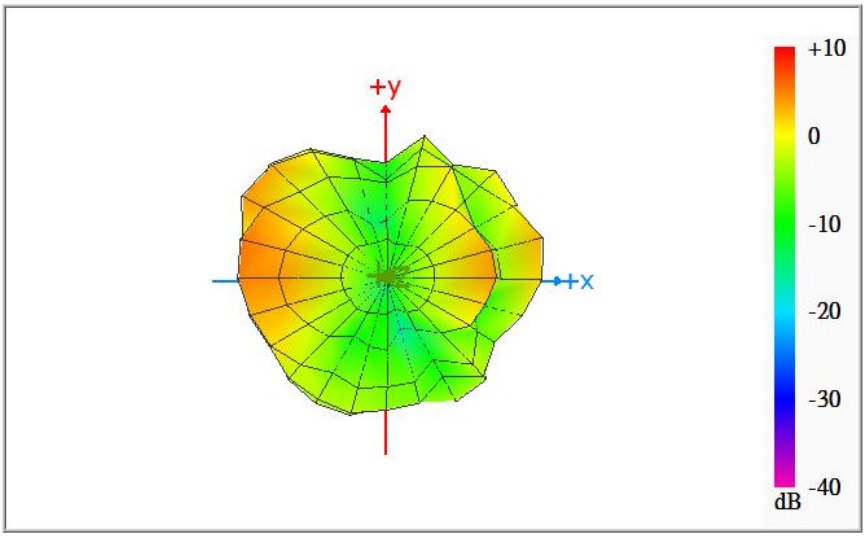

Max Antenna 3D Radiation Pattern 5850-5895 MHz

Frequency (MHz)	Peak Gain w/ Cable Loss (dBi)
5850-5895	2.79

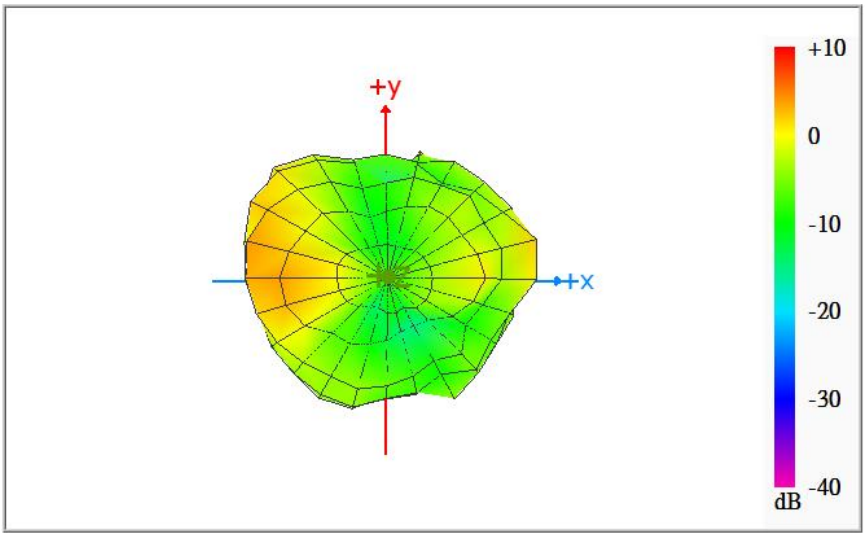

Max Antenna 3D Radiation Pattern 5925-6425 MHz

Frequency (MHz)	Peak Gain w/ Cable Loss (dBi)
5925-6425	1.76

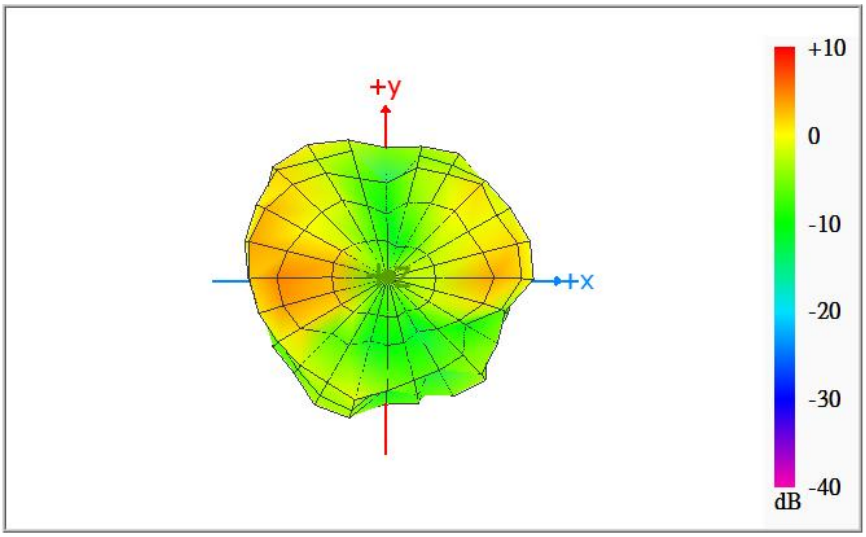

Max Antenna 3D Radiation Pattern 6425-6525 MHz

Frequency (MHz)	Peak Gain w/ Cable Loss (dBi)
6425-6525	1.21

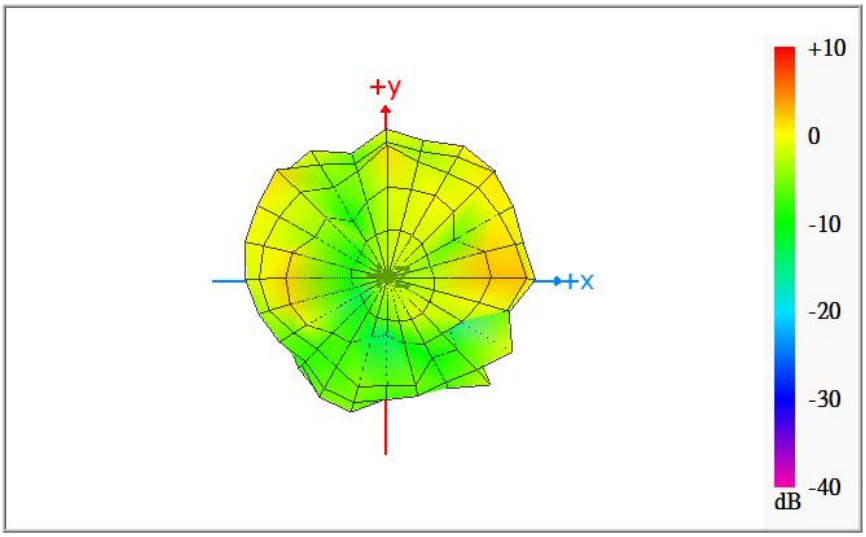

Max Antenna 3D Radiation Pattern 6525-6875 MHz

Frequency (MHz)	Peak Gain w/ Cable Loss (dBi)
6525-6875	3.13

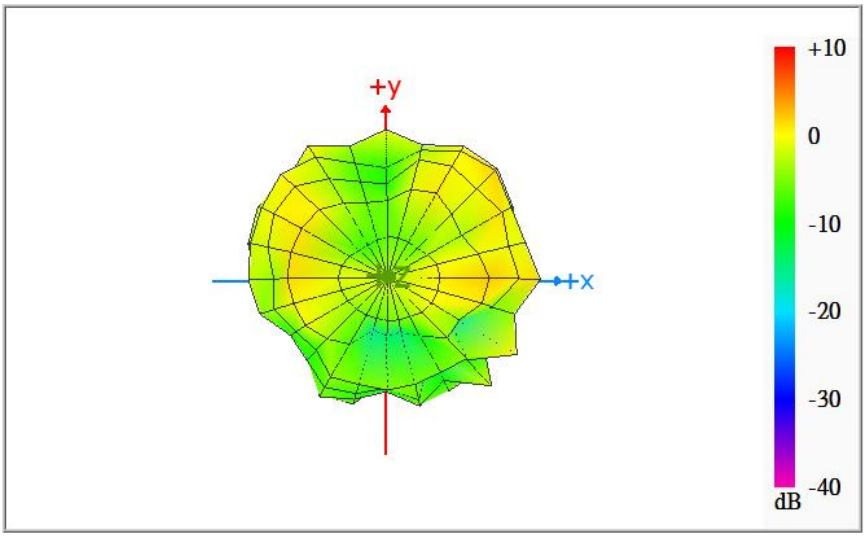

Max Antenna 3D Radiation Pattern 6875-7125 MHz

Frequency (MHz)	Peak Gain w/ Cable Loss (dBi)
6875-7125	3.34

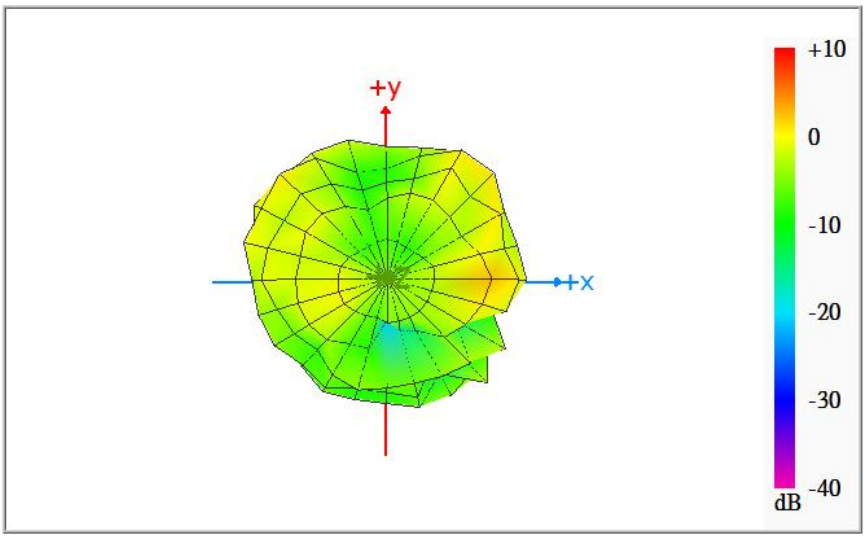

Auxiliary Antenna

Max Antenna 3D Radiation Pattern 2400 – 2483.5 MHz

Frequency (MHz)	Peak Gain w/ Cable Loss (dBi)
2400-2483.5	2.45

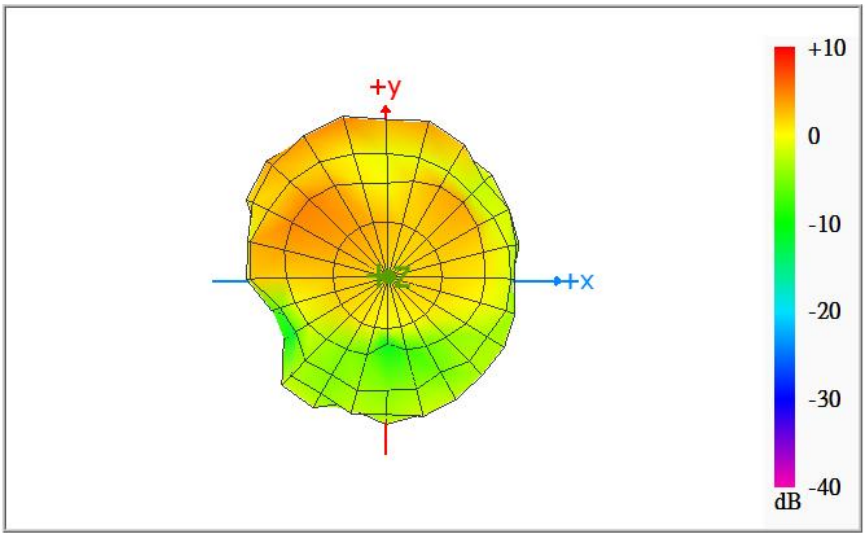

Max Antenna 3D Radiation Pattern 5150-5250 MHz

Frequency (MHz)	Peak Gain w/ Cable Loss (dBi)
5150-5250	2.41

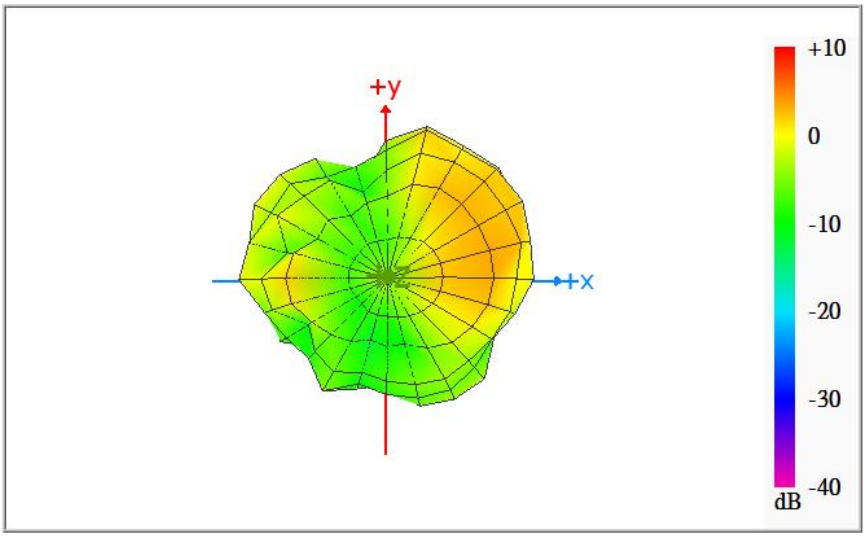

Max Antenna 3D Radiation Pattern 5250-5350 MHz

Frequency (MHz)	Peak Gain w/ Cable Loss (dBi)
5250-5350	2.54

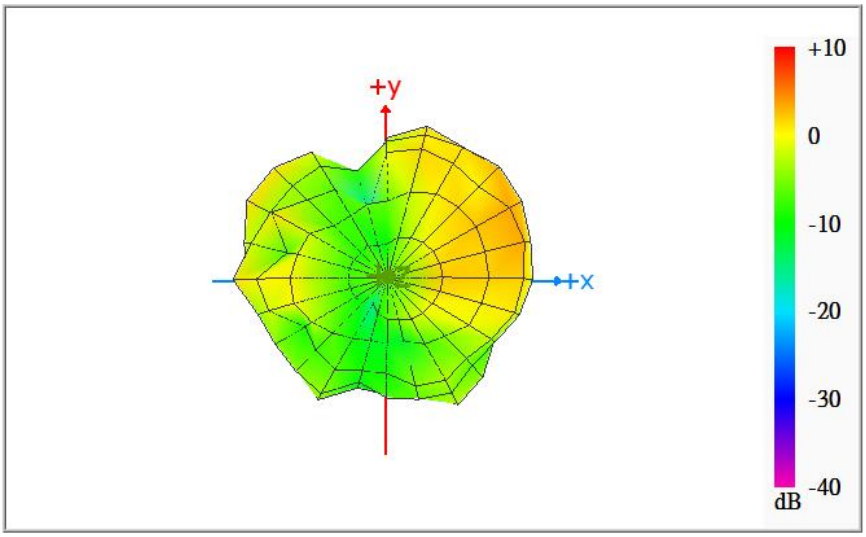

Max Antenna 3D Radiation Pattern 5470-5725 MHz

Frequency (MHz)	Peak Gain w/ Cable Loss (dBi)
5470-5725	3.04

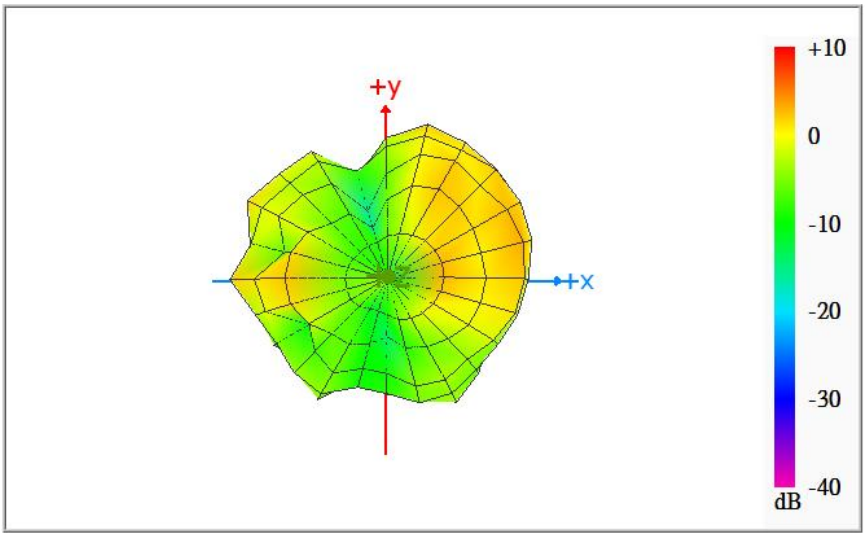

Max Antenna 3D Radiation Pattern 5725-5850 MHz

Frequency (MHz)	Peak Gain w/ Cable Loss (dBi)
5725-5850	3.57

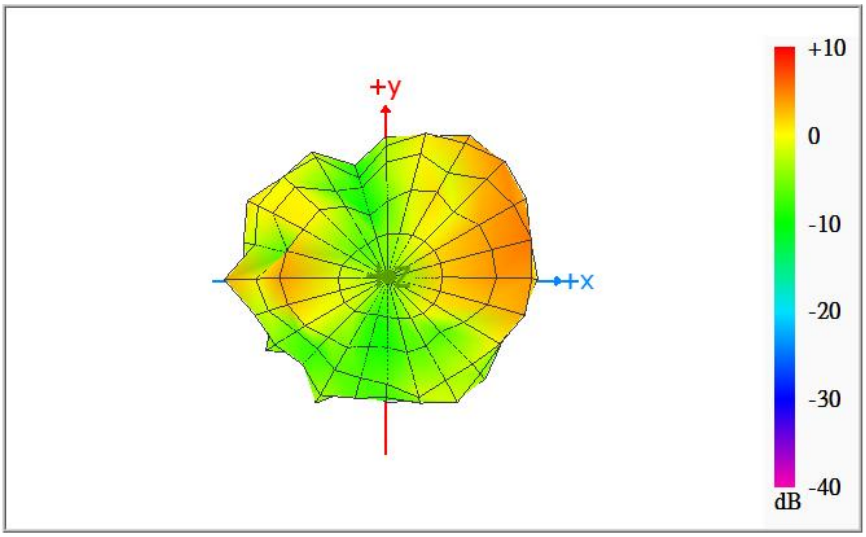

Max Antenna 3D Radiation Pattern 5850-5895 MHz

Frequency (MHz)	Peak Gain w/ Cable Loss (dBi)
5850-5895	2.78

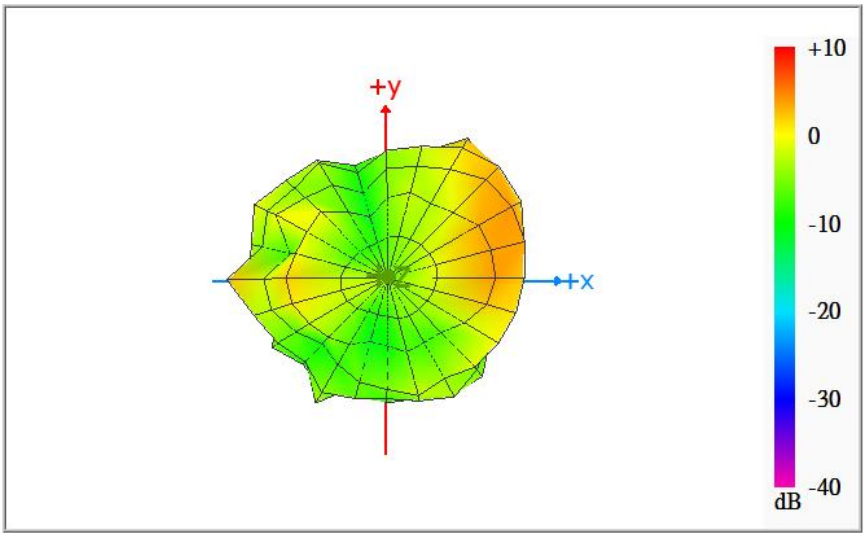

Max Antenna 3D Radiation Pattern 5925-6425 MHz

Frequency (MHz)	Peak Gain w/ Cable Loss (dBi)
5925-6425	3.56

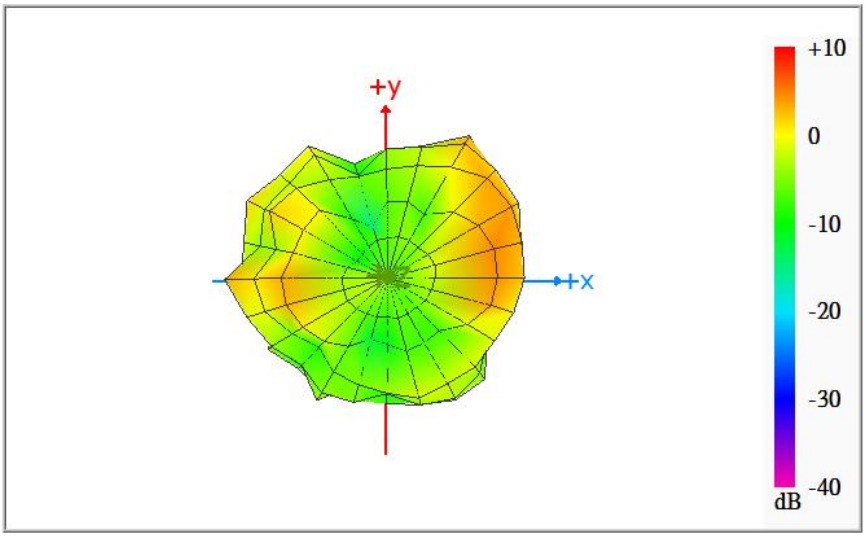

Max Antenna 3D Radiation Pattern 6425-6525 MHz

Frequency (MHz)	Peak Gain w/ Cable Loss (dBi)
6425-6525	2.89

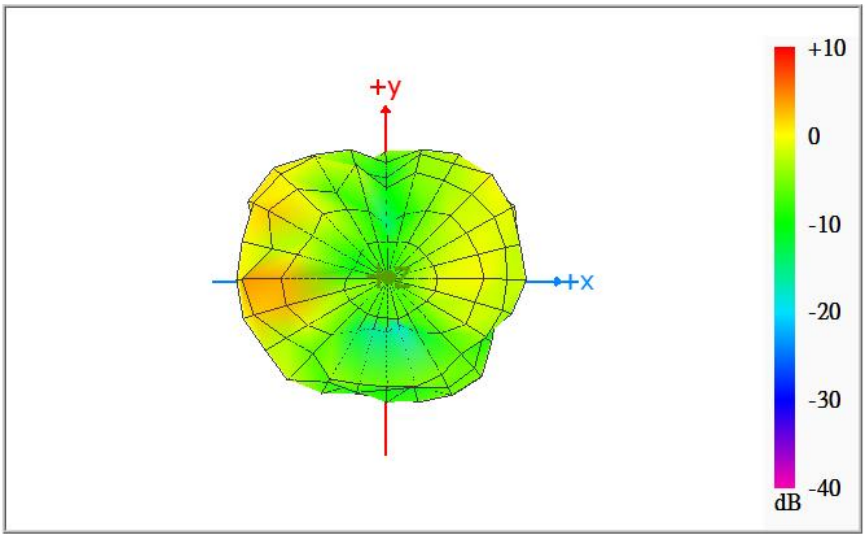

Max Antenna 3D Radiation Pattern 6525-6875 MHz

Frequency (MHz)	Peak Gain w/ Cable Loss (dBi)
6525-6875	3.61

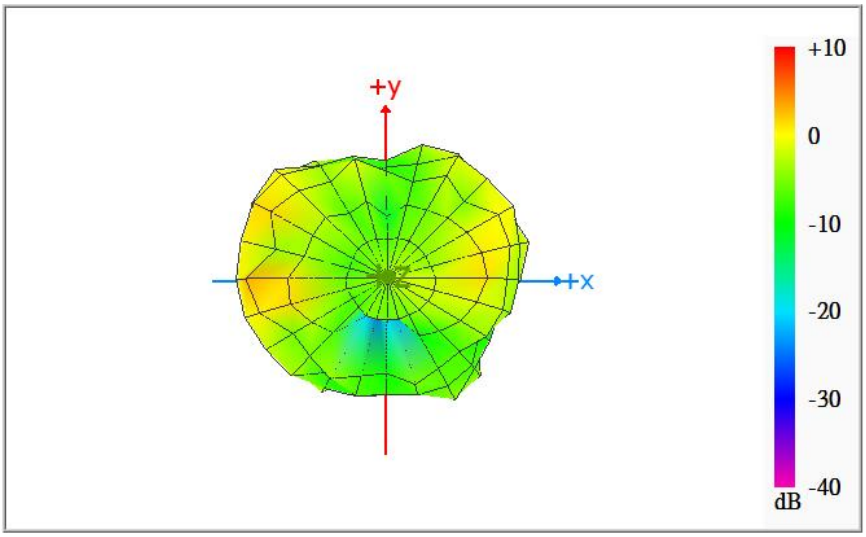

Max Antenna 3D Radiation Pattern 6875-7125 MHz

Frequency (MHz)	Peak Gain w/ Cable Loss (dBi)
6875-7125	3.28

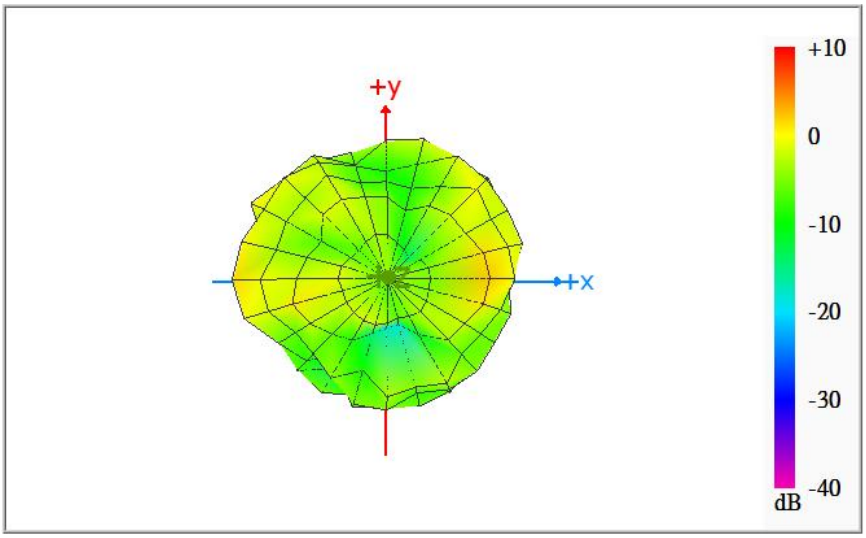

Annex B. Antenna Location

B.1 Antenna Host Platform Location Information

Include a dimensioned photo(s) or dimensioned drawing(s) of Main and Aux antenna placements (measurements are not required for receive-only antenna).

Any antenna that transmits must show dimensions to bottom of laptop. Provide a description of the materials that are used for supporting or surrounding transmit antennas; for example, non-conductive plastics vs. conductive coated plastic or metallic materials.

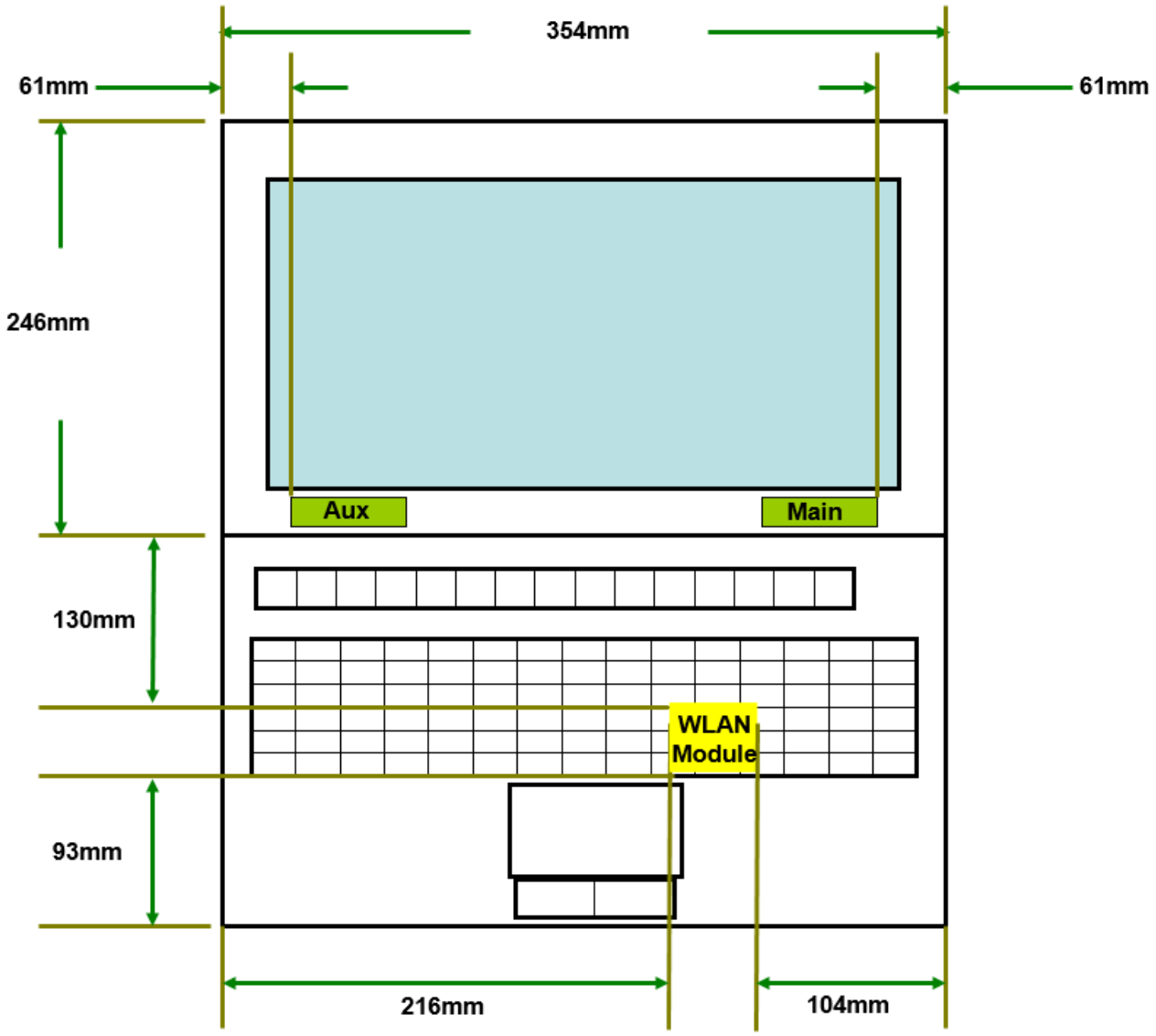

B.2 Antenna dimensional information for SAR evaluation

Include a dimensioned photo(s) or dimensioned drawing(s) showing the distance (mm) between the transmit antennas and the user. For notebook/laptop hosts show lapheld position (example below). For tablet hosts show all orientations including lapheld, primary & secondary portrait, primary & secondary landscape positions. Include a description of any proximity sensors or power throttling implementations that limit or exclude use of any host orientation.

Antennas on the panel section

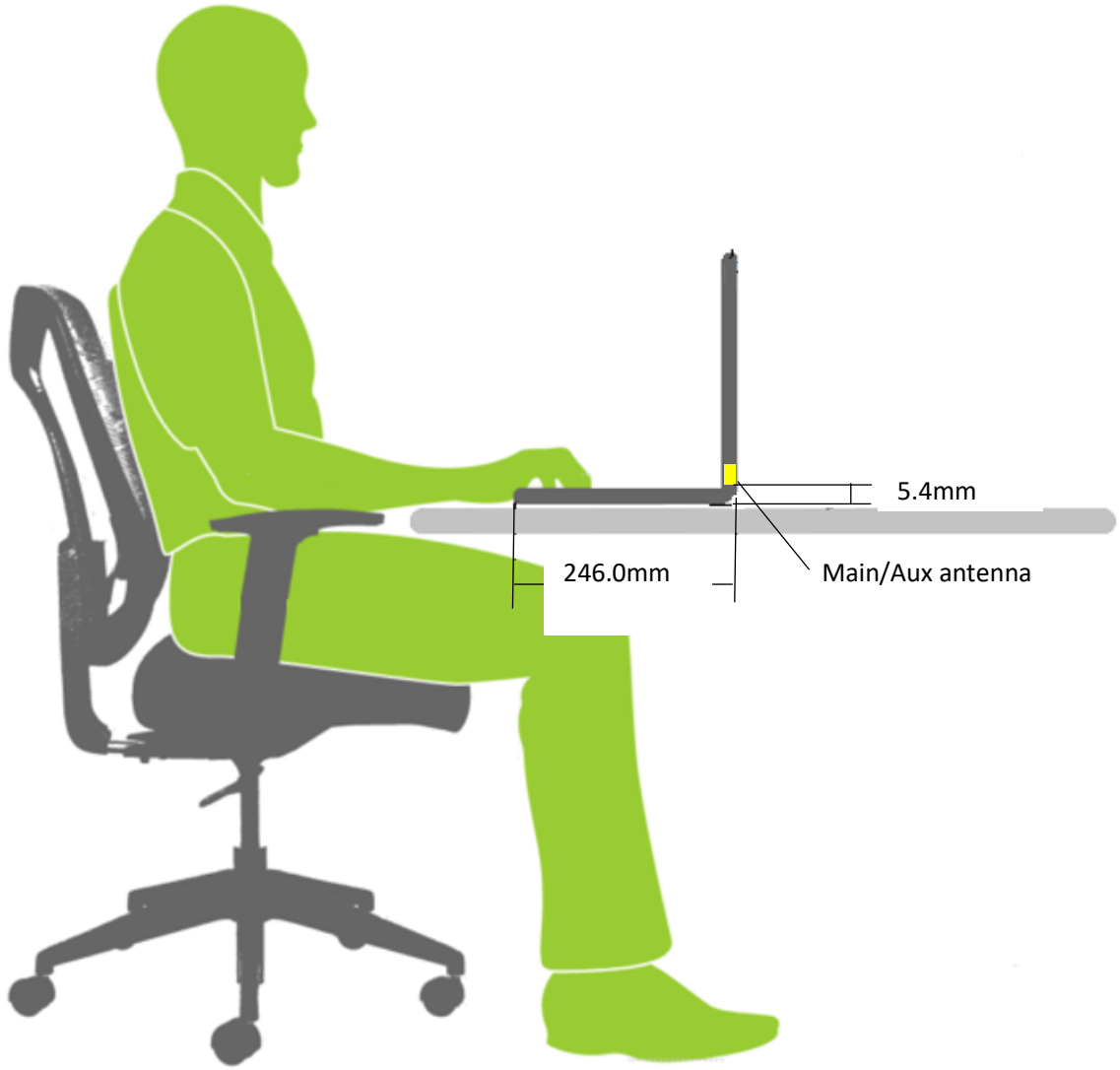

Measuring Surface	Antenna	Separation Distance(antenna-to- Surface)(mm)	1g SAR
Bottom Side	Main	**5.4mm**	FCC/ISED
	Aux	**5.4mm**	FCC/ISED

Not available

The antennas are on the bottom of LCD

Antennas on the keyboard section

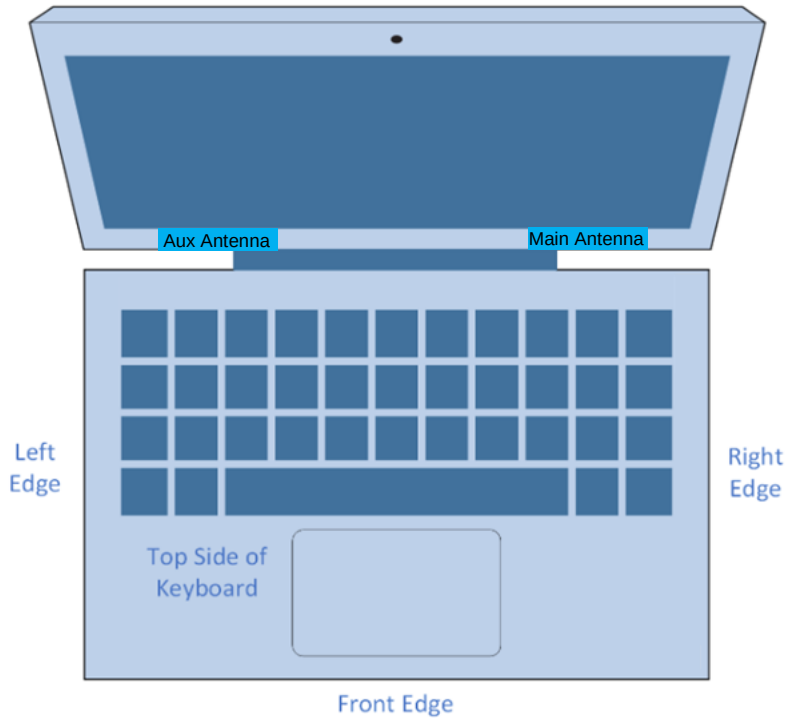

Measuring Surface	Antenna	Separation Distance(antenna-to-Surface)(mm)	1g or 10g SAR
Bottom Side	Main		1g (FCC/ISED)
	Aux		1g (FCC/ISED)
Front Edge	Main		1g (ISED)
	Aux		1g (ISED)
Left Edge	Main		10g (ISED)
	Aux		10g (ISED)
Right Edge	Main		10g (ISED)
	Aux		10g (ISED)
Top side of Keyboard	Main		10g (ISED)
	Aux		10g (ISED)