RF Test Report

Applicant	:	ASUSTeK COMPUTER INC.
Product Type	:	Notebook PC
Trade Name	:	ASUS
Model Number	:	G733Z, G733ZX, G733ZS, G733ZW, G733ZM, G743Z, G743ZX, G743ZS, G743ZW, G743ZM, G733ZE, G733ZC, G743ZC, G743ZE
Applicable Standard	:	FCC 47 CFR PART 15 SUBPART C ANSI C63.10:2013
Received Date	:	Sep. 22, 2021
Test Period	:	Sep. 27 ~ Oct. 03, 2021
Issued Date	:	Oct. 29, 2021

Issued by

A Test Lab Techno Corp.
No. 140-1, Changan Street, Bade District,
Taoyuan City 33465, Taiwan (R.O.C.)
Tel：+886-3-2710188 / Fax：+886-3-2710190

Taiwan Accreditation Foundation accreditation number: 1330
Frequency Range : 9 kHz to 40 GHz
Test Firm MRA designation number: TW0010

Note:

1.The test results are valid only for samples provided by customers and under the test conditions described in this report.
2.This report shall not be reproduced except in full, without the written approval of A Test Lab Technology Corporation.
3.The relevant information is provided by customers in this test report. According to the correctness, appropriateness or completeness of the information provided by the customer, if there is any doubt or error in the information which affects the validity of the test results, the laboratory does not take the responsibility.

Revision History

Rev.	Issued Date	Revisions	Revised By
00	Oct. 29, 2021	Initial Issue	Emma Chao

Verification of Compliance

Applicant	:	ASUSTeK COMPUTER INC.
Product Type	:	Notebook PC
Trade Name	:	ASUS
Model Number	:	G733Z, G733ZX, G733ZS, G733ZW, G733ZM, G743Z, G743ZX, G743ZS, G743ZW, G743ZM, G733ZE, G733ZC, G743ZC, G743ZE
FCC ID	:	MSQG733Z
EUT Rated Voltage	:	DC 20 V, 5 A / DC 20 V, 10 A / DC 20 V, 12 A / DC 20 V, 14 A
Test Voltage	:	120 Vac / 60 Hz
Applicable Standard	:	FCC 47 CFR PART 15 SUBPART C ANSI C63.10:2013
Test Result	:	Complied
Performing Lab.	:	A Test Lab Techno Corp. No. 140-1, Changan Street, Bade District, Taoyuan City 33465, Taiwan (R.O.C.) Tel：+886-3-2710188 / Fax：+886-3-2710190 Taiwan Accreditation Foundation accreditation number: 1330 http://www.atl-lab.com.tw/e-index.htm

A Test Lab Techno Corp. tested the above equipment in accordance with the requirements set forth in the above standards. All indications of Pass/Fail in this report are opinions expressed by A Test Lab Techno Corp. based on interpretations and/or observations of test results. The test results show that the equipment tested is capable of demonstrating compliance with the requirements as documented in this report.

Approved By : Fly Lu

(Fly Lu)

TABLE OF CONTENTS

1 General Information 5

1.1. Summary of Test Result 5

1.2. Measurement Uncertainty 5

2 EUT Description 6

3 Test Methodology 7

3.1. Mode of Operation 7

3.2. EUT Test Step 7

3.3. Configuration of Test System Details 8

3.4. Test Instruments 10

3.5. Test Site Environment 12

4 Measurement Procedure 13

4.1. AC Power Line Conducted Emission Measurement 13

4.2. Radiated Emission Measurement 15

4.3. Frequency Stability Measurement 19

4.4. 20 dB Bandwidth Measurement 20

4.5. Antenna Requirement 21

5 Test Results 22

Annex A. Conducted Emission 22

Annex B. Conducted Test Results 24

Annex C. Radiated Emission Measurement 26

1 General Information

1.1. Summary of Test Result

Standard	Item	Results	Remark
15.203	Antenna Requirement	Meet Require	---
15.207(a)	Conducted Emissions Voltage	PASS	---
15.225 (a), (b), (c), (d) 15.209	Radiated Emission Limits	PASS	---
15.225(e)	Frequency Stability	PASS	---
15.215(c)	20 dB Bandwidth	Reference	---
CFR 47 Part 15.225 / ANSI C63.10:2013			

Standard	Description
CFR47, Part 15, Subpart C	Intentional Radiators
ANSI C63. 10: 2013	American National Standard of Procedures for Compliance Testing of Unlicensed Wireless Devices

Decision Rule

■ Uncertainty is not included.

□ Uncertainty is included.

1.2. Measurement Uncertainty

Test Item	Frequency Range	Uncertainty
Conducted Emission	150 kHz ~ 30 MHz	2.7 dB
Radiated Emission	9 kHz ~ 30 MHz	2.2 dB
	30 MHz ~ 1000 MHz	5.1 dB
	1000 MHz ~ 18000 MHz	5.2 dB
	18000 MHz ~ 26500 MHz	4.6 dB
	26500 MHz ~ 40000 MHz	4.6 dB
RF Bandwidth		4.7 %
Frequency Stability		1.3 x 10^-7

2 EUT Description

Applicant	ASUSTeK COMPUTER INC. 1F., No. 15, Lide Rd., Beitou Dist., Taipei City 112, Taiwan
Manufacturer	ASUSTeK COMPUTER INC. 1F., No. 15, Lide Rd., Beitou Dist., Taipei City 112, Taiwan
Product	Notebook PC
Trade Name	ASUS
Model Number	G733Z, G733ZX, G733ZS, G733ZW, G733ZM, G743Z, G743ZX, G743ZS, G743ZW, G743ZM, G733ZE, G733ZC, G743ZC, G743ZE
FCC ID	MSQG733Z
Frequency Range	13.56 MHz
Modulation Type	ASK
Number of Channels	1 Channel
Antenna Type	PCB Antenna
Operate Temp. Range	+5 ~ 35°C

3 Test Methodology

3.1. Mode of Operation

In the test report use EUT model: G733Z to operate testing.
The following test mode(s) were scanned during the preliminary test：

Test Mode
Mode 1: Transmit Mode
Mode 2: Continuous TX Mode

After verification, all tests were carried out with the worst case test modes.

ATL has verified the construction and function in typical operation. All the test modes were carried out with the EUT in normal operation.

Note：The device is used with adapter (number：ADP-280BB) performing the test.

3.2. EUT Test Step

1.	Setup the EUT shown on “Configuration of Test System Details.”
2.	Turn on the power of all equipment.
3.	The EUT will start to operate function.

Measurement Software			
No.	Description	Software	Version
1	Conducted Emission	EZ EMC	1.1.4.3
2	Radiated Emission	EZ EMC	1.1.4.4

3.3. Configuration of Test System Details

Conducted Emission

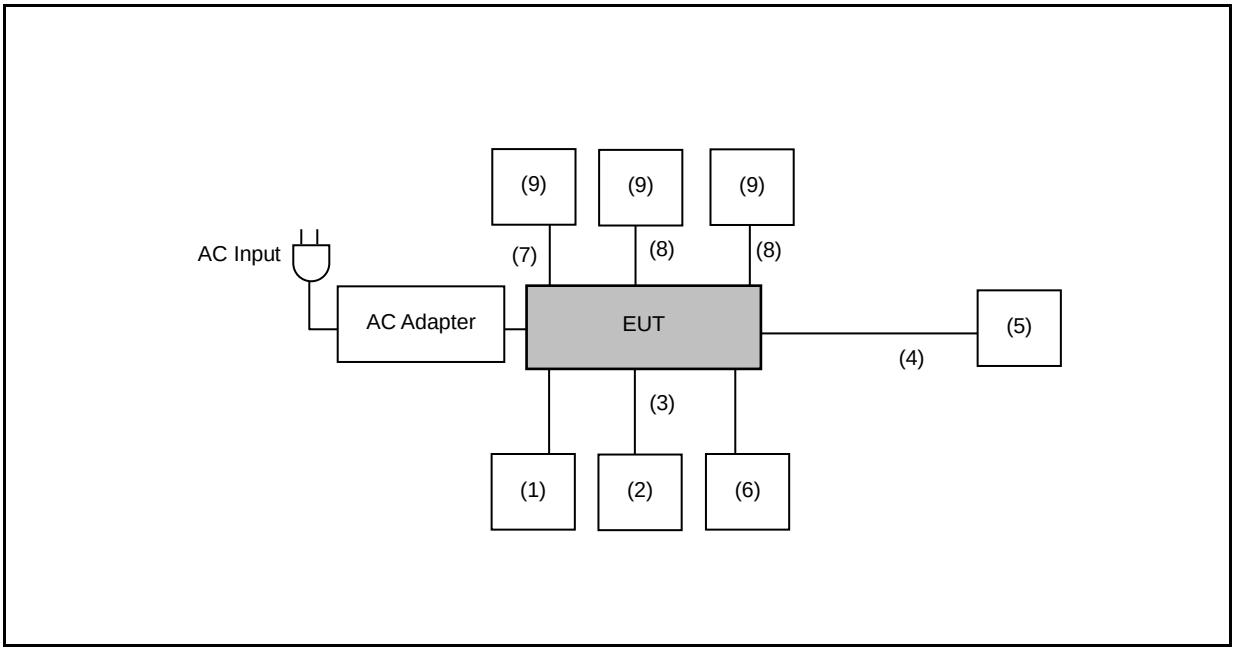

Radiated Emission

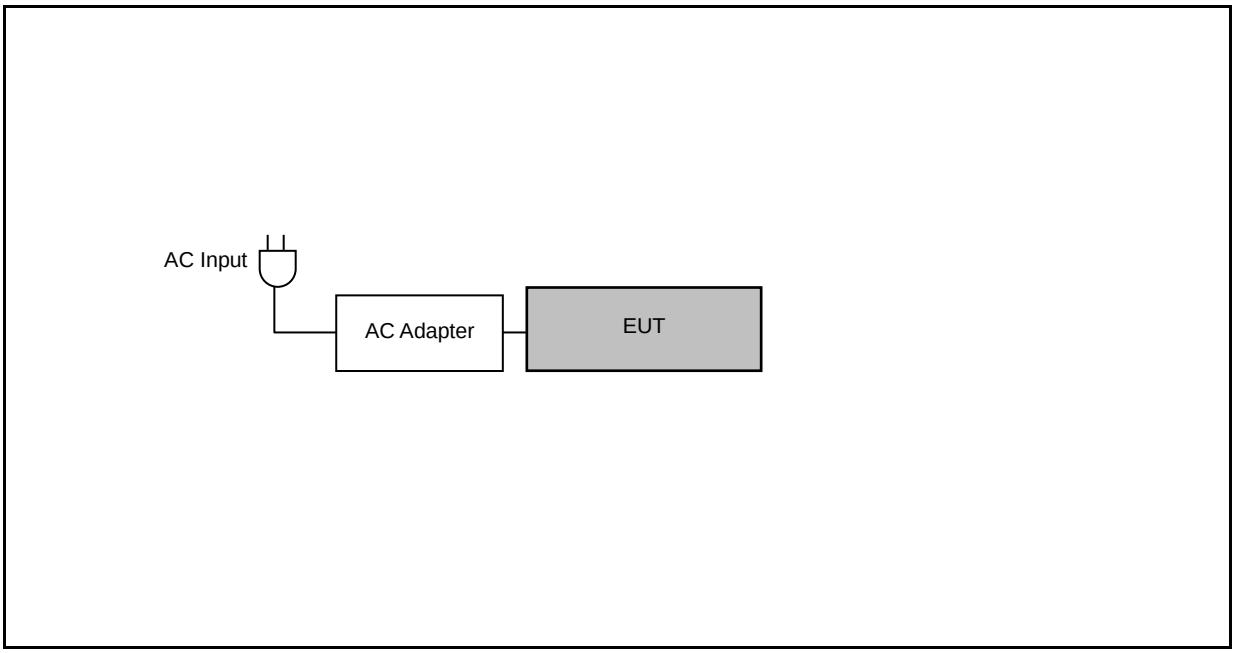

Devices Description					
Product		Manufacturer	Model Number	Serial Number	Power Cord
(1)	Mouse	ASUS	MOBTUOA	---	---
(2)	HDD	Transend	TS1TSJ25A3K	---	---
(3)	USB Cable	Transend	TS1TSJ25A3K	---	---
(4)	Lan Cable	HUAWEI	UL2464	---	---
(5)	Access Point	Netgear	R7800	---	---
(6)	Earphone	HUAWEI	22040296	---	---
(7)	HDMI Cable	Avier	K48GHS	---	---
(8)	USB Type-C to 4K DisplayPort	j5create	JCA141	---	---
(9)	Monitor	ASUS	MX27U	---	---

3.4. Test Instruments

Conducted Emission
Test Period: Oct. 03, 2021
Testing Engineer: Louis Shen

Use	Equipment	Manufacturer	Model Number	Serial Number	Cal. Date	Cal. Period
☒	Test Receiver	R&S	ESCI	100367	05/21/2021	1 year
☐	Test Receiver	R&S	ESCI	100722	10/28/2020	1 year
☐	Test Receiver	R&S	ESCI	101000	11/27/2020	1 year
☒	LISN	R&S	ENV216	101040	03/29/2021	1 year
☒	LISN	R&S	ENV216	101041	04/08/2021	1 year
☒	RF Cable	Woken	00100D1380194M	TE-02-03	05/28/2021	1 year

Conducted
Test Period: Sep. 30, 2021
Testing Engineer: John Chen

Use	Equipment	Manufacturer	Model Number	Serial Number	Cal. Date	Cal. Period
☐	Power Sensor	Anritsu	MA2411B	1126022	09/03/2021	1 year
☐	Power Meter	Anritsu	ML2495A	1135009	09/03/2021	1 year
☐	Power Sensor	Agilent	N1921A	MY45241957	12/09/2020	1 year
☐	Power Meter	Agilent	N1911A	MY45101619	12/09/2020	1 year
☐	Spectrum Analyzer (10 Hz~26.5 GHz)	KEYSIGHT	N9010B	MY59071418	03/17/2021	1 year
☐	Spectrum Analyzer (9 kHz~26.5 GHz)	Agilent	N9010A	MY48030518	07/23/2021	1 year
☐	Spectrum Analyzer (20 Hz~26.5 GHz)	Agilent	N9020A	US47520902	09/09/2021	1 year
☒	Spectrum Analyzer (3 Hz~50 GHz)	Agilent	N9030A	MY53120541	01/08/2021	1 year
☒	Temperature & Humidity Chamber	TAICHY	MHU-225LA	980729	03/30/2021	1 year
☐	Signal Generator	KEYSIGHT	N5182B	MY53052569	04/20/2021	1 year
☐	Signal Generator	KEYSIGHT	N5182BX07	MY59360221	04/20/2021	1 year
☐	Bluetooth Tester	R&S	CBT	100350	03/17/2021	2 years
☐	Wireless Connectivity Tester	R&S	CMW270	102208	06/02/2021	1 year
☐	Power Supply	KEITHLEY	2303	4045290	02/01/2021	1 year
☐	RF Communication Test Set	HP	8920A	3344A03297	08/10/2021	1 year
☒	Digital Power Analyzer	IDRC	CP-268	268710	11/24/2021	1 year

Note: N.C.R. = No Calibration Request.

Radiated Emissions
Test Period: Spe. 27, 2021
Testing Engineer: Hung Chou

Radiation test sites		Semi Anechoic Room				
Use	Equipment	Manufacturer	Model Number	Serial Number	Cal. Date	Cal. Period
☐	Spectrum Analyzer (10 Hz~44 GHz)	KEYSIGHT	N9010A	MY52221312	01/18/2021	1 year
☐	Spectrum Analyzer (3 Hz~50 GHz)	Agilent	N9030A	MY53120541	01/08/2021	1 year
☒	Spectrum Analyzer (2 Hz~50 GHz)	Keysight	N9030B	MY57143537	04/19/2021	1 year
☒	Amplifier (100 kHz~1.3 GHz)	Agilent	8447D	2944A11119	01/15/2021	1 year
☐	Amplifier (100 kHz~1.3 GHz)	Agilent	8447D	2944A10961	07/06/2021	1 year
☐	Broadband Amplifier (100 kHz~1 GHz)	Titan	T0910E00014330A1F	001	07/23/2021	1 year
☐	Amplifier (1 GHz~26.5 GHz)	Agilent	8449B	3008A02237	10/21/2020	1 year
☐	Broadband Amplifier (1 GHz~26.5 GHz)	Titan	T0912E01263025A1F	002	07/26/2021	1 year
☐	Preamplifier (26.5 GHz~40 GHz)	EMCI	EMC2654045	980028	08/19/2021	1 year
☒	Loop Antenna (9 kHz~30 MHz)	COM-POWER CORPORATION	AL-130	121014	04/07/2021	1 year
☒	Trilog Broadband Antenna (30 kHz~1 GHz)	Schwarzbeck Mess-Elektronik	VULB9168	01146	07/19/2021	1 year
☐	Trilog Broadband Antenna (30 kHz~1 GHz)	Schwarzbeck Mess-Elektronik	VULB9168	416	11/11/2020	1 year
☐	Broadband Horn Antenna (1 GHz~18 GHz)	Schwarzbeck Mess-Elektronik	9120D	02207	07/09/2021	1 year
☐	Broadband Horn Antenna (1 GHz~18 GHz)	Schwarzbeck Mess-Elektronik	9120D	9120D-550	08/24/2021	1 year
☐	Broadband Horn Antenna (18 GHz~40 GHz)	Schwarzbeck Mess-Elektronik	9170	9170-320	08/24/2021	1 year
☐	Horn Antenna (18 GHz~40 GHz)	ETS	3116	00086467	12/03/2020	1 year
☒	RF Cable	EMCI	EMC104-N-N-6000	TE01-1	02/19/2021	1 year
☐	Microwave Cable	EMCI	EMC104-SM-SM-13000	170814	02/19/2021	1 year
☐	Microwave Cable	EMCI	EMC102-KM-KM-14000	151001	02/19/2021	1 year
☐	Coaxial Cable	Titan	T0710AT327A10A100	J11005	08/06/2021	1 year
☒	Coaxial Cable	Titan	T0710AT327A10A900	J11004	08/06/2021	1 year
☒	Coaxial Cable	Titan	CFD400NL-LW	001	08/06/2021	1 year
☐	Bluetooth Tester	R&S	CBT	100350	03/17/2021	2 years
☐	Wireless Connectivity Tester	R&S	CMW270	102208	06/02/2021	1 year
☐	Power Supply	KEITHLEY	2303	4045290	02/01/2021	1 year

Note: N.C.R. = No Calibration Request.

3.5. Test Site Environment

Items	Required (IEC 60068-1)	Actual
Temperature (°C)	15-35	20-30
Humidity (%RH)	25-75	45-75

4 Measurement Procedure

4.1. AC Power Line Conducted Emission Measurement

■ **Limit**

Frequency (MHz)	Quasi-peak	Average
0.15 - 0.5	66 to 56	56 to 46
0.50 - 5.0	56	46
5.0 - 30.0	60	50

■ **Test Setup**

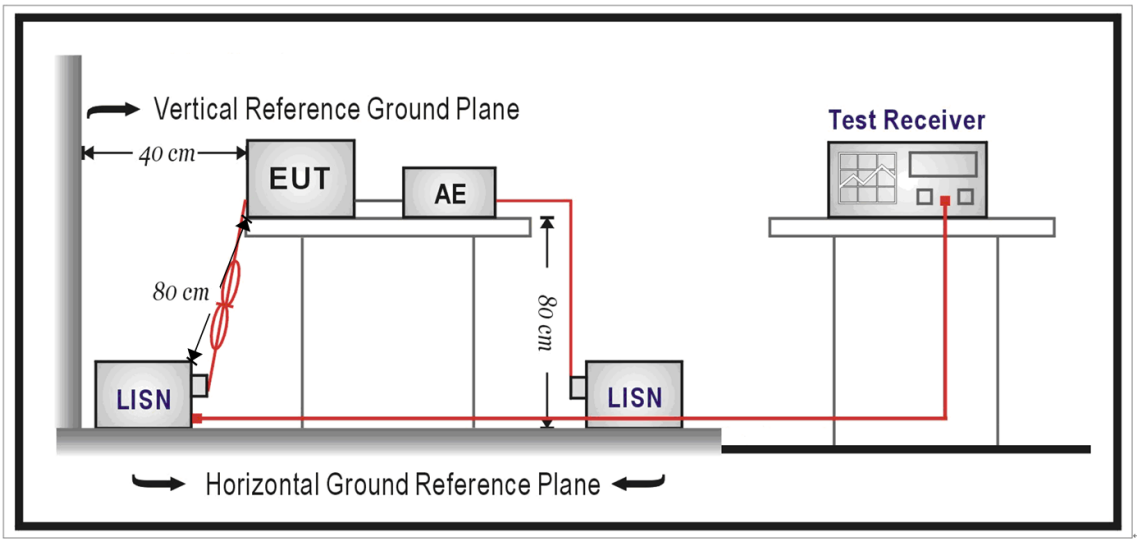

■ **Test Procedure**

The EUT and simulators are connected to the main power through a line impedance stabilization network (L.I.S.N.). This provides a 50 Ω// 50 uH coupling impedance for the measuring equipment. The peripheral devices are also connected to the main power through a LISN that provides a 50 Ω// 50 uH coupling impedance with 50 ohm termination.

Tabletop device shall be placed on a non-conducting platform, of nominal size 1 m by 1.5 m, raised 80 cm above the reference ground plane. The wall of screened room shall be located 40 cm to the rear of the EUT. Other surfaces of tabletop or floor standing EUT shall be at least 80 cm from any other ground conducting surface including one or more LISNs. For floor-standing device shall be placed under the EUT with a 12 mm insulating material.

Conducted emissions were investigated over the frequency range from 0.15 MHz to 30 MHz using a resolution bandwidth of 9 kHz. The equipment under test (EUT) shall be meet the limits in section 4.1, as applicable, including the average limit and the quasi-peak limit when using respectively, an average detector and quasi-peak detector measured in accordance with the methods described of related standard. When all of peak value were complied with quasi-peak and average limit from 150 kHz to 30 MHz then quasi-peak and average measurement was unnecessary.

The AMN shall be placed 0.8 m from the boundary of the unit under test and bonded to a ground reference plane for AMNs mounted on top of the ground reference plane. This distance is between the closest points of the AMN and the EUT. All other units of the EUT and associated equipment shall be at least 0.8 m from the AMN. If the mains power cable is longer than 1 m then the cable shall be folded back and forth at the centre of the lead to form a bundle no longer than 0.4 m. All of interconnecting cables that hang closer than 40 cm to the ground plane shall be folded back and forth in the center forming a bundle 30 cm to 40 cm long. All of EUT and AE shall be separate place more than 0.1 m. All 50 Ω ports of the LISN shall be resistively terminated into 50 Ω loads when not connected to the measuring instrument.

If the reading of the measuring receiver shows fluctuations close to the limit, the reading shall be observed for at least 15 s at each measurement frequency; the higher reading shall be recorded with the exception of any brief isolated high reading which shall be ignored.

4.2. Radiated Emission Measurement

■ **Limit**

According to §15.225,

(a) The field strength of any emissions within the band 13.553 – 13.567 MHz shall not exceed 15,848 microvolt / meter at 30 meters.

(b) Within the bands 13.410 – 13.553 MHz and 13.567 -13.710 MHz, the field strength of any emissions shall not exceed 334 microvolt / meter at 30 meters.

(c) Within the bands 13.110 – 13.410 MHz and 13.710 – 14.010 MHz the field strength of any emissions shall not exceed 106 microvolt / meter at 30 meters.

(d) The field strength of any emissions appearing outside of the 13.110 – 14.010 MHz and shall not exceed the general radiated emission limits in §15.209.

According to §15.225(a), except as provided elsewhere in this Subpart, the emissions from an intentional radiator shall not exceed the field strength levels specified in the following table:

Frequency (MHz)	Field Strength (µV/m at meter)	Measurement Distance (meter)
0.009 – 0.490	2400 / F (kHz)	300
0.490 – 1.705	24000 / F (kHz)	30
1.705 – 30.0	30	30
30 - 88	100**	3
88-216	150**	3
216-960	200**	3
Above 960	500	3

** Except as provided in paragraph (g), fundamental emissions from intentional radiators operating under this Section shall not be located in the frequency bands 54-72 MHz, 76-88 MHz, 174-216 MHz or 470-806 MHz. However, operation within these frequency bands is permitted under other sections of this Part, e.g., Sections 15.231 and 15.241.

■ **Setup**

9 kHz ~ 30 MHz

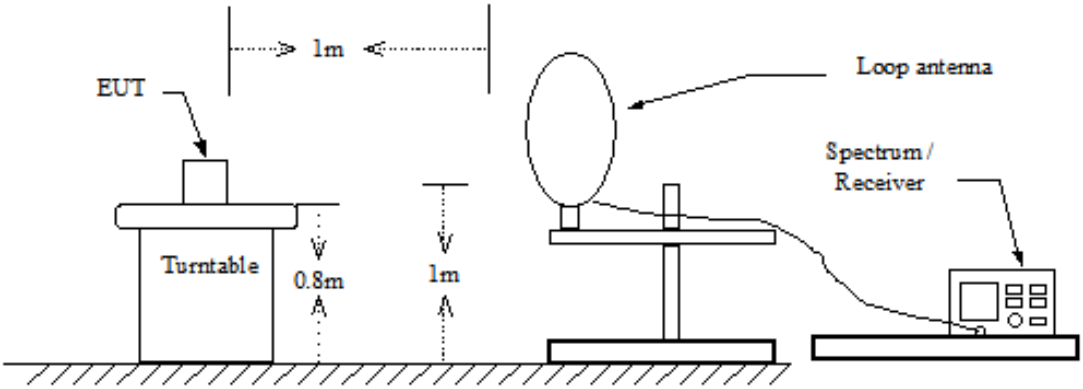

30 MHz ~ 1 GHz

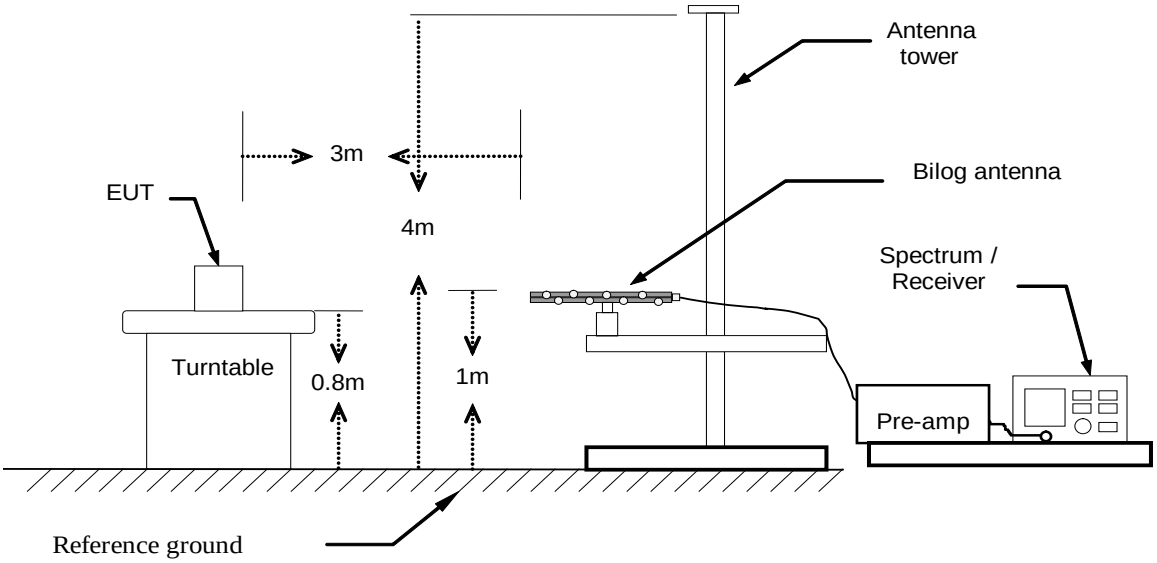

■ **Test Procedure**

Final radiation measurements were made on a three-meter Semi Anechoic Chamber. The EUT system was placed on a nonconductive turntable which is 0.8 meters height, top surface 1.0 x 1.5 meter. The spectrum was examined from 3 Hz to 44 GHz in order to cover the whole spectrum below 10th harmonic which could generate from the EUT. During the test, EUT was set to transmit continuously.

For measurements below 1 GHz the resolution bandwidth is set to 100 kHz for peak detection measurements or 120 kHz for quasi-peak detection measurements. Peak detection is used unless otherwise noted as quasi-peak.

For measurements above 1 GHz the resolution bandwidth is set to 1 MHz, and then the video bandwidth is set to 3 MHz for peak measurements and 10 Hz for average measurements.

A nonconductive material surrounded the EUT to supporting the EUT for standing on tree orthogonal planes. At each condition, the EUT was rotated 360 degrees, and the antenna was raised and lowered from one to four meters to find the maximum emission levels. Measurements were taken using both horizontal and vertical antenna polarization.

Broadband/Horn Antenna were used in frequency 30 MHz to 18 GHz at a distance of 3 meter. Loop/Horn Antenna was used in frequency 9 kHz to 30 MHz and 18 to 26.5 GHz at a distance of 1 meter. All test results were extrapolated to equivalent signal at 3 meters utilizing an inverse linear distance extrapolation Factor (20 dB/decade).

For testing above 1 GHz, the emission level of the EUT in peak mode was 20 dB lower than average limit (that means the emission level in peak mode also complies with the limit in average mode), then testing will be stopped and peak values of EUT will be reported, otherwise, the emissions will be measured in average mode again and reported.

Appropriate preamplifiers were used for improving sensitivity and precautions were taken to avoid overloading or desensitizing the spectrum analyzer. No post – detector video filters were used in the test.

The spectrum analyzer's 6 dB bandwidth was set to 1 MHz, and the analyzer was operated in the peak detection mode, for frequencies both below and up 1 GHz. The average levels were obtained by subtracting the duty cycle correction factor from the peak readings.

The following procedures were used to convert the emission levels measured in decibels referenced to 1 microvolt (dBuV) into field intensity in microvolt pre-meter (uV/m).

The actual field intensity in decibels referenced to 1 microvolt in to field intensity in microvolt per-meter (dBuV/m).

The actual field is intensity in referenced to 1 microvolt per meter (dBuV/m) is determined by algebraically adding the measured reading in dBuV, the antenna factor (dB), and cable loss (dB) and Subtracting the gain of preamplifier (dB) is auto calculate in spectrum analyzer.

(1) Amplitude (dBuV/m) = FI (dBuV) +AF (dBuV) +CL (dBuV)-Gain (dB)
FI= Reading of the field intensity.
AF= Antenna factor.
CL= Cable loss.
P.S Amplitude is auto calculate in spectrum analyzer.

(2) Actual Amplitude (dBuV/m) = Amplitude (dBuV)-Dis(dB)
The FCC specified emission limits were calculated according the EUT operating frequency and by following linear interpolation equations:
(a) For fundamental frequency : Transmitter Output < +30 dBm
(b) For spurious frequency : Spurious emission limits = fundamental emission limit /10

Data of measurement within this frequency range without mark in the table above means the reading of emissions are attenuated more than 20 dB below the permissible limits or the field strength is too small to be measured.

4.3. Frequency Stability Measurement

■ **Limit**

According to §15.207(e), the frequency tolerance of the carrier signal shall be maintained within +/- 0.01 % of the operating frequency over a temperature variation of –20 degrees to +50 degrees C at normal supply voltage, and for a variation in the primary supply voltage from 85 % to 115 % of the rated supply voltage at a temperature of 20 degrees C. For battery operated equipment, the equipment tests shall be performed using a new battery.

■ **Test Setup**

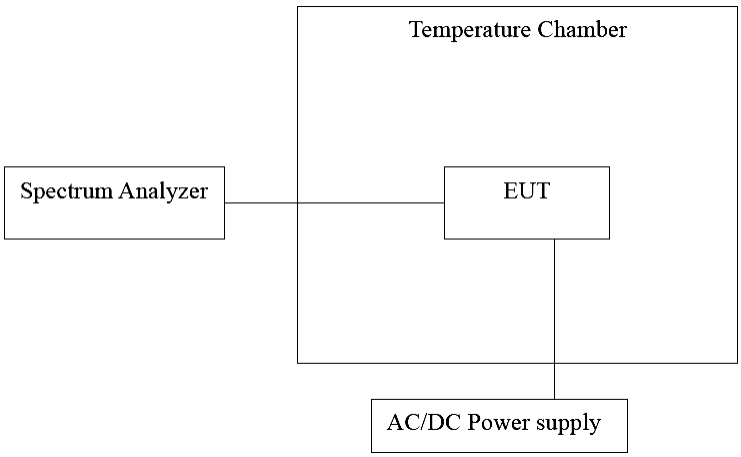

■ **Test Procedure**

1. Place the EUT on the table and set it in the transmitting mode.
2. Remove the antenna from the EUT and then connect a low loss RF cable from the antenna port to the spectrum analyzer.
3. Set the environment into appropriate environment.
4. Set the spectrum analyzer as RBW = 1 kHz, VBW = RBW, Span = 200 kHz, Sweep = auto.
5. Mark the peak frequency and measure the frequency tolerance using frequency counter function.
6. Repeat until all the results are investigated.

4.4. 20 dB Bandwidth Measurement

■ **Limit**

N/A

■ **Test Setup**

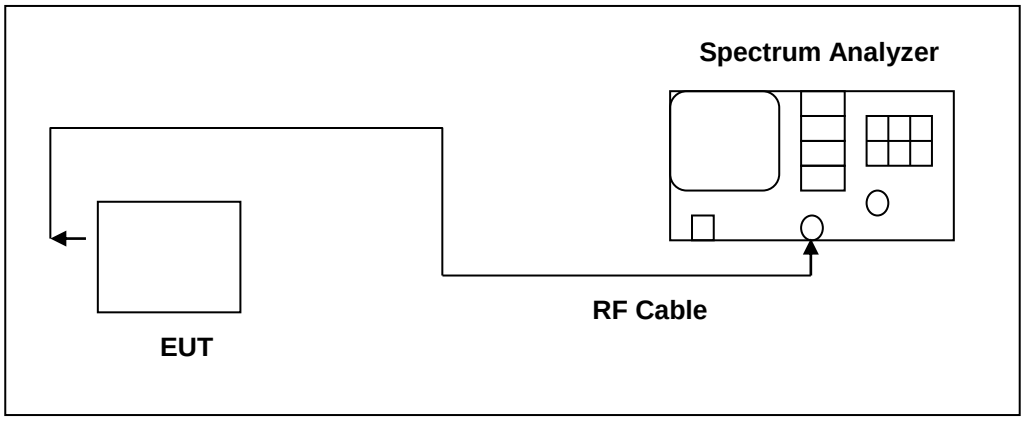

■ **Test Procedure**

Connect RF output port to the input of the spectrum analyzer. Connect the DUT to appropriate power supply. Turn RFID function of DUT on.

Analyzer used the following settings:

1. Span = 60 kHz
2. RBW ≥ 1 % of the 20 dB span
3. VBW ≥ RBW
4. Sweep = auto
5. Detector function = peak
6. Trace = max hold

The trace was allowed to stabilize. The EUT was transmitting at its maximum data rate. The marker-to-peak function was used to set the marker to the peak of the emission. The marker-delta function was used to measure 20 dB down one side of the emission. The marker-delta function and marker was moved to the other side of the emission until it was even with the reference marker. The marker-delta reading at this point was the 20 dB bandwidth of the emission.

4.5. Antenna Requirement

- **Require**

An intentional radiator shall be designed to ensure that no antenna other than that furnished by the responsible party shall be used with the device. The use of a permanently attached antenna or of an antenna that uses a unique coupling to the intentional radiator shall be considered sufficient to comply with the provisions of this section. The manufacturer may design the unit so that a broken antenna can be replaced by the user, but the use of a standard antenna jack or electrical connector is prohibited.

- **Antenna Connector Construction**

The antenna connector used in this product is internal antenna, cannot be replaced by the end-user.
See section 2 – antenna information.

5 Test Results

Annex A. Conducted Emission

Standard:	FCC Part 15.225	Line:	L1
Test item:	Conducted Emission	Power:	AC 120 V/60 Hz
Mode:	Mode 1		
Description:			

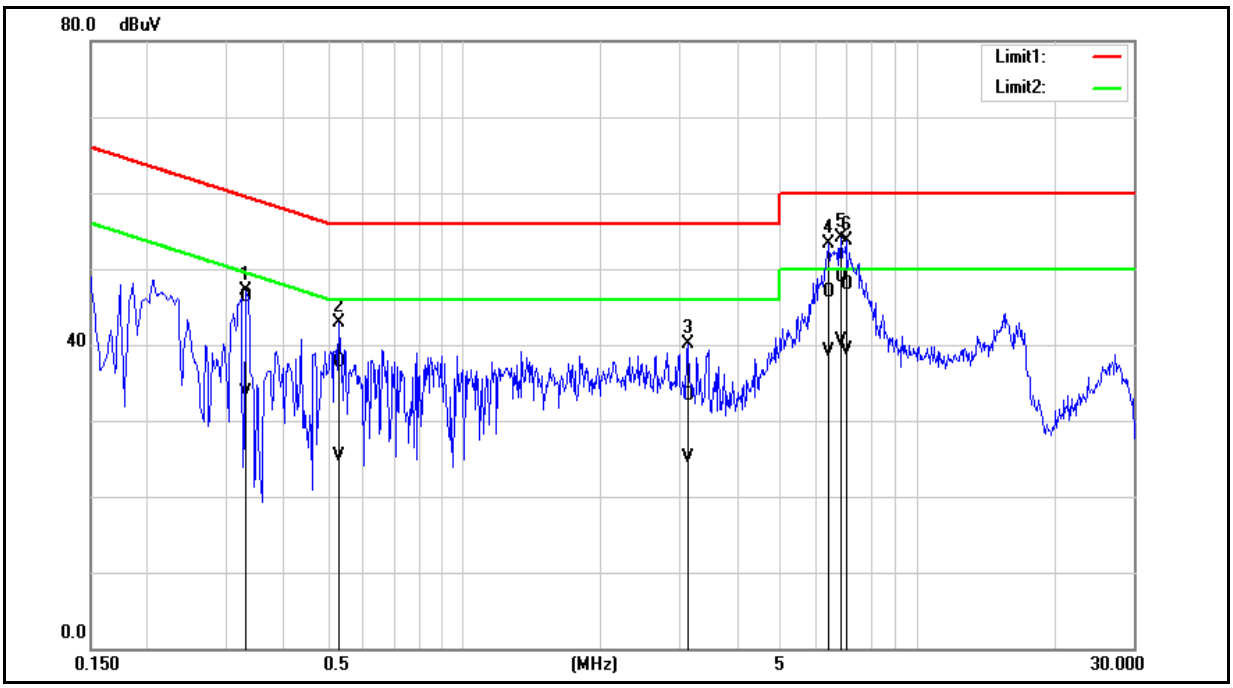

No.	Frequency (MHz)	QP reading (dBuV)	AVG reading (dBuV)	Correction factor (dB)	QP result (dBuV)	AVG result (dBuV)	QP limit (dBuV)	AVG limit (dBuV)	QP margin (dB)	AVG margin (dB)	Remark
1	0.3300	36.57	24.07	9.73	46.30	33.80	59.45	49.45	-13.15	-15.65	Pass
2	0.5300	28.01	15.57	9.74	37.75	25.31	56.00	46.00	-18.25	-20.69	Pass
3	3.1180	23.57	15.25	9.83	33.40	25.08	56.00	46.00	-22.60	-20.92	Pass
4	6.3580	36.94	29.15	9.89	46.83	39.04	60.00	50.00	-13.17	-10.96	Pass
5	6.7820	39.01	30.65	9.91	48.92	40.56	60.00	50.00	-11.08	-9.44	Pass
6	6.9540	38.03	29.38	9.91	47.94	39.29	60.00	50.00	-12.06	-10.71	Pass

Note: 1. Result (dBuV) = Correction factor (dB) + Reading(dBuV).

2. Correction factor (dB) = Cable loss (dB) + L.I.S.N. factor (dB).

Standard:	FCC Part 15.225	Line:	N
Test item:	Conducted Emission	Power:	AC 120 V/60 Hz
Mode:	Mode 1		
Description:			

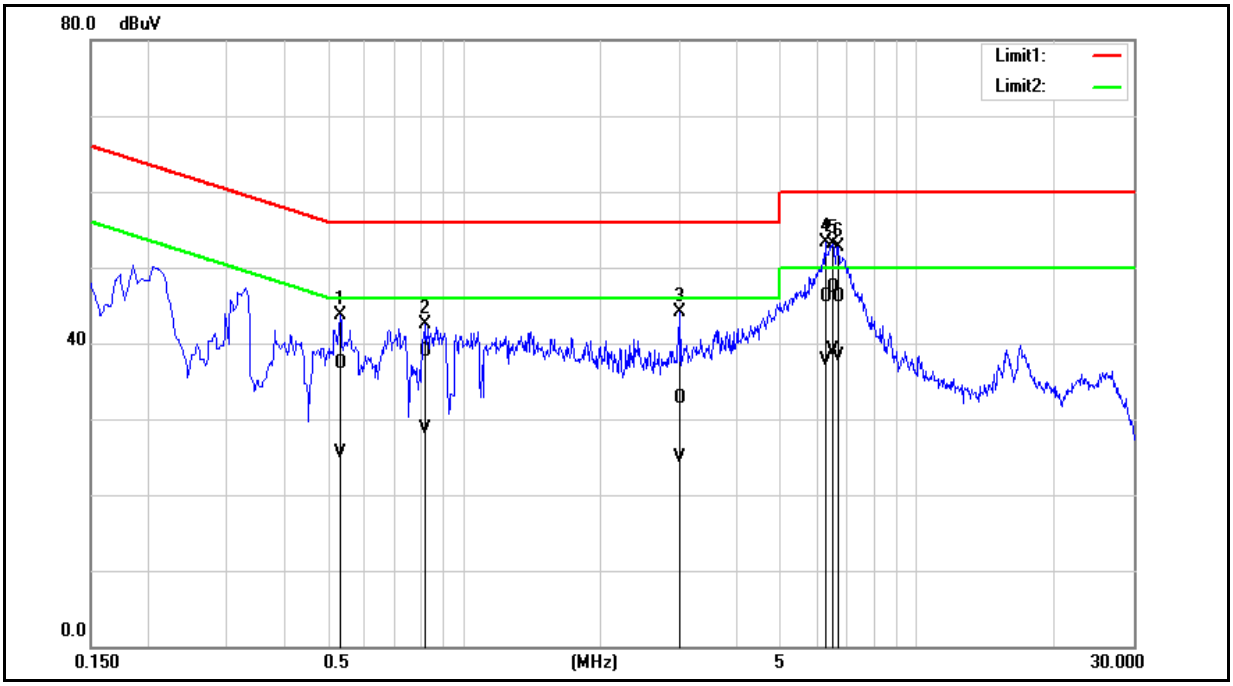

No.	Frequency (MHz)	QP reading (dBuV)	AVG reading (dBuV)	Correction factor (dB)	QP result (dBuV)	AVG result (dBuV)	QP limit (dBuV)	AVG limit (dBuV)	QP margin (dB)	AVG margin (dB)	Remark
1	0.5340	27.50	15.79	9.73	37.23	25.52	56.00	46.00	-18.77	-20.48	Pass
2	0.8180	29.17	18.98	9.75	38.92	28.73	56.00	46.00	-17.08	-17.27	Pass
3	2.9940	22.78	15.04	9.83	32.61	24.87	56.00	46.00	-23.39	-21.13	Pass
4	6.2700	36.22	27.82	9.91	46.13	37.73	60.00	50.00	-13.87	-12.27	Pass
5	6.5140	37.33	29.17	9.92	47.25	39.09	60.00	50.00	-12.75	-10.91	Pass
6	6.7060	36.25	28.34	9.92	46.17	38.26	60.00	50.00	-13.83	-11.74	Pass

Note: 1. Result (dBuV) = Correction factor (dB) + Reading(dBuV).

2. Correction factor (dB) = Cable loss (dB) + L.I.S.N. factor (dB).

Annex B. Conducted Test Results

Frequency Stability Measurement

Temperature Variations

Test Mode	Mode 2						
Temp. (°C)	Voltage (VAC)	0 minute Frequency Tolerance (%)	2 minutes Frequency Tolerance (%)	5 minutes Frequency Tolerance (%)	10 minutes Frequency Tolerance (%)	Limit (%)	Result (Pass/Fail)
-20	V_{Nom}	-0.0009	-0.0053	-0.0046	-0.0009	±0.01	Pass
-10	V_{Nom}	-0.0009	-0.0038	0.0013	-0.0009	±0.01	Pass
0	V_{Nom}	-0.0013	0.0031	-0.0050	-0.0050	±0.01	Pass
10	V_{Nom}	-0.0007	0.0001	-0.0029	-0.0051	±0.01	Pass
20	V_{Nom}	-0.0004	0.0018	0.0025	-0.0027	±0.01	Pass
30	V_{Nom}	-0.0002	-0.0046	-0.0002	-0.0032	±0.01	Pass
40	V_{Nom}	-0.0016	-0.0041	-0.0009	-0.0001	±0.01	Pass
50	V_{Nom}	-0.0009	-0.0001	0.0013	0.0028	±0.01	Pass

Voltage Variations

Test Mode	Mode 2						
Temp. (°C)	Voltage (VAC)	0 minute Frequency Tolerance (%)	2 minutes Frequency Tolerance (%)	5 minutes Frequency Tolerance (%)	10 minutes Frequency Tolerance (%)	Limit (%)	Result (Pass/Fail)
20	V_{Low}	0.0002	-0.0021	0.0007	-0.0010	±0.01	Pass
	V_{Nom}	-0.0004	-0.0002	-0.0005	-0.0007	±0.01	Pass
	V_{High}	0.0006	0.0014	0.0013	-0.0015	±0.01	Pass

Note: $V_{Low}=V_{Nom}-15$ % ; $V_{High}=V_{Nom}+15$ %

20 dB Bandwidth Measurement

Test Mode	Mode 2
Frequency (MHz)	20 dB Bandwidth (kHz)
13.56	82.72

■ Test Graphs

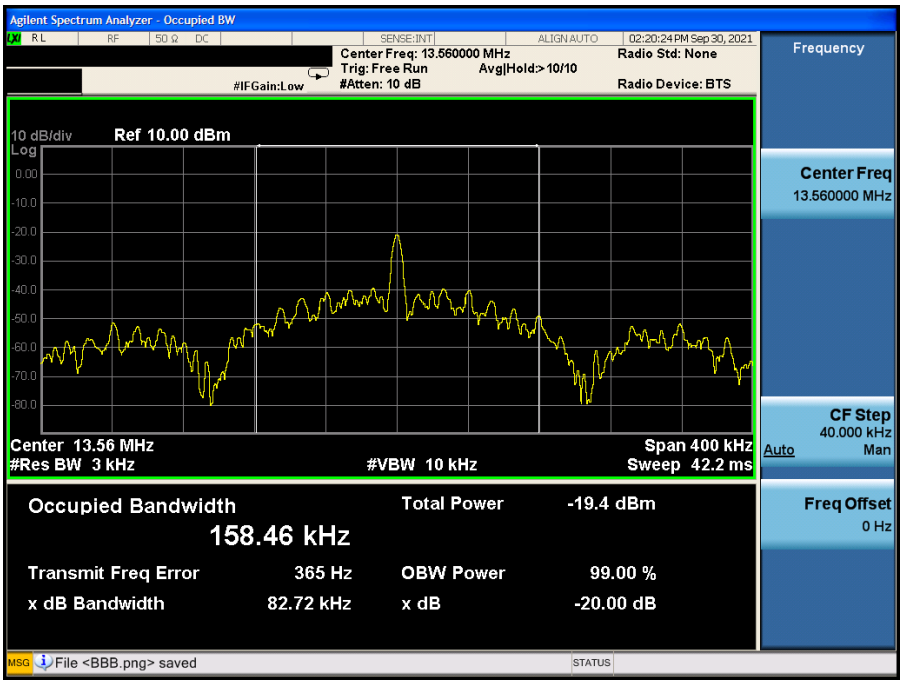

Annex C. Radiated Emission Measurement

Fundamental

Standard:	FCC Part 15.225	Test Distance:	1 m
Test item:	Fundamental		
Mode:	Mode 2		
Ant.Polar.:	Horizontal		

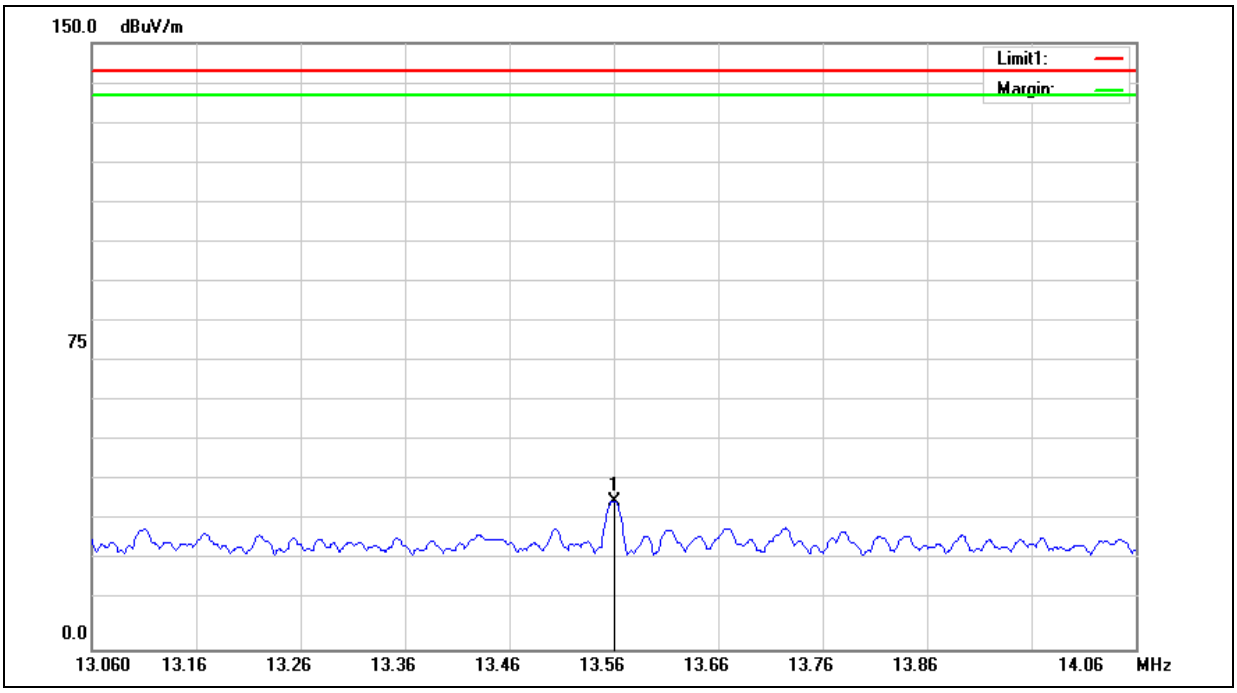

No.	Frequency (MHz)	Reading (dBuV)	Correct Factor (dB/m)	Near-Field Result (dBuV/m)	Derived Value (dBuV/m)	Limit (dBuV/m)	Margin (dB)	Remark
1	13.5600	21.32	15.40	36.72	-3.75	84.00	-87.75	peak

Note: The level is measured at 1 meter and is converted into result at 30 meter.

The converted formula listed below:

Measure result (1 meter distance): a

Compute result (30 meter distance): A

$d_{near\ field} = \lambda/2\pi$，$d_{measure}$ = 1 meter distance

$A = a - 40*\log(d_{near\ field}/d_{measure}) - 20*\log(d_{limit}/d_{near\ field})$

ex. a = 36.72 dBuV/m, A=36.72 - 40*log(3.52 /1) - 20*log(30 /3.52) dBuV/m = -3.75 dBuV/m

Standard:	FCC Part 15.225	Test Distance:	1 m
Test item:	Fundamental		
Mode:	Mode 2		
Ant.Polar.:	Vertical		

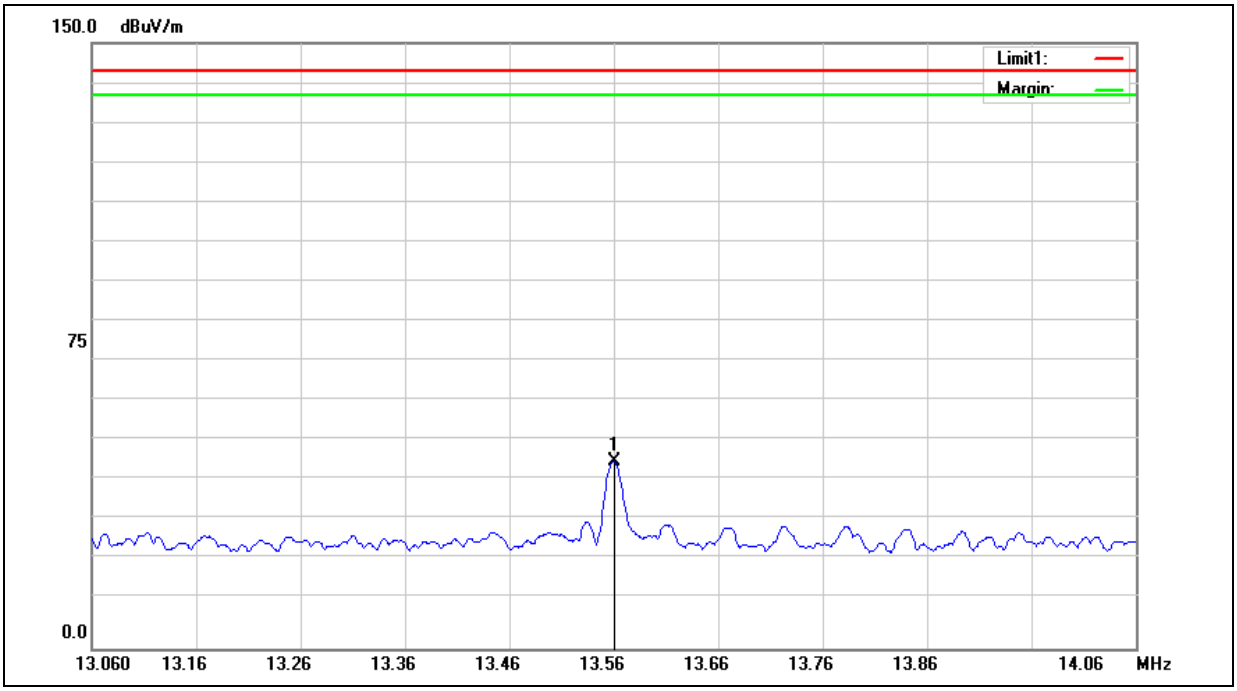

No.	Frequency (MHz)	Reading (dBuV)	Correct Factor (dB/m)	Near-Field Result (dBuV/m)	Derived Value (dBuV/m)	Limit (dBuV/m)	Margin (dB)	Remark
1	13.5600	30.82	15.40	46.22	5.75	84.00	-78.25	peak

Note: The level is measured at 1 meter and is converted into result at 30 meter.

Harmonic

9 kHz ~ 30 MHz:

Standard:	FCC Part 15.225	Test Distance:	300/30 m
Test item:	Harmonic		
Mode:	Mode 2		
Ant.Polar.:	Horizontal		

No.	Frequency (MHz)	Reading (dBuV)	Correct Factor (dB/m)	Near-Field Result (dBuV/m)	Derived Value (dBuV/m)	Limit (dBuV/m)	Margin (dB)	Remark
1	0.6388	43.23	13.75	56.98	-10.03	31.50	-41.53	QP
2	0.8487	39.65	13.88	53.53	-11.02	29.03	-40.05	QP
3	1.5085	34.13	14.04	48.17	-11.38	24.03	-35.41	QP
4	2.0183	31.51	14.11	45.62	-11.40	29.54	-40.95	QP
5	2.5282	30.75	14.20	44.95	-10.12	29.54	-39.66	QP
6	3.7578	30.04	14.41	44.45	-7.18	29.54	-36.72	QP

Note: The level is measured at 1 meter and is converted into result at 300 or 30 meter.

Standard:	FCC Part 15.225	Test Distance:	300/30 m
Test item:	Harmonic		
Mode:	Mode 2		
Ant.Polar.:	Vertical		

No.	Frequency (MHz)	Reading (dBuV)	Correct Factor (dB/m)	Near-Field Result (dBuV/m)	Derived Value (dBuV/m)	Limit (dBuV/m)	Margin (dB)	Remark
1	0.5788	51.60	13.72	65.32	-2.55	32.35	-34.90	QP
2	1.2086	41.70	14.00	55.70	-5.78	25.96	-31.74	QP
3	1.8085	35.27	14.08	49.35	-8.62	29.54	-38.17	QP
4	2.3783	37.37	14.18	51.55	-4.05	29.54	-33.59	QP
5	3.0381	31.99	14.30	46.29	-7.18	29.54	-36.72	QP
6	3.6380	30.76	14.40	45.16	-6.74	29.54	-36.28	QP

Note: The level is measured at 1 meter and is converted into result at 300 or 30 meter.

30 MHz ~ 1 GHz:

Standard:	FCC Part 15.225	Test Distance:	3 m
Test item:	Harmonic		
Mode:	Mode 2		
Ant.Polar.:	Horizontal		

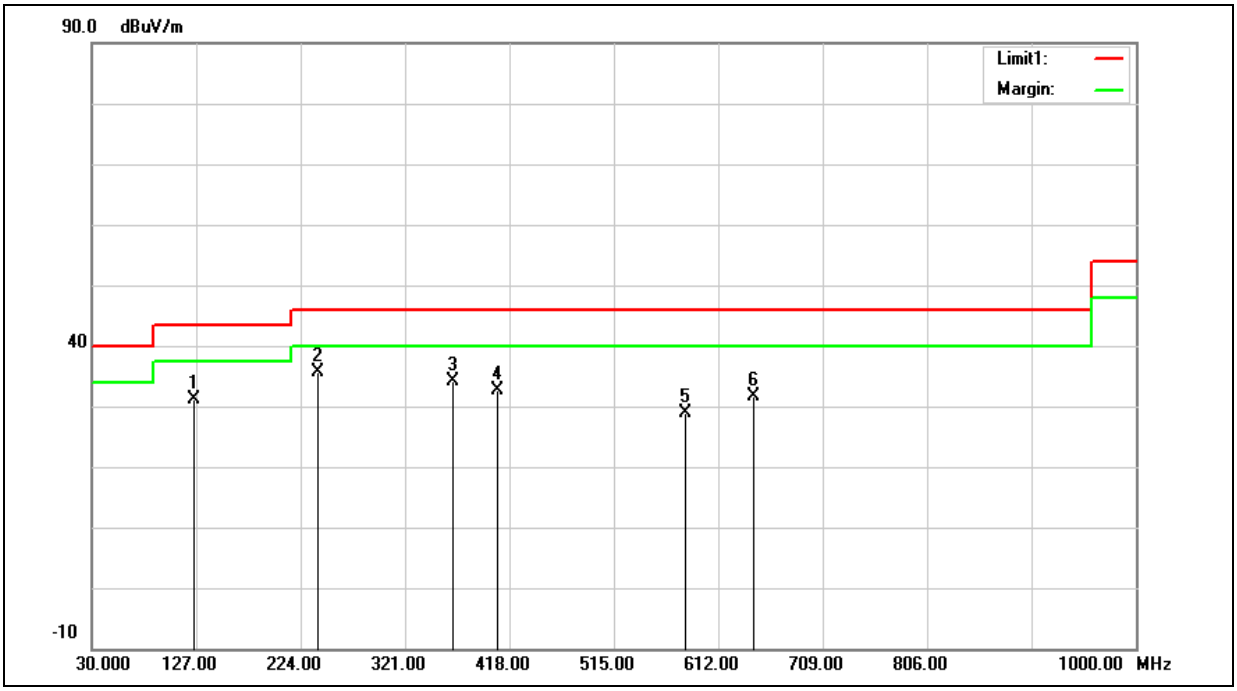

No.	Frequency (MHz)	Reading (dBuV)	Correct Factor (dB/m)	Result (dBuV/m)	Limit (dBuV/m)	Margin (dB)	Remark
1	125.0600	40.04	-8.99	31.05	43.50	-12.45	QP
2	239.5200	43.01	-7.34	35.67	46.00	-10.33	QP
3	365.6200	38.40	-4.24	34.16	46.00	-11.84	QP
4	406.3600	35.80	-3.20	32.60	46.00	-13.40	QP
5	581.9300	28.84	0.04	28.88	46.00	-17.12	QP
6	644.9800	30.53	1.06	31.59	46.00	-14.41	QP

Standard:	FCC Part 15.225	Test Distance:	3 m
Test item:	Harmonic		
Mode:	Mode 2		
Ant.Polar.:	Vertical		

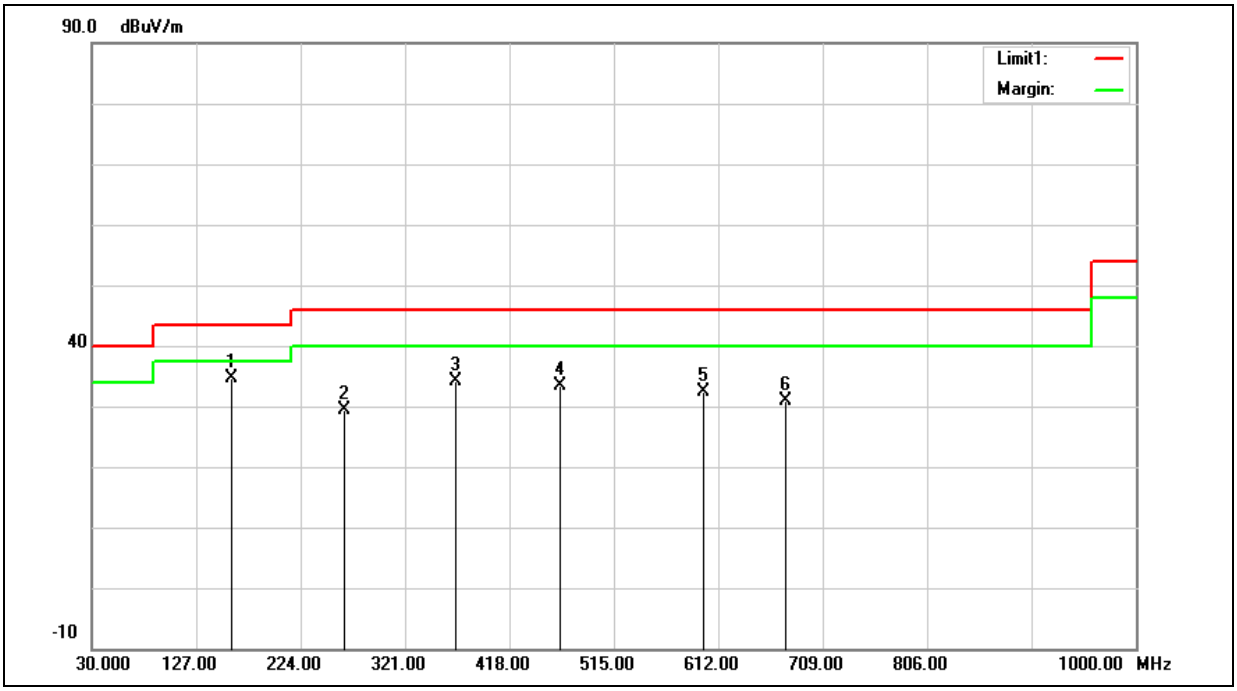

No.	Frequency (MHz)	Reading (dBuV)	Correct Factor (dB/m)	Result (dBuV/m)	Limit (dBuV/m)	Margin (dB)	Remark
1	159.9800	41.03	-6.42	34.61	43.50	-8.89	QP
2	264.7400	35.98	-6.53	29.45	46.00	-16.55	QP
3	368.5300	38.18	-4.16	34.02	46.00	-11.98	QP
4	464.5600	35.83	-2.35	33.48	46.00	-12.52	QP
5	598.4200	31.79	0.50	32.29	46.00	-13.71	QP
6	674.0800	29.26	1.66	30.92	46.00	-15.08	QP

---END---