ELECTROMAGNETIC EMISSIONS COMPLIANCE REPORT

Applicant:	ASUSTeK COMPUTER INC. 1F.No.15.Lide Rd.Beitou Dist. Taipei City 112.taiwan
Product Name:	ASUS Phone (Mobile Phone)
Brand Name:	ASUS
Model No.:	ASUS_I006D
Model Difference:	N/A
Report Number:	ER/2021/20009
FCC ID	MSQI006D
IC:	3568A-I006D
FCC Rule Part	Part 15.225
IC Rule:	RSS-210 issue 10 Annex B B.6 Dec. 2019
Issue Date:	April 9, 2021
Date of Test:	January 26, 2021 - April 6, 2021
Date of EUT Received:	January 26, 2021

We hereby certify that:

The above equipment was tested by SGS Taiwan Ltd. Central RF Lab .The test data, data evaluation, test procedures, and equipment configurations shown in this report were made in accordance with the procedures given in ANSI C63.10:2013 and the energy emitted by the sample EUT tested as described in this report is in compliance with conducted and radiated emission limits.

The test results of this report relate only to the tested sample identified in this report.

Approved By: _____

Blue Yang / Asst. Manager

Unless otherwise stated the results shown in this test report refer only to the sample(s) tested and such sample(s) are retained for 90 days only.
除非另有說明，此報告結果僅對測試之樣品負責，同時此樣品僅保留90天。本報告未經本公司書面許可，不可部份複製。
This document is issued by the Company subject to its General Conditions of Service printed overleaf, available on request or accessible at http://www.sgs.com.tw/Terms-and-Conditions and for electronic format documents, subject to Terms and Conditions for Electronic Documents at http://www.sgs.com.tw/Terms-and-Conditions. Attention is drawn to the limitation of liability, indemnification and jurisdiction issues defined therein. Any holder of this document is advised that information contained hereon reflects the Company's findings at the time of its intervention only and within the limits of Client's instructions, if any. The Company's sole responsibility is to its Client and this document does not exonerate parties to a transaction from exercising all their rights and obligations under the transaction documents. This document cannot be reproduced except in full, without prior written approval of the Company. Any unauthorized alteration, forgery or falsification of the content or appearance of this document is unlawful and offenders may be prosecuted to the fullest extent of the law.

Revision History

Report Number	Revision	Description	Issue Date	Revised By
ER/2021/20009	Rev.00	Original.	April 9, 2021	Viola Su

Note:

1、 Disclaimer
Antenna information is provided by the applicant, test results of this report are applicable to the sample EUT received.

Unless otherwise stated the results shown in this test report refer only to the sample(s) tested and such sample(s) are retained for 90 days only.
除非另有說明，此報告結果僅對測試之樣品負責，同時此樣品僅保留90天。本報告未經本公司書面許可，不可部份複製。
This document is issued by the Company subject to its General Conditions of Service printed overleaf, available on request or accessible at http://www.sgs.com.tw/Terms-and-Conditions and for electronic format documents, subject to Terms and Conditions for Electronic Documents at http://www.sgs.com.tw/Terms-and-Conditions. Attention is drawn to the limitation of liability, indemnification and jurisdiction issues defined therein. Any holder of this document is advised that information contained hereon reflects the Company's findings at the time of its intervention only and within the limits of Client's instructions, if any. The Company's sole responsibility is to its Client and this document does not exonerate parties to a transaction from exercising all their rights and obligations under the transaction documents. This document cannot be reproduced except in full, without prior written approval of the Company. Any unauthorized alteration, forgery or falsification of the content or appearance of this document is unlawful and offenders may be prosecuted to the fullest extent of the law.

Table of Contents

1 GENERAL INFORMATION 4
2 SYSTEM TEST CONFIGURATION 7
3 SUMMARY OF TEST RESULTS 9
4 DESCRIPTION OF TEST MODES 10
5 MEASUREMENT UNCERTAINTY 11
6 CONDUCTED EMISSIONS TEST 12
7 RADIATED EMISSION TEST 16
8 FREQUENCY STABILITY 29
9 EMISSION BANDWIDTH MEASUREMENT 34
10 ANTENNA REQUIREMENT 37

Unless otherwise stated the results shown in this test report refer only to the sample(s) tested and such sample(s) are retained for 90 days only.
除非另有說明，此報告結果僅對測試之樣品負責，同時此樣品僅保留90天。本報告未經本公司書面許可，不可部份複製。
This document is issued by the Company subject to its General Conditions of Service printed overleaf, available on request or accessible at http://www.sgs.com.tw/Terms-and-Conditions and for electronic format documents, subject to Terms and Conditions for Electronic Documents at http://www.sgs.com.tw/Terms-and-Conditions. Attention is drawn to the limitation of liability, indemnification and jurisdiction issues defined therein. Any holder of this document is advised that information contained hereon reflects the Company's findings at the time of its intervention only and within the limits of Client's instructions, if any. The Company's sole responsibility is to its Client and this document does not exonerate parties to a transaction from exercising all their rights and obligations under the transaction documents. This document cannot be reproduced except in full, without prior written approval of the Company. Any unauthorized alteration, forgery or falsification of the content or appearance of this document is unlawful and offenders may be prosecuted to the fullest extent of the law.

1 GENERAL INFORMATION

1.1 Product Description

Product Name:	ASUS Phone (Mobile Phone)	
Brand Name:	ASUS	
Model No.:	ASUS_I006D	
Model Difference:	N/A	
Hardware Version:	V4	
Software Version:	Android 11	
EUT Series No.:	N/A	
Power Supply:	3.87Vdc from Rechargeable Li-polymer Battery or 5 / 9 / 12 / 15 / 20 Vdc from AC/DC Adapter	
	Battery	Model No: C11P2003 Brand: ASUS
	Adapter	Model No: A299-200150U-US Brand: ASUS

1.2 RF specification

Radio Technology:	NFC
Operating Frequency	13.56MHz
Transmit Power	< 123dBuV/m at 3m.
Number of Channels	1
Antenna Type	Loop Antenna
Modulation Type	ASK

Unless otherwise stated the results shown in this test report refer only to the sample(s) tested and such sample(s) are retained for 90 days only.
除非另有說明，此報告結果僅對測試之樣品負責，同時此樣品僅保留90天。本報告未經本公司書面許可，不可部份複製。
This document is issued by the Company subject to its General Conditions of Service printed overleaf, available on request or accessible at http://www.sgs.com.tw/Terms-and-Conditions and for electronic format documents, subject to Terms and Conditions for Electronic Documents at http://www.sgs.com.tw/Terms-and-Conditions. Attention is drawn to the limitation of liability, indemnification and jurisdiction issues defined therein. Any holder of this document is advised that information contained hereon reflects the Company's findings at the time of its intervention only and within the limits of Client's instructions, if any. The Company's sole responsibility is to its Client and this document does not exonerate parties to a transaction from exercising all their rights and obligations under the transaction documents. This document cannot be reproduced except in full, without prior written approval of the Company. Any unauthorized alteration, forgery or falsification of the content or appearance of this document is unlawful and offenders may be prosecuted to the fullest extent of the law.

1.3 Test Methodology

FCC Part 15, Subpart C §15.225

RSS-210 issue 10 Annex B B.6 Dec. 2019

RSS-Gen. issue 5, Amendment 1, March 2019

ANSI C63.10:2013.

1.4 Test Facility

Laboratory	Test Site Address	Test Site Name	FCC Designation number	IC CAB identifier
SGS Taiwan Ltd. Central RF Lab. (TAF code 3702)	No.134, Wu Kung Road, New Taipei Industrial Park, Wuku District, New Taipei City, Taiwan.	SAC 1	TW0027	TW3702
		SAC 3		
		Conduction 1		
		Conducted 1		
		Conducted 2		
		Conducted 3		
		Conducted 4		
		Conducted 5		
		Conducted 6		
	No.2, Keji 1st Rd., Guishan District, Taoyuan City, Taiwan 333	Conduction A	TW0028	
		SAC C		
		SAC D		
		SAC G		
		Conducted A		
		Conducted B		
		Conducted C		
		Conducted D		
		Conducted E		
		Conducted F		
		Conducted G		

Note: Test site name is remarked on the equipment list in each section of this report as an indication where measurements occurred in specific test site and address.

Unless otherwise stated the results shown in this test report refer only to the sample(s) tested and such sample(s) are retained for 90 days only.
除非另有說明，此報告結果僅對測試之樣品負責，同時此樣品僅保留90天。本報告未經本公司書面許可，不可部份複製。
This document is issued by the Company subject to its General Conditions of Service printed overleaf, available on request or accessible at http://www.sgs.com.tw/Terms-and-Conditions and for electronic format documents, subject to Terms and Conditions for Electronic Documents at http://www.sgs.com.tw/Terms-and-Conditions. Attention is drawn to the limitation of liability, indemnification and jurisdiction issues defined therein. Any holder of this document is advised that information contained hereon reflects the Company's findings at the time of its intervention only and within the limits of Client's instructions, if any. The Company's sole responsibility is to its Client and this document does not exonerate parties to a transaction from exercising all their rights and obligations under the transaction documents. This document cannot be reproduced except in full, without prior written approval of the Company. Any unauthorized alteration, forgery or falsification of the content or appearance of this document is unlawful and offenders may be prosecuted to the fullest extent of the law.

1.5 Special Accessories

There is no other accessory attached. This is the worst case condition.

1.6 Equipment Modifications

There was no modification incorporated into the EUT.

Unless otherwise stated the results shown in this test report refer only to the sample(s) tested and such sample(s) are retained for 90 days only.
除非另有說明，此報告結果僅對測試之樣品負責，同時此樣品僅保留90天。本報告未經本公司書面許可，不可部份複製。
This document is issued by the Company subject to its General Conditions of Service printed overleaf, available on request or accessible at http://www.sgs.com.tw/Terms-and-Conditions and for electronic format documents, subject to Terms and Conditions for Electronic Documents at http://www.sgs.com.tw/Terms-and-Conditions. Attention is drawn to the limitation of liability, indemnification and jurisdiction issues defined therein. Any holder of this document is advised that information contained hereon reflects the Company's findings at the time of its intervention only and within the limits of Client's instructions, if any. The Company's sole responsibility is to its Client and this document does not exonerate parties to a transaction from exercising all their rights and obligations under the transaction documents. This document cannot be reproduced except in full, without prior written approval of the Company. Any unauthorized alteration, forgery or falsification of the content or appearance of this document is unlawful and offenders may be prosecuted to the fullest extent of the law.

2 SYSTEM TEST CONFIGURATION

2.1 EUT Configuration

The EUT configuration for testing is installed on RF field strength measurement to meet the Commissions requirement and operating in a manner which intends to maximize its emission characteristics in a continuous normal application.

2.2 EUT Exercise

The Transmitter was operated in the normal operating mode. The Tx frequency was fixed which was for the purpose of the measurements.

2.3 Test Procedure

2.3.1 Conducted Emissions

The EUT is a placed on a table which is 0.8 m above ground plane. Conducted emissions from the EUT measured in the frequency range between 0.15 MHz and 30MHz. The CISPR Quasi-Peak and Average detector mode is employed. The two LISNs provide 50uH/50 ohm of coupling impedance for the measuring instrument. Both lines of the power mains connected to the EUT were checked for maximum conducted interference.

2.3.2 Radiated Emissions

The EUT is a placed on a turn table. For emissions testing at or below 1 GHz, the table height shall be 0.8 m above the reference ground plane. For emission measurements above 1 GHz, the table height shall be 1.5 m. The turn table shall rotate 360 degrees to determine the position of maximum emission level. EUT is set 3m away from the receiving antenna which varied from 1m to 4m to find out the highest emission. And also, each emission was to be maximized by changing the polarization of receiving antenna both horizontal and vertical. In order to find out the max. emission, the relative positions of this transmitter (EUT) was rotated through three orthogonal axes and measurement procedures for electric field radiated emissions above 1 GHz the EUT measurement is to be made “while keeping the antenna in the ‘cone of radiation’ from that area and pointed at the area both in azimuth and elevation, with polarization oriented for maximum response.” is still within the 3dB illumination BW of the measurement antenna.

2.3.3 Radiated Emission Test Sites For Measurements From 9 kHz To 30 MHz

Radiated emission below 30MHz is measured in a 9m*9m*6m semi-anechoic chamber, the measurements correspond to those obtained at an open-field test site.
There is a comparison data of both open-field test site and semi-Anechoic chamber, and the result came out very similar.

Unless otherwise stated the results shown in this test report refer only to the sample(s) tested and such sample(s) are retained for 90 days only.
除非另有說明，此報告結果僅對測試之樣品負責，同時此樣品僅保留90天。本報告未經本公司書面許可，不可部份複製。
This document is issued by the Company subject to its General Conditions of Service printed overleaf, available on request or accessible at http://www.sgs.com.tw/Terms-and-Conditions and for electronic format documents, subject to Terms and Conditions for Electronic Documents at http://www.sgs.com.tw/Terms-and-Conditions. Attention is drawn to the limitation of liability, indemnification and jurisdiction issues defined therein. Any holder of this document is advised that information contained hereon reflects the Company's findings at the time of its intervention only and within the limits of Client's instructions, if any. The Company's sole responsibility is to its Client and this document does not exonerate parties to a transaction from exercising all their rights and obligations under the transaction documents. This document cannot be reproduced except in full, without prior written approval of the Company. Any unauthorized alteration, forgery or falsification of the content or appearance of this document is unlawful and offenders may be prosecuted to the fullest extent of the law.

2.4 Configuration of Tested System

Conducted Setup

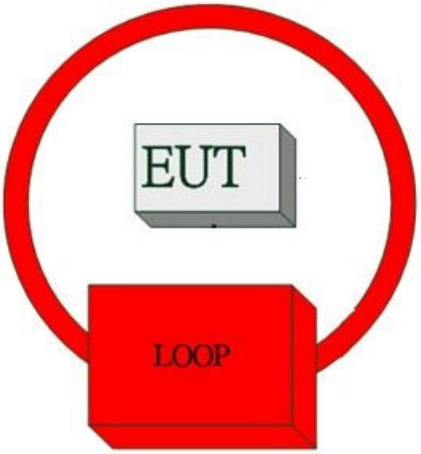

Radiated Setup

Conduction Setup

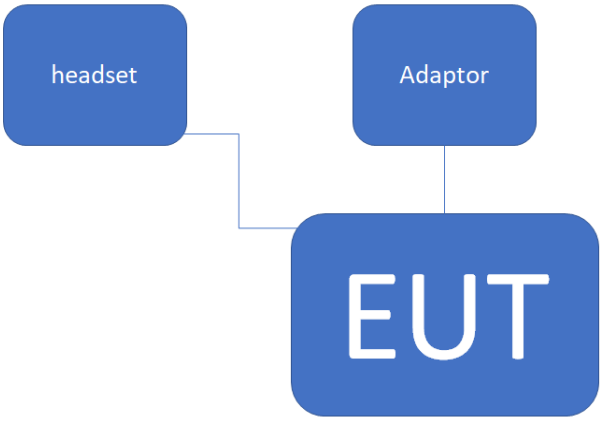

Item	Equipment	Mfr/Brand	Model/Type No.	Series No.
1.	Adapter	ASUS	A299-200150U-US	NA
2.	Headset	1MORE	EARPHONE BLK YODA	NA

Unless otherwise stated the results shown in this test report refer only to the sample(s) tested and such sample(s) are retained for 90 days only.
除非另有說明，此報告結果僅對測試之樣品負責，同時此樣品僅保留90天。本報告未經本公司書面許可，不可部份複製。
This document is issued by the Company subject to its General Conditions of Service printed overleaf, available on request or accessible at http://www.sgs.com.tw/Terms-and-Conditions and for electronic format documents, subject to Terms and Conditions for Electronic Documents at http://www.sgs.com.tw/Terms-and-Conditions. Attention is drawn to the limitation of liability, indemnification and jurisdiction issues defined therein. Any holder of this document is advised that information contained hereon reflects the Company's findings at the time of its intervention only and within the limits of Client's instructions, if any. The Company's sole responsibility is to its Client and this document does not exonerate parties to a transaction from exercising all their rights and obligations under the transaction documents. This document cannot be reproduced except in full, without prior written approval of the Company. Any unauthorized alteration, forgery or falsification of the content or appearance of this document is unlawful and offenders may be prosecuted to the fullest extent of the law.

3 SUMMARY OF TEST RESULTS

FCC Rules	ISED Rules	Description Of Test	Result
§15.207	RSS-Gen § 8.8	AC Power Line Conducted Emission	Compliant
§15.225 (a)-(d)	RSS210 Annex B B.6	Radiated Emission	Compliant
§15.209	RSS-Gen § 8.9	Radiated Emission Limits, general requirement	Compliant
§15.225 (e)	RSS210 Annex B B.6 (b)	Frequency Stability	Compliant
§2.1049 §15.215 (c)	RSS-Gen § 6.7	Emission Bandwidth	Compliant
§15.203	N/A	Antenna Requirement	Compliant

Unless otherwise stated the results shown in this test report refer only to the sample(s) tested and such sample(s) are retained for 90 days only.
除非另有說明，此報告結果僅對測試之樣品負責，同時此樣品僅保留90天。本報告未經本公司書面許可，不可部份複製。
This document is issued by the Company subject to its General Conditions of Service printed overleaf, available on request or accessible at http://www.sgs.com.tw/Terms-and-Conditions and for electronic format documents, subject to Terms and Conditions for Electronic Documents at http://www.sgs.com.tw/Terms-and-Conditions. Attention is drawn to the limitation of liability, indemnification and jurisdiction issues defined therein. Any holder of this document is advised that information contained hereon reflects the Company's findings at the time of its intervention only and within the limits of Client's instructions, if any. The Company's sole responsibility is to its Client and this document does not exonerate parties to a transaction from exercising all their rights and obligations under the transaction documents. This document cannot be reproduced except in full, without prior written approval of the Company. Any unauthorized alteration, forgery or falsification of the content or appearance of this document is unlawful and offenders may be prosecuted to the fullest extent of the law.

4 DESCRIPTION OF TEST MODES

4.1 The Worst Test Modes and Channel Details

1. The EUT stay in continuous transmission mode.
2. The frequency 13.56 MHz is the default channel to test, where it is the only manipulative channel as this application supports.
3. Only one configuration is supported/applicable as follows.

RADIATED EMISSION TEST			
MODE	AVAILABLE CHANNEL	TESTED CHANNEL	MODULATION
NFC	1	1	ASK
FREQUENCY STABILITY			
MODE	AVAILABLE CHANNEL	TESTED CHANNEL	MODULATION
NFC	1	1	ASK
20dB BANDWIDTH			
MODE	AVAILABLE CHANNEL	TESTED CHANNEL	MODULATION
NFC	1	1	ASK

The field strength of spurious radiation emission was measured as EUT stand-up position (H, E1 mode) and lie down position (E2 mode) for NFC Transmitter for channel the worst case H position was reported.

Unless otherwise stated the results shown in this test report refer only to the sample(s) tested and such sample(s) are retained for 90 days only.
除非另有說明，此報告結果僅對測試之樣品負責，同時此樣品僅保留90天。本報告未經本公司書面許可，不可部份複製。
This document is issued by the Company subject to its General Conditions of Service printed overleaf, available on request or accessible at http://www.sgs.com.tw/Terms-and-Conditions and for electronic format documents, subject to Terms and Conditions for Electronic Documents at http://www.sgs.com.tw/Terms-and-Conditions. Attention is drawn to the limitation of liability, indemnification and jurisdiction issues defined therein. Any holder of this document is advised that information contained hereon reflects the Company's findings at the time of its intervention only and within the limits of Client's instructions, if any. The Company's sole responsibility is to its Client and this document does not exonerate parties to a transaction from exercising all their rights and obligations under the transaction documents. This document cannot be reproduced except in full, without prior written approval of the Company. Any unauthorized alteration, forgery or falsification of the content or appearance of this document is unlawful and offenders may be prosecuted to the fullest extent of the law.

5 MEASUREMENT UNCERTAINTY

Test Items	Uncertainty
AC Power Line Conducted Emission	+/- 2.34 dB
Frequency Stability	+/- 1.54 Hz
99% & 20 dB OCCUPIED BANDWIDTH	+/- 1.54 Hz
Temperature	+/- 0.4 °C
Humidity	+/- 3.5 %
DC / AC Power Source	DC= +/- 1%, AC=+/- 1%

Radiated Spurious Emission Measurement Uncertainty				
Polarization: Vertical	+/-	2.64	dB	9kHz~30MHz: +-2.3dB
	+/-	4.93	dB	30MHz - 1000MHz: +/- 3.37dB
	+/-	4.81	dB	1GHz - 18GHz: +/- 4.04dB
	+/-	4.52	dB	18GHz - 40GHz: +/- 4.04dB
Polarization: Horizontal	+/-	2.64	dB	9kHz~30MHz: +-2.3dB
	+/-	4.45	dB	30MHz - 1000MHz: +/- 4.22dB
	+/-	4.81	dB	1GHz - 18GHz: +/- 4.08dB
	+/-	4.52	dB	18GHz - 40GHz: +/- 4.08dB

Note:

1. This uncertainty represents an expanded uncertainty expressed at approximately the 95% confidence level using a coverage factor of k=2.
2. The conformity assessment statement in this report is based solely on the test results, measurement uncertainty is excluded.

Unless otherwise stated the results shown in this test report refer only to the sample(s) tested and such sample(s) are retained for 90 days only.
除非另有說明，此報告結果僅對測試之樣品負責，同時此樣品僅保留90天。本報告未經本公司書面許可，不可部份複製。
This document is issued by the Company subject to its General Conditions of Service printed overleaf, available on request or accessible at http://www.sgs.com.tw/Terms-and-Conditions and for electronic format documents, subject to Terms and Conditions for Electronic Documents at http://www.sgs.com.tw/Terms-and-Conditions. Attention is drawn to the limitation of liability, indemnification and jurisdiction issues defined therein. Any holder of this document is advised that information contained hereon reflects the Company's findings at the time of its intervention only and within the limits of Client's instructions, if any. The Company's sole responsibility is to its Client and this document does not exonerate parties to a transaction from exercising all their rights and obligations under the transaction documents. This document cannot be reproduced except in full, without prior written approval of the Company. Any unauthorized alteration, forgery or falsification of the content or appearance of this document is unlawful and offenders may be prosecuted to the fullest extent of the law.

6 CONDUCTED EMISSIONS TEST

6.1 Standard Applicable

According to §15.207 and frequency within 150 kHz to 30MHz shall not exceed the limit table as below.

Frequency range MHz	Limits dB(uV)	
	Quasi-peak	Average
0.15 to 0.50	66 to 56	56 to 46
0.50 to 5	56	46
5 to 30	60	50
Note 1.The lower limit shall apply at the transition frequencies 2.The limit decreases linearly with the logarithm of the frequency in the range 0.15 MHz to 0.50 MHz.		

6.2 Measurement Equipment Used:

Radiated Emission Test Site: Conduction 1					
EQUIPMENT TYPE	**MFR**	**MODEL NUMBER**	**SERIAL NUMBER**	**LAST CAL.**	**CAL DUE.**
LISN	SCHWARZBECK	NSLK 8127	8127-465	04/09/2020	04/08/2021
Coaxial Cables	N/A	Coaxial Cable	161207	12/07/2020	12/06/2021
Test Software	audix	e3	Ver. 6.11-20180413	01/01/2021	12/31/2021
EMI Test Receiver	R&S	ESCI 7	100759	07/13/2020	07/12/2021

6.3 EUT Setup

1. The conducted emission tests were performed in the test site, using the setup in accordance with the ANSI C63.10:2013.
2. The AC/DC Power adaptor of EUT was plug-in LISN. The EUT was placed flushed with the rear of the table.
3. The LISN was connected with 120Vac/60Hz power source.

Unless otherwise stated the results shown in this test report refer only to the sample(s) tested and such sample(s) are retained for 90 days only.
除非另有說明，此報告結果僅對測試之樣品負責，同時此樣品僅保留90天。本報告未經本公司書面許可，不可部份複製。
This document is issued by the Company subject to its General Conditions of Service printed overleaf, available on request or accessible at http://www.sgs.com.tw/Terms-and-Conditions and for electronic format documents, subject to Terms and Conditions for Electronic Documents at http://www.sgs.com.tw/Terms-and-Conditions. Attention is drawn to the limitation of liability, indemnification and jurisdiction issues defined therein. Any holder of this document is advised that information contained hereon reflects the Company's findings at the time of its intervention only and within the limits of Client's instructions, if any. The Company's sole responsibility is to its Client and this document does not exonerate parties to a transaction from exercising all their rights and obligations under the transaction documents. This document cannot be reproduced except in full, without prior written approval of the Company. Any unauthorized alteration, forgery or falsification of the content or appearance of this document is unlawful and offenders may be prosecuted to the fullest extent of the law.

6.4 Test SET-UP (Block Diagram of Configuration)

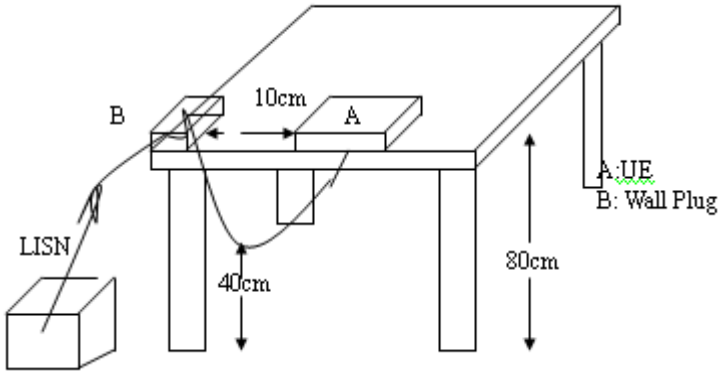

6.5 Measurement Procedure

1. The EUT was placed on a table which is 0.8m above ground plane.
2. Maximum procedure was performed on the six highest emissions to ensure EUT compliance.
3. Repeat above procedures until all frequency measured were complete.

6.6 Measurement Result

Note: Refer to next page for measurement data and plots.
Note2: The * reveals the worst-case results that closet to the limit.

Unless otherwise stated the results shown in this test report refer only to the sample(s) tested and such sample(s) are retained for 90 days only.
除非另有說明，此報告結果僅對測試之樣品負責，同時此樣品僅保留90天。本報告未經本公司書面許可，不可部份複製。
This document is issued by the Company subject to its General Conditions of Service printed overleaf, available on request or accessible at http://www.sgs.com.tw/Terms-and-Conditions and for electronic format documents, subject to Terms and Conditions for Electronic Documents at http://www.sgs.com.tw/Terms-and-Conditions. Attention is drawn to the limitation of liability, indemnification and jurisdiction issues defined therein. Any holder of this document is advised that information contained hereon reflects the Company's findings at the time of its intervention only and within the limits of Client's instructions, if any. The Company's sole responsibility is to its Client and this document does not exonerate parties to a transaction from exercising all their rights and obligations under the transaction documents. This document cannot be reproduced except in full, without prior written approval of the Company. Any unauthorized alteration, forgery or falsification of the content or appearance of this document is unlawful and offenders may be prosecuted to the fullest extent of the law.

AC POWER LINE CONDUCTED EMISSION TEST DATA

Report Number	:ER-2021-20009	Test Site	:Conduction 6F
Test Mode	:NFC	Test Date	:2021-02-20
Power	:AC 120V/60Hz	Temp./Humi.	:22.5/47
Probe	:L	Engineer	:Neo Tsai
Note:	:		

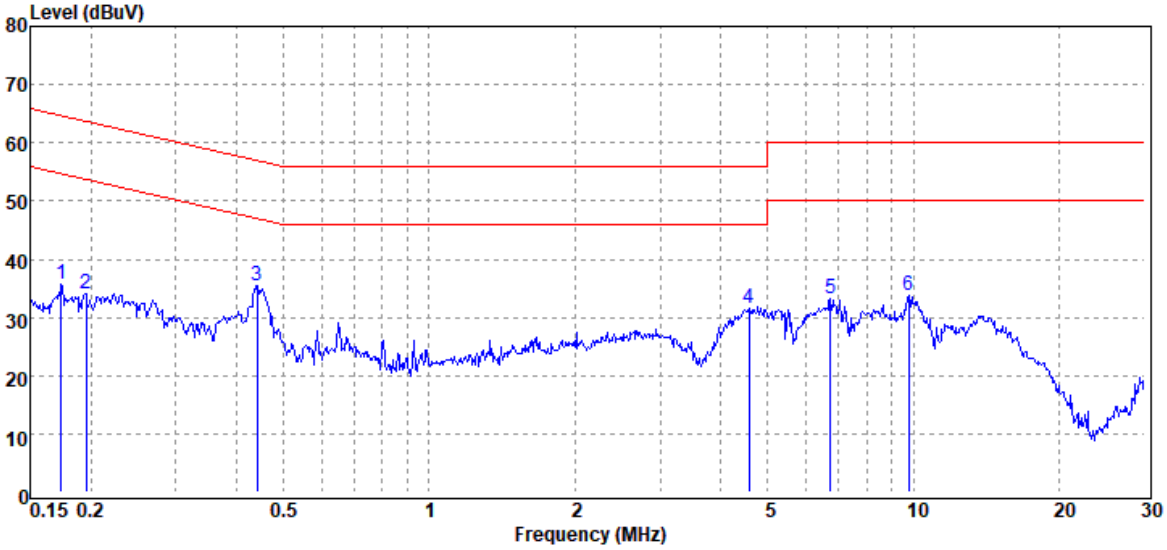

Freq. MHz	Detector Mode PK/QP/AV	Spectrum Reading Level dBµV	Factor dB	Actual FS dBµV	Limit dBµV	Margin dB
0.17	Peak	35.69	0.04	35.73	64.77	-29.04
0.20	Peak	33.96	0.04	34.00	63.80	-29.80
0.44	Peak	35.28	0.13	35.41	57.02	-21.61
4.57	Peak	31.08	0.51	31.59	56.00	-24.41
6.73	Peak	32.68	0.67	33.35	60.00	-26.65
9.76	Peak	33.06	0.82	33.88	60.00	-26.12

Unless otherwise stated the results shown in this test report refer only to the sample(s) tested and such sample(s) are retained for 90 days only.
除非另有說明，此報告結果僅對測試之樣品負責，同時此樣品僅保留90天。本報告未經本公司書面許可，不可部份複製。
This document is issued by the Company subject to its General Conditions of Service printed overleaf, available on request or accessible at http://www.sgs.com.tw/Terms-and-Conditions and for electronic format documents, subject to Terms and Conditions for Electronic Documents at http://www.sgs.com.tw/Terms-and-Conditions. Attention is drawn to the limitation of liability, indemnification and jurisdiction issues defined therein. Any holder of this document is advised that information contained hereon reflects the Company's findings at the time of its intervention only and within the limits of Client's instructions, if any. The Company's sole responsibility is to its Client and this document does not exonerate parties to a transaction from exercising all their rights and obligations under the transaction documents. This document cannot be reproduced except in full, without prior written approval of the Company. Any unauthorized alteration, forgery or falsification of the content or appearance of this document is unlawful and offenders may be prosecuted to the fullest extent of the law.

Report Number	:ER-2021-20009	Test Site	:Conduction 6F
Test Mode	:NFC	Test Date	:2021-02-20
Power	:AC 120V/60Hz	Temp./Humi.	:22.5/47
Probe	:N	Engineer	:Neo Tsai
Note:	:		

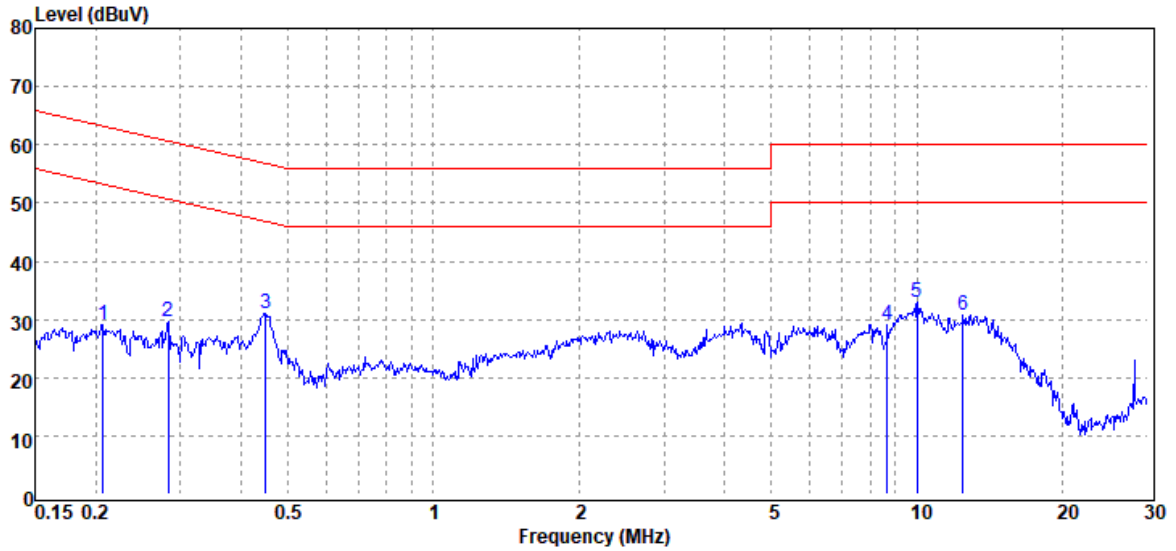

Freq. MHz	Detector Mode PK/QP/AV	Spectrum Reading Level dBµV	Factor dB	Actual FS dBµV	Limit dBµV	Margin dB
0.21	Peak	28.87	0.11	28.98	63.32	-34.34
0.28	Peak	29.45	0.11	29.56	60.72	-31.16
0.45	Peak	30.93	0.20	31.13	56.89	-25.76
8.68	Peak	28.35	0.65	29.00	60.00	-31.00
10.02	Peak	32.15	0.70	32.85	60.00	-27.15
12.45	Peak	29.96	0.85	30.81	60.00	-29.19

Unless otherwise stated the results shown in this test report refer only to the sample(s) tested and such sample(s) are retained for 90 days only.
除非另有說明，此報告結果僅對測試之樣品負責，同時此樣品僅保留90天。本報告未經本公司書面許可，不可部份複製。
This document is issued by the Company subject to its General Conditions of Service printed overleaf, available on request or accessible at http://www.sgs.com.tw/Terms-and-Conditions and for electronic format documents, subject to Terms and Conditions for Electronic Documents at http://www.sgs.com.tw/Terms-and-Conditions. Attention is drawn to the limitation of liability, indemnification and jurisdiction issues defined therein. Any holder of this document is advised that information contained hereon reflects the Company's findings at the time of its intervention only and within the limits of Client's instructions, if any. The Company's sole responsibility is to its Client and this document does not exonerate parties to a transaction from exercising all their rights and obligations under the transaction documents. This document cannot be reproduced except in full, without prior written approval of the Company. Any unauthorized alteration, forgery or falsification of the content or appearance of this document is unlawful and offenders may be prosecuted to the fullest extent of the law.

7 RADIATED EMISSION TEST

7.1 Measurement Procedure

1. Configure the EUT according to ANSI C63.10.
2. The EUT was placed on a turn table which is 0.8m above ground plane and been measured in the frequency range between 0.009MHz to 30MHz and 30MHz to 1GHz.
3. The turn table shall rotate 360 degrees to determine the position of maximum emission level.
4. EUT is set 3m away from the receiving antenna which varied from 1m to 4m to find out the highest emission.
5. Maximum procedure was performed on the six highest emissions to ensure EUT compliance.
6. And also, each emission was to be maximized by changing the polarization of receiving antenna both horizontal and vertical.
7. Repeat above procedures until all default test channel measured were complete.

7.2 Test SET-UP (Block Diagram of Configuration)

(A) Radiated Emission Test Set-UP Frequency Below 30MHz.

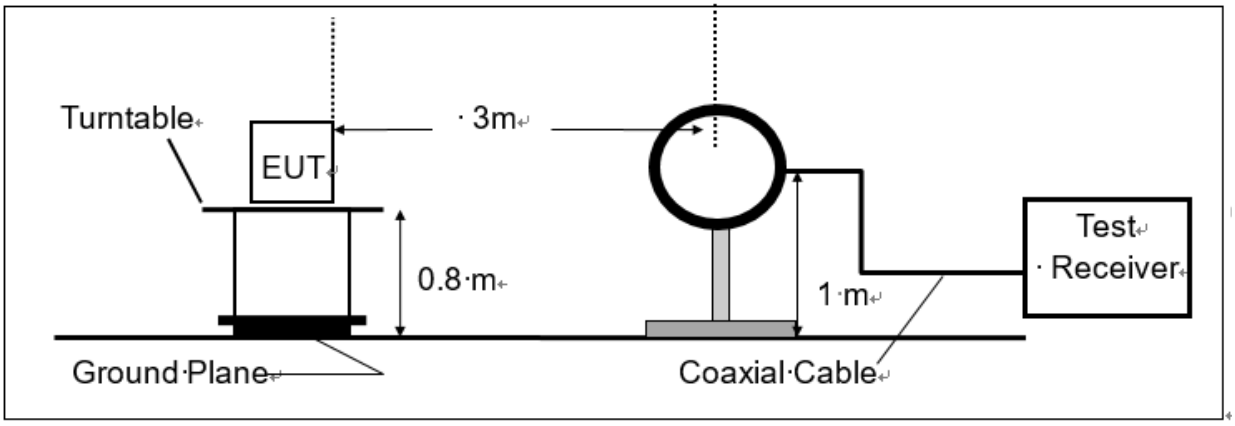

(B) Radiated Emission Test Set-Up, Frequency form 30MHz to 1000MHz

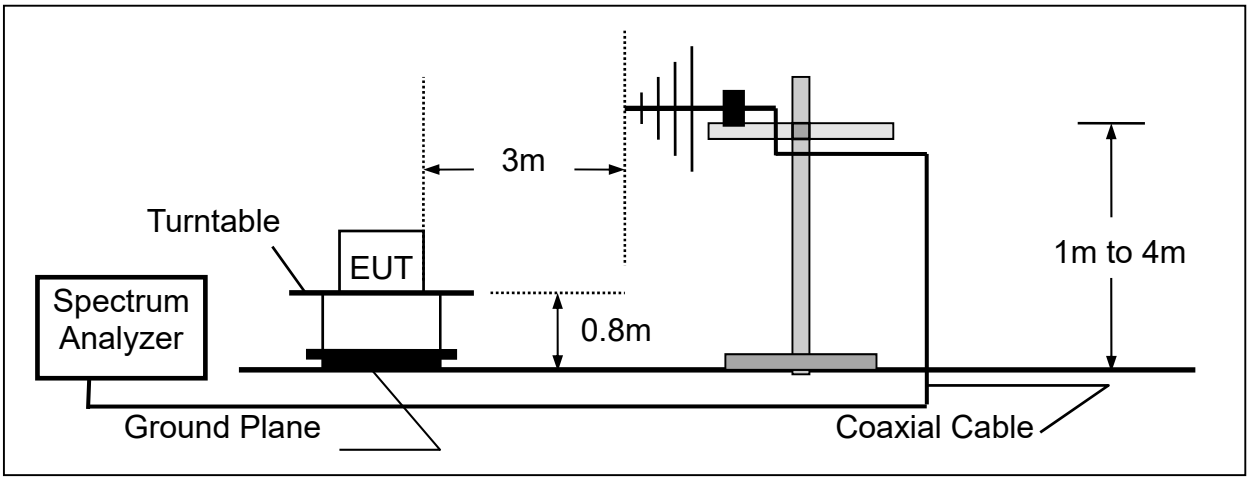

Unless otherwise stated the results shown in this test report refer only to the sample(s) tested and such sample(s) are retained for 90 days only.
除非另有說明，此報告結果僅對測試之樣品負責，同時此樣品僅保留90天。本報告未經本公司書面許可，不可部份複製。
This document is issued by the Company subject to its General Conditions of Service printed overleaf, available on request or accessible at http://www.sgs.com.tw/Terms-and-Conditions and for electronic format documents, subject to Terms and Conditions for Electronic Documents at http://www.sgs.com.tw/Terms-and-Conditions. Attention is drawn to the limitation of liability, indemnification and jurisdiction issues defined therein. Any holder of this document is advised that information contained hereon reflects the Company's findings at the time of its intervention only and within the limits of Client's instructions, if any. The Company's sole responsibility is to its Client and this document does not exonerate parties to a transaction from exercising all their rights and obligations under the transaction documents. This document cannot be reproduced except in full, without prior written approval of the Company. Any unauthorized alteration, forgery or falsification of the content or appearance of this document is unlawful and offenders may be prosecuted to the fullest extent of the law.

7.3 Measurement Equipment Used:

Radiated Emission Test Site: SAC 1					
EQUIPMENT TYPE	MFR	MODEL NUMBER	SERIAL NUMBER	LAST CAL.	CAL DUE.
Site Cal	SGS	SAC I chamber	N/A	01/01/2021	12/31/2021
Bi-log Antenna	TESEO	CBL 6112D	35242 & AT-N0555	01/13/2021	01/12/2022
Loop Antenna	ETS.LINDGREN	6502	148045	10/19/2020	10/18/2021
Spectrum Analyzer	Agilent	E4446A	MY51100003	10/29/2020	10/28/2021
Test Software	audix	e3	Ver. 6.11-20180413	01/01/2021	12/31/2021
EMI Test Receiver	R&S	ESCI 7	100759	07/13/2020	07/12/2021
Pre-Amplifier	HP	8447D	2944A09469	12/16/2020	12/15/2021
Coaxial Cable	Huber Suhner	succoflex 102	MY2622/2	12/16/2020	12/15/2021
Coaxial Cable	Huber Suhner	succoflex 104A	800086/4a	12/16/2020	12/15/2021
Coaxial Cable	Huber Suhner	EMC 104-SM-SM-2000	160123	12/16/2020	12/15/2021

7.4 Field Strength Calculation

The field strength is calculated by adding the Antenna Factor and Cable Factor and subtracting the Amplifier Gain and Duty Cycle Correction Factor (if any) from the measured reading. The basic equation with a sample calculation is as follows:

FS = RA + AF + CL - AG

Where	FS = Field Strength	CL = Cable Attenuation Factor (Cable Loss)
	RA = Reading Amplitude	AG = Amplifier Gain
	AF = Antenna Factor	

7.5 Field Strength of Fundamental Emission

Unless otherwise stated the results shown in this test report refer only to the sample(s) tested and such sample(s) are retained for 90 days only.
除非另有說明，此報告結果僅對測試之樣品負責，同時此樣品僅保留90天。本報告未經本公司書面許可，不可部份複製。
This document is issued by the Company subject to its General Conditions of Service printed overleaf, available on request or accessible at http://www.sgs.com.tw/Terms-and-Conditions and for electronic format documents, subject to Terms and Conditions for Electronic Documents at http://www.sgs.com.tw/Terms-and-Conditions. Attention is drawn to the limitation of liability, indemnification and jurisdiction issues defined therein. Any holder of this document is advised that information contained hereon reflects the Company's findings at the time of its intervention only and within the limits of Client's instructions, if any. The Company's sole responsibility is to its Client and this document does not exonerate parties to a transaction from exercising all their rights and obligations under the transaction documents. This document cannot be reproduced except in full, without prior written approval of the Company. Any unauthorized alteration, forgery or falsification of the content or appearance of this document is unlawful and offenders may be prosecuted to the fullest extent of the law.

7.5.1 Applicable standard

Rules and specifiactions	CFR 47 Part 15 section 15.225(a)-(d)		
Frequency of Emission (MHz)	Field Strength (μV/m)at 30m	Field Strength (dBμV/m)at 30m	Field Strength (dBμV/m)at 3m
1.705~13.110	30	29.5	69.5
13.110~13.410	106	40.5	80.5
13.410~13.553	334	50.5	90.47
13.553~13.567	15848	84	124
13.567~13.710	334	50.5	90.47
13.710~14.010	106	40.5	80.5
14.010~30.00	30	29.5	69.5

Radiated Mask per ISED RSS 210 Annex B B6

(a) 15.848 millivolts/m (84 dBμV/m) at 30 m, within the band 13.553-13.567 MHz.

(b) 334 microvolts/m (50.5 dBμV/m) at 30 m, within the bands 13.410-13.553 MHz and 13.567-13.710 MHz.

(c) 106 microvolts/m (40.5 dBμV/m) at 30 m, within the bands 13.110-13.410 MHz and 13.710-14.010 MHz.

(d) RSS-Gen general field strength limits for frequencies outside the band 13.110-14.010 MHz

Unless otherwise stated the results shown in this test report refer only to the sample(s) tested and such sample(s) are retained for 90 days only.
除非另有說明，此報告結果僅對測試之樣品負責，同時此樣品僅保留90天。本報告未經本公司書面許可，不可部份複製。
This document is issued by the Company subject to its General Conditions of Service printed overleaf, available on request or accessible at http://www.sgs.com.tw/Terms-and-Conditions and for electronic format documents, subject to Terms and Conditions for Electronic Documents at http://www.sgs.com.tw/Terms-and-Conditions. Attention is drawn to the limitation of liability, indemnification and jurisdiction issues defined therein. Any holder of this document is advised that information contained hereon reflects the Company's findings at the time of its intervention only and within the limits of Client's instructions, if any. The Company's sole responsibility is to its Client and this document does not exonerate parties to a transaction from exercising all their rights and obligations under the transaction documents. This document cannot be reproduced except in full, without prior written approval of the Company. Any unauthorized alteration, forgery or falsification of the content or appearance of this document is unlawful and offenders may be prosecuted to the fullest extent of the law.

7.5.2 Distance Extrapolation Factor

30m to 3m

Distance extrapolation = 40 *log (30/3) = 40 dB
Limit is re-adjusted in terms of limit taken in 3m = 20 *log (15848 uV/m) + 40 = 124.00dBuV/m

30m to 10m

Distance extrapolation = 40 *log (30/10) = 19.08 dB
Limit is re-adjusted in terms of limit taken in 3m = 20 *log (15848 uV/m) + 19.08 = 103.08dBuV/m

10m to 3m

Distance extrapolation = 40 *log (10/3) = 20.92 dB
Limit is re-adjusted in terms of limit taken in 3m = 20 *log (15848 uV/m) + 20.92 = 104.92dBuV/m

Note:

1. Emission level in dBuV/m=20 log (μV/m)
2. Distance extrapolation factor = 40 log (required distance/ test distance) (dB)
3. The lower limit shall apply at the transition frequencies.
4. KDB 414788 D01 OATS and 3m semi-anechoic chamber Justification:
   Base on FCC 15.31 (f) (2): measurements may be performed at a distance closer than that specified in the regulations; however, an attempt should be made to avoid making measurements in the near field. OATS and 3m SAC chamber testing had been performed and 3m SAC measured test result is the worst case test result.

Actual FS(dBμV/m) = Spectrum. Reading level(dBμV) + Factor(dB)

Factor(dB) = Antenna Factor(dBμV/m) + Cable Loss(dB) – Pre_Amplifier Gain(dB)

The trace on RE(radiation emission) plot is as colored blue, and the detection manner we've employed is peak detector.

Unless otherwise stated the results shown in this test report refer only to the sample(s) tested and such sample(s) are retained for 90 days only.
除非另有說明，此報告結果僅對測試之樣品負責，同時此樣品僅保留90天。本報告未經本公司書面許可，不可部份複製。
This document is issued by the Company subject to its General Conditions of Service printed overleaf, available on request or accessible at http://www.sgs.com.tw/Terms-and-Conditions and for electronic format documents, subject to Terms and Conditions for Electronic Documents at http://www.sgs.com.tw/Terms-and-Conditions. Attention is drawn to the limitation of liability, indemnification and jurisdiction issues defined therein. Any holder of this document is advised that information contained hereon reflects the Company's findings at the time of its intervention only and within the limits of Client's instructions, if any. The Company's sole responsibility is to its Client and this document does not exonerate parties to a transaction from exercising all their rights and obligations under the transaction documents. This document cannot be reproduced except in full, without prior written approval of the Company. Any unauthorized alteration, forgery or falsification of the content or appearance of this document is unlawful and offenders may be prosecuted to the fullest extent of the law.

7.5.3 Field Strength of Fundamental Emission Measurement Result

Report Number	:ER/2021/20009	Test Site	:SAC I Chamber
Operation Mode	:NFC	Test Date	:2021-02-20
Test Frequency	:13.56 MHz	Temp./Humi.	:22.1/45
Test Mode	:Main	Antenna Pol.	:VERTICAL
EUT Pol	:H Plane	Engineer	:Neo Tsai

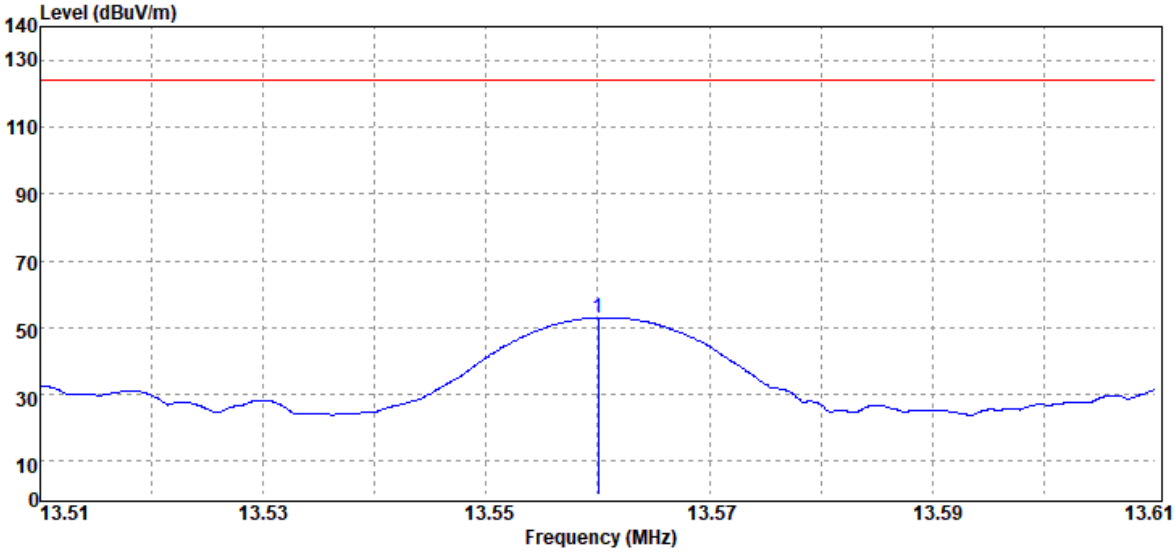

Freq. MHz	Detector Mode PK/QP/AV	Spectrum Reading Level dBμV	Factor dB	Actual FS dBμV/m	Limit @3m dBμV/m	Margin dB
13.56	Peak	41.14	11.89	53.03	124.00	-70.97

Unless otherwise stated the results shown in this test report refer only to the sample(s) tested and such sample(s) are retained for 90 days only.
除非另有說明，此報告結果僅對測試之樣品負責，同時此樣品僅保留90天。本報告未經本公司書面許可，不可部份複製。
This document is issued by the Company subject to its General Conditions of Service printed overleaf, available on request or accessible at http://www.sgs.com.tw/Terms-and-Conditions and for electronic format documents, subject to Terms and Conditions for Electronic Documents at http://www.sgs.com.tw/Terms-and-Conditions. Attention is drawn to the limitation of liability, indemnification and jurisdiction issues defined therein. Any holder of this document is advised that information contained hereon reflects the Company's findings at the time of its intervention only and within the limits of Client's instructions, if any. The Company's sole responsibility is to its Client and this document does not exonerate parties to a transaction from exercising all their rights and obligations under the transaction documents. This document cannot be reproduced except in full, without prior written approval of the Company. Any unauthorized alteration, forgery or falsification of the content or appearance of this document is unlawful and offenders may be prosecuted to the fullest extent of the law.

Report Number	:ER/2021/20009	Test Site	:SAC I Chamber
Operation Mode	:NFC	Test Date	:2021-02-20
Test Frequency	:13.56 MHz	Temp./Humi.	:22.1/45
Test Mode	:Main	Antenna Pol.	:HORIZONTAL
EUT Pol	:H Plane	Engineer	:Neo Tsai

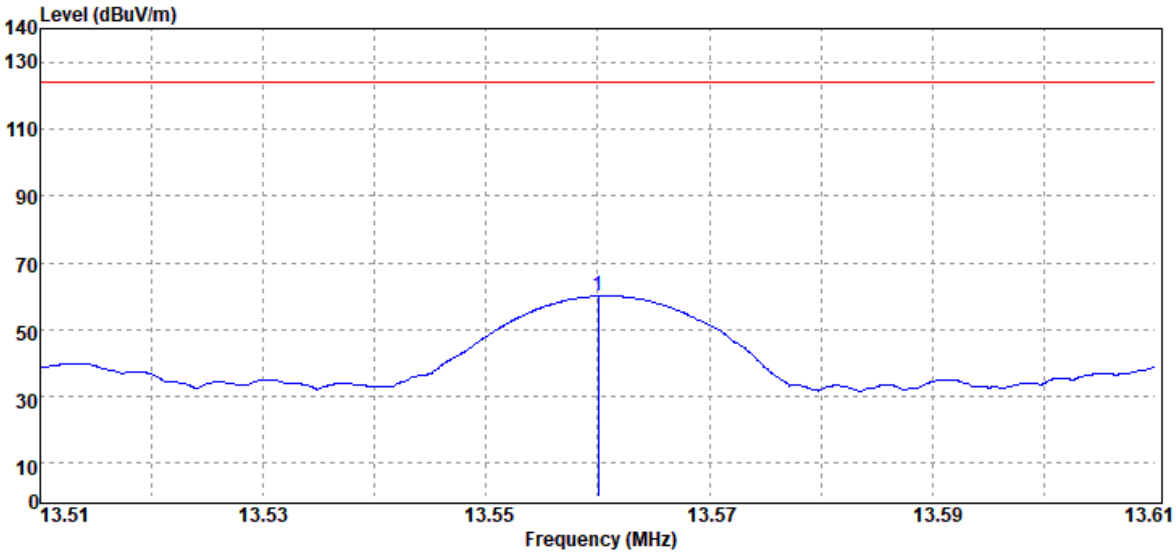

Freq. MHz	Detector Mode PK/QP/AV	Spectrum Reading Level dBµV	Factor dB	Actual FS dBµV/m	Limit @3m dBµV/m	Margin dB
13.56	Peak	48.14	11.89	60.03	124.00	-63.97

Unless otherwise stated the results shown in this test report refer only to the sample(s) tested and such sample(s) are retained for 90 days only.
除非另有說明，此報告結果僅對測試之樣品負責，同時此樣品僅保留90天。本報告未經本公司書面許可，不可部份複製。
This document is issued by the Company subject to its General Conditions of Service printed overleaf, available on request or accessible at http://www.sgs.com.tw/Terms-and-Conditions and for electronic format documents, subject to Terms and Conditions for Electronic Documents at http://www.sgs.com.tw/Terms-and-Conditions. Attention is drawn to the limitation of liability, indemnification and jurisdiction issues defined therein. Any holder of this document is advised that information contained hereon reflects the Company's findings at the time of its intervention only and within the limits of Client's instructions, if any. The Company's sole responsibility is to its Client and this document does not exonerate parties to a transaction from exercising all their rights and obligations under the transaction documents. This document cannot be reproduced except in full, without prior written approval of the Company. Any unauthorized alteration, forgery or falsification of the content or appearance of this document is unlawful and offenders may be prosecuted to the fullest extent of the law.

Report Number	:ER/2021/20009	Test Site	:SAC I Chamber
Operation Mode	:NFC	Test Date	:2021-02-20
Test Frequency	:13.56 MHz	Temp./Humi.	:22.1/45
Test Mode	:Mask	Antenna Pol.	:VERTICAL
EUT Pol	:H Plane	Engineer	:Neo Tsai

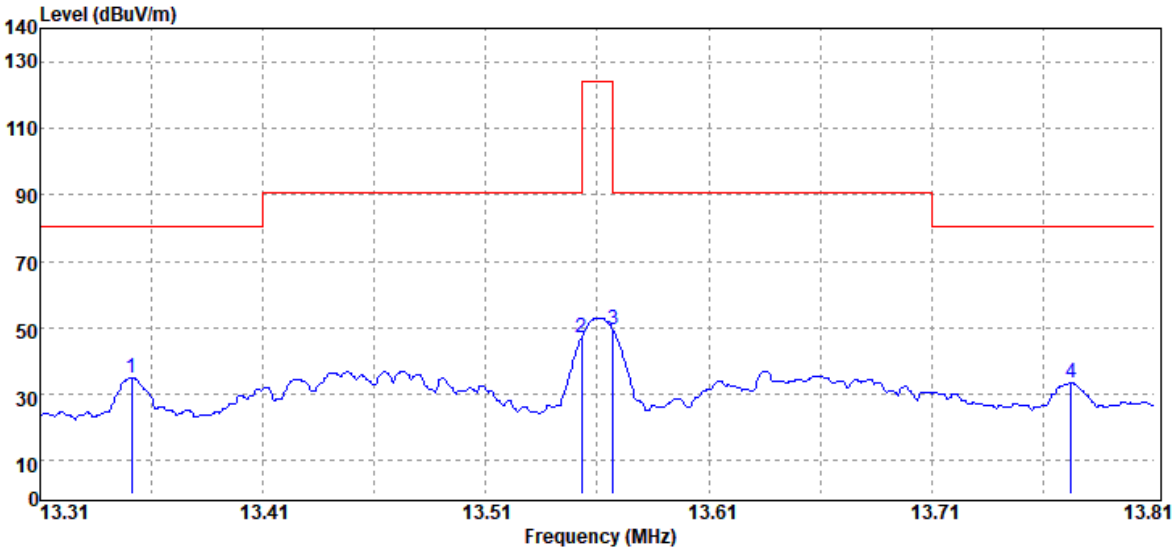

Freq. MHz	Detector Mode PK/QP/AV	Spectrum Reading Level dBµV	Factor dB	Actual FS dBµV/m	Limit @3m dBµV/m	Margin dB
13.35	Peak	23.19	11.90	35.09	80.54	-45.45
13.55	Peak	35.26	11.89	47.15	90.47	-43.32
13.57	Peak	37.34	11.89	49.23	90.47	-41.24
13.77	Peak	21.38	11.88	33.26	80.50	-47.24

Unless otherwise stated the results shown in this test report refer only to the sample(s) tested and such sample(s) are retained for 90 days only.
除非另有說明，此報告結果僅對測試之樣品負責，同時此樣品僅保留90天。本報告未經本公司書面許可，不可部份複製。
This document is issued by the Company subject to its General Conditions of Service printed overleaf, available on request or accessible at http://www.sgs.com.tw/Terms-and-Conditions and for electronic format documents, subject to Terms and Conditions for Electronic Documents at http://www.sgs.com.tw/Terms-and-Conditions. Attention is drawn to the limitation of liability, indemnification and jurisdiction issues defined therein. Any holder of this document is advised that information contained hereon reflects the Company's findings at the time of its intervention only and within the limits of Client's instructions, if any. The Company's sole responsibility is to its Client and this document does not exonerate parties to a transaction from exercising all their rights and obligations under the transaction documents. This document cannot be reproduced except in full, without prior written approval of the Company. Any unauthorized alteration, forgery or falsification of the content or appearance of this document is unlawful and offenders may be prosecuted to the fullest extent of the law.

Report Number	:ER/2021/20009	Test Site	:SAC I Chamber
Operation Mode	:NFC	Test Date	:2021-02-20
Test Frequency	:13.56 MHz	Temp./Humi.	:22.1/45
Test Mode	:Mask	Antenna Pol.	:HORIZONTAL
EUT Pol	:H Plane	Engineer	:Neo Tsai

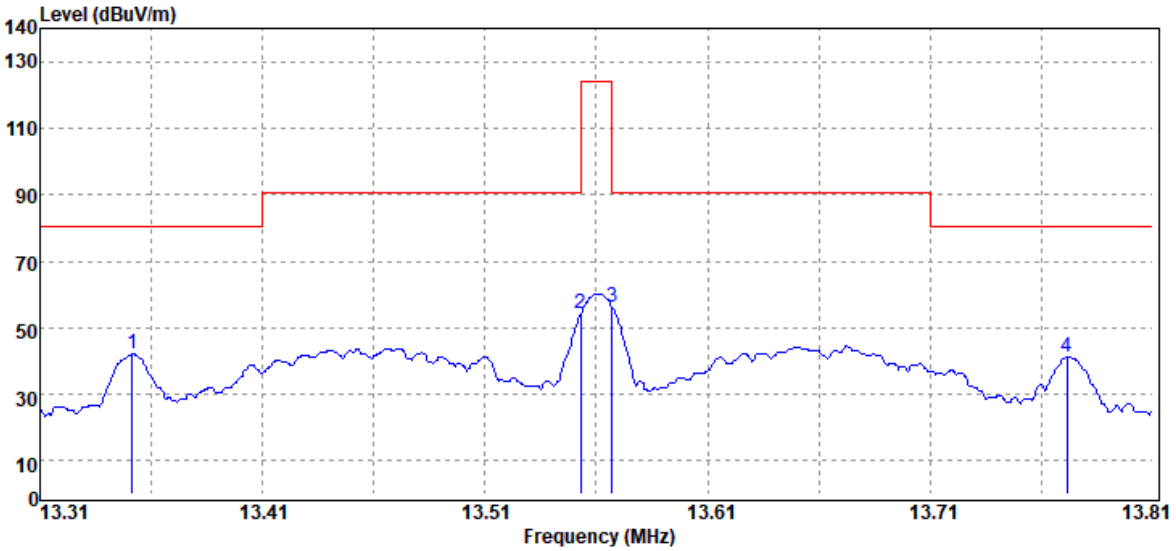

Freq. MHz	Detector Mode PK/QP/AV	Spectrum Reading Level dBµV	Factor dB	Actual FS dBµV/m	Limit @3m dBµV/m	Margin dB
13.35	Peak	30.05	11.90	41.95	80.54	-38.59
13.55	Peak	42.24	11.89	54.13	90.47	-36.34
13.57	Peak	44.34	11.89	56.23	90.47	-34.24
13.77	Peak	29.18	11.88	41.06	80.50	-39.44

Unless otherwise stated the results shown in this test report refer only to the sample(s) tested and such sample(s) are retained for 90 days only.
除非另有說明，此報告結果僅對測試之樣品負責，同時此樣品僅保留90天。本報告未經本公司書面許可，不可部份複製。
This document is issued by the Company subject to its General Conditions of Service printed overleaf, available on request or accessible at http://www.sgs.com.tw/Terms-and-Conditions and for electronic format documents, subject to Terms and Conditions for Electronic Documents at http://www.sgs.com.tw/Terms-and-Conditions. Attention is drawn to the limitation of liability, indemnification and jurisdiction issues defined therein. Any holder of this document is advised that information contained hereon reflects the Company's findings at the time of its intervention only and within the limits of Client's instructions, if any. The Company's sole responsibility is to its Client and this document does not exonerate parties to a transaction from exercising all their rights and obligations under the transaction documents. This document cannot be reproduced except in full, without prior written approval of the Company. Any unauthorized alteration, forgery or falsification of the content or appearance of this document is unlawful and offenders may be prosecuted to the fullest extent of the law.

7.6 Radiated Spurious Emission Measurement

7.6.1 Standard Applicable

The field strength of any emissions appearing outside of the 13.110-14.010 MHz shall not exceed the general radiated emission limits in section 15.209 as below.

Frequency (MHz)	Field strength (μV/m)	Distance (meters)
0.009~0.490	2400/F(kHz)	300
0.490~1.705	24000/F(kHz)	30
1.705-30	30	30
30-88	100	3
88-216	150	3
216-960	200	3
Above 960	500	3

Note:

1. Emission level in dBμV/m=20 log (μV/m)
2. Distance extrapolation factor = 40 log (required distance/ test distance) (dB)
3. 20*log(30uV/m) + 40dB = 69.54 dBuV/m
4. The lower limit shall apply at the transition frequencies.
5. The measurement was undertaken in closer distance at 3m, where extrapolation factor is offset to convert the limit of the measurement.
6. Only spurious frequency is permitted to locate within the Restricted Bands specified in provision of §15.205 and RSS-Gen §8.10.
7. The general radiated emission limits in §15.209 and RSS-Gen §8.9 apply for the spurious emission generate from UE, except for the fundamental emission where the respective section specifies otherwise.

Unless otherwise stated the results shown in this test report refer only to the sample(s) tested and such sample(s) are retained for 90 days only.
除非另有說明，此報告結果僅對測試之樣品負責，同時此樣品僅保留90天。本報告未經本公司書面許可，不可部份複製。
This document is issued by the Company subject to its General Conditions of Service printed overleaf, available on request or accessible at http://www.sgs.com.tw/Terms-and-Conditions and for electronic format documents, subject to Terms and Conditions for Electronic Documents at http://www.sgs.com.tw/Terms-and-Conditions. Attention is drawn to the limitation of liability, indemnification and jurisdiction issues defined therein. Any holder of this document is advised that information contained hereon reflects the Company's findings at the time of its intervention only and within the limits of Client's instructions, if any. The Company's sole responsibility is to its Client and this document does not exonerate parties to a transaction from exercising all their rights and obligations under the transaction documents. This document cannot be reproduced except in full, without prior written approval of the Company. Any unauthorized alteration, forgery or falsification of the content or appearance of this document is unlawful and offenders may be prosecuted to the fullest extent of the law.

7.6.2 Radiated Spurious Emission Measurement Result

Report Number	:ER/2021/20009	Test Site	:SAC I Chamber
Operation Mode	:NFC	Test Date	:2021-02-20
Test Frequency	:13.56 MHz	Temp./Humi.	:22.1/45
Test Mode	:TX	Antenna Pol.	:VERTICAL
EUT Pol	:H Plane	Engineer	:Neo Tsai

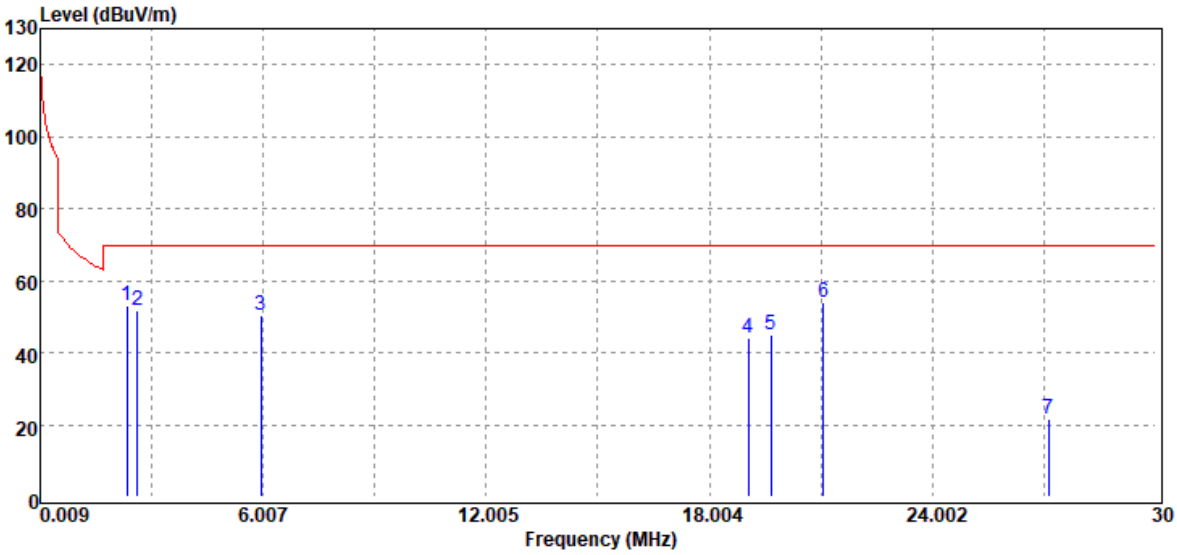

Freq. MHz	Detector Mode PK/QP/AV	Spectrum Reading Level dBμV	Factor dB	Actual FS dBμV/m	Limit @3m dBμV/m	Margin dB
2.35	Peak	42.11	11.19	53.30	69.54	-16.24
2.62	Peak	40.63	11.15	51.78	69.54	-17.76
5.95	Peak	39.09	11.39	50.48	69.54	-19.06
19.05	Peak	32.73	11.57	44.30	69.54	-25.24
19.65	Peak	33.45	11.54	44.99	69.54	-24.55
21.06	Peak	42.62	11.23	53.85	69.54	-15.69
27.12	Peak	11.88	9.81	21.69	69.54	-47.85

Unless otherwise stated the results shown in this test report refer only to the sample(s) tested and such sample(s) are retained for 90 days only.
除非另有說明，此報告結果僅對測試之樣品負責，同時此樣品僅保留90天。本報告未經本公司書面許可，不可部份複製。
This document is issued by the Company subject to its General Conditions of Service printed overleaf, available on request or accessible at http://www.sgs.com.tw/Terms-and-Conditions and for electronic format documents, subject to Terms and Conditions for Electronic Documents at http://www.sgs.com.tw/Terms-and-Conditions. Attention is drawn to the limitation of liability, indemnification and jurisdiction issues defined therein. Any holder of this document is advised that information contained hereon reflects the Company's findings at the time of its intervention only and within the limits of Client's instructions, if any. The Company's sole responsibility is to its Client and this document does not exonerate parties to a transaction from exercising all their rights and obligations under the transaction documents. This document cannot be reproduced except in full, without prior written approval of the Company. Any unauthorized alteration, forgery or falsification of the content or appearance of this document is unlawful and offenders may be prosecuted to the fullest extent of the law.

Report Number	:ER/2021/20009	Test Site	:SAC I Chamber
Operation Mode	:NFC	Test Date	:2021-02-20
Test Frequency	:13.56 MHz	Temp./Humi.	:22.1/45
Test Mode	:TX	Antenna Pol.	:HORIZONTAL
EUT Pol	:H Plane	Engineer	:Neo Tsai

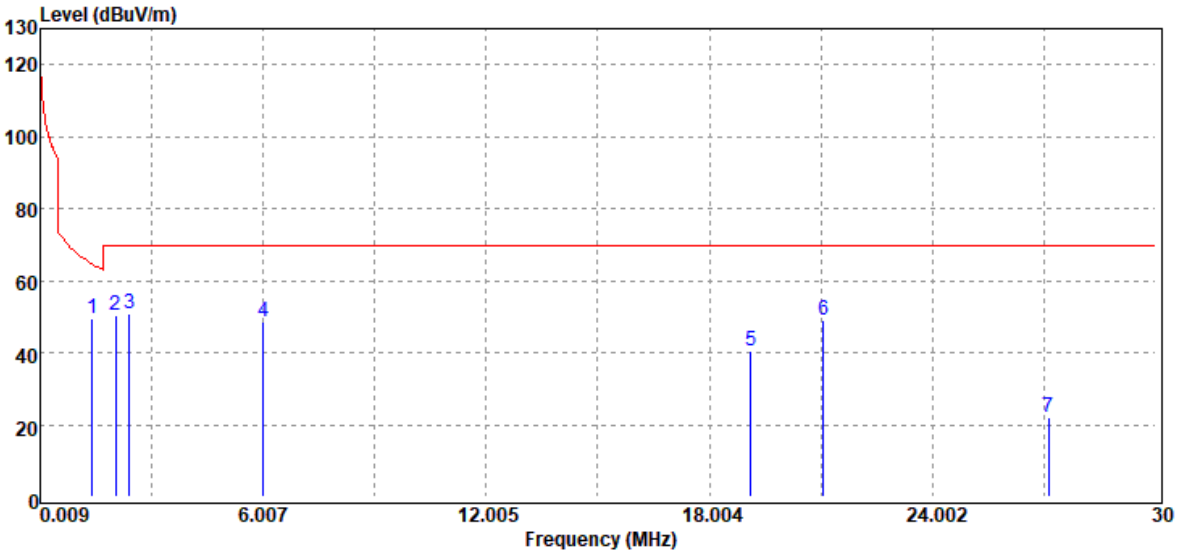

Freq. MHz	Detector Mode PK/QP/AV	Spectrum Reading Level dBµV	Factor dB	Actual FS dBµV/m	Limit @3m dBµV/m	Margin dB
1.42	Peak	38.00	11.39	49.39	64.57	-15.18
2.05	Peak	39.32	11.25	50.57	69.54	-18.97
2.41	Peak	39.72	11.19	50.91	69.54	-18.63
6.01	Peak	37.22	11.40	48.62	69.54	-20.92
19.11	Peak	28.75	11.57	40.32	69.54	-29.22
21.06	Peak	37.76	11.23	48.99	69.54	-20.55
27.12	Peak	12.33	9.81	22.14	69.54	-47.40

Unless otherwise stated the results shown in this test report refer only to the sample(s) tested and such sample(s) are retained for 90 days only.
除非另有說明，此報告結果僅對測試之樣品負責，同時此樣品僅保留90天。本報告未經本公司書面許可，不可部份複製。
This document is issued by the Company subject to its General Conditions of Service printed overleaf, available on request or accessible at http://www.sgs.com.tw/Terms-and-Conditions and for electronic format documents, subject to Terms and Conditions for Electronic Documents at http://www.sgs.com.tw/Terms-and-Conditions. Attention is drawn to the limitation of liability, indemnification and jurisdiction issues defined therein. Any holder of this document is advised that information contained hereon reflects the Company's findings at the time of its intervention only and within the limits of Client's instructions, if any. The Company's sole responsibility is to its Client and this document does not exonerate parties to a transaction from exercising all their rights and obligations under the transaction documents. This document cannot be reproduced except in full, without prior written approval of the Company. Any unauthorized alteration, forgery or falsification of the content or appearance of this document is unlawful and offenders may be prosecuted to the fullest extent of the law.

Report Number	:ER/2021/20009	Test Site	:SAC I Chamber
Operation Mode	:NFC	Test Date	:2021-02-20
Test Frequency	:13.56 MHz	Temp./Humi.	:22.1/45
Test Mode	:TX	Antenna Pol.	:VERTICAL
EUT Pol	:H Plane	Engineer	:Neo Tsai

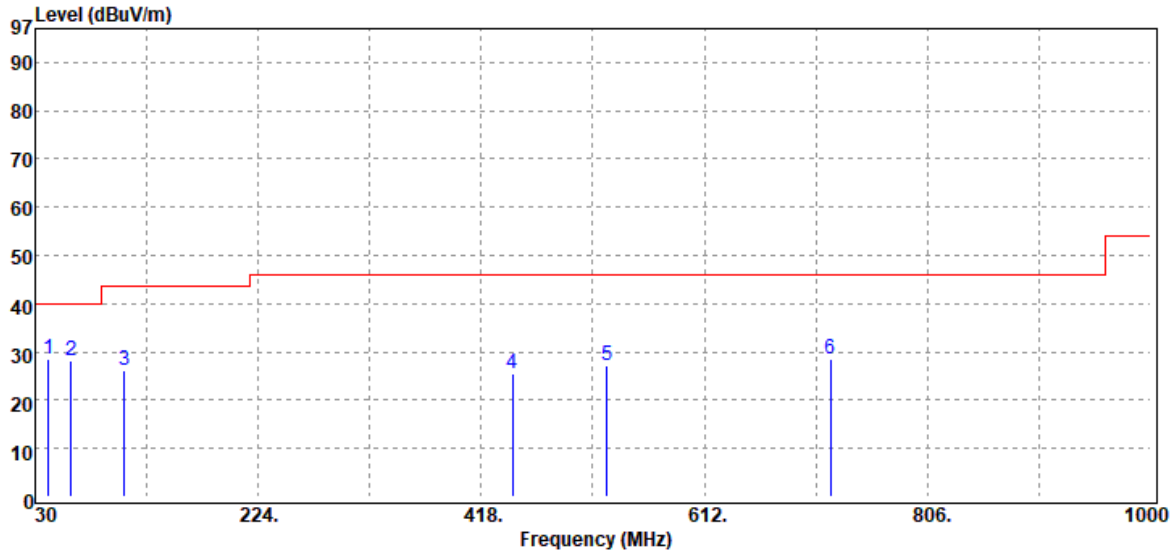

Freq. MHz	Detector Mode PK/QP/AV	Spectrum Reading Level dBμV	Factor dB	Actual FS dBμV/m	Limit @3m dBμV/m	Margin dB
41.64	Peak	39.52	-11.14	28.38	40.00	-11.62
61.04	Peak	46.28	-17.98	28.30	40.00	-11.70
107.60	Peak	38.78	-12.54	26.24	43.50	-17.26
445.16	Peak	31.82	-6.22	25.60	46.00	-20.40
527.61	Peak	32.16	-4.94	27.22	46.00	-18.78
721.61	Peak	32.17	-3.61	28.56	46.00	-17.44

Unless otherwise stated the results shown in this test report refer only to the sample(s) tested and such sample(s) are retained for 90 days only.
除非另有說明，此報告結果僅對測試之樣品負責，同時此樣品僅保留90天。本報告未經本公司書面許可，不可部份複製。
This document is issued by the Company subject to its General Conditions of Service printed overleaf, available on request or accessible at http://www.sgs.com.tw/Terms-and-Conditions and for electronic format documents, subject to Terms and Conditions for Electronic Documents at http://www.sgs.com.tw/Terms-and-Conditions. Attention is drawn to the limitation of liability, indemnification and jurisdiction issues defined therein. Any holder of this document is advised that information contained hereon reflects the Company's findings at the time of its intervention only and within the limits of Client's instructions, if any. The Company's sole responsibility is to its Client and this document does not exonerate parties to a transaction from exercising all their rights and obligations under the transaction documents. This document cannot be reproduced except in full, without prior written approval of the Company. Any unauthorized alteration, forgery or falsification of the content or appearance of this document is unlawful and offenders may be prosecuted to the fullest extent of the law.

Report Number	:ER/2021/20009	Test Site	:SAC I Chamber
Operation Mode	:NFC	Test Date	:2021-02-20
Test Frequency	:13.56 MHz	Temp./Humi.	:22.1/45
Test Mode	:TX	Antenna Pol.	:HORIZONTAL
EUT Pol	:H Plane	Engineer	:Neo Tsai

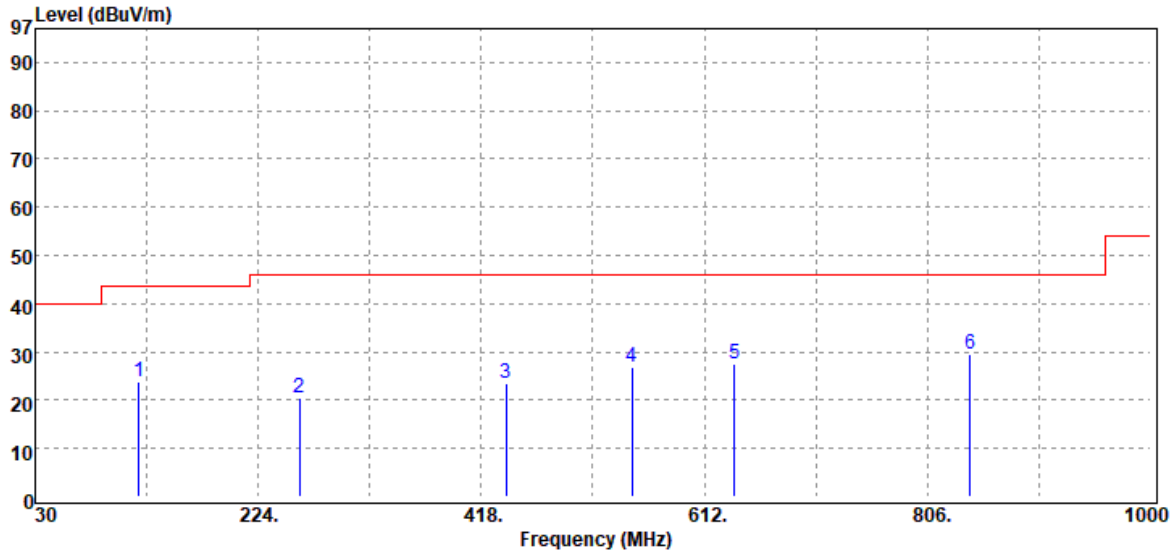

Freq. MHz	Detector Mode PK/QP/AV	Spectrum Reading Level dBµV	Factor dB	Actual FS dBµV/m	Limit @3m dBµV/m	Margin dB
120.21	Peak	35.53	-11.73	23.80	43.50	-19.70
259.89	Peak	29.20	-8.73	20.47	46.00	-25.53
439.34	Peak	29.96	-6.54	23.42	46.00	-22.58
548.95	Peak	30.52	-3.65	26.87	46.00	-19.13
638.19	Peak	30.83	-3.37	27.46	46.00	-18.54
842.86	Peak	30.45	-0.78	29.67	46.00	-16.33

Unless otherwise stated the results shown in this test report refer only to the sample(s) tested and such sample(s) are retained for 90 days only.
除非另有說明，此報告結果僅對測試之樣品負責，同時此樣品僅保留90天。本報告未經本公司書面許可，不可部份複製。
This document is issued by the Company subject to its General Conditions of Service printed overleaf, available on request or accessible at http://www.sgs.com.tw/Terms-and-Conditions and for electronic format documents, subject to Terms and Conditions for Electronic Documents at http://www.sgs.com.tw/Terms-and-Conditions. Attention is drawn to the limitation of liability, indemnification and jurisdiction issues defined therein. Any holder of this document is advised that information contained hereon reflects the Company's findings at the time of its intervention only and within the limits of Client's instructions, if any. The Company's sole responsibility is to its Client and this document does not exonerate parties to a transaction from exercising all their rights and obligations under the transaction documents. This document cannot be reproduced except in full, without prior written approval of the Company. Any unauthorized alteration, forgery or falsification of the content or appearance of this document is unlawful and offenders may be prosecuted to the fullest extent of the law.

8 FREQUENCY STABILITY

8.1 Applicable Standard

The frequency tolerance of the carrier signal shall be maintained within +/- 0.01% of the operating frequency over a temperature variation of -20 degrees to +50 degrees C at normal supply voltage, and for a variation in the primary supply voltage from 85% to 115% of the rated supply voltage at a temperature of 20 degrees C. For battery operated equipment, the equipment tests shall be performed using a new battery.

Carrier frequency stability shall be maintained to ±0.01% (±100 ppm).
For licence-exempt radio apparatus, the frequency stability shall be measured at temperatures of -20°C (-4°F), +20°C (+68°F) and +50°C (+122°F).

8.2 Measurement Procedure

1. The EUT was placed on a turn table which is 0.8m above ground plane.
2. Set EUT as normal operation
3. Set SPA Center Frequency = fundamental frequency, RBW, VBW= 10kHz, Span =100kHz.
4. Set SPA Max hold. Mark peak.

8.3 Test SET-UP (Block Diagram of Configuration)

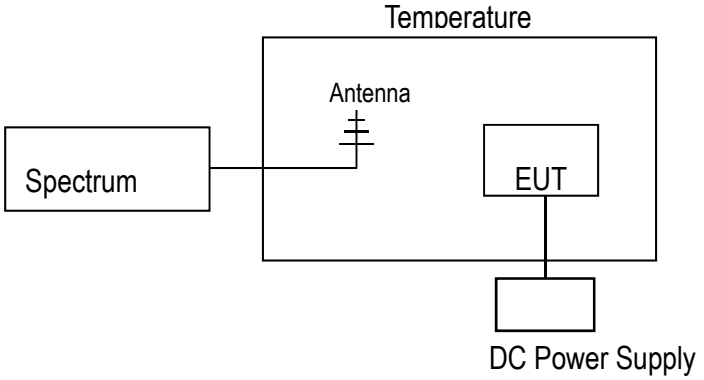

8.4 Measurement Equipment Used:

Conducted Emission Test Site: Conducted 1					
EQUIPMENT TYPE	MFR	MODEL NUMBER	SERIAL NUMBER	LAST CAL.	CAL DUE.
Loop Antenna	ETS.LINDGREN	6502	148045	10/19/2020	10/18/2021
EXA Spectrum Analyzer	KEYSIGHT	N9010A	MY54200716	04/01/2020	03/31/2021

Unless otherwise stated the results shown in this test report refer only to the sample(s) tested and such sample(s) are retained for 90 days only.
除非另有說明，此報告結果僅對測試之樣品負責，同時此樣品僅保留90天。本報告未經本公司書面許可，不可部份複製。
This document is issued by the Company subject to its General Conditions of Service printed overleaf, available on request or accessible at http://www.sgs.com.tw/Terms-and-Conditions and for electronic format documents, subject to Terms and Conditions for Electronic Documents at http://www.sgs.com.tw/Terms-and-Conditions. Attention is drawn to the limitation of liability, indemnification and jurisdiction issues defined therein. Any holder of this document is advised that information contained hereon reflects the Company's findings at the time of its intervention only and within the limits of Client's instructions, if any. The Company's sole responsibility is to its Client and this document does not exonerate parties to a transaction from exercising all their rights and obligations under the transaction documents. This document cannot be reproduced except in full, without prior written approval of the Company. Any unauthorized alteration, forgery or falsification of the content or appearance of this document is unlawful and offenders may be prosecuted to the fullest extent of the law.

8.5 Measurement Results

Startup

A. 溫度變化

Power Supply Vdc	Environment Temperature (℃)	Frequency (MHz)	Delta (Hz)	Limit (KHz)
3.87	-20	13.5599963	-0.50	+/- 1.356
3.87	-10	13.5599944	1.40	+/- 1.356
3.87	0	13.5599968	-1.00	+/- 1.356
3.87	10	13.5600028	-7.00	+/- 1.356
3.87	20	13.5599958	0.00	+/- 1.356
3.87	30	13.5599909	4.90	+/- 1.356
3.87	40	13.5599963	-0.50	+/- 1.356
3.87	50	13.5599999	-4.10	+/- 1.356

B. 電壓變化

Power Supply Vdc	Environment Temperature (℃)	Frequency (MHz)	Delta (Hz)	Limit (KHz)
4.45	20	13.5599911	13.90	+/- 1.356
3.87	20	13.560005	0.00	+/- 1.356
3	20	13.5599941	10.90	+/- 1.356

Unless otherwise stated the results shown in this test report refer only to the sample(s) tested and such sample(s) are retained for 90 days only.
除非另有說明，此報告結果僅對測試之樣品負責，同時此樣品僅保留90天。本報告未經本公司書面許可，不可部份複製。
This document is issued by the Company subject to its General Conditions of Service printed overleaf, available on request or accessible at http://www.sgs.com.tw/Terms-and-Conditions and for electronic format documents, subject to Terms and Conditions for Electronic Documents at http://www.sgs.com.tw/Terms-and-Conditions. Attention is drawn to the limitation of liability, indemnification and jurisdiction issues defined therein. Any holder of this document is advised that information contained hereon reflects the Company's findings at the time of its intervention only and within the limits of Client's instructions, if any. The Company's sole responsibility is to its Client and this document does not exonerate parties to a transaction from exercising all their rights and obligations under the transaction documents. This document cannot be reproduced except in full, without prior written approval of the Company. Any unauthorized alteration, forgery or falsification of the content or appearance of this document is unlawful and offenders may be prosecuted to the fullest extent of the law.

2 minutes

A. 溫度變化

Power Supply	Environment	Frequency	Delta (Hz)	Limit (KHz)
Vdc	Temperature (℃)	(MHz)		
3.87	-20	13.5600027	-4.40	+/- 1.356
3.87	-10	13.5599946	3.70	+/- 1.356
3.87	0	13.5599992	-0.90	+/- 1.356
3.87	10	13.5599938	4.50	+/- 1.356
3.87	20	13.5599983	0.00	+/- 1.356
3.87	30	13.5599997	-1.40	+/- 1.356
3.87	40	13.5600086	-10.30	+/- 1.356
3.87	50	13.5599979	0.40	+/- 1.356

B. 電壓變化

Power Supply	Environment	Frequency	Delta (Hz)	Limit (KHz)
Vdc	Temperature (℃)	(MHz)		
4.45	20	13.5600021	4.20	+/- 1.356
3.87	20	13.5600063	0.00	+/- 1.356
3	20	13.5600032	3.10	+/- 1.356

Unless otherwise stated the results shown in this test report refer only to the sample(s) tested and such sample(s) are retained for 90 days only.
除非另有說明，此報告結果僅對測試之樣品負責，同時此樣品僅保留90天。本報告未經本公司書面許可，不可部份複製。
This document is issued by the Company subject to its General Conditions of Service printed overleaf, available on request or accessible at http://www.sgs.com.tw/Terms-and-Conditions and for electronic format documents, subject to Terms and Conditions for Electronic Documents at http://www.sgs.com.tw/Terms-and-Conditions. Attention is drawn to the limitation of liability, indemnification and jurisdiction issues defined therein. Any holder of this document is advised that information contained hereon reflects the Company's findings at the time of its intervention only and within the limits of Client's instructions, if any. The Company's sole responsibility is to its Client and this document does not exonerate parties to a transaction from exercising all their rights and obligations under the transaction documents. This document cannot be reproduced except in full, without prior written approval of the Company. Any unauthorized alteration, forgery or falsification of the content or appearance of this document is unlawful and offenders may be prosecuted to the fullest extent of the law.

5 minutes

A. 溫度變化

Power Supply Vdc	Environment Temperature (℃)	Frequency (MHz)	Delta (Hz)	Limit (KHz)
3.87	-20	13.5599938	16.10	+/- 1.356
3.87	-10	13.5599953	14.60	+/- 1.356
3.87	0	13.5599923	17.60	+/- 1.356
3.87	10	13.5599928	17.10	+/- 1.356
3.87	20	13.5600099	0.00	+/- 1.356
3.87	30	13.5599926	17.30	+/- 1.356
3.87	40	13.5599992	10.70	+/- 1.356
3.87	50	13.5599971	12.80	+/- 1.356

B. 電壓變化

Power Supply Vdc	Environment Temperature (℃)	Frequency (MHz)	Delta (Hz)	Limit (KHz)
4.45	20	13.5599972	-5.60	+/- 1.356
3.87	20	13.5599916	0.00	+/- 1.356
3	20	13.5599903	1.30	+/- 1.356

Unless otherwise stated the results shown in this test report refer only to the sample(s) tested and such sample(s) are retained for 90 days only.
除非另有說明，此報告結果僅對測試之樣品負責，同時此樣品僅保留90天。本報告未經本公司書面許可，不可部份複製。
This document is issued by the Company subject to its General Conditions of Service printed overleaf, available on request or accessible at http://www.sgs.com.tw/Terms-and-Conditions and for electronic format documents, subject to Terms and Conditions for Electronic Documents at http://www.sgs.com.tw/Terms-and-Conditions. Attention is drawn to the limitation of liability, indemnification and jurisdiction issues defined therein. Any holder of this document is advised that information contained hereon reflects the Company's findings at the time of its intervention only and within the limits of Client's instructions, if any. The Company's sole responsibility is to its Client and this document does not exonerate parties to a transaction from exercising all their rights and obligations under the transaction documents. This document cannot be reproduced except in full, without prior written approval of the Company. Any unauthorized alteration, forgery or falsification of the content or appearance of this document is unlawful and offenders may be prosecuted to the fullest extent of the law.

10 minutes

A. 溫度變化

Power Supply	Environment	Frequency	Delta (Hz)	Limit (KHz)
Vdc	Temperature (℃)	(MHz)		
3.87	-20	13.5600057	-0.20	+/- 1.356
3.87	-10	13.5599986	6.90	+/- 1.356
3.87	0	13.5600067	-1.20	+/- 1.356
3.87	10	13.5599985	7.00	+/- 1.356
3.87	20	13.5600055	0.00	+/- 1.356
3.87	30	13.5599944	11.10	+/- 1.356
3.87	40	13.5600084	-2.90	+/- 1.356
3.87	50	13.5600073	-1.80	+/- 1.356

B. 電壓變化

Power Supply	Environment	Frequency	Delta (Hz)	Limit (KHz)
Vdc	Temperature (℃)	(MHz)		
4.45	20	13.5599949	3.50	+/- 1.356
3.87	20	13.5599984	0.00	+/- 1.356
3	20	13.5599983	0.10	+/- 1.356

Unless otherwise stated the results shown in this test report refer only to the sample(s) tested and such sample(s) are retained for 90 days only.
除非另有說明，此報告結果僅對測試之樣品負責，同時此樣品僅保留90天。本報告未經本公司書面許可，不可部份複製。
This document is issued by the Company subject to its General Conditions of Service printed overleaf, available on request or accessible at http://www.sgs.com.tw/Terms-and-Conditions and for electronic format documents, subject to Terms and Conditions for Electronic Documents at http://www.sgs.com.tw/Terms-and-Conditions. Attention is drawn to the limitation of liability, indemnification and jurisdiction issues defined therein. Any holder of this document is advised that information contained hereon reflects the Company's findings at the time of its intervention only and within the limits of Client's instructions, if any. The Company's sole responsibility is to its Client and this document does not exonerate parties to a transaction from exercising all their rights and obligations under the transaction documents. This document cannot be reproduced except in full, without prior written approval of the Company. Any unauthorized alteration, forgery or falsification of the content or appearance of this document is unlawful and offenders may be prosecuted to the fullest extent of the law.

9 EMISSION BANDWIDTH MEASUREMENT

9.1 Applicable Standard:

The 20 dB and 99% bandwidth shall be specified in operating frequency band.

9.2 Limit:

None

9.3 Test Set-up

Refer to section 8.3 in this report

9.4 Measurement Equipment Used:

Refer to section 8.4 in this report

9.5 Measurement Procedure

1. Placed the EUT on the testing table.
2. Set the EUT under transmission condition continuously at specific channel frequency.
3. The resolution bandwidth of 1 kHz and the video bandwidth of 3 kHz were used.
4. Measured the spectrum width with power higher than 20dB below carrier.

9.6 Measurement Result

FCC

20dB BW (kHz)
2.697

Opration range	Frequency (MHz)	Limit (MHz)
Low	13.55925	>13.11
High	13.56170	<14.01

IC

99% BW (kHz)
2.314

Unless otherwise stated the results shown in this test report refer only to the sample(s) tested and such sample(s) are retained for 90 days only.
除非另有說明，此報告結果僅對測試之樣品負責，同時此樣品僅保留90天。本報告未經本公司書面許可，不可部份複製。
This document is issued by the Company subject to its General Conditions of Service printed overleaf, available on request or accessible at http://www.sgs.com.tw/Terms-and-Conditions and for electronic format documents, subject to Terms and Conditions for Electronic Documents at http://www.sgs.com.tw/Terms-and-Conditions. Attention is drawn to the limitation of liability, indemnification and jurisdiction issues defined therein. Any holder of this document is advised that information contained hereon reflects the Company's findings at the time of its intervention only and within the limits of Client's instructions, if any. The Company's sole responsibility is to its Client and this document does not exonerate parties to a transaction from exercising all their rights and obligations under the transaction documents. This document cannot be reproduced except in full, without prior written approval of the Company. Any unauthorized alteration, forgery or falsification of the content or appearance of this document is unlawful and offenders may be prosecuted to the fullest extent of the law.

Bandwidth

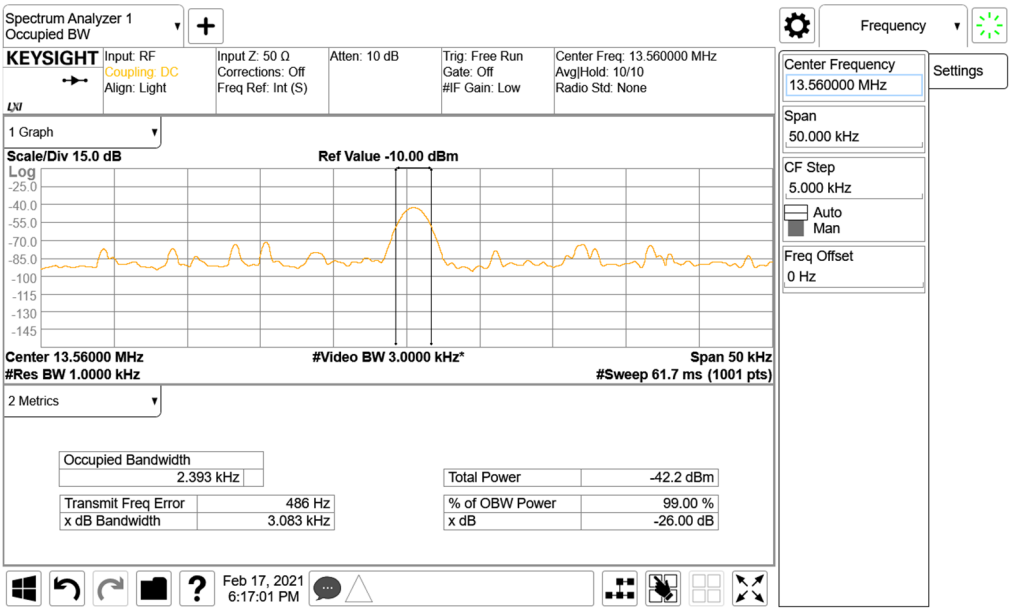

Operation range low

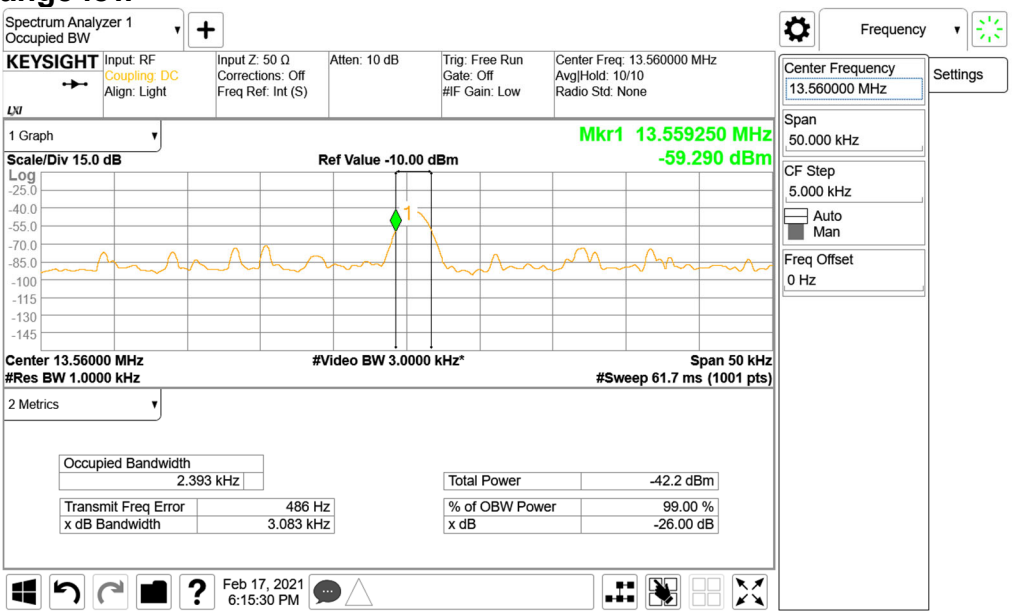

Unless otherwise stated the results shown in this test report refer only to the sample(s) tested and such sample(s) are retained for 90 days only.
除非另有說明，此報告結果僅對測試之樣品負責，同時此樣品僅保留90天。本報告未經本公司書面許可，不可部份複製。
This document is issued by the Company subject to its General Conditions of Service printed overleaf, available on request or accessible at http://www.sgs.com.tw/Terms-and-Conditions and for electronic format documents, subject to Terms and Conditions for Electronic Documents at http://www.sgs.com.tw/Terms-and-Conditions. Attention is drawn to the limitation of liability, indemnification and jurisdiction issues defined therein. Any holder of this document is advised that information contained hereon reflects the Company's findings at the time of its intervention only and within the limits of Client's instructions, if any. The Company's sole responsibility is to its Client and this document does not exonerate parties to a transaction from exercising all their rights and obligations under the transaction documents. This document cannot be reproduced except in full, without prior written approval of the Company. Any unauthorized alteration, forgery or falsification of the content or appearance of this document is unlawful and offenders may be prosecuted to the fullest extent of the law.

Operation range High

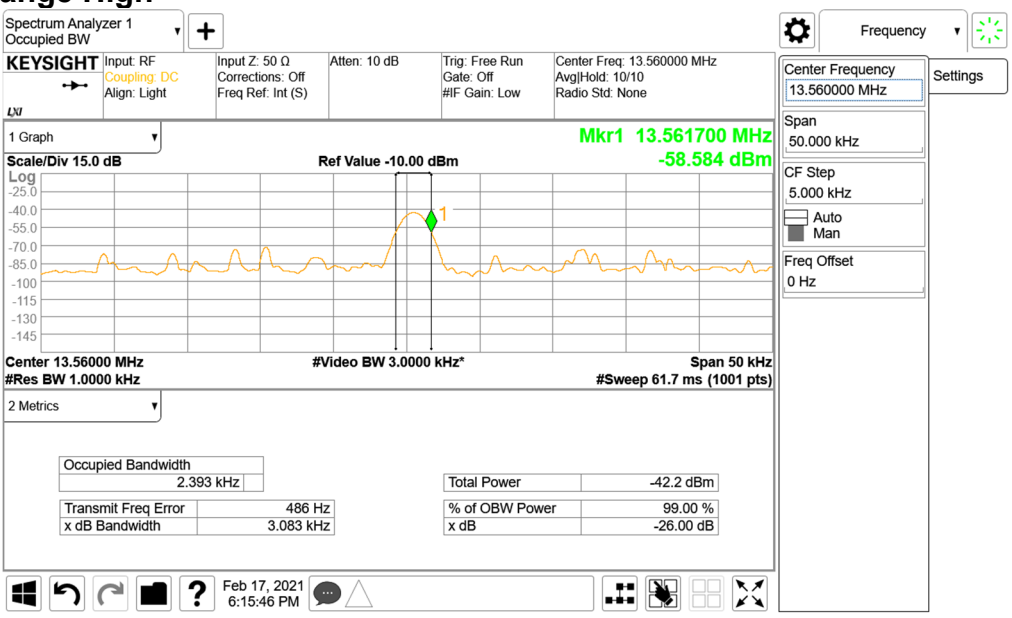

Unless otherwise stated the results shown in this test report refer only to the sample(s) tested and such sample(s) are retained for 90 days only.
除非另有說明，此報告結果僅對測試之樣品負責，同時此樣品僅保留90天。本報告未經本公司書面許可，不可部份複製。
This document is issued by the Company subject to its General Conditions of Service printed overleaf, available on request or accessible at http://www.sgs.com.tw/Terms-and-Conditions and for electronic format documents, subject to Terms and Conditions for Electronic Documents at http://www.sgs.com.tw/Terms-and-Conditions. Attention is drawn to the limitation of liability, indemnification and jurisdiction issues defined therein. Any holder of this document is advised that information contained hereon reflects the Company's findings at the time of its intervention only and within the limits of Client's instructions, if any. The Company's sole responsibility is to its Client and this document does not exonerate parties to a transaction from exercising all their rights and obligations under the transaction documents. This document cannot be reproduced except in full, without prior written approval of the Company. Any unauthorized alteration, forgery or falsification of the content or appearance of this document is unlawful and offenders may be prosecuted to the fullest extent of the law.

10 ANTENNA REQUIREMENT

10.1 Standard Applicable:

For intentional device, according to §15.203, an intentional radiator shall be designed to ensure that no antenna other than furnished by the responsible party shall be used with the device.

10.2 Antenna Connected Construction:

The antenna is designed as permanently attached and no consideration of replacement. Please see EUT photo for details.

~ End of Report ~

Unless otherwise stated the results shown in this test report refer only to the sample(s) tested and such sample(s) are retained for 90 days only.
除非另有說明，此報告結果僅對測試之樣品負責，同時此樣品僅保留90天。本報告未經本公司書面許可，不可部份複製。
This document is issued by the Company subject to its General Conditions of Service printed overleaf, available on request or accessible at http://www.sgs.com.tw/Terms-and-Conditions and for electronic format documents, subject to Terms and Conditions for Electronic Documents at http://www.sgs.com.tw/Terms-and-Conditions. Attention is drawn to the limitation of liability, indemnification and jurisdiction issues defined therein. Any holder of this document is advised that information contained hereon reflects the Company's findings at the time of its intervention only and within the limits of Client's instructions, if any. The Company's sole responsibility is to its Client and this document does not exonerate parties to a transaction from exercising all their rights and obligations under the transaction documents. This document cannot be reproduced except in full, without prior written approval of the Company. Any unauthorized alteration, forgery or falsification of the content or appearance of this document is unlawful and offenders may be prosecuted to the fullest extent of the law.
SGS Taiwan Ltd. 台灣檢驗科技股份有限公司
No.134,Wu Kung Road, New Taipei Industrial Park, Wuku District, New Taipei City, Taiwan/新北市五股區新北產業園區五工路134號
t (886-2) 2299-3279 f (886-2) 2298-0488 www.sgs.com.tw
Member of SGS Group