FCC SAR Test Report

APPLICANT	:	**ASUSTeK COMPUTER INC.**
EQUIPMENT	:	**ASUS VivoTab**
BRAND NAME	:	**ASUS**
MODEL NAME	:	**K0Y**
FCC ID	:	**MSQK0Y**
STANDARD	:	**FCC 47 CFR Part 2 (2.1093)** **ANSI/IEEE C95.1-1992** **IEEE 1528-2003** **FCC OET Bulletin 65 Supplement C (Edition 01-01)**

The product was completely tested on Nov. 24, 2012. We, SPORTON INTERNATIONAL INC., would like to declare that the tested sample has been evaluated in accordance with the procedures and shown the compliance with the applicable technical standards.

The test results in this report apply exclusively to the tested model / sample. Without written approval of SPORTON INTERNATIONAL INC., the test report shall not be reproduced except in full.

Reviewed by:

Jones Tsai / Manager

Testing Laboratory
1190

Table of Contents

1. Statement of Compliance 4
2. Administration Data 5
2.1 Testing Laboratory 5
2.2 Applicant 5
2.3 Manufacturer 5
2.4 Application Details 5
3. General Information 6
3.1 Description of Equipment Under Test (EUT) 6
3.2 Maximum RF output power among production units 7
3.3 Product Photos 12
3.4 Applied Standard 12
3.5 Device Category and SAR Limits 12
3.6 Test Conditions 12
4. Specific Absorption Rate (SAR) 15
4.1 Introduction 15
4.2 SAR Definition 15
5. SAR Measurement System 16
5.1 E-Field Probe 17
5.2 Data Acquisition Electronics (DAE) 17
5.3 Robot 18
5.4 Measurement Server 18
5.5 Phantom 19
5.6 Device Holder 20
5.7 Data Storage and Evaluation 21
5.8 Test Equipment List 23
6. Tissue Simulating Liquids 24
7. SAR System Verification 26
7.1 Purpose of System Performance check 26
7.2 System Setup 26
7.3 SAR System Verification Results 27
8. EUT Testing Position 27
9. Measurement Procedures 28
9.1 Spatial Peak SAR Evaluation 28
9.2 Area & Zoom Scan Procedures 29
9.3 Volume Scan Procedures 30
9.4 SAR Averaged Methods 30
9.5 Power Drift Monitoring 30
10. SAR Testing Positions 31
10.1 Exposure Positions Consideration 31
10.2 Conducted RF Output Power (Unit: dBm) 33
11. SAR Test Results 49
11.1 Test Records for Body SAR Test 49
11.2 Repeated SAR Measurement 54
11.3 Highest SAR Plot 55
11.4 Simultaneous Transmission SAR Analysis and Measurements 64
11.5 Simultaneous analysis - SPLSR calculation 67
12. Uncertainty Assessment 71
13. References 73

Appendix A. Plots of System Performance Check
Appendix B. Plots of SAR Measurement
Appendix C. DASY Calibration Certificate
Appendix D. Product Photos
Appendix E. Test Setup Photos

Revision History

REPORT NO.	VERSION	DESCRIPTION	ISSUED DATE
FA2O2430	Rev. 01	Initial issue of report	Dec. 19, 2012

1. Statement of Compliance

The maximum results of Specific Absorption Rate (SAR) found during testing for **ASUSTeK COMPUTER INC., ASUS VivoTab Smart, K0Y**, are as follows.

Please use 2 digits only

Frequency Band	Exposure Position	Highest Reported 1g-SAR (W/kg)	Equipment Class	Highest Reported 1g-SAR (W/kg)
GSM 850	Body (0 cm Gap)	1.13	PCB	1.39
GSM 1900	Body (0 cm Gap)	1.03		
WCDMA Band 2	Body (0 cm Gap)	1.06		
WCDMA Band 5	Body (1.1 cm Gap)	1.30		
WCDMA Band 4	Body (0 cm Gap)	1.25		
LTE Band 2	Body (0 cm Gap)	1.28		
LTE Band 4	Body (0 cm Gap)	1.39		
LTE Band 5	Body (0 cm Gap)	0.62		
LTE Band 17	Body (0 cm Gap)	0.55		
WLAN 2412 - 2462 MHz	Body (0 cm Gap)	1.11	DTS	1.11

Frequency Band	Exposure Position	Highest Reported Simultaneous Transmission 1g-SAR (W/kg)
WCDMA IV	Body (0 cm Gap)	1.59
WLAN 2412 - 2462 MHz		

Remark:

The highest simultaneous transmission reported SAR is scalar SAR summation per FCC KDB 690873 D01 v01r02. Simultaneous transmission SAR measurement is exempted according to the SPLSR analysis per KDB 447498 D01v05.

This device is in compliance with Specific Absorption Rate (SAR) for general population/uncontrolled exposure limits (1.6 W/kg) specified in FCC 47 CFR part 2 (2.1093) and ANSI/IEEE C95.1-1992, and had been tested in accordance with the measurement methods and procedures specified in IEEE 1528-2003 and FCC OET Bulletin 65 Supplement C (Edition 01-01).

2. Administration Data

2.1 Testing Laboratory

Test Site	SPORTON INTERNATIONAL INC.
Test Site Location	No. 52, Hwa Ya 1st Rd., Hwa Ya Technology Park, Kwei-Shan Hsiang, Tao Yuan Hsien, Taiwan, R.O.C. TEL: +886-3-327-3456 FAX: +886-3-328-4978

2.2 Applicant

Company Name	ASUSTeK COMPUTER INC.
Address	4F, No. 150, Li-Te Rd., Peitou, Taipei, Taiwan

2.3 Manufacturer

Company Name	Tech-Com(Shanghai) Computer Co.Ltd
Address	No.68 Sanzhuang Road, Songjiang Exprot Processing.

2.4 Application Details

Date of Start during the Test	Nov. 20, 2012
Date of End during the Test	Nov. 24, 2012

3. General Information

3.1 Description of Equipment Under Test (EUT)

Product Feature & Specification	
EUT	ASUS VivoTab
Brand Name	ASUS
Model Name	K0Y
FCC ID	MSQK0Y
Tx Frequency	GSM850: 824.2 MHz ~ 848.8 MHz GSM1900: 1850.2 MHz ~ 1909.8 MHz WCDMA Band V: 826.4 MHz ~ 846.6 MHz WCDMA Band II: 1852.4 MHz ~ 1907.6 MHz WCDMA Band IV: 1712.4 MHz ~ 1752.6 MHz LTE Band 17: 706.5 MHz ~ 713.5 MHz LTE Band 5: 826.5 ~ 846.5 MHz LTE Band 4: 1710.7 MHz ~ 1754.3 MHz LTE Band 2: 1852.5 MHz ~ 1907.5 MHz WLAN2.4G: 2412 MHz ~ 2462 MHz Bluetooth: 2402 MHz ~ 2480 MHz NFC : 13.56 MHz
Measured Maximum Average Output Power to Antenna	GSM850: 32.88 dBm GSM1900: 29.03 dBm WCDMA Band V: 23.39 dBm WCDMA Band II: 22.12 dBm WCDMA Band IV: 22.51 dBm LTE Band 17: 22.46 dBm LTE Band 5: 23.19 dBm LTE Band 4: 21.96 dBm LTE Band 2: 22.88 dBm 802.11b: 12.92 dBm 802.11g: 12.27 dBm 802.11n-HT20 (2.4GHz): 12.14 dBm Bluetooth: 0.236 dBm
Antenna Type	WWAN: PCB Antenna WLAN: PIFA Antenna Bluetooth: PIFA Antenna NFC: Loop Antenna
Uplink Modulations	GPRS: GMSK EDGE: GMSK / 8PSK WCDMA (Rel 99): QPSK HSDPA (Rel 6): QPSK HSUPA (Rel 6): QPSK LTE: QPSK / 16QAM 802.11b: DSSS (DBPSK / DQPSK / CCK) 802.11a/g/n : OFDM (BPSK / QPSK / 16QAM / 64QAM) Bluetooth : GFSK Bluetooth EDR : π/4-DQPSK, 8-DPSK Bluetooth v4.0+LE: GFSK NFC: ASK
EUT Stage	Production Unit
Remark: 1. Voice call over circuit-switched domain of WWAN is not supported 2. The above EUT's information was declared by manufacturer. Please refer to the specifications or user's manual for more detailed description.	

3.2 Maximum RF output power among production units

Band	GSM 850		GSM 1900	
Output Power Status	Normal	Reduced	Normal	Reduced
GPRS/EDGE (GMSK, 1 Tx slot)	33	30	29.5	23.5
GPRS/EDGE (GMSK, 2 Tx slots)	31	28	29	21.5
EDGE (8PSK, 1 Tx slot)	26.5	23.5	25	20
EDGE (8PSK, 2 Tx slots)	26.5	23.5	25	20

Band	WCDMA Band V		WCDMA Band II		WCDMA Band IV	
Output Power Status	Normal	Reduced	Normal	Reduced	Normal	Reduced
RMC 12.2K	24	20	23	15.5	23	14.5
HSDPA Subtest-1	24	20	23	15.5	23	14.5
HSUPA Subtest-5	24	20	23	15.5	23	14.5

Remark: By design, HSPA RF output power will never exceed R99 maximum output power, detailed information is included in “tune-up procedure” exhibit

LTE Band 2					LTE Band 5				
Modulation	BW (MHz)	RB size	Normal	Reduced	Modulation	BW (MHz)	RB size	Normal	Reduced
QPSK	10	≤ 12	23	16	QPSK	10	≤ 12	23.5	18.5
QPSK	5	≤ 8	23	16	QPSK	5	≤ 8	23.5	18.5
QPSK	3	≤ 4	23	16	QPSK	3	≤ 4	23.5	18.5

LTE Band 4					LTE Band 17				
Modulation	BW (MHz)	RB size	Normal	Reduced	Modulation	BW (MHz)	RB size	Normal	Reduced
QPSK	10	≤ 12	23	15	QPSK	10	≤ 12	23.5	18.5
QPSK	5	≤ 8	23	15	QPSK	5	≤ 8	23.5	18.5

For Band 2:

Modulation	Channel bandwidth / Transmission bandwidth configuration [RB]			MPR Target (dB)			3GPP MPR (dB)
	3 MHz	5 MHz	10 MHz	3 MHz	5 MHz	10 MHz	
QPSK	> 4	> 8	> 12	1	1	1	≤ 1
16 QAM	≤ 4	≤ 8	≤ 12	1	1	1	≤ 1
16 QAM	> 4	> 8	> 12	2	2	2	≤ 2

For Band 4:

Modulation	Channel bandwidth / Transmission bandwidth configuration [RB]		MPR Target (dB)		3GPP MPR (dB)
	5 MHz	10 MHz	5 MHz	10 MHz	
QPSK	> 8	> 12	1	1	≤ 1
16 QAM	≤ 8	≤ 12	1	1	≤ 1
16 QAM	> 8	> 12	2	2	≤ 2

For Band 5:

Modulation	Channel bandwidth / Transmission bandwidth configuration [RB]			MPR Target (dB)			3GPP MPR (dB)
	3 MHz	5 MHz	10 MHz	3 MHz	5 MHz	10 MHz	
QPSK	> 4	> 8	> 12	1	1	1	≤ 1
16 QAM	≤ 4	≤ 8	≤ 12	1	1	1	≤ 1
16 QAM	> 4	> 8	> 12	2	2	2	≤ 2

For Band 17:

Modulation	Channel bandwidth / Transmission bandwidth configuration [RB]		MPR Target (dB)		3GPP MPR (dB)
	5 MHz	10 MHz	5 MHz	10 MHz	
QPSK	> 8	> 12	1	1	≤ 1
16 QAM	≤ 8	≤ 12	1	1	≤ 1
16 QAM	> 8	> 12	2	2	≤ 2

Remark:

1. By design, other RB configurations and higher-order modulation RF output power will never exceed maximum output power listed above, detailed information is included in “tune-up procedure” exhibit
2. LTE MPR implementation is the same for normal mode and power reduction mode

IEEE 802.11				
Mode/Band	a	b	g	n
2.4 GHz WiFi		13	12.5	12.5

Bluetooth				
Mode/Band	1Mbps (GMSK)	2Mbps (π/4-DQPSK)	3Mbps (8-DPSK)	BT4.0-LE (GMSK)
2.4 GHz Bluetooth	7.5	7.5	7.5	7.5

The table below summarized necessary items addressed in KDB 941225 D05 v01.

FCC ID	MSQK0Y
EUT	ASUS VivoTab
Operating Frequency Range of each LTE transmission band	Band 2 Tx: 1851.5 MHz ~ 1908.5 MHz Band 4: Tx: 1710.7 MHz ~ 1754.3 MHz Band 5 Tx: 826.5 ~ 846.5 MHz Band 17: Tx: 706.5 MHz ~ 713.5 MHz
Channel Bandwidth	Band 2: 3MHz, 5MHz, 10MHz Band 4: 5MHz, 10MHz Band 5: 3MHz, 5MHz, 10MHz Band 17: 5MHz, 10MHz

Transmission (H, M, L) channel numbers and frequencies in each LTE band

Band 2

	Bandwidth 3 MHz		Bandwidth 5 MHz		Bandwidth 10 MHz	
	Channel #	Frequency (MHz)	Channel #	Frequency (MHz)	Channel #	Frequency (MHz)
L	18615	1851.5	18625	1852.5	18650	1855
M	18900	1880	18900	1880	18900	1880
H	19185	1908.5	19175	1907.5	19150	1905

Band 4

	Bandwidth 5 MHz		Bandwidth 10 MHz	
	Channel #	Frequency (MHz)	Channel #	Frequency (MHz)
L	19975	1712.5	20000	1715
M	20175	1732.5	20175	1732.5
H	20375	1752.5	20350	1750

Band 5

	Bandwidth 3 MHz		Bandwidth 5 MHz		Bandwidth 10 MHz	
	Channel #	Frequency (MHz)	Channel #	Frequency (MHz)	Channel #	Frequency (MHz)
L	20415	825.5	20425	826.5	20450	829
M	20525	836.5	20525	836.5	20525	836.5
H	20635	847.5	20625	846.5	20600	844

Band 17

	Bandwidth 5 MHz		Bandwidth 10 MHz	
	Channel #	Frequency (MHz)	Channel #	Frequency (MHz)
L	23755	706.5	23780	709
M	23790	710	23790	710
H	23825	713.5	23800	711

UE category, uplink modulations used	Category 3, QPSK, and 16QAM	
LTE transmitter and antenna implementation (standalone or sharing hardware components / antennas)	Main Antenna: LTE share the antenna with WCDMA	
LTE Voice / Data requirements	Data only	
LTE MPR permanently built-in by design	Yes	
LTE A-MPR	Disabled during SAR testing. NS value is set to NS_01 to disable A-MPR.	
Base station simulator used for Testing	Anritsu MT8820C	
Measured LTE maximum averaged conducted output power	LTE Band 17: 22.46 dBm LTE Band 5: 23.19 dBm LTE Band 4: 21.96 dBm LTE Band 2: 22.88 dBm	
Other U.S. wireless operating modes / bands	GSM	GSM850: Tx: 824.2 ~ 848.8 MHz GSM1900: Tx: 1850.2 ~ 1909.8 MHz
	WCDMA	Band V: Tx: 826.4 ~ 846.6 MHz Band II: Tx: 1852.4 ~ 1907.6 MHz Band IV: Tx: 1712.4 MHz ~ 1752.6 MHz
	NFC	13.56 MHz
Simultaneous transmission configurations	In Section 11.4	
Power reduction applied to satisfy SAR compliance	Yes, proximity sensor.	

3.3 Product Photos

Please refer to Appendix D.

3.4 Applied Standard

The Specific Absorption Rate (SAR) testing specification, method, and procedure for this device is in accordance with the following standards:

- FCC 47 CFR Part 2 (2.1093)
- ANSI/IEEE C95.1-1992
- IEEE 1528-2003
- FCC OET Bulletin 65 Supplement C (Edition 01-01)
- FCC KDB 447498 D01 v05
- FCC KDB 616217 D04 v01
- FCC KDB 941225 D01 v02
- FCC KDB 941225 D03 v01
- FCC KDB 941225 D05 v02
- FCC KDB 865664 D01 v01

3.5 Device Category and SAR Limits

This device belongs to portable device category because its radiating structure is allowed to be used within 20 centimeters of the body of the user. Limit for General Population/Uncontrolled exposure should be applied for this device, it is 1.6 W/kg as averaged over any 1 gram of tissue.

3.6 Test Conditions

3.6.1 Ambient Condition

Ambient Temperature	20 to 24 ℃
Humidity	< 60 %

3.6.2 Test Configuration

For WWAN SAR testing, the device was controlled by using a base station emulator. Communication between the device and the emulator was established by air link. The distance between the EUT and the antenna of the emulator is larger than 50 cm and the output power radiated from the emulator antenna is at least 30 dB smaller than the output power of EUT.

During WLAN SAR testing EUT is configured with the WLAN continuous TX tool, and the transmission duty factor was monitored on the spectrum analyzer with zero-span setting
Duty factor observed as below:
802.11b, 1Mbps: 100%

The EUT was set from the emulator to radiate maximum WWAN output power during all tests. For Bottom-Face and Edge1 testing at 0cm separation, the proximity sensor will activate the power reduction and the maximum power is limited at the pre-defined level implemented in this device. The power reduction values are same for Bottom-Face and Edge1.

Power reduction applied for each wireless mode and orientation

Exposure Position / wireless mode	GSM 850/1900	UMTS Band 2/4/5	LTE Band 2/4/5/17
Bottom Face	Yes	Yes	Yes
Edge 1	Yes	Yes	Yes
Edge 2	N/A	N/A	N/A
Edge 3	N/A	N/A	N/A
Edge 4	N/A	N/A	N/A

Remark:
1. Yes: Reduced maximum limit applied by activation of proximity sensor.
2. No: Normal output power without reduction
3. Power reduction is not applicable for WiFi and Bluetooth.

Band/Mode	Ch #	Measured power reduction (dBm)		Reduction Levels
		w/o power back-off	w/ power back-off	(dB)
GSM850 GPRS (GMSK 1 Tx slot) - CS1	189	32.85	29.55	3.30
GSM850 GPRS (GMSK 2 Tx slot) - CS1	189	30.44	27.67	2.77
GSM850 EDGE (8PSK 1 Tx slot) - MCS5	189	26.24	23.26	2.98
GSM850 EDGE (8PSK 2 Tx slot) - MCS5	189	26.16	23.22	2.94
GSM1900 GPRS (GMSK 1 Tx slot) - CS1	661	29.03	23.37	5.66
GSM1900 GPRS (GMSK 2 Tx slot) - CS1	661	27.33	20.96	6.37
GSM1900 EDGE (8PSK 1 Tx slot) - MCS5	661	24.82	19.63	5.19
GSM1900 EDGE (8PSK 2 Tx slot) - MCS5	661	24.72	19.55	5.17
WCDMA Band 5 (RMC 12.2Kbps)	4182	23.32	19.43	3.89
WCDMA Band 2 (RMC 12.2Kbps)	9400	22.02	15.34	6.68
WCDMA Band 4 (RMC 12.2Kbps)	1413	22.44	14.37	8.07
LTE Band 2 (QPSK 1RB, 24RB offset)	18900	22.88	15.99	6.89
LTE Band 4 (QPSK 1RB, 24RB offset)	20175	21.86	14.38	7.48
LTE Band 5 (QPSK 1RB, 24RB offset)	20525	23.05	18.15	4.90
LTE Band 17 (QPSK 1RB, 24RB offset)	23790	22.27	17.76	4.51

Proximity Sensor for Bottom Face detection	Proximity Sensor for Edge 1 detection

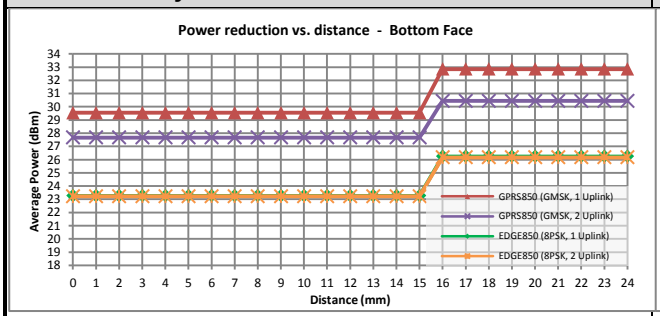

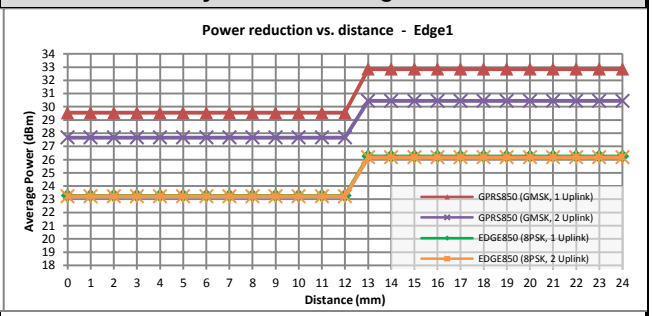

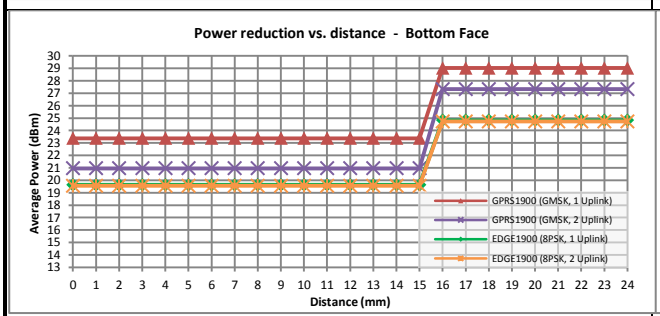

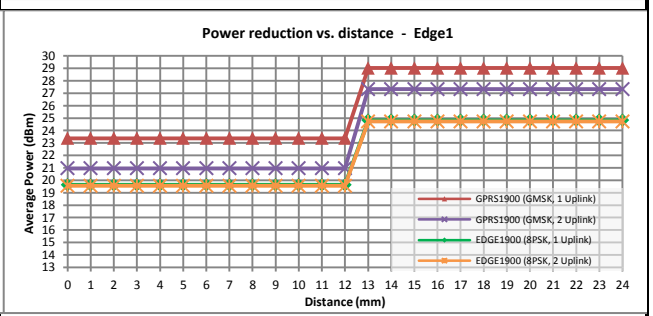

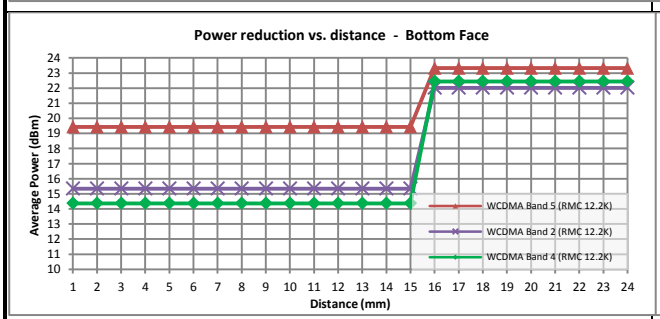

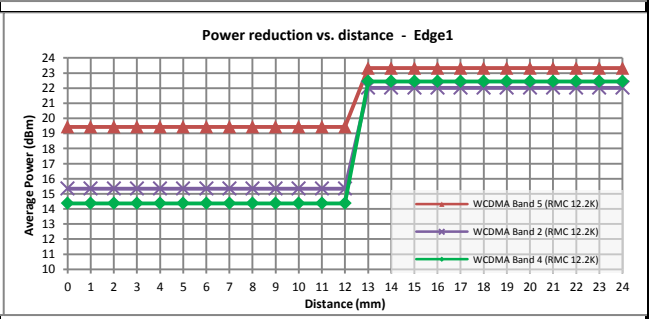

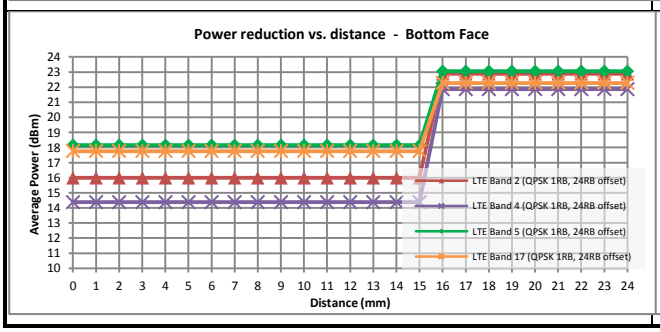

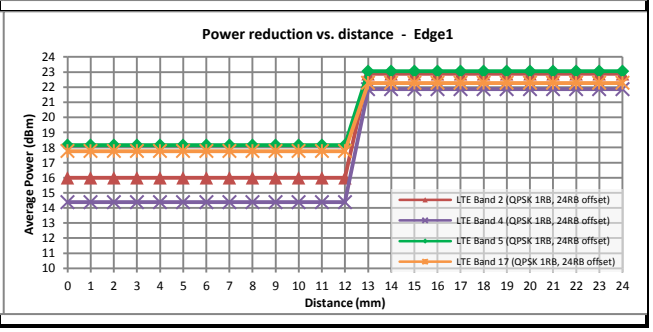

4. Specific Absorption Rate (SAR)

4.1 Introduction

SAR is related to the rate at which energy is absorbed per unit mass in an object exposed to a radio field. The SAR distribution in a biological body is complicated and is usually carried out by experimental techniques or numerical modeling. The standard recommends limits for two tiers of groups, occupational/controlled and general population/uncontrolled, based on a person's awareness and ability to exercise control over his or her exposure. In general, occupational/controlled exposure limits are higher than the limits for general population/uncontrolled.

4.2 SAR Definition

The SAR definition is the time derivative (rate) of the incremental energy (dW) absorbed by (dissipated in) an incremental mass (dm) contained in a volume element (dv) of a given density (ρ). The equation description is as below:

$$\mathbf{SAR} = \frac{\mathbf{d}}{\mathbf{dt}}\left(\frac{\mathbf{dW}}{\mathbf{dm}}\right) = \frac{\mathbf{d}}{\mathbf{dt}}\left(\frac{\mathbf{dW}}{\boldsymbol{\rho}\mathbf{dv}}\right)$$

SAR is expressed in units of Watts per kilogram (W/kg)

SAR measurement can be either related to the temperature elevation in tissue by

$$\mathbf{SAR} = \mathbf{C}\left(\frac{\boldsymbol{\delta}\mathbf{T}}{\boldsymbol{\delta}\mathbf{t}}\right)$$

Where: C is the specific heat capacity, δT is the temperature rise and δt is the exposure duration, or related to the electrical field in the tissue by

$$\mathbf{SAR} = \frac{\boldsymbol{\sigma}|\mathbf{E}|^2}{\boldsymbol{\rho}}$$

Where: σ is the conductivity of the tissue, ρ is the mass density of the tissue and E is the RMS electrical field strength.

However for evaluating SAR of low power transmitter, electrical field measurement is typically applied.

5. SAR Measurement System

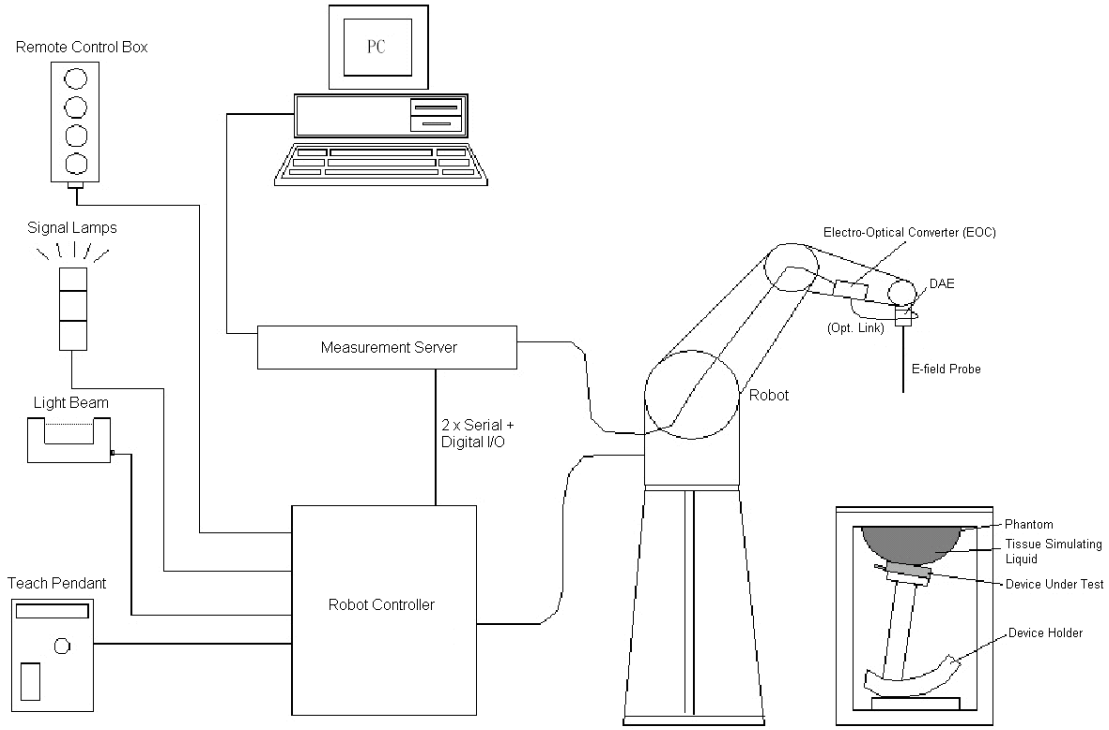

Fig 5.1 SPEAG DASY System Configurations

The DASY system for performance compliance tests is illustrated above graphically. This system consists of the following items:

- A standard high precision 6-axis robot with controller, a teach pendant and software
- A data acquisition electronic (DAE) attached to the robot arm extension
- A dosimetric probe equipped with an optical surface detector system
- The electro-optical converter (EOC) performs the conversion between optical and electrical signals
- A measurement server performs the time critical tasks such as signal filtering, control of the robot operation and fast movement interrupts.
- A probe alignment unit which improves the accuracy of the probe positioning
- A computer operating Windows XP
- DASY software
- Remove control with teach pendant and additional circuitry for robot safety such as warming lamps, etc.
- The SAM twin phantom
- A device holder
- Tissue simulating liquid
- Dipole for evaluating the proper functioning of the system

Some of the components are described in details in the following sub-sections.

5.1 E-Field Probe

The SAR measurement is conducted with the dosimetric probe (manufactured by SPEAG).The probe is specially designed and calibrated for use in liquid with high permittivity. The dosimetric probe has special calibration in liquid at different frequency. This probe has a built in optical surface detection system to prevent from collision with phantom.

5.1.1 E-Field Probe Specification

<ET3DV6 / ET3DV6R Probe >

Construction	Symmetrical design with triangular core Built-in optical fiber for surface detection system. Built-in shielding against static charges. PEEK enclosure material (resistant to organic solvents, e.g., DGBE)
Frequency	10 MHz to 3 GHz; Linearity: ± 0.2 dB
Directivity	± 0.2 dB in HSL (rotation around probe axis) ± 0.4 dB in HSL (rotation normal to probe axis)
Dynamic Range	5 µW/g to 100 mW/g; Linearity: ± 0.2 dB
Dimensions	Overall length: 330 mm (Tip: 16 mm) Tip diameter: 6.8 mm (Body: 12 mm) Distance from probe tip to dipole centers: 2.7 mm

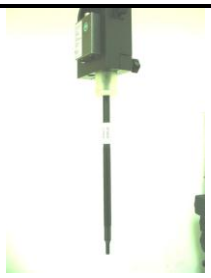

Fig 5.2 Photo of ET3DV6/ET3DV6R

<EX3DV4 / ES3DV4 Probe>

Construction	Symmetrical design with triangular core Built-in shielding against static charges PEEK enclosure material (resistant to organic solvents, e.g., DGBE)
Frequency	10 MHz to 6 GHz; Linearity: ± 0.2 dB
Directivity	± 0.3 dB in HSL (rotation around probe axis) ± 0.5 dB in tissue material (rotation normal to probe axis)
Dynamic Range	10 µW/g to 100 mW/g; Linearity: ± 0.2 dB (noise: typically < 1 µW/g)
Dimensions	Overall length: 330 mm (Tip: 20 mm) Tip diameter: 2.5 mm (Body: 12 mm) Typical distance from probe tip to dipole centers: 1 mm

Fig 5.3 Photo of EX3DV4/ES3DV4

5.1.2 E-Field Probe Calibration

Each probe needs to be calibrated according to a dosimetric assessment procedure. The calibration data can be referred to appendix C of this report.

5.2 Data Acquisition Electronics (DAE)

The data acquisition electronics (DAE) consists of a highly sensitive electrometer-grade preamplifier with auto-zeroing, a channel and gain-switching multiplexer, a fast 16 bit AD-converter and a command decoder and control logic unit. Transmission to the measurement server is accomplished through an optical downlink for data and status information as well as an optical uplink for commands and the clock.
The input impedance of the DAE is 200 MOhm; the inputs are symmetrical and floating. Common mode rejection is above 80 dB.

Fig 5.4 Photo of DAE

5.3 Robot

The SPEAG DASY system uses the high precision robots (DASY4: RX90BL; DASY5: TX90XL) type from Stäubli SA (France). For the 6-axis controller system, the robot controller version (DASY4: CS7MB; DASY5: CS8c) from Stäubli is used. The Stäubli robot series have many features that are important for our application:

- High precision (repeatability ±0.035 mm)
- High reliability (industrial design)
- Jerk-free straight movements
- Low ELF interference (the closed metallic construction shields against motor control fields)

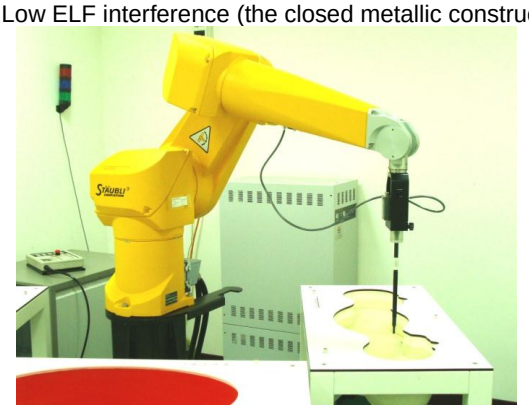

Fig 5.5 Photo of DASY4

Fig 5.6 Photo of DASY5

5.4 Measurement Server

The measurement server is based on a PC/104 CPU board with CPU (DASY4: 166 MHz, Intel Pentium; DASY5: 400 MHz, Intel Celeron), chipdisk (DASY4: 32 MB; DASY5: 128 MB), RAM (DASY4: 64 MB, DASY5: 128 MB). The necessary circuits for communication with the DAE electronic box, as well as the 16 bit AD converter system for optical detection and digital I/O interface are contained on the DASY I/O board, which is directly connected to the PC/104 bus of the CPU board.

The measurement server performs all the real-time data evaluation for field measurements and surface detection, controls robot movements and handles safety operations.

Fig 5.7 Photo of Server for DASY4

Fig 5.8 Photo of Server for DASY5

5.5 Phantom

<SAM Twin Phantom>

Shell Thickness	2 ± 0.2 mm; Center ear point: 6 ± 0.2 mm	 **Fig 5.9 Photo of SAM Phantom**
Filling Volume	Approx. 25 liters	
Dimensions	Length: 1000 mm; Width: 500 mm; Height: adjustable feet	
Measurement Areas	Left Hand, Right Hand, Flat Phantom	

The bottom plate contains three pair of bolts for locking the device holder. The device holder positions are adjusted to the standard measurement positions in the three sections. A white cover is provided to tap the phantom during off-periods to prevent water evaporation and changes in the liquid parameters. On the phantom top, three reference markers are provided to identify the phantom position with respect to the robot.

<ELI4 Phantom>

Shell Thickness	2 ± 0.2 mm (sagging: <1%)	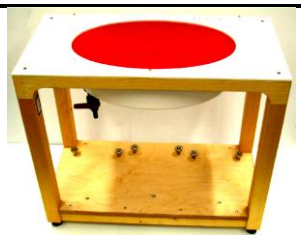 **Fig 5.10 Photo of ELI4 Phantom**
Filling Volume	Approx. 30 liters	
Dimensions	Major ellipse axis: 600 mm Minor axis: 400 mm	

The ELI4 phantom is intended for compliance testing of handheld and body-mounted wireless devices in the frequency range of 30 MHz to 6 GHz. ELI4 is fully compatible with standard and all known tissue simulating liquids.

5.6 Device Holder

<Device Holder for SAM Twin Phantom>

The SAR in the phantom is approximately inversely proportional to the square of the distance between the source and the liquid surface. For a source at 5 mm distance, a positioning uncertainty of ± 0.5 mm would produce a SAR uncertainty of ± 20 %. Accurate device positioning is therefore crucial for accurate and repeatable measurements. The positions in which the devices must be measured are defined by the standards.

The DASY device holder is designed to cope with different positions given in the standard. It has two scales for the device rotation (with respect to the body axis) and the device inclination (with respect to the line between the ear reference points). The rotation center for both scales is the ear reference point (ERP). Thus the device needs no repositioning when changing the angles.

The DASY device holder is constructed of low-loss POM material having the following dielectric parameters: relative permittivity ε = 3 and loss tangent δ = 0.02. The amount of dielectric material has been reduced in the closest vicinity of the device, since measurements have suggested that the influence of the clamp on the test results could thus be lowered.

Fig 5.11 Device Holder

<Laptop Extension Kit>

The extension is lightweight and made of POM, acrylic glass and foam. It fits easily on the upper part of the mounting device in place of the phone positioned. The extension is fully compatible with the SAM Twin and ELI phantoms.

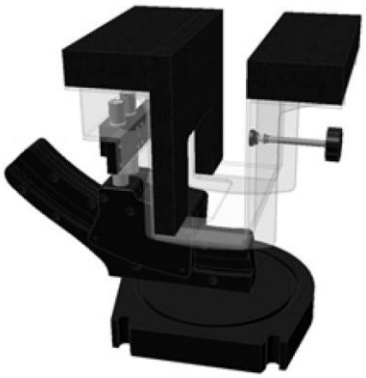

Fig 5.12 Laptop Extension Kit

5.7 Data Storage and Evaluation

5.7.1 Data Storage

The DASY software stores the assessed data from the data acquisition electronics as raw data (in microvolt readings from the probe sensors), together with all the necessary software parameters for the data evaluation (probe calibration data, liquid parameters and device frequency and modulation data) in measurement files. The post-processing software evaluates the desired unit and format for output each time the data is visualized or exported. This allows verification of the complete software setup even after the measurement and allows correction of erroneous parameter settings. For example, if a measurement has been performed with an incorrect crest factor parameter in the device setup, the parameter can be corrected afterwards and the data can be reevaluated.

The measured data can be visualized or exported in different units or formats, depending on the selected probe type (e.g., [V/m], [A/m], [mW/g]). Some of these units are not available in certain situations or give meaningless results, e.g., a SAR-output in a non-lose media, will always be zero. Raw data can also be exported to perform the evaluation with other software packages.

5.7.2 Data Evaluation

The DASY post-processing software (SEMCAD) automatically executes the following procedures to calculate the field units from the microvolt readings at the probe connector. The parameters used in the evaluation are stored in the configuration modules of the software：

Probe parameters：	- Sensitivity	$Norm_i$, a_{i0}, a_{i1}, a_{i2}
	- Conversion factor	$ConvF_i$
	- Diode compression point	dcp_i
Device parameters：	- Frequency	f
	- Crest factor	cf
Media parameters：	- Conductivity	σ
	- Density	ρ

These parameters must be set correctly in the software. They can be found in the component documents or they can be imported into the software from the configuration files issued for the DASY components. In the direct measuring mode of the multi-meter option, the parameters of the actual system setup are used. In the scan visualization and export modes, the parameters stored in the corresponding document files are used.

The first step of the evaluation is a linearization of the filtered input signal to account for the compression characteristics of the detector diode. The compensation depends on the input signal, the diode type and the DC-transmission factor from the diode to the evaluation electronics. If the exciting field is pulsed, the crest factor of the signal must be known to correctly compensate for peak power.

The formula for each channel can be given as：

$$\mathbf{V_i = U_i + U_i^2 \cdot \frac{cf}{dcp_i}}$$

with V_i = compensated signal of channel i, (i = x, y, z)
U_i = input signal of channel i, (i = x, y, z)
cf = crest factor of exciting field (DASY parameter)
dcp_i = diode compression point (DASY parameter)

From the compensated input signals, the primary field data for each channel can be evaluated：

E-field Probes：$\mathbf{E_i = \sqrt{\frac{V_i}{Norm_i \cdot ConvF}}}$

H-field Probes：$\mathbf{H_i = \sqrt{V_i} \cdot \frac{a_{i0}+a_{i1}f+a_{i2}f^2}{f}}$

with V_i = compensated signal of channel i, (i = x, y, z)
$Norm_i$ = sensor sensitivity of channel i, (i = x, y, z), μV/(V/m)^2 for E-field Probes
ConvF = sensitivity enhancement in solution
a_{ij} = sensor sensitivity factors for H-field probes
f = carrier frequency [GHz]
E_i = electric field strength of channel i in V/m
H_i = magnetic field strength of channel i in A/m

The RSS value of the field components gives the total field strength (Hermitian magnitude)：

$$\mathbf{E_{tot} = \sqrt{E_x^2 + E_y^2 + E_z^2}}$$

The primary field data are used to calculate the derived field units.

$$\mathbf{SAR = E_{tot}^2 \cdot \frac{\sigma}{\rho \cdot 1000}}$$

with SAR = local specific absorption rate in mW/g
E_{tot} = total field strength in V/m
σ = conductivity in [mho/m] or [Siemens/m]
ρ = equivalent tissue density in g/cm^3

Note that the density is set to 1, to account for actual head tissue density rather than the density of the tissue simulating liquid.

5.8 Test Equipment List

Manufacturer	Name of Equipment	Type/Model	Serial Number	Calibration	
				Last Cal.	Due Date
SPEAG	750MHz System Validation Kit	D750V3	1012	Jun. 11, 2010	Jun. 10, 2013
SPEAG	835MHz System Validation Kit	D835V2	499	Mar. 22, 2010	Mar. 21, 2013
SPEAG	1750MHz System Validation Kit	D1750V2	1068	Jun. 20, 2012	Jun. 19, 2013
SPEAG	1900MHz System Validation Kit	D1900V2	5d041	Mar. 23, 2010	Mar. 22, 2013
SPEAG	Data Acquisition Electronics	DAE3	577	Jun. 06, 2012	Jun. 05, 2013
SPEAG	Data Acquisition Electronics	DAE4	778	Aug. 27, 2012	Aug. 26, 2013
SPEAG	Data Acquisition Electronics	DAE3	495	Apr. 23, 2012	Apr. 22, 2013
SPEAG	Dosimetric E-Field Probe	ET3DV6	1787	May 29, 2012	May 28, 2013
SPEAG	Dosimetric E-Field Probe	EX3DV4	3801	Jun. 22, 2012	Jun. 21, 2013
SPEAG	Dosimetric E-Field Probe	ES3DV3	3306	Sep. 24, 2012	Sep. 23, 2013
SPEAG	Dosimetric E-Field Probe	ES3DV3	3270	Sep. 28, 2012	Sep. 27, 2013
Wisewind	Thermometer	ETP-101	TM560	Nov. 13, 2012	Nov. 12, 2013
Wisewind	Thermometer	HTC-1	TM685	Nov. 13, 2012	Nov. 12, 2013
Wisewind	Thermometer	HTC-1	TM659	Nov. 13, 2012	Nov. 12, 2013
H.M.IRIS	Thermometer	TH-08	TM658	Nov. 13, 2012	Nov. 12, 2013
SPEAG	Device Holder	N/A	N/A	NCR	NCR
SPEAG	ELI4 Phantom	QD 0VA 001 BB	1026	NCR	NCR
SPEAG	ELI4 Phantom	QD 0VA 002 AA	TP-1131	NCR	NCR
Agilent	Network Analyzer	E5071C	MY46101588	May 11, 2012	May 10, 2013
Anritsu	Radio Communication Analyzer	MT8820C	6201074414	Dec. 21, 2011	Dec. 20, 2012
Agilent	ESG Vector Series Signal Generator	E4438C	MY49070755	Oct. 02, 2012	Oct. 01, 2013
Anritsu	Power Meter	ML2495A	1132003	Aug. 14, 2012	Aug. 13, 2013
Agilent	Wireless Communication Test Set	E5515C	MY48360820	Jan. 05, 2012	Jan. 04, 2014
R&S	Universal Digital Radiocommunication Tester	CMU200	114256	Jun. 29, 2012	Jun. 28, 2013
Agilent	Dual Directional Coupler	778D	50422	NCR	NCR
Woken	Attenuator	WK0602-XX	N/A	NCR	NCR
AR	Power Amplifier	5S1G4M2	0328767	NCR	NCR

Table 5.1 Test Equipment List

Note:
1. The calibration certificate of DASY can be referred to appendix C of this report.
2. Referring to KDB 865664 D01v01, the dipole calibration interval can be extended to 3 years with justification. The dipoles are also not physically damaged, or repaired during the interval.
3. The justification data of dipole D750V3, SN: 1012, D835V2, SN: 499, and D1900V2, SN: 5d041 can be found in appendix C. The return loss is < -20dB, within 20% of prior calibration, the impedance is within 5 ohm of prior calibration.

6. Tissue Simulating Liquids

For the measurement of the field distribution inside the SAM phantom with DASY, the phantom must be filled with around 25 liters of homogeneous body tissue simulating liquid. For head SAR testing, the liquid height from the ear reference point (ERP) of the phantom to the liquid top surface is larger than 15 cm, which is shown in Fig. 6.1. For body SAR testing, the liquid height from the center of the flat phantom to the liquid top surface is larger than 15 cm, which is shown in Fig. 6.2.

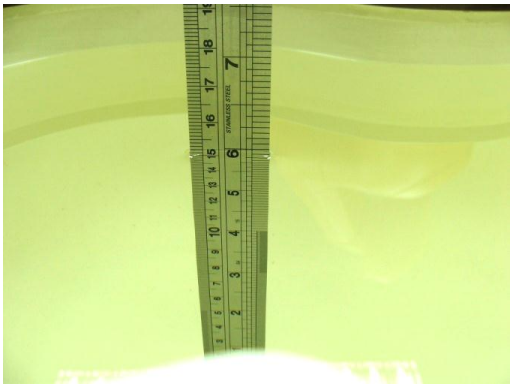

Fig 6.1 Photo of Liquid Height for Head SAR

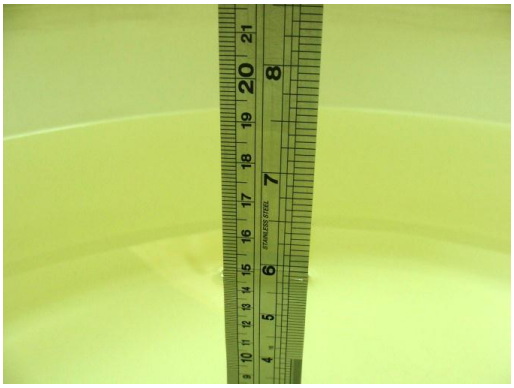

Fig 6.2 Photo of Liquid Height for Body SAR

The following table gives the recipes for tissue simulating liquid.

Frequency (MHz)	Water (%)	Sugar (%)	Cellulose (%)	Salt (%)	Preventol (%)	DGBE (%)	Conductivity (σ)	Permittivity (ε_r)
For Head								
750	41.1	57.0	0.2	1.4	0.2	0	0.89	41.9
835	40.3	57.9	0.2	1.4	0.2	0	0.90	41.5
1800, 1900, 2000	55.2	0	0	0.3	0	44.5	1.40	40.0
2450	55.0	0	0	0	0	45.0	1.80	39.2
For Body								
750	51.7	47.2	0	0.9	0.1	0	0.96	55.5
835	50.8	48.2	0	0.9	0.1	0	0.97	55.2
1800, 1900, 2000	70.2	0	0	0.4	0	29.4	1.52	53.3
2450	68.6	0	0	0	0	31.4	1.95	52.7

Table 6.1 Recipes of Tissue Simulating Liquid

The dielectric parameters of the liquids were verified prior to the SAR evaluation using an Agilent 85070D Dielectric Probe Kit and an Agilent Network Analyzer.

The following table shows the measuring results for simulating liquid.

Freq. (MHz)	Liquid Type	Temp. (℃)	Conductivity (σ)	Permittivity (ε_r)	Conductivity Target (σ)	Permittivity Target (ε_r)	Delta (σ) (%)	Delta (ε_r) (%)	Limit (%)	Date
750	Body	21.6	0.962	53.914	0.96	55.5	0.21	-2.86	±5	Nov. 24, 2012
835	Body	21.8	0.968	54.6	0.97	55.2	-0.21	-1.09	±5	Nov. 21, 2012
1750	Body	21.6	1.515	52.41	1.52	53.3	-0.33	-1.67	±5	Nov. 20, 2012
1750	Body	21.6	1.508	52.41	1.52	53.3	-0.79	-1.67	±5	Nov. 24, 2012
1900	Body	21.2	1.54	54.458	1.52	53.3	1.32	2.17	±5	Nov. 23, 2012
2450	Body	21.5	2.018	52.307	1.95	52.7	3.49	-0.75	±5	Nov. 24, 2012

Table 6.2 Measuring Results for Simulating Liquid

7. SAR System Verification

Each DASY system is equipped with one or more system validation kits. These units, together with the predefined measurement procedures within the DASY software, enable the user to conduct the system performance check and system validation. System validation kit includes a dipole, tripod holder to fix it underneath the flat phantom and a corresponding distance holder.

7.1 Purpose of System Performance check

The system performance check verifies that the system operates within its specifications. System and operator errors can be detected and corrected. It is recommended that the system performance check be performed prior to any usage of the system in order to guarantee reproducible results. The system performance check uses normal SAR measurements in a simplified setup with a well characterized source. This setup was selected to give a high sensitivity to all parameters that might fail or vary over time. The system check does not intend to replace the calibration of the components, but indicates situations where the system uncertainty is exceeded due to drift or failure.

7.2 System Setup

In the simplified setup for system evaluation, the EUT is replaced by a calibrated dipole and the power source is replaced by a continuous wave that comes from a signal generator. The calibrated dipole must be placed beneath the flat phantom section of the SAM twin phantom with the correct distance holder. The distance holder should touch the phantom surface with a light pressure at the reference marking and be oriented parallel to the long side of the phantom. The equipment setup is shown below:

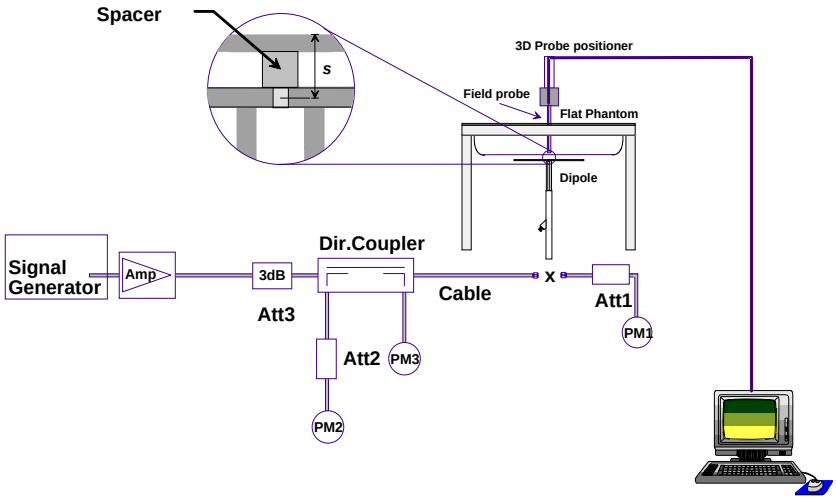

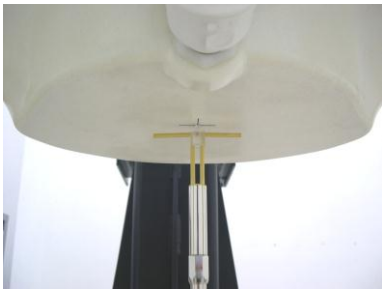

Fig 7.1 System Setup for System Evaluation **Fig 7.2 Photo of Dipole Setup**

1. Signal Generator
2. Amplifier
3. Directional Coupler
4. Power Meter
5. Calibrated Dipole

7.3 SAR System Verification Results

Comparing to the original SAR value provided by SPEAG, the validation data should be within its specification of 10 %. Table 7.1 shows the target SAR and measured SAR after normalized to 1W input power. The table below indicates the system performance check can meet the variation criterion and the plots can be referred to Appendix A of this report.

Measurement Date	Frequency (MHz)	Liquid Type	Input power fed to dipole (mW)	Targeted SAR_{1g} (W/kg)	Measured SAR_{1g} (W/kg)	Normalized SAR_{1g} (W/kg)	Deviation (%)
Nov. 24, 2012	750	Body	250	8.86	2.33	9.32	5.19
Nov. 21, 2012	835	Body	250	9.82	2.55	10.20	3.87
Nov. 20, 2012	1750	Body	250	36.8	9.41	37.64	2.28
Nov. 24, 2012	1750	Body	250	36.8	8.92	35.68	-3.04
Nov. 23, 2012	1900	Body	250	40	9.39	37.56	-6.10
Nov. 24, 2012	2450	Body	250	52.3	13.2	52.80	0.96

Table 7.1 Target and Measurement SAR after Normalized

8. EUT Testing Position

This EUT was tested in three different positions. They are bottom of tablet PC, Edge1, and Edge2. In these positions, the surface of EUT is touching with phantom 0 cm, 1.1 cm, and 1.4 cm gap. Please refer to Appendix E for the test setup photos.

9. Measurement Procedures

The measurement procedures are as follows:

<Conducted power measurement>

(a) For WWAN power measurement, use base station simulator to configure EUT WWAN transmission in conducted connection with RF cable, at maximum power in each supported wireless interface and frequency band.
(b) Read the WWAN RF power level from the base station simulator.
(c) For WLAN/BT power measurement, use engineering software to configure EUT WLAN/BT continuously transmission, at maximum RF power in each supported wireless interface and frequency band
(d) Connect EUT RF port through RF cable to the power meter, and measure WLAN/BT output power

<SAR measurement>

(a) Use base station simulator to configure EUT WWAN transmission in radiated connection, and engineering software to configure EUT WLAN/BT continuously transmission, at maximum RF power, in the highest power channel.
(b) Place the EUT in the positions as Appendix E demonstrates.
(c) Set scan area, grid size and other setting on the DASY software.
(d) Measure SAR results for the highest power channel on each testing position.
(e) Find out the largest SAR result on these testing positions of each band
(f) Measure SAR results for other channels in worst SAR testing position if the SAR of highest power channel is larger than 0.8 W/kg

According to the test standard, the recommended procedure for assessing the peak spatial-average SAR value consists of the following steps:

(a) Power reference measurement
(b) Area scan
(c) Zoom scan
(d) Power drift measurement

9.1 Spatial Peak SAR Evaluation

The procedure for spatial peak SAR evaluation has been implemented according to the test standard. It can be conducted for 1g and 10g, as well as for user-specific masses. The DASY software includes all numerical procedures necessary to evaluate the spatial peak SAR value.

The base for the evaluation is a "cube" measurement. The measured volume must include the 1g and 10g cubes with the highest averaged SAR values. For that purpose, the center of the measured volume is aligned to the interpolated peak SAR value of a previously performed area scan.

The entire evaluation of the spatial peak values is performed within the post-processing engine (SEMCAD). The system always gives the maximum values for the 1g and 10g cubes. The algorithm to find the cube with highest averaged SAR is divided into the following stages:

(a) Extraction of the measured data (grid and values) from the Zoom Scan
(b) Calculation of the SAR value at every measurement point based on all stored data (A/D values and measurement parameters)
(c) Generation of a high-resolution mesh within the measured volume
(d) Interpolation of all measured values form the measurement grid to the high-resolution grid
(e) Extrapolation of the entire 3-D field distribution to the phantom surface over the distance from sensor to surface
(f) Calculation of the averaged SAR within masses of 1g and 10g

9.2 Area & Zoom Scan Procedures

First Area Scan is used to locate the approximate location(s) of the local peak SAR value(s). The measurement grid within an Area Scan is defined by the grid extent, grid step size and grid offset. Next, in order to determine the EM field distribution in a three-dimensional spatial extension, Zoom Scan is required. The Zoom Scan is performed around the highest E-field value to determine the averaged SAR-distribution over 10 g.
Area scan and zoom scan resolution setting follows KDB 865664 D01v01 quoted below.

			≤ 3 GHz	> 3 GHz
Maximum distance from closest measurement point (geometric center of probe sensors) to phantom surface			5 ± 1 mm	½·δ·ln(2) ± 0.5 mm
Maximum probe angle from probe axis to phantom surface normal at the measurement location			30° ± 1°	20° ± 1°
Maximum area scan spatial resolution: Δx_{Area}, Δy_{Area}			≤ 2 GHz: ≤ 15 mm 2 – 3 GHz: ≤ 12 mm	3 – 4 GHz: ≤ 12 mm 4 – 6 GHz: ≤ 10 mm
			When the x or y dimension of the test device, in the measurement plane orientation, is smaller than the above, the measurement resolution must be ≤ the corresponding x or y dimension of the test device with at least one measurement point on the test device.	
Maximum zoom scan spatial resolution: Δx_{Zoom}, Δy_{Zoom}			≤ 2 GHz: ≤ 8 mm 2 – 3 GHz: ≤ 5 mm*	3 – 4 GHz: ≤ 5 mm* 4 – 6 GHz: ≤ 4 mm*
Maximum zoom scan spatial resolution, normal to phantom surface	uniform grid: $\Delta z_{Zoom}(n)$		≤ 5 mm	3 – 4 GHz: ≤ 4 mm 4 – 5 GHz: ≤ 3 mm 5 – 6 GHz: ≤ 2 mm
	graded grid	$\Delta z_{Zoom}(1)$: between 1st two points closest to phantom surface	≤ 4 mm	3 – 4 GHz: ≤ 3 mm 4 – 5 GHz: ≤ 2.5 mm 5 – 6 GHz: ≤ 2 mm
		$\Delta z_{Zoom}(n>1)$: between subsequent points	$\leq 1.5 \cdot \Delta z_{Zoom}(n-1)$	
Minimum zoom scan volume	x, y, z		≥ 30 mm	3 – 4 GHz: ≥ 28 mm 4 – 5 GHz: ≥ 25 mm 5 – 6 GHz: ≥ 22 mm

Note: δ is the penetration depth of a plane-wave at normal incidence to the tissue medium; see draft standard IEEE P1528-2011 for details.

* When zoom scan is required and the *reported* SAR from the area scan based *1-g SAR estimation* procedures of KDB 447498 is ≤ 1.4 W/kg, ≤ 8 mm, ≤ 7 mm and ≤ 5 mm zoom scan resolution may be applied, respectively, for 2 GHz to 3 GHz, 3 GHz to 4 GHz and 4 GHz to 6 GHz.

9.3 Volume Scan Procedures

The volume scan is used for assess overlapping SAR distributions for antennas transmitting in different frequency bands. It is equivalent to an oversized zoom scan used in standalone measurements. The measurement volume will be used to enclose all the simultaneous transmitting antennas. For antennas transmitting simultaneously in different frequency bands, the volume scan is measured separately in each frequency band. In order to sum correctly to compute the 1g aggregate SAR, the EUT remain in the same test position for all measurements and all volume scan use the same spatial resolution and grid spacing. When all volume scan were completed, the software, SEMCAD postprocessor can combine and subsequently superpose these measurement data to calculating the multiband SAR.

9.4 SAR Averaged Methods

In DASY, the interpolation and extrapolation are both based on the modified Quadratic Shepard's method. The interpolation scheme combines a least-square fitted function method and a weighted average method which are the two basic types of computational interpolation and approximation.

Extrapolation routines are used to obtain SAR values between the lowest measurement points and the inner phantom surface. The extrapolation distance is determined by the surface detection distance and the probe sensor offset. The uncertainty increases with the extrapolation distance. To keep the uncertainty within 1% for the 1 g and 10 g cubes, the extrapolation distance should not be larger than 5 mm.

9.5 Power Drift Monitoring

All SAR testing is under the EUT install full charged battery and transmit maximum output power. In DASY measurement software, the power reference measurement and power drift measurement procedures are used for monitoring the power drift of EUT during SAR test. Both these procedures measure the field at a specified reference position before and after the SAR testing. The software will calculate the field difference in dB. If the power drifts more than 5%, the SAR will be retested.

10. SAR Testing Positions

10.1 Exposure Positions Consideration

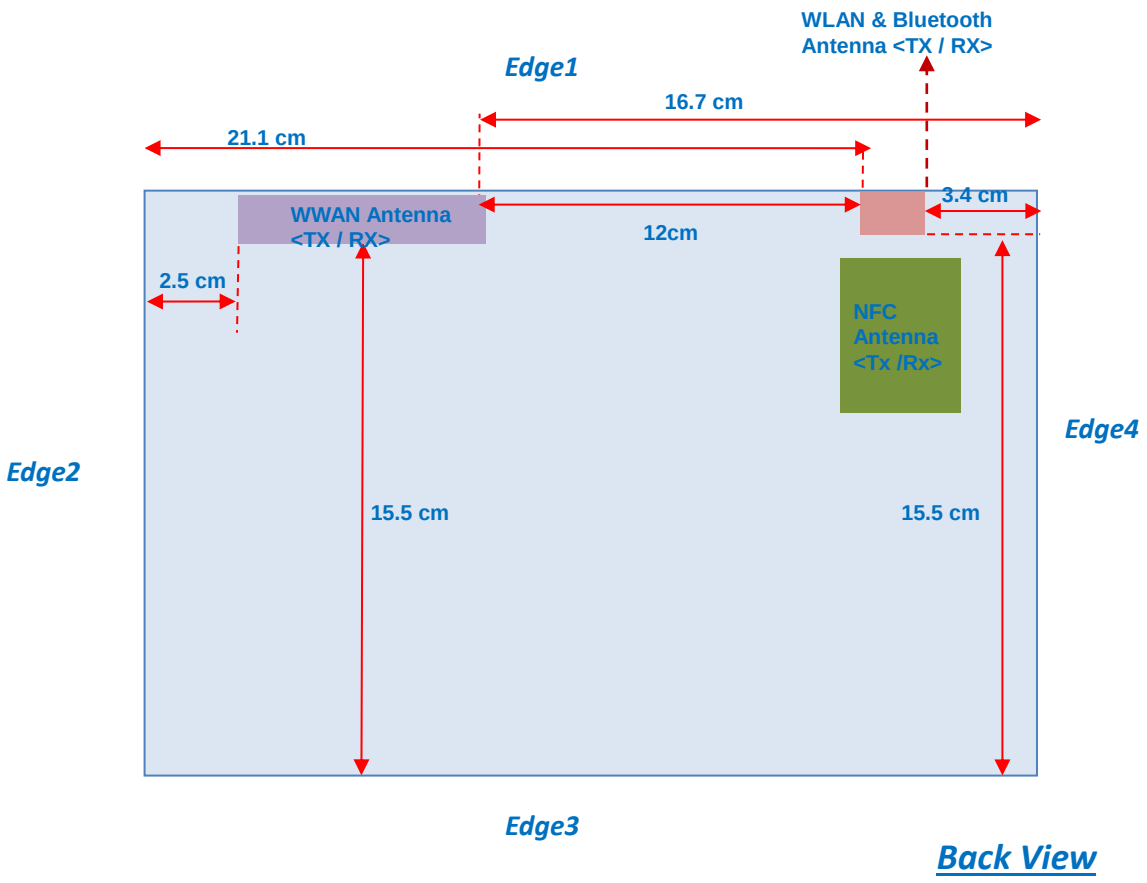

Antennas	Wireless Interface
WWAN Antenna (Tx/Rx)	GSM850 GSM1900 WCDMA Band II WCDMA Band V WCDMA Band IV LTE Band 2 LTE Band 4 LTE Band 5 LTE Band 17
WLAN Antenna (Tx/Rx)	WLAN 2.4G
NFC Antenna (Tx/Rx)	NFC

		WWAN Antenna									WLAN/BT Antenna	
	Wireless Interface	GPRS850 Class 10	GPRS1900 Class 10	WCDMA band 5	WCDMA band 4	WCDMA band 2	LTE band 2	LTE band 4	LTE band 5	LTE band 17	802.11b	Bluetooth
Tune-up Maximum power (dBm)		25	23	24	23	23	23	23	23.5	23.5	13	7.5
Tune-up Maximum rated power (mW)		316.23	199.53	251.19	199.53	199.53	199.53	199.53	223.87	223.87	19.95	5.62
Bottom Face	Antenna to user (mm)	5									5	
	SAR exclusion threshold (mW)	16	11	16	11	11	11	11	16	18	10	10
	SAR testing required?	YES	YES	YES	YES	YES	YES	YES	YES	YES	YES	NO
Edge 1	Antenna to user (mm)	5									5	
	SAR exclusion threshold (mW)	16	11	16	11	11	11	11	16	18	10	10
	SAR testing required?	YES	YES	YES	YES	YES	YES	YES	YES	YES	YES	NO
Edge 2	Antenna to user (mm)	25									211	
	SAR exclusion threshold (mW)	82	54	82	57	54	54	57	82	90	404	402
	SAR testing required?	YES	YES	YES	YES	YES	YES	YES	YES	YES	NO	NO
Edge 3	Antenna to user (mm)	155									155	
	SAR exclusion threshold (mW)	749	1159	749	1163	1159	1159	1163	749	669	296	295
	SAR testing required?	NO	NO	NO	NO	NO	NO	NO	NO	NO	NO	NO
Edge 4	Antenna to user (mm)	167									34	
	SAR exclusion threshold (mW)	815	1279	815	1283	1279	1279	1283	815	725	65	65
	SAR testing required?	NO	NO	NO	NO	NO	NO	NO	NO	NO	NO	NO

Note:

1. Maximum power is the source-based time-average power and represents the maximum RF output power among production units
2. If the distance of the antenna to the user is < 5mm, 5mm is used to determine SAR exclusion threshold
3. Per KDB 447498 D01v05, standalone SAR test exclusion threshold is applied; If the distance of the antenna to the user is < 5mm, 5mm is used to determine SAR exclusion threshold
4. For the exposure positions that proximity sensor power reduction is applied for SAR compliance, additional SAR testing at “sensor trigger distance – 1mm” with EUT transmitting full power in normal mode was performed.

10.2 Conducted RF Output Power (Unit: dBm)

<GSM Conducted Power>

GSM850 Burst Average Power (dBm)									
Channel	**128**	**189**	**251**	**128**	**189**	**251**	**128**	**189**	**251**
Frequency (MHz)	**824.2**	**836.4**	**848.8**	**824.2**	**836.4**	**848.8**	**824.2**	**836.4**	**848.8**
Mode	**Without Power Back-off**			**With Power Back-off**			**Pwr. Reduction (dB)**		
GPRS (GMSK, 1 Tx slot) – CS1	32.80	32.85	32.88	29.43	29.55	29.64	3.37	3.30	3.24
GPRS (GMSK, 2 Tx slots) – CS1	30.24	30.44	30.51	27.46	27.67	27.69	2.78	2.77	2.82
EDGE (GMSK, 1 Tx slot) – MCS1	32.68	32.73	32.80	29.42	29.54	29.61	3.26	3.19	3.19
EDGE (GMSK, 2 Tx slots) – MCS1	30.18	30.37	30.47	27.42	27.66	27.68	2.76	2.71	2.79
EDGE (8PSK, 1 Tx slot) – MCS5	26.22	26.24	26.23	23.25	23.26	23.27	2.97	2.98	2.96
EDGE (8PSK, 2 Tx slots) – MCS5	26.14	26.16	26.15	23.21	23.22	23.23	2.93	2.94	2.92
GSM850 Frame-Average Power (dBm)									
Channel	**128**	**189**	**251**	**128**	**189**	**251**	**128**	**189**	**251**
Frequency (MHz)	**824.2**	**836.4**	**848.8**	**824.2**	**836.4**	**848.8**	**824.2**	**836.4**	**848.8**
Mode	**Without Power Back-off**			**With Power Back-off**			**Pwr. Reduction (dB)**		
GPRS (GMSK, 1 Tx slot) – CS1	23.80	23.85	23.88	20.43	20.55	20.64	3.37	3.30	3.24
GPRS (GMSK, 2 Tx slots) – CS1	24.24	24.44	**24.51**	21.46	21.67	**21.69**	2.78	2.77	2.82
EDGE (GMSK, 1 Tx slot) – MCS1	23.68	23.73	23.80	20.42	20.54	20.61	3.26	3.19	3.19
EDGE (GMSK, 2 Tx slots) – MCS1	24.18	24.37	24.47	21.42	21.66	21.68	2.76	2.71	2.79
EDGE (8PSK, 1 Tx slot) – MCS5	17.22	17.24	17.23	14.25	14.26	14.27	2.97	2.98	2.96
EDGE (8PSK, 2 Tx slots) – MCS5	20.14	20.16	20.15	17.21	17.22	17.23	2.93	2.94	2.92

Remark: The frame-averaged power is linearly scaled the maximum burst averaged power over 8 time slots.
The calculated method is shown as below:
Frame-averaged power = Maximum burst averaged power (1 Tx Slot) - 9 dB
Frame-averaged power = Maximum burst averaged power (2 Tx Slots) - 6 dB

Note:

1. Following KDB 941225 D03, for Body SAR testing, the EUT operating without power back-off was set in GPRS (2 Tx slots) and the EUT operating with power back-off was set in GPRS (2 Tx slots) due to its highest frame-average power.
2. Per KDB 447498 D01v05, the maximum output power channel is used for SAR testing and for further SAR test reduction.

GSM1900 Burst Average Power (dBm)									
Channel	**512**	**661**	**810**	**512**	**661**	**810**	**512**	**661**	**810**
Frequency (MHz)	**1850.2**	**1880**	**1909.8**	**1850.2**	**1880**	**1909.8**	**1850.2**	**1880**	**1909.8**
Mode	**Without Power Back-off**			**With Power Back-off**			**Pwr. Reduction (dB)**		
GPRS (GMSK, 1 Tx slot) – CS1	29.00	29.03	28.84	23.25	23.37	23.29	5.75	5.66	5.55
GPRS (GMSK, 2 Tx slots) – CS1	27.02	27.33	27.25	20.81	20.96	20.94	6.21	6.37	6.31
EDGE (GMSK, 1 Tx slot) – MCS1	29.00	29.02	28.81	23.23	23.36	23.27	5.77	5.66	5.54
EDGE (GMSK, 2 Tx slots) – MCS1	27.01	27.29	27.21	20.78	20.93	20.92	6.23	6.36	6.29
EDGE (8PSK, 1 Tx slot) – MCS5	24.65	24.82	24.79	19.38	19.63	19.49	5.27	5.19	5.30
EDGE (8PSK, 2 Tx slots) – MCS5	24.51	24.72	24.66	19.30	19.55	19.40	5.21	5.17	5.26
GSM1900 Frame-Averaged Power (dBm)									
Channel	**512**	**661**	**810**	**512**	**661**	**810**	**512**	**661**	**810**
Frequency (MHz)	**1850.2**	**1880**	**1909.8**	**1850.2**	**1880**	**1909.8**	**1850.2**	**1880**	**1909.8**
Mode	**Without Power Back-off**			**With Power Back-off**			**Pwr. Reduction (dB)**		
GPRS (GMSK, 1 Tx slot) – CS1	20.00	20.03	19.84	14.25	14.37	14.29	5.75	5.66	5.55
GPRS (GMSK, 2 Tx slots) – CS1	21.02	**21.33**	21.25	14.81	**14.96**	14.94	6.21	6.37	6.31
EDGE (GMSK, 1 Tx slot) – MCS1	20.00	20.02	19.81	14.23	14.36	14.27	5.77	5.66	5.54
EDGE (GMSK, 2 Tx slots) – MCS1	21.01	21.29	21.21	14.78	14.93	14.92	6.23	6.36	6.29
EDGE (8PSK, 1 Tx slot) – MCS5	15.65	15.82	15.79	10.38	10.63	10.49	5.27	5.19	5.30
EDGE (8PSK, 2 Tx slots) – MCS5	18.51	18.72	18.66	13.30	13.55	13.40	5.21	5.17	5.26

Remark: The frame-averaged power is linearly scaled the maximum burst averaged power over 8 time slots.
The calculated method is shown as below:
Frame-averaged power = Maximum burst averaged power (1 Tx Slot) - 9 dB
Frame-averaged power = Maximum burst averaged power (2 Tx Slots) - 6 dB

Note:

1. Following KDB 941225 D03, for Body SAR testing, the EUT operating without power back-off was set in GPRS (2 Tx slots) and the EUT operating with power back-off was set in GPRS (2 Tx slots) due to its highest frame-average power.
2. Per KDB 447498 D01v05, the maximum output power channel is used for SAR testing and for further SAR test reduction.

<WCDMA Conducted Power>

The following tests were conducted according to the test requirements outlines in 3GPP TS 34.121 specification. A summary of these settings are illustrated below:

HSDPA Setup Configuration:

a. The EUT was connected to Base Station referred to the drawing of Setup Configuration.
b. The RF path losses were compensated into the measurements.
c. A call was established between EUT and Base Station with following setting:
   i. Set Gain Factors (β_c and β_d) and parameters were set according to each
   ii. Specific sub-test in the following table, C10.1.4, quoted from the TS 34.121
   iii. Set RMC 12.2Kbps + HSDPA mode.
   iv. Set Cell Power = -86 dBm
   v. Set HS-DSCH Configuration Type to FRC (H-set 1, QPSK)
   vi. Select HSDPA Uplink Parameters
   vii. Set Delta ACK, Delta NACK and Delta CQI = 8
   viii. Set Ack-Nack Repetition Factor to 3
   ix. Set CQI Feedback Cycle (k) to 4 ms
   x. Set CQI Repetition Factor to 2
   xi. Power Ctrl Mode = All Up bits
d. The transmitted maximum output power was recorded.

Table C.10.1.4: β values for transmitter characteristics tests with HS-DPCCH

Sub-test	β_c	β_d	β_d *(SF)*	β_c/β_d	β_{HS} *(Note1, Note 2)*	CM (dB) *(Note 3)*	MPR (dB) *(Note 3)*
1	2/15	15/15	64	2/15	4/15	0.0	0.0
2	12/15 *(Note 4)*	15/15 *(Note 4)*	64	12/15 *(Note 4)*	24/15	1.0	0.0
3	15/15	8/15	64	15/8	30/15	1.5	0.5
4	15/15	4/15	64	15/4	30/15	1.5	0.5

Note 1: Δ_{ACK}, Δ_{NACK} and Δ_{CQI} = 30/15 with β_{hs} = 30/15 * β_c .

Note 2: For the HS-DPCCH power mask requirement test in clause 5.2C, 5.7A, and the Error Vector Magnitude (EVM) with HS-DPCCH test in clause 5.13.1A, and HSDPA EVM with phase discontinuity in clause 5.13.1AA, Δ_{ACK} and Δ_{NACK} = 30/15 with β_{hs} = 30/15 * β_c , and Δ_{CQI} = 24/15 with β_{hs} = 24/15 * β_c .

Note 3: CM = 1 for β_c/β_d =12/15, β_{hs}/β_c=24/15. For all other combinations of DPDCH, DPCCH and HS-DPCCH the MPR is based on the relative CM difference. This is applicable for only UEs that support HSDPA in release 6 and later releases.

Note 4: For subtest 2 the β_c/β_d ratio of 12/15 for the TFC during the measurement period (TF1, TF0) is achieved by setting the signalled gain factors for the reference TFC (TF1, TF1) to β_c = 11/15 and β_d = 15/15.

Setup Configuration

HSUPA Setup Configuration:

a. The EUT was connected to Base Station referred to the drawing of Setup Configuration.
b. The RF path losses were compensated into the measurements.
c. A call was established between EUT and Base Station with following setting * :
   i. Call Configs = 5.2B, 5.9B, 5.10B, and 5.13.2B with QPSK
   ii. Set the Gain Factors (β_c and β_d) and parameters (AG Index) were set according to each specific sub-test in the following table, C11.1.3, quoted from the TS 34.121
   iii. Set Cell Power = -86 dBm
   iv. Set Channel Type = 12.2k + HSPA
   v. Set UE Target Power
   vi. Power Ctrl Mode= Alternating bits
   vii. Set and observe the E-TFCI
   viii. Confirm that E-TFCI is equal to the target E-TFCI of 75 for sub-test 1, and other subtest's E-TFCI
d. The transmitted maximum output power was recorded.

Table C.11.1.3: β values for transmitter characteristics tests with HS-DPCCH and E-DCH

Sub-test	β_c	β_d	β_d (SF)	β_c/β_d	β_{HS} (Note1)	β_{ec}	β_{ed} (Note 5) (Note 6)	β_{ed} (SF)	β_{ed} (Codes)	CM (dB) (Note 2)	MPR (dB) (Note 2)	AG Index (Note 6)	E-TFCI
1	11/15 (Note 3)	15/15 (Note 3)	64	11/15 (Note 3)	22/15	209/225	1309/225	4	1	1.0	0.0	20	75
2	6/15	15/15	64	6/15	12/15	12/15	94/75	4	1	3.0	2.0	12	67
3	15/15	9/15	64	15/9	30/15	30/15	$\beta_{ed}1$: 47/15 $\beta_{ed}2$: 47/15	4 4	2	2.0	1.0	15	92
4	2/15	15/15	64	2/15	4/15	2/15	56/75	4	1	3.0	2.0	17	71
5	15/15 (Note 4)	15/15 (Note 4)	64	15/15 (Note 4)	30/15	24/15	134/15	4	1	1.0	0.0	21	81

Note 1: Δ_{ACK}, Δ_{NACK} and Δ_{CQI} = 30/15 with β_{hs} = 30/15 * β_c .
Note 2: CM = 1 for β_c/β_d =12/15, β_{hs}/β_c=24/15. For all other combinations of DPDCH, DPCCH, HS- DPCCH, E-DPDCH and E-DPCCH the MPR is based on the relative CM difference.
Note 3: For subtest 1 the β_c/β_d ratio of 11/15 for the TFC during the measurement period (TF1, TF0) is achieved by setting the signalled gain factors for the reference TFC (TF1, TF1) to β_c = 10/15 and β_d = 15/15.
Note 4: For subtest 5 the β_c/β_d ratio of 15/15 for the TFC during the measurement period (TF1, TF0) is achieved by setting the signalled gain factors for the reference TFC (TF1, TF1) to β_c = 14/15 and β_d = 15/15.
Note 5: In case of testing by UE using E-DPDCH Physical Layer category 1, Sub-test 3 is omitted according to TS25.306 Table 5.1g.
Note 6: β_{ed} can not be set directly, it is set by Absolute Grant Value.

Setup Configuration

<WCDMA Conducted Power>

Note:

1. Applying the subtest setup in Table C.11.1.3 of 3GPP TS 34.121-1 V9.1.0 to Rel. 6 HSPA.
2. Per KDB 941225 D01, RMC 12.2kbps setting is used to evaluate SAR. If HSDPA/HSUPA output power is < 0.25dB higher than RMC, HSDPA/HSUPA SAR evaluation can be excluded.
3. By design, HSDPA/HSUPA RF power will not be larger than RMC 12.2kbps, detailed information is included in Tune-up Procure exhibit.
4. It is expected by the manufacturer that MPR for some HSDPA/HSUPA subtests may differ from the specification of 3GPP, according to the chipset implementation in this model. The implementation and expected deviation are detailed in tune-up procedure exhibit.

WCDMA Band V Average power (dBm)										
Channel		4132	4182	4233	4132	4182	4233	4132	4182	4233
Frequency (MHz)		826.4	836.4	846.6	826.4	836.4	846.6	826.4	836.4	846.6
Mode		Without Power Back-off			With Power Back-off			Pwr. Reduction (dB)		
3GPP Rel 99	RMC 12.2Kbps	23.39	23.32	23.31	19.65	19.43	19.53	3.74	3.89	3.78
3GPP Rel 6	HSDPA Subtest-1	23.37	23.19	23.32	19.63	19.38	19.51	3.74	3.81	3.81
3GPP Rel 6	HSDPA Subtest-2	23.36	23.08	23.26	19.63	19.39	19.51	3.73	3.69	3.75
3GPP Rel 6	HSDPA Subtest-3	22.89	22.64	22.86	19.16	18.88	19.11	3.73	3.76	3.75
3GPP Rel 6	HSDPA Subtest-4	22.84	22.79	22.32	19.16	18.89	19.13	3.68	3.90	3.19
3GPP Rel 6	HSUPA Subtest-1	22.35	22.12	22.56	18.84	18.73	18.52	3.51	3.39	4.04
3GPP Rel 6	HSUPA Subtest-2	20.83	20.74	20.89	17.81	17.69	17.51	3.02	3.05	3.38
3GPP Rel 6	HSUPA Subtest-3	21.24	21.07	21.03	18.12	17.97	17.79	3.12	3.10	3.24
3GPP Rel 6	HSUPA Subtest-4	20.86	20.79	20.88	17.89	17.82	17.61	2.97	2.97	3.27
3GPP Rel 6	HSUPA Subtest-5	22.86	22.50	22.68	19.42	19.31	19.14	3.44	3.19	3.54

WCDMA Band V MPR Results (dB)								
Channel		4132	4182	4233	4132	4182	4233	3GPP MPR
Subtests		Without Power Back-off			With Power Back-off			(dB)
3GPP Rel 6	HSDPA Subtest-1	0.00	0.00	0.00	0.00	0.00	0.00	**0**
3GPP Rel 6	HSDPA Subtest-2	0.01	0.11	0.06	0.00	-0.01	0.00	**0**
3GPP Rel 6	HSDPA Subtest-3	0.48	0.55	0.46	0.47	0.50	0.40	**≤ 0.5**
3GPP Rel 6	HSDPA Subtest-4	0.53	0.40	1.00	0.47	0.49	0.38	**≤ 0.5**
3GPP Rel 6	HSUPA Subtest-1	0.51	0.38	0.12	0.58	0.58	0.62	**0**
3GPP Rel 6	HSUPA Subtest-2	2.03	1.76	1.79	1.61	1.62	1.63	**≤ 2**
3GPP Rel 6	HSUPA Subtest-3	1.62	1.43	1.65	1.30	1.34	1.35	**≤ 1**
3GPP Rel 6	HSUPA Subtest-4	2.00	1.71	1.80	1.53	1.49	1.53	**≤ 2**
3GPP Rel 6	HSUPA Subtest-5	0.00	0.00	0.00	0.00	0.00	0.00	**0**

WCDMA Band II Average power (dBm)										
Channel		9262	9400	9538	9262	9400	9538	9262	9400	9538
Frequency (MHz)		1852.4	1880.0	1907.6	1852.4	1880.0	1907.6	1852.4	1880.0	1907.6
Mode		Without Power Back-off			With Power Back-off			Pwr. Reduction (dB)		
3GPP Rel 99	RMC 12.2Kbps	22.12	22.02	21.84	15.39	15.34	15.38	6.73	6.68	6.46
3GPP Rel 6	HSDPA Subtest-1	22.08	22.00	21.83	15.37	15.31	15.36	6.71	6.69	6.47
3GPP Rel 6	HSDPA Subtest-2	22.06	21.99	21.82	15.35	15.30	15.33	6.71	6.69	6.49
3GPP Rel 6	HSDPA Subtest-3	21.63	21.60	21.41	14.19	14.16	14.18	7.44	7.44	7.23
3GPP Rel 6	HSDPA Subtest-4	21.59	21.55	21.37	14.17	14.13	14.16	7.42	7.42	7.21
3GPP Rel 6	HSUPA Subtest-1	21.51	21.44	21.29	14.59	14.52	14.55	6.92	6.92	6.74
3GPP Rel 6	HSUPA Subtest-2	20.46	20.41	20.21	13.78	13.72	13.76	6.68	6.69	6.45
3GPP Rel 6	HSUPA Subtest-3	20.68	20.60	20.44	13.89	13.84	13.86	6.79	6.76	6.58
3GPP Rel 6	HSUPA Subtest-4	20.57	20.53	20.37	13.67	13.63	13.65	6.90	6.90	6.72
3GPP Rel 6	HSUPA Subtest-5	21.89	21.84	21.63	14.81	14.68	14.73	7.08	7.16	6.90

WCDMA Band II MPR Results (dB)								
Channel		9262	9400	9538	9262	9400	9538	3GPP MPR
Subtests		Without Power Back-off			With Power Back-off			(dB)
3GPP Rel 6	HSDPA Subtest-1	0.00	0.00	0.00	0.00	0.00	0.00	**0**
3GPP Rel 6	HSDPA Subtest-2	0.02	0.01	0.01	0.02	0.01	0.03	**0**
3GPP Rel 6	HSDPA Subtest-3	0.45	0.40	0.42	1.18	1.15	1.18	**≤ 0.5**
3GPP Rel 6	HSDPA Subtest-4	0.49	0.45	0.46	1.20	1.18	1.20	**≤ 0.5**
3GPP Rel 6	HSUPA Subtest-1	0.38	0.40	0.34	0.22	0.16	0.18	**0**
3GPP Rel 6	HSUPA Subtest-2	1.43	1.43	1.42	1.03	0.96	0.97	**≤ 2**
3GPP Rel 6	HSUPA Subtest-3	1.21	1.24	1.19	0.92	0.84	0.87	**≤ 1**
3GPP Rel 6	HSUPA Subtest-4	1.32	1.31	1.26	1.14	1.05	1.08	**≤ 2**
3GPP Rel 6	HSUPA Subtest-5	0.00	0.00	0.00	0.00	0.00	0.00	**0**

Band		WCDMA Band IV Average power (dBm)								
Channel		1312	1413	1513	1312	1413	1513	1312	1413	1513
Frequency (MHz)		1712.4	1732.6	1752.6	1712.4	1732.6	1752.6	1712.4	1732.6	1752.6
Mode		Without Power Back-off			With Power Back-off			Pwr. Reduction (dB)		
3GPP Rel 99	RMC 12.2Kbps	22.51	22.44	22.24	14.39	14.37	14.35	8.12	8.07	7.89
3GPP Rel 6	HSDPA Subtest-1	22.48	22.43	22.21	14.29	14.27	14.25	8.19	8.16	7.96
3GPP Rel 6	HSDPA Subtest-2	22.49	22.43	22.22	14.24	14.22	14.20	8.25	8.21	8.02
3GPP Rel 6	HSDPA Subtest-3	22.04	21.99	21.79	13.71	13.68	13.65	8.33	8.31	8.14
3GPP Rel 6	HSDPA Subtest-4	22.02	21.96	21.76	13.70	13.66	13.62	8.32	8.30	8.14
3GPP Rel 6	HSUPA Subtest-1	21.70	21.60	21.45	14.36	14.31	14.28	7.34	7.29	7.17
3GPP Rel 6	HSUPA Subtest-2	20.68	20.61	20.46	13.26	13.21	13.13	7.42	7.40	7.33
3GPP Rel 6	HSUPA Subtest-3	20.85	20.76	20.59	13.49	13.47	13.36	7.36	7.29	7.23
3GPP Rel 6	HSUPA Subtest-4	20.70	20.60	20.47	13.18	13.15	13.09	7.52	7.45	7.38
3GPP Rel 6	HSUPA Subtest-5	22.25	22.13	22.02	14.38	14.35	14.29	7.87	7.78	7.73

Band		WCDMA Band IV MPR Results (dB)						
Channel		1312	1413	1513	1312	1413	1513	3GPP MPR
Subtests		Without Power Back-off			With Power Back-off			(dB)
3GPP Rel 6	HSDPA Subtest-1	0.00	0.00	0.00	0.00	0.00	0.00	**0**
3GPP Rel 6	HSDPA Subtest-2	-0.01	0.00	-0.01	0.05	0.05	0.05	**0**
3GPP Rel 6	HSDPA Subtest-3	0.44	0.44	0.42	0.58	0.59	0.60	**≤ 0.5**
3GPP Rel 6	HSDPA Subtest-4	0.46	0.47	0.45	0.59	0.61	0.63	**≤ 0.5**
3GPP Rel 6	HSUPA Subtest-1	0.55	0.53	0.57	0.02	0.04	0.01	**0**
3GPP Rel 6	HSUPA Subtest-2	1.57	1.52	1.56	1.12	1.14	1.16	**≤ 2**
3GPP Rel 6	HSUPA Subtest-3	1.40	1.37	1.43	0.89	0.88	0.93	**≤ 1**
3GPP Rel 6	HSUPA Subtest-4	1.55	1.53	1.55	1.20	1.20	1.20	**≤ 2**
3GPP Rel 6	HSUPA Subtest-5	0.00	0.00	0.00	0.00	0.00	0.00	**0**

<LTE band 17 Conducted Power>

		Without Power Back-off							With Power Back-off						
BW [MHz]	Mod / RB (Size - Offset)	Average Power. (dBm)			3GPP MPR	MPR Result (dB)			Average Power. (dBm)			3GPP MPR	MPR Result (dB)		
		Low Ch	Mid Ch	High Ch		Low Ch	Mid Ch	High Ch	Low Ch	Mid Ch	High Ch		Low Ch	Mid Ch	High Ch
	Channel	23780	23790	23800		23780	23790	23800	23780	23790	23800		23780	23790	23800
	Freq. (MHz)	709	710	711		709	710	711	709	710	711		709	710	711
10	QPSK 1-0	22.35	22.28	22.30	0	0.00	0.00	0.00	17.62	17.62	17.72	0	0.20	0.14	0.05
10	QPSK 1-24	22.33	22.27	22.29		0.02	0.01	0.01	**17.82**	17.76	17.77		0.00	0.00	0.00
10	QPSK 1-49	22.08	22.16	22.22		0.27	0.12	0.08	17.54	17.54	17.71		0.28	0.22	0.06
10	QPSK 25-0	21.87	21.40	21.40	≤ 1	0.48	0.88	0.90	16.92	16.77	16.88	≤ 1	0.90	0.99	0.89
10	QPSK 25-12	21.86	21.53	21.59		0.49	0.75	0.71	16.77	16.82	16.75		1.05	0.94	1.02
10	QPSK 25-24	21.80	21.43	21.43		0.55	0.85	0.87	16.54	16.68	16.81		1.28	1.08	0.96
10	QPSK 50-0	21.48	21.67	21.40		0.87	0.61	0.90	16.57	16.58	16.80		1.25	1.18	0.97
10	16QAM 1-0	21.88	21.87	21.82	≤ 1	0.47	0.41	0.48	16.73	16.46	16.69	≤ 1	1.09	1.30	1.08
10	16QAM 1-24	21.86	21.85	21.80		0.49	0.43	0.50	16.90	16.70	16.85		0.92	1.06	0.92
10	16QAM 1-49	21.76	21.80	21.64		0.59	0.48	0.66	16.70	16.57	16.59		1.12	1.19	1.18
10	16QAM 25-0	20.70	20.80	20.70	≤ 2	1.65	1.48	1.60	15.62	15.62	15.66	≤ 2	2.20	2.14	2.11
10	16QAM 25-12	20.77	20.87	20.75		1.58	1.41	1.55	15.75	15.80	15.70		2.07	1.96	2.07
10	16QAM 25-24	20.72	20.79	20.65		1.63	1.49	1.65	15.60	15.51	15.82		2.22	2.25	1.95
10	16QAM 50-0	20.41	20.30	20.48		1.94	1.98	1.82	15.48	15.67	15.63		2.34	2.09	2.14
	Channel	23755	23790	23825		23755	23790	23825	23755	23790	23825		23755	23790	23825
	Freq. (MHz)	706.5	710	713.5		706.5	710	713.5	706.5	710	713.5		706.5	710	713.5
5	QPSK 1-0	22.46	22.30	22.12	0	0.00	0.00	0.00	17.34	17.66	17.30	0	0.06	0.03	0.15
5	QPSK 1-12	22.40	22.25	22.03		0.06	0.05	0.09	17.40	17.69	17.45		0.00	0.00	0.00
5	QPSK 1-24	22.42	22.18	21.98		0.04	0.12	0.14	17.19	17.50	17.39		0.21	0.19	0.06
5	QPSK 12-0	21.56	21.40	21.17	≤ 1	0.90	0.90	0.95	16.21	16.51	16.31	≤ 1	1.19	1.18	1.14
5	QPSK 12-6	21.54	21.57	21.27		0.92	0.73	0.85	16.38	16.82	16.34		1.02	0.87	1.11
5	QPSK 12-11	21.58	21.35	21.15		0.88	0.95	0.97	16.20	16.69	16.22		1.20	1.00	1.23
5	QPSK 25-0	21.56	21.43	21.15		0.90	0.87	0.97	16.36	16.79	16.36		1.04	0.90	1.09
5	16QAM 1-0	21.86	21.87	21.88	≤ 1	0.60	0.43	0.24	16.42	16.77	16.75	≤ 1	0.98	0.92	0.70
5	16QAM 1-12	21.84	21.86	21.84		0.62	0.44	0.28	16.64	16.94	16.50		0.76	0.75	0.95
5	16QAM 1-24	21.80	21.84	21.78		0.66	0.46	0.34	16.39	16.46	16.67		1.01	1.23	0.78
5	16QAM 12-0	20.80	20.40	20.55	≤ 2	1.66	1.90	1.57	15.36	15.51	15.35	≤ 2	2.04	2.18	2.10
5	16QAM 12-6	20.95	20.53	20.67		1.51	1.77	1.45	15.49	15.83	15.37		1.91	1.86	2.08
5	16QAM 12-11	20.87	20.41	20.39		1.59	1.89	1.73	15.37	15.77	15.30		2.03	1.92	2.15
5	16QAM 25-0	20.69	20.64	20.57		1.77	1.66	1.55	15.31	15.79	15.31		2.09	1.90	2.14

Note:

1. Per KDB 941225 D05v02, start with the largest channel bandwidth and measure SAR for QPSK with 1 RB allocation, using the RB offset and *required test channel* combination with the highest maximum output power for RB offsets at the upper edge, middle and lower edge of each *required test channel*.
2. Per KDB 941225 D05v02, 50% RB allocation for QPSK SAR testing follows 1RB QPSK allocation procedure
3. 16QAM output power for each RB allocation configuration is not > ½ dB higher than the same configuration in QPSK
4. Smaller bandwidth output power for each RB allocation configuration is not > ½ dB higher than the same configuration in the largest supported bandwidth

		Power Reduction triggered by P-Sensor (dB)		
BW [MHz]	Mod / RB (Size - Offset)	Average Power. (dBm)		
		Low Ch	Mid Ch	High Ch
	Channel	23780	23790	23800
	Frequency (MHz)	709	710	711
10	QPSK 1-0	4.73	4.66	4.58
10	QPSK 1-24	4.51	4.51	4.52
10	QPSK 1-49	4.54	4.62	4.51
10	QPSK 25-0	4.95	4.63	4.52
10	QPSK 25-12	5.09	4.71	4.84
10	QPSK 25-24	5.26	4.75	4.62
10	QPSK 50-0	4.91	5.09	4.60
10	16QAM 1-0	5.15	5.41	5.13
10	16QAM 1-24	4.96	5.15	4.95
10	16QAM 1-49	5.06	5.23	5.05
10	16QAM 25-0	5.08	5.18	5.04
10	16QAM 25-12	5.02	5.07	5.05
10	16QAM 25-24	5.12	5.28	4.83
10	16QAM 50-0	4.93	4.63	4.85
	Channel	23755	23790	23825
	Frequency (MHz)	706.5	710	713.5
5	QPSK 1-0	5.12	4.64	4.82
5	QPSK 1-12	5.00	4.56	4.58
5	QPSK 1-24	5.23	4.68	4.59
5	QPSK 12-0	5.35	4.89	4.86
5	QPSK 12-6	5.16	4.75	4.93
5	QPSK 12-11	5.38	4.66	4.93
5	QPSK 25-0	5.20	4.64	4.79
5	16QAM 1-0	5.44	5.10	5.13
5	16QAM 1-12	5.20	4.92	5.34
5	16QAM 1-24	5.41	5.38	5.11
5	16QAM 12-0	5.44	4.89	5.20
5	16QAM 12-6	5.46	4.70	5.30
5	16QAM 12-11	5.50	4.64	5.09
5	16QAM 25-0	5.38	4.85	5.26

<LTE band 5 Conducted Power>

		Without Power Back-off							With Power Back-off						
BW [MHz]	Mod / RB (Size - Offset)	Average Power. (dBm)			3GPP MPR	MPR Result (dB)			Average Power. (dBm)			3GPP MPR	MPR Result (dB)		
		Low Ch	Mid Ch	High Ch		Low Ch	Mid Ch	High Ch	Low Ch	Mid Ch	High Ch		Low Ch	Mid Ch	High Ch
	Channel	20450	20525	20600		20450	20525	20600	20450	20525	20600		20450	20525	20600
	Freq. (MHz)	829	836.5	844		829	836.5	844	829	836.5	844		829	836.5	844
10	QPSK 1-0	**23.19**	23.09	23.16	0	0.00	0.00	0.00	**18.39**	18.18	18.24	0	0.00	0.20	0.15
10	QPSK 1-24	23.10	23.05	23.10		0.09	0.04	0.06	18.33	18.15	**18.39**		0.06	0.23	0.00
10	QPSK 1-49	23.11	22.92	22.90		0.08	0.17	0.26	18.04	18.38	18.05		0.35	0.00	0.34
10	QPSK 25-0	22.25	22.15	22.20	≤ 1	0.94	0.94	0.96	17.39	17.20	17.49	≤ 1	1.00	1.18	0.90
10	QPSK 25-12	22.20	22.10	22.23		0.99	0.99	0.93	17.31	17.40	17.38		1.08	0.98	1.01
10	QPSK 25-24	22.20	22.11	22.21		0.99	0.98	0.95	17.12	17.06	17.31		1.27	1.32	1.08
10	QPSK 50-0	22.31	22.09	22.24		0.88	1.00	0.92	17.22	17.07	17.06		1.17	1.31	1.33
10	16QAM 1-0	22.47	22.42	22.49	≤ 1	0.72	0.67	0.67	17.39	17.08	17.36	≤ 1	1.00	1.30	1.03
10	16QAM 1-24	22.45	22.40	22.40		0.74	0.69	0.76	17.35	17.39	17.38		1.04	0.99	1.01
10	16QAM 1-49	22.43	22.48	22.41		0.76	0.61	0.75	16.95	17.10	17.34		1.44	1.28	1.05
10	16QAM 25-0	21.25	21.45	21.25	≤ 2	1.94	1.64	1.91	16.00	16.39	16.41	≤ 2	2.39	1.99	1.98
10	16QAM 25-12	21.30	21.18	21.28		1.89	1.91	1.88	15.92	16.37	16.38		2.47	2.01	2.01
10	16QAM 25-24	21.26	21.20	21.29		1.93	1.89	1.87	15.91	16.09	16.23		2.48	2.29	2.16
10	16QAM 50-0	21.23	21.29	21.23		1.96	1.80	1.93	15.96	16.10	16.22		2.43	2.28	2.17
	Channel	20425	20525	20625		20425	20525	20625	20425	20525	20625		20425	20525	20625
	Freq. (MHz)	826.5	836.5	846.5		826.5	836.5	846.5	826.5	836.5	846.5		826.5	836.5	846.5
5	QPSK 1-0	23.11	22.99	23.17	0	0.00	0.00	0.00	17.84	17.70	17.68	0	0.13	0.30	0.22
5	QPSK 1-12	23.10	22.95	23.15		0.01	0.04	0.02	17.97	18.00	17.90		0.00	0.00	0.00
5	QPSK 1-24	23.05	22.66	22.92		0.06	0.33	0.25	17.55	17.72	17.52		0.42	0.28	0.38
5	QPSK 12-0	22.16	21.99	22.20	≤ 1	0.95	1.00	0.97	16.85	16.80	16.73	≤ 1	1.12	1.20	1.17
5	QPSK 12-6	22.15	22.00	22.22		0.96	0.99	0.95	16.97	17.01	16.83		1.00	0.99	1.07
5	QPSK 12-11	22.11	22.02	22.21		1.00	0.97	0.96	16.78	16.96	16.87		1.19	1.04	1.03
5	QPSK 25-0	22.12	22.03	22.18		0.99	0.96	0.99	16.79	16.82	16.70		1.18	1.18	1.20
5	16QAM 1-0	22.29	22.29	22.28	≤ 1	0.82	0.70	0.89	16.93	16.81	16.78	≤ 1	1.04	1.19	1.12
5	16QAM 1-12	22.25	22.28	22.26		0.86	0.71	0.91	17.06	17.22	17.24		0.91	0.78	0.66
5	16QAM 1-24	22.14	22.16	22.21		0.97	0.83	0.96	16.68	16.75	16.75		1.29	1.25	1.15
5	16QAM 12-0	21.20	21.25	21.28	≤ 2	1.91	1.74	1.89	15.76	15.77	15.78	≤ 2	2.21	2.23	2.12
5	16QAM 12-6	21.25	21.27	21.18		1.86	1.72	1.99	15.90	15.91	15.81		2.07	2.09	2.09
5	16QAM 12-11	21.15	21.20	21.19		1.96	1.79	1.98	15.72	16.01	15.88		2.25	1.99	2.02
5	16QAM 25-0	21.23	21.18	21.17		1.88	1.81	2.00	15.73	15.80	15.72		2.24	2.20	2.18
	Channel	20415	20525	20635		20415	20525	20635	20415	20525	20635		20415	20525	20635
	Freq. (MHz)	825.5	836.5	847.5		825.5	836.5	847.5	825.5	836.5	847.5		825.5	836.5	847.5
3	QPSK 1-0	22.99	22.88	23.06	0	0.00	0.00	0.00	17.72	17.62	17.63	0	0.19	0.33	0.20
3	QPSK 1-7	22.98	22.87	23.05		0.01	0.01	0.01	17.91	17.95	17.83		0.00	0.00	0.00
3	QPSK 1-14	22.95	22.57	22.84		0.04	0.31	0.22	17.50	17.65	17.49		0.41	0.30	0.34
3	QPSK 8-0	22.08	21.94	22.05	≤ 1	0.91	0.94	1.01	16.72	16.71	16.67	≤ 1	1.19	1.24	1.16
3	QPSK 8-4	22.02	21.92	22.10		0.97	0.96	0.96	16.87	16.96	16.80		1.04	0.99	1.03
3	QPSK 8-7	22.00	21.90	22.06		0.99	0.98	1.00	16.70	16.89	16.82		1.21	1.06	1.01
3	QPSK 15-0	21.98	21.93	22.09		1.01	0.95	0.97	16.70	16.74	16.65		1.21	1.21	1.18
3	16QAM 1-0	22.14	22.23	22.21	≤ 1	0.85	0.65	0.85	16.82	16.75	16.74	≤ 1	1.09	1.20	1.09
3	16QAM 1-7	22.12	22.20	22.13		0.87	0.68	0.93	16.99	17.12	17.16		0.92	0.83	0.67
3	16QAM 1-14	22.07	22.11	22.11		0.92	0.77	0.95	16.59	16.66	16.69		1.32	1.29	1.14
3	16QAM 8-0	21.14	21.12	21.20	≤ 2	1.85	1.76	1.86	15.66	15.71	15.77	≤ 2	2.25	2.24	2.06
3	16QAM 8-4	21.16	21.20	21.06		1.83	1.68	2.00	15.82	15.82	15.74		2.09	2.13	2.09
3	16QAM 8-7	21.04	21.15	21.10		1.95	1.73	1.96	15.59	15.90	15.85		2.32	2.05	1.98
3	16QAM 15-0	21.14	21.11	21.10		1.85	1.77	1.96	15.68	15.73	15.65		2.23	2.22	2.18

Note:

1. Per KDB 941225 D05v02, start with the largest channel bandwidth and measure SAR for QPSK with 1 RB allocation, using the RB offset and *required test channel* combination with the highest maximum output power for RB offsets at the upper edge, middle and lower edge of each *required test channel*.
2. Per KDB 941225 D05v02, 50% RB allocation for QPSK SAR testing follows 1RB QPSK allocation procedure.
3. 16QAM output power for each RB allocation configuration is not > ½ dB higher than the same configuration in QPSK
4. Smaller bandwidth output power for each RB allocation configuration is not > ½ dB higher than the same configuration in the largest supported bandwidth

		Power Reduction triggered by P-Sensor (dB)		
BW [MHz]	Mod / RB (Size - Offset)	Average Power. (dBm)		
		Low Ch	Mid Ch	High Ch
	Channel	20450	20525	20600
	Frequency (MHz)	829	836.5	844
10	QPSK 1-0	4.80	4.91	4.92
10	QPSK 1-24	4.77	4.90	4.71
10	QPSK 1-49	5.07	4.54	4.85
10	QPSK 25-0	4.86	4.95	4.71
10	QPSK 25-12	4.89	4.70	4.85
10	QPSK 25-24	5.08	5.05	4.90
10	QPSK 50-0	5.09	5.02	5.18
10	16QAM 1-0	5.08	5.34	5.13
10	16QAM 1-24	5.10	5.01	5.02
10	16QAM 1-49	5.48	5.38	5.07
10	16QAM 25-0	5.25	5.06	4.84
10	16QAM 25-12	5.38	4.81	4.90
10	16QAM 25-24	5.35	5.11	5.06
10	16QAM 50-0	5.27	5.19	5.01
	Channel	20425	20525	20625
	Frequency (MHz)	826.5	836.5	846.5
5	QPSK 1-0	5.27	5.29	5.49
5	QPSK 1-12	5.13	4.95	5.25
5	QPSK 1-24	5.50	4.94	5.40
5	QPSK 12-0	5.31	5.19	5.47
5	QPSK 12-6	5.18	4.99	5.39
5	QPSK 12-11	5.33	5.06	5.34
5	QPSK 25-0	5.33	5.21	5.48
5	16QAM 1-0	5.36	5.48	5.50
5	16QAM 1-12	5.19	5.06	5.02
5	16QAM 1-24	5.46	5.41	5.46
5	16QAM 12-0	5.44	5.48	5.50
5	16QAM 12-6	5.35	5.36	5.37
5	16QAM 12-11	5.43	5.19	5.31
5	16QAM 25-0	5.50	5.38	5.45
	Channel	20415	20525	20635
	Frequency (MHz)	825.5	836.5	847.5
3	QPSK 1-0	5.27	5.26	5.43
3	QPSK 1-7	5.07	4.92	5.22
3	QPSK 1-14	5.45	4.92	5.35
3	QPSK 8-0	5.36	5.23	5.38
3	QPSK 8-4	5.15	4.96	5.30
3	QPSK 8-7	5.30	5.01	5.24
3	QPSK 15-0	5.28	5.19	5.44
3	16QAM 1-0	5.32	5.48	5.47
3	16QAM 1-7	5.13	5.08	4.97
3	16QAM 1-14	5.48	5.45	5.42
3	16QAM 8-0	5.48	5.41	5.43
3	16QAM 8-4	5.34	5.38	5.32
3	16QAM 8-7	5.45	5.25	5.25
3	16QAM 15-0	5.46	5.38	5.45

<LTE band 4 Conducted Power>

		Without Power Back-off							With Power Back-off						
BW [MHz]	Mod / RB (Size - Offset)	Average Power. (dBm)			3GPP MPR	MPR Result (dB)			Average Power. (dBm)			3GPP MPR	MPR Result (dB)		
		Low Ch	Mid Ch	High Ch		Low Ch	Mid Ch	High Ch	Low Ch	Mid Ch	High Ch		Low Ch	Mid Ch	High Ch
	Channel	20000	20175	20350		20000	20175	20350	20000	20175	20350		20000	20175	20350
	Freq. (MHz)	1715	1732.5	1750		1715	1732.5	1750	1715	1732.5	1750		1715	1732.5	1750
10	QPSK 1-0	21.82	21.88	21.80	0	0.05	0.08	0.06	14.49	14.44	14.82	0	0.21	0.16	0.07
10	QPSK 1-24	21.86	21.86	21.84		0.01	0.10	0.02	14.40	14.38	14.46		0.30	0.22	0.43
10	QPSK 1-49	21.87	**21.96**	21.86		0.00	0.00	0.00	14.70	14.60	**14.89**		0.00	0.00	0.00
10	QPSK 25-0	21.20	21.15	21.10	≤ 1	0.67	0.81	0.76	13.73	13.84	13.89	≤ 1	0.97	0.76	1.00
10	QPSK 25-12	21.22	21.22	21.11		0.65	0.74	0.75	13.76	13.83	13.82		0.94	0.77	1.07
10	QPSK 25-24	21.23	21.16	21.05		0.64	0.80	0.81	13.76	13.70	13.80		0.94	0.90	1.09
10	QPSK 50-0	21.28	21.08	21.07		0.59	0.88	0.79	13.79	13.78	13.82		0.91	0.82	1.07
10	16QAM 1-0	21.17	21.15	21.28	≤ 1	0.70	0.81	0.58	13.83	13.66	13.84	≤ 1	0.87	0.94	1.05
10	16QAM 1-24	21.05	21.14	21.20		0.82	0.82	0.66	13.60	13.67	13.70		1.10	0.93	1.19
10	16QAM 1-49	20.97	21.10	21.34		0.90	0.86	0.52	13.88	13.68	13.86		0.82	0.92	1.03
10	16QAM 25-0	20.40	20.36	20.40	≤ 2	1.47	1.60	1.46	12.93	12.92	12.92	≤ 2	1.77	1.68	1.97
10	16QAM 25-12	20.38	20.32	20.38		1.49	1.64	1.48	12.88	12.84	12.97		1.82	1.76	1.92
10	16QAM 25-24	20.33	20.28	20.35		1.54	1.68	1.51	12.85	12.80	12.93		1.85	1.80	1.96
10	16QAM 50-0	20.41	20.39	20.38		1.46	1.57	1.48	12.95	12.93	12.96		1.75	1.67	1.93
	Channel	19975	20175	20375		19975	20175	20375	19975	20175	20375		19975	20175	20375
	Freq. (MHz)	1712.5	1732.5	1752.5		1712.5	1732.5	1752.5	1712.5	1732.5	1752.5		1712.5	1732.5	1752.5
5	QPSK 1-0	21.88	21.87	21.86	0	0.00	0.00	0.00	14.46	14.70	14.82	0	0.01	0.10	0.01
5	QPSK 1-12	21.86	21.86	21.84		0.02	0.01	0.02	14.36	14.40	14.80		0.11	0.40	0.03
5	QPSK 1-24	21.87	21.84	21.85		0.01	0.03	0.01	14.47	14.80	14.83		0.00	0.00	0.00
5	QPSK 12-0	21.35	21.37	21.40	≤ 1	0.53	0.50	0.46	13.88	13.91	13.91	≤ 1	0.59	0.89	0.92
5	QPSK 12-6	21.40	21.38	21.30		0.48	0.49	0.56	13.97	13.94	13.87		0.50	0.86	0.96
5	QPSK 12-11	21.22	21.35	21.35		0.66	0.52	0.51	13.87	13.90	13.96		0.60	0.90	0.87
5	QPSK 25-0	21.38	21.24	21.28		0.50	0.63	0.58	13.93	13.79	13.86		0.54	1.01	0.97
5	16QAM 1-0	21.39	21.38	21.28	≤ 1	0.49	0.49	0.58	13.94	13.89	13.89	≤ 1	0.53	0.91	0.94
5	16QAM 1-12	21.35	21.37	21.25		0.53	0.50	0.61	13.86	13.87	13.91		0.61	0.93	0.92
5	16QAM 1-24	21.32	21.31	21.42		0.56	0.56	0.44	13.88	13.86	13.97		0.59	0.94	0.86
5	16QAM 12-0	20.31	20.35	20.46	≤ 2	1.57	1.52	1.40	12.83	12.92	12.99	≤ 2	1.64	1.88	1.84
5	16QAM 12-6	20.31	20.43	20.35		1.57	1.44	1.51	12.87	12.98	12.96		1.60	1.82	1.87
5	16QAM 12-11	20.39	20.30	20.36		1.49	1.57	1.50	12.96	12.81	12.90		1.51	1.99	1.93
5	16QAM 25-0	20.38	20.43	20.39		1.50	1.44	1.47	12.97	12.97	12.98		1.50	1.83	1.85

Note:

1. Per KDB 941225 D05v02, start with the largest channel bandwidth and measure SAR for QPSK with 1 RB allocation, using the RB offset and *required test channel* combination with the highest maximum output power for RB offsets at the upper edge, middle and lower edge of each *required test channel*.
2. Per KDB 941225 D05v02, 50% RB allocation for QPSK SAR testing follows 1RB QPSK allocation procedure
3. 16QAM output power for each RB allocation configuration is not > ½ dB higher than the same configuration in QPSK
4. Smaller bandwidth output power for each RB allocation configuration is not > ½ dB higher than the same configuration in the largest supported bandwidth

		Power Reduction triggered by P-Sensor (dB)		
BW [MHz]	Mod / RB (Size - Offset)	Average Power. (dBm)		
		Low Ch	Mid Ch	High Ch
	Channel	20000	20175	20350
	Frequency (MHz)	1715	1732.5	1750
10	QPSK 1-0	7.33	7.44	6.98
10	QPSK 1-24	7.46	7.48	7.38
10	QPSK 1-49	7.17	7.36	6.97
10	QPSK 25-0	7.47	7.31	7.21
10	QPSK 25-12	7.46	7.39	7.29
10	QPSK 25-24	7.47	7.46	7.25
10	QPSK 50-0	7.49	7.30	7.25
10	16QAM 1-0	7.34	7.49	7.44
10	16QAM 1-24	7.45	7.47	7.50
10	16QAM 1-49	7.09	7.42	7.48
10	16QAM 25-0	7.47	7.44	7.48
10	16QAM 25-12	7.50	7.48	7.41
10	16QAM 25-24	7.48	7.48	7.42
10	16QAM 50-0	7.46	7.46	7.42
	Channel	19975	20175	20375
	Frequency (MHz)	1712.5	1732.5	1752.5
5	QPSK 1-0	7.42	7.17	7.04
5	QPSK 1-12	7.50	7.46	7.04
5	QPSK 1-24	7.40	7.04	7.02
5	QPSK 12-0	7.47	7.46	7.49
5	QPSK 12-6	7.43	7.44	7.43
5	QPSK 12-11	7.35	7.45	7.39
5	QPSK 25-0	7.45	7.45	7.42
5	16QAM 1-0	7.45	7.49	7.39
5	16QAM 1-12	7.49	7.50	7.34
5	16QAM 1-24	7.44	7.45	7.45
5	16QAM 12-0	7.48	7.43	7.47
5	16QAM 12-6	7.44	7.45	7.39
5	16QAM 12-11	7.43	7.49	7.46
5	16QAM 25-0	7.41	7.46	7.41

<LTE band 2 Conducted Power>

		Without Power Back-off							With Power Back-off						
BW [MHz]	Mod / RB (Size - Offset)	Average Power. (dBm)			3GPP MPR	MPR Result (dB)			Average Power. (dBm)			3GPP MPR	MPR Result (dB)		
		Low Ch	Mid Ch	High Ch		Low Ch	Mid Ch	High Ch	Low Ch	Mid Ch	High Ch		Low Ch	Mid Ch	High Ch
	Channel	18650	18900	19150		18650	18900	19150	18650	18900	19150		18650	18900	19150
	Freq. (MHz)	1855	1880	1905		1855	1880	1905	1855	1880	1905		1855	1880	1905
10	QPSK 1-0	22.53	22.80	22.68	0	0.27	0.08	0.13	15.55	15.57	15.57	0	0.34	0.42	0.19
10	QPSK 1-24	22.80	**22.88**	22.81		0.00	0.00	0.00	15.89	**15.99**	15.76		0.00	0.00	0.00
10	QPSK 1-49	22.52	22.65	22.70		0.28	0.23	0.11	15.48	15.80	15.55		0.41	0.19	0.21
10	QPSK 25-0	21.82	21.87	21.74	≤ 1	0.98	1.01	1.07	14.52	14.68	14.55	≤ 1	1.37	1.31	1.21
10	QPSK 25-12	21.72	21.91	21.77		1.08	0.97	1.04	14.47	14.86	14.58		1.42	1.13	1.18
10	QPSK 25-24	21.73	21.90	21.73		1.07	0.98	1.08	14.42	14.75	14.60		1.47	1.24	1.16
10	QPSK 50-0	21.59	21.94	21.69		1.21	0.94	1.12	14.45	14.76	14.57		1.44	1.23	1.19
10	16QAM 1-0	21.99	21.86	21.57	≤ 1	0.81	1.02	1.24	14.88	14.85	14.85	≤ 1	1.01	1.14	0.91
10	16QAM 1-24	21.88	21.93	21.58		0.92	0.95	1.23	14.89	14.88	14.89		1.00	1.11	0.87
10	16QAM 1-49	21.76	21.90	21.56		1.04	0.98	1.25	14.86	14.83	14.87		1.03	1.16	0.89
10	16QAM 25-0	20.75	20.88	20.65	≤ 2	2.05	2.00	2.16	13.41	13.57	13.38	≤ 2	2.48	2.42	2.38
10	16QAM 25-12	20.68	20.83	20.64		2.12	2.05	2.17	13.39	13.81	13.38		2.50	2.18	2.38
10	16QAM 25-24	20.71	20.76	20.63		2.09	2.12	2.18	13.42	13.69	13.41		2.47	2.30	2.35
10	16QAM 50-0	20.59	20.65	20.41		2.21	2.23	2.40	13.45	13.63	13.39		2.44	2.36	2.37
	Channel	18625	18900	19175		18625	18900	19175	18625	18900	19175		18625	18900	19175
	Freq. (MHz)	1852.5	1880	1907.5		1852.5	1880	1907.5	1852.5	1880	1907.5		1852.5	1880	1907.5
5	QPSK 1-0	22.40	22.76	22.71	0	0.21	0.11	0.16	15.32	15.55	15.70	0	0.11	0.18	0.15
5	QPSK 1-12	22.61	22.87	22.87		0.00	0.00	0.00	15.43	15.73	15.85		0.00	0.00	0.00
5	QPSK 1-24	22.56	22.85	22.78		0.05	0.02	0.09	15.30	15.69	15.75		0.13	0.04	0.10
5	QPSK 12-0	21.68	21.81	21.94	≤ 1	0.93	1.06	0.93	14.34	14.71	14.69	≤ 1	1.09	1.02	1.16
5	QPSK 12-6	21.69	21.83	21.86		0.92	1.04	1.01	14.54	14.80	14.82		0.89	0.93	1.03
5	QPSK 12-11	21.56	21.75	21.92		1.05	1.12	0.95	14.32	14.74	14.63		1.11	0.99	1.22
5	QPSK 25-0	21.63	21.71	21.87		0.98	1.16	1.00	14.42	14.89	14.73		1.01	0.84	1.12
5	16QAM 1-0	21.76	21.94	21.79	≤ 1	0.85	0.93	1.08	14.60	14.86	14.83	≤ 1	0.83	0.87	1.02
5	16QAM 1-12	21.81	21.95	21.97		0.80	0.92	0.90	14.63	14.88	14.86		0.80	0.85	0.99
5	16QAM 1-24	21.83	21.93	21.95		0.78	0.94	0.92	14.54	14.83	14.85		0.89	0.90	1.00
5	16QAM 12-0	20.52	20.64	20.80	≤ 2	2.09	2.23	2.07	13.50	13.71	13.78	≤ 2	1.93	2.02	2.07
5	16QAM 12-6	20.45	20.61	20.81		2.16	2.26	2.06	13.45	13.76	13.77		1.98	1.97	2.08
5	16QAM 12-11	20.47	20.60	20.80		2.14	2.27	2.07	13.38	13.71	13.62		2.05	2.02	2.23
5	16QAM 25-0	20.48	20.76	20.92		2.13	2.11	1.95	13.39	13.74	13.75		2.04	1.99	2.10
	Channel	18615	18900	19185		18615	18900	19185	18615	18900	19185		18615	18900	19185
	Freq. (MHz)	1851.5	1880	1908.5		1851.5	1880	1908.5	1851.5	1880	1908.5		1851.5	1880	1908.5
3	QPSK 1-0	22.34	22.69	22.61	0	0.20	0.13	0.13	15.26	15.45	15.58	0	0.12	0.17	0.14
3	QPSK 1-7	22.54	22.82	22.74		0.00	0.00	0.00	15.38	15.62	15.72		0.00	0.00	0.00
3	QPSK 1-14	22.51	22.76	22.70		0.03	0.06	0.04	15.25	15.61	15.65		0.13	0.01	0.07
3	QPSK 8-0	21.63	21.76	21.89	≤ 1	0.91	1.06	0.85	14.27	14.65	14.61	≤ 1	1.11	0.97	1.11
3	QPSK 8-4	21.62	21.76	21.73		0.92	1.06	1.01	14.46	14.72	14.72		0.92	0.90	1.00
3	QPSK 8-7	21.53	21.67	21.81		1.01	1.15	0.93	14.23	14.65	14.57		1.15	0.97	1.15
3	QPSK 15-0	21.59	21.62	21.80		0.95	1.20	0.94	14.32	14.82	14.61		1.06	0.80	1.11
3	16QAM 1-0	21.71	21.89	21.71	≤ 1	0.83	0.93	1.03	14.54	14.80	14.75	≤ 1	0.84	0.82	0.97
3	16QAM 1-7	21.74	21.91	21.92		0.80	0.91	0.82	14.56	14.80	14.76		0.82	0.82	0.96
3	16QAM 1-14	21.81	21.90	21.85		0.73	0.92	0.89	14.45	14.73	14.74		0.93	0.89	0.98
3	16QAM 8-0	20.44	20.56	20.69	≤ 2	2.10	2.26	2.05	13.45	13.59	13.64	≤ 2	1.93	2.03	2.08
3	16QAM 8-4	20.42	20.56	20.75		2.12	2.26	1.99	13.37	13.67	13.68		2.01	1.95	2.04
3	16QAM 8-7	20.41	20.53	20.72		2.13	2.29	2.02	13.29	13.62	13.54		2.09	2.00	2.18
3	16QAM 15-0	20.44	20.73	20.80		2.10	2.09	1.94	13.33	13.68	13.70		2.05	1.94	2.02

Note:

1. Per KDB 941225 D05v02, start with the largest channel bandwidth and measure SAR for QPSK with 1 RB allocation, using the RB offset and *required test channel* combination with the highest maximum output power for RB offsets at the upper edge, middle and lower edge of each *required test channel*.
2. Per KDB 941225 D05v02, 50% RB allocation for QPSK SAR testing follows 1RB QPSK allocation procedure
3. 16QAM output power for each RB allocation configuration is not > ½ dB higher than the same configuration in QPSK
4. Smaller bandwidth output power for each RB allocation configuration is not > ½ dB higher than the same configuration in the largest supported bandwidth

		Power Reduction triggered by P-Sensor (dB)		
BW [MHz]	Mod / RB (Size - Offset)	Average Power. (dBm)		
		Low Ch	Mid Ch	High Ch
	Channel	18650	18900	19150
	Frequency (MHz)	1855	1880	1905
10	QPSK 1-0	6.98	7.23	7.11
10	QPSK 1-24	6.91	6.89	7.05
10	QPSK 1-49	7.04	6.85	7.15
10	QPSK 25-0	7.30	7.19	7.19
10	QPSK 25-12	7.25	7.05	7.19
10	QPSK 25-24	7.31	7.15	7.13
10	QPSK 50-0	7.14	7.18	7.12
10	16QAM 1-0	7.11	7.01	6.72
10	16QAM 1-24	6.99	7.05	6.69
10	16QAM 1-49	6.90	7.07	6.69
10	16QAM 25-0	7.34	7.31	7.27
10	16QAM 25-12	7.29	7.02	7.26
10	16QAM 25-24	7.29	7.07	7.22
10	16QAM 50-0	7.14	7.02	7.02
	Channel	18625	18900	19175
	Frequency (MHz)	1852.5	1880	1907.5
5	QPSK 1-0	7.08	7.21	7.01
5	QPSK 1-12	7.18	7.14	7.02
5	QPSK 1-24	7.26	7.16	7.03
5	QPSK 12-0	7.34	7.10	7.25
5	QPSK 12-6	7.15	7.03	7.04
5	QPSK 12-11	7.24	7.01	7.29
5	QPSK 25-0	7.21	6.82	7.14
5	16QAM 1-0	7.16	7.08	6.96
5	16QAM 1-12	7.18	7.07	7.11
5	16QAM 1-24	7.29	7.10	7.10
5	16QAM 12-0	7.02	6.93	7.02
5	16QAM 12-6	7.00	6.85	7.04
5	16QAM 12-11	7.09	6.89	7.18
5	16QAM 25-0	7.09	7.02	7.17
	Channel	18615	18900	19185
	Frequency (MHz)	1851.5	1880	1908.5
3	QPSK 1-0	7.08	7.24	7.03
3	QPSK 1-7	7.16	7.20	7.02
3	QPSK 1-14	7.26	7.15	7.05
3	QPSK 8-0	7.36	7.11	7.28
3	QPSK 8-4	7.16	7.04	7.01
3	QPSK 8-7	7.30	7.02	7.24
3	QPSK 15-0	7.27	6.80	7.19
3	16QAM 1-0	7.17	7.09	6.96
3	16QAM 1-7	7.18	7.11	7.16
3	16QAM 1-14	7.36	7.17	7.11
3	16QAM 8-0	6.99	6.97	7.05
3	16QAM 8-4	7.05	6.89	7.07
3	16QAM 8-7	7.12	6.91	7.18
3	16QAM 15-0	7.11	7.05	7.10

<WLAN 2.4G >

Mode	Channel	Frequency (MHz)	Average power (dBm)			
			Data Rate (bps)			
			1M	2M	5.5M	11M
802.11b	CH 01	2412	12.88	12.56	12.77	12.72
	CH 06	2437	12.82	12.22	12.88	12.78
	CH 11	2462	**12.92**	12.18	12.89	12.85

Mode	Channel	Frequency (MHz)	Average power (dBm)							
			Data Rate (bps)							
			6M	9M	12M	18M	24M	36M	48M	54M
802.11g	CH 01	2412	**12.27**	11.96	11.97	12.11	12.05	12.11	12.16	12.2
	CH 06	2437	12.12	11.76	11.78	11.89	11.91	11.97	11.96	11.96
	CH 11	2462	11.97	12.07	11.82	11.74	11.74	11.72	11.61	11.89

Mode	Channel	Frequency (MHz)	Average power (dBm)							
			MCS Index							
			MCS0	MCS1	MCS2	MCS3	MCS4	MCS5	MCS6	MCS7
802.11n 20M	CH 01	2412	11.96	12.08	11.89	**12.14**	11.98	12.13	12.08	12.11
	CH 06	2437	12.12	11.96	11.92	12.02	12.11	11.96	12.08	12.02
	CH 11	2462	11.7	11.86	11.72	12.04	12.02	11.89	11.86	11.76

Note:

1. Per KDB 248227 Rev1.2, choose the highest output power channel to test SAR and determine further SAR exclusion
2. Per KDB 248227 Rev1.2, 11g and 11n-HT20 output power is less than 1/4 dB higher than 11b mode, thus the SAR can be excluded.
3. For each frequency band, testing at higher data rates and higher order modulations is not required when the maximum average output power for each of these configurations is less than 1/4 dB higher than those measured at the lowest data rate.

11. SAR Test Results

11.1 Test Records for Body SAR Test

<General Note>

1. For the exposure positions that proximity sensor power reduction is applied for SAR compliance, additional SAR testing with EUT transmitting full power in normal mode was performed; 1.4cm for bottom face, 1.1cm for Edge1
2. Per KDB 447498 D01v05, for each exposure position, if the highest output channel reported SAR other channels SAR testing are not necessary.
3. Considering the curvature transition from bottom face to the edge, SAR testing at the curvature was performed. The SAR test setup is included in test setup photo exhibit, and the details of the curvature is included in operation description exhibit.

<GSM SAR>

Plot No.	Band	Mode	Test Position	Gap (cm)	Ch.	Freq. (MHz)	Burst Average Power (dBm)	Tune-up Limit (dBm)	Tune-up Scaling Factor	Power Back-off	Power Drift (dB)	SAR_{1g} (W/kg)	Tune-up Scaled 1g SAR
12	GSM850	GPRS (2 Tx slots)	Bottom Face	1.4cm	251	848.8	30.51	31	1.119	OFF	-0.03	0.188	0.21
13	GSM850	GPRS (2 Tx slots)	Edge1	1.1cm	251	848.8	30.51	31	1.119	OFF	-0.02	0.149	0.167
14	GSM850	GPRS (2 Tx slots)	Edge2	0cm	251	848.8	30.51	31	1.119	OFF	0	0.064	0.072
126	GSM850	GPRS (2 Tx slots)	Bottom Face	0cm	251	848.8	27.69	28	1.074	ON	0.01	0.83	0.891
127	GSM850	GPRS (2 Tx slots)	Bottom Face	0cm	128	824.2	27.46	28	1.132	ON	0.11	0.961	1.088
165	**GSM850**	**GPRS (2 Tx slots)**	**Bottom Face**	**0cm**	**128**	**824.2**	**27.46**	**28**	**1.132**	**ON**	**-0.01**	**0.997**	**1.129**
128	GSM850	GPRS (2 Tx slots)	Bottom Face	0cm	189	836.4	27.67	28	1.079	ON	-0.04	0.863	0.931
129	GSM850	GPRS (2 Tx slots)	Edge 1	0cm	251	848.8	27.69	28	1.074	ON	-0.11	0.666	0.715
135	GSM850	GPRS (2 Tx slots)	Curved surface of Edge 1	0cm	251	848.8	27.69	28	1.074	ON	-0.1	0.824	0.885
162	GSM850	GPRS (2 Tx slots)	Curved surface of Edge 1	0cm	128	824.2	27.46	28	1.132	ON	-0.11	0.694	0.786
163	GSM850	GPRS (2 Tx slots)	Curved surface of Edge 1	0cm	189	836.4	27.67	28	1.079	ON	-0.11	0.737	0.795
19	GSM1900	GPRS (2 Tx slots)	Bottom Face	1.4cm	661	1880	27.33	29	1.469	OFF	0.06	0.244	0.358
20	GSM1900	GPRS (2 Tx slots)	Edge 1	1.1cm	661	1880	27.33	29	1.469	OFF	0.02	0.537	0.789
21	GSM1900	GPRS (2 Tx slots)	Edge 2	0cm	661	1880	27.33	29	1.469	OFF	-0.02	0.156	0.229
15	GSM1900	GPRS (2 Tx slots)	Bottom Face	0cm	661	1880	20.96	21.5	1.132	ON	-0.03	0.38	0.430
16	GSM1900	GPRS (2 Tx slots)	Edge 1	0cm	661	1880	20.96	21.5	1.132	ON	0.06	0.811	0.918
17	GSM1900	GPRS (2 Tx slots)	Edge 1	0cm	512	1850.2	20.81	21.5	1.172	ON	0.05	0.71	0.832
18	GSM1900	GPRS (2 Tx slots)	Edge 1	0cm	810	1909.8	20.94	21.5	1.138	ON	-0.04	0.75	0.853
102	**GSM1900**	**GPRS (2 Tx slots)**	**Curved surface of Edge 1**	**0cm**	**661**	**1880**	**20.96**	**21.5**	**1.132**	**ON**	**-0.025**	**0.909**	**1.029**
166	GSM1900	GPRS (2 Tx slots)	Curved surface of Edge 1	0cm	661	1880	20.96	21.5	1.132	ON	-0.18	0.85	0.963
104	GSM1900	GPRS (2 Tx slots)	Curved surface of Edge 1	0cm	512	1850.2	20.81	21.5	1.172	ON	0.05	0.68	0.797
105	GSM1900	GPRS (2 Tx slots)	Curved surface of Edge 1	0cm	810	1909.8	20.94	21.5	1.138	ON	0.03	0.667	0.759

<WCDMA SAR>

Plot No.	Band	Mode	Test Position	Gap (cm)	Ch.	Freq. (MHz)	Average Power (dBm)	Tune-up Limit (dBm)	Tune-up Scaling Factor	Power Back-off	Power Drift (dB)	SAR_{1g} (W/kg)	Tune-up Scaled 1g SAR
136	WCDMA V	RMC12.2K	Bottom Face	1.4cm	4132	826.4	23.39	24	1.151	OFF	-0.01	0.269	0.310
137	WCDMA V	RMC12.2K	Edge1	1.1cm	4132	826.4	23.39	24	1.151	OFF	-0.01	0.257	0.296
138	WCDMA V	RMC12.2K	Edge2	0cm	4132	826.4	23.39	24	1.151	OFF	-0.12	0.196	0.226
130	**WCDMA V**	**RMC12.2K**	**Bottom Face**	**0cm**	**4132**	**826.4**	**19.65**	**20**	**1.084**	**ON**	**-0.18**	**0.976**	**1.058**
167	WCDMA V	RMC12.2K	Bottom Face	0cm	4132	826.4	19.65	20	1.084	ON	-0.07	0.972	1.054
131	WCDMA V	RMC12.2K	Bottom Face	0cm	4182	836.4	19.43	20	1.140	ON	-0.02	0.625	0.713
132	WCDMA V	RMC12.2K	Bottom Face	0cm	4233	846.6	19.53	20	1.114	ON	-0.05	0.944	1.052
133	WCDMA V	RMC12.2K	Edge 1	0cm	4132	826.4	19.65	20	1.084	ON	-0.13	0.566	0.614
134	WCDMA V	RMC12.2K	Curved surface of Edge 1	0cm	4132	826.4	19.53	20	1.114	ON	-0.08	0.755	0.841
164	WCDMA V	RMC12.2K	Curved surface of Edge 1	0cm	4182	836.4	19.43	20	1.140	ON	-0.09	0.589	0.672
165	WCDMA V	RMC12.2K	Curved surface of Edge 1	0cm	4233	846.6	19.53	20	1.114	ON	-0.05	0.725	0.808
24	WCDMA IV	RMC12.2K	Bottom Face	1.4cm	1312	1712.4	22.51	23	1.119	OFF	0.02	0.446	0.499
25	WCDMA IV	RMC12.2K	Edge 1	1.1cm	1312	1712.4	22.51	23	1.119	OFF	-0.04	1.05	1.175
26	WCDMA IV	RMC12.2K	Edge 1	1.1cm	1413	1732.6	22.44	23	1.138	OFF	-0.12	0.875	0.995
27	**WCDMA IV**	**RMC12.2K**	**Edge 1**	**1.1cm**	**1513**	**1752.6**	**22.24**	**23**	**1.191**	**OFF**	**-0.026**	**1.09**	**1.298**
27	WCDMA IV	RMC12.2K	Edge 1	1.1cm	1513	1752.6	22.24	23	1.191	OFF	-0.17	1.07	1.275
168	WCDMA IV	RMC12.2K	Edge 2	0cm	1312	1712.4	22.51	23	1.119	OFF	-0.15	0.16	0.179
23	WCDMA IV	RMC12.2K	Bottom Face	0cm	1312	1712.4	14.39	14.5	1.026	ON	0.01	0.469	0.481
22	WCDMA IV	RMC12.2K	Edge 1	0cm	1312	1712.4	14.39	14.5	1.026	ON	0.03	0.737	0.756
106	WCDMA IV	RMC12.2K	Curved surface of Edge 1	0cm	1312	1712.4	14.39	14.5	1.026	ON	0.02	0.777	0.797
33	WCDMA II	RMC12.2K	Bottom Face	1.4cm	9262	1852.4	22.12	23	1.225	OFF	0.09	0.338	0.414
34	WCDMA II	RMC12.2K	Edge 1	1.1cm	9262	1852.4	22.12	23	1.225	OFF	0.01	0.576	0.705
35	WCDMA II	RMC12.2K	Edge 2	0cm	9262	1852.4	22.12	23	1.225	OFF	-0.01	0.171	0.209
29	WCDMA II	RMC12.2K	Bottom Face	0cm	9262	1852.4	15.39	15.5	1.026	ON	0	0.64	0.656
30	WCDMA II	RMC12.2K	Edge 1	0cm	9262	1852.4	15.39	15.5	1.026	ON	-0.03	0.776	0.796
109	WCDMA II	RMC12.2K	Curved surface of Edge 1	0cm	9262	1852.4	15.39	15.5	1.026	ON	0.03	1.01	1.036
110	WCDMA II	RMC12.2K	Curved surface of Edge 1	0cm	9400	1880	15.34	15.5	1.038	ON	0.13	1.1	1.141
111	WCDMA II	RMC12.2K	Curved surface of Edge 1	0cm	9538	1907.6	15.38	15.5	1.028	ON	0.14	1.2	1.234
169	**WCDMA II**	**RMC12.2K**	**Curved surface of Edge 1**	**0cm**	**9538**	**1907.6**	**15.38**	**15.5**	**1.028**	**ON**	**-0.1**	**1.22**	**1.254**

<LTE General Note>

1. Per KDB 941225 D05v02, when reported SAR of 1RB and 50%RB allocation for QPSK ≤ 0.8 W/kg, and 100%RB with QPSK output power is less than 1RB and 50%RB, 100%RB allocation for QPSK is not required.
2. 16QAM output power for each RB allocation configuration is not > ½ dB higher than the same configuration in QPSK and the *reported* SAR for the QPSK configuration is ≤ 1.45 W/kg; Per KDB 941225 D05v02, 16QAM SAR testing is not required.
3. Smaller bandwidth output power for each RB allocation configuration is not > ½ dB higher than the same configuration in the largest supported bandwidth, and the *reported* SAR for the largest supported bandwidth is ≤ 1.45 W/kg; Per KDB 941225 D05v02, Smaller bandwidth SAR testing is not required.

<LTE SAR>

Plot No.	Band	BW (MHz)	Mode	Test Position	Gap (cm)	Ch.	Freq. (MHz)	Average Power (dBm)	Tune-up Limit (dBm)	Tune-up Scaling Factor	Power Back-off	Power Drift (dB)	SAR_{1g} (W/kg)	Tune-up Scaled 1g SAR
86	LTE Band 17	10M	QPSK 1RB 0offset	Bottom Face	1.4cm	23780	709	22.35	23.5	1.303	OFF	-0.02	0.195	0.254
87	LTE Band 17	10M	QPSK 25RB 0offset	Bottom Face	1.4cm	23780	709	21.87	22	1.030	OFF	0.06	0.174	0.179
88	LTE Band 17	10M	QPSK 1RB 0offset	Edge 1	1.1cm	23780	709	22.35	23.5	1.303	OFF	-0.11	0.137	0.179
89	LTE Band 17	10M	QPSK 25RB 0offset	Edge 1	1.1cm	23780	709	21.87	22	1.030	OFF	-0.01	0.113	0.116
90	LTE Band 17	10M	QPSK 1RB 0offset	Edge 2	0cm	23780	709	22.35	23.5	1.303	OFF	0.17	0.117	0.152
91	LTE Band 17	10M	QPSK 25RB 0offset	Edge 2	0cm	23780	709	21.87	22	1.030	OFF	-0.04	0.103	0.106
92	LTE Band 17	10M	QPSK 1RB 24offset	Bottom Face	0cm	23780	709	17.82	18.5	1.169	ON	-0.05	0.451	0.527
93	LTE Band 17	10M	QPSK 25RB 0offset	Bottom Face	0cm	23780	709	16.92	17.5	1.143	ON	0.09	0.293	0.335
94	LTE Band 17	10M	QPSK 1RB 24offset	Edge 1	0cm	23780	709	17.82	18.5	1.169	ON	0.02	0.444	0.519
95	LTE Band 17	10M	QPSK 25RB 0offset	Edge 1	0cm	23780	709	16.92	17.5	1.143	ON	-0.1	0.282	0.322
119	**LTE Band 17**	**10M**	**QPSK 1RB 24offset**	**Curved surface of Edge 1**	**0cm**	**23780**	**709**	**17.82**	**18.5**	**1.169**	**ON**	**-0.03**	**0.474**	**0.554**
84	LTE Band 5	10M	QPSK 1RB 0offset	Bottom Face	1.4cm	20450	829	23.19	23.5	1.074	OFF	0.02	0.248	0.266
85	LTE Band 5	10M	QPSK 25RB 0offset	Bottom Face	1.4cm	20450	829	22.25	22.5	1.059	OFF	-0.05	0.231	0.245
80	LTE Band 5	10M	QPSK 1RB 0offset	Edge1	1.1cm	20450	829	23.19	23.5	1.074	OFF	-0.01	0.194	0.208
81	LTE Band 5	10M	QPSK 25RB 0offset	Edge1	1.1cm	20450	829	22.25	22.5	1.059	OFF	-0.02	0.174	0.184
82	LTE Band 5	10M	QPSK 1RB 0offset	Edge2	0cm	20450	829	23.19	23.5	1.074	OFF	-0.15	0.175	0.188
83	LTE Band 5	10M	QPSK 25RB 0offset	Edge2	0cm	20450	829	22.25	22.5	1.059	OFF	-0.19	0.166	0.176
78	LTE Band 5	10M	QPSK 1RB 0offset	Bottom Face	0cm	20450	829	18.39	18.5	1.026	ON	0	0.447	0.458
79	LTE Band 5	10M	QPSK 25RB 0offset	Bottom Face	0cm	20600	844	17.49	18	1.125	ON	-0.01	0.456	0.513
76	LTE Band 5	10M	QPSK 1RB 0offset	Edge1	0cm	20450	829	18.39	18.5	1.026	ON	-0.09	0.183	0.188
77	LTE Band 5	10M	QPSK 25RB 0offset	Edge1	0cm	20600	844	17.49	18	1.125	ON	-0.08	0.228	0.256
118	**LTE Band 5**	**10M**	**QPSK 1RB 0offset**	**Curved surface of Edge 1**	**0cm**	**20450**	**829**	**18.39**	**18.5**	**1.026**	**ON**	**-0.14**	**0.6**	**0.615**

Plot No.	Band	BW (MHz)	Mode	Test Position	Gap (cm)	Ch.	Freq. (MHz)	Average Power (dBm)	Tune-up Limit (dBm)	Tune-up Scaling Factor	Power Back-off	Power Drift (dB)	SAR_{1g} (W/kg)	Tune-up Scaled 1g SAR
148	LTE Band 4	10M	QPSK 1RB 49offset	Bottom Face	1.4cm	20175	1732.5	21.96	23	1.271	OFF	0.01	0.327	0.415
149	LTE Band 4	10M	QPSK 25RB 24offset	Bottom Face	1.4cm	20000	1715	21.23	22	1.194	OFF	0.04	0.294	0.351
139	LTE Band 4	10M	QPSK 1RB 49offset	Edge1	1.1cm	20175	1732.5	21.96	23	1.271	OFF	0.13	1.02	1.296
140	LTE Band 4	10M	QPSK 1RB 49offset	Edge1	1.1cm	20000	1715	21.87	23	1.297	OFF	-0.09	0.946	1.227
141	LTE Band 4	10M	QPSK 1RB 49offset	Edge1	1.1cm	20350	1750	21.86	23	1.300	OFF	-0.02	1.01	1.313
142	LTE Band 4	10M	QPSK 25RB 24offset	Edge1	1.1cm	20000	1715	21.23	22	1.194	OFF	-0.02	0.785	0.937
143	LTE Band 4	10M	QPSK 25RB 24offset	Edge1	1.1cm	20175	1732.5	21.16	22	1.213	OFF	-0.05	0.826	1.002
144	LTE Band 4	10M	QPSK 25RB 24offset	Edge1	1.1cm	20350	1750	21.05	22	1.245	OFF	-0.067	1.05	1.307
145	LTE Band 4	10M	QPSK 50RB 0offset	Edge1	1.1cm	20000	1715	21.28	22	1.180	OFF	-0.07	0.831	0.981
146	LTE Band 4	10M	QPSK 1RB 49offset	Edge2	0cm	20175	1732.5	21.96	23	1.271	OFF	-0.043	0.177	0.225
147	LTE Band 4	10M	QPSK 25RB 24offset	Edge2	0cm	20000	1715	21.23	22	1.194	OFF	-0.023	0.118	0.141
157	LTE Band 4	10M	QPSK 1RB 49offset	Bottom Face	0cm	20350	1750	14.89	15	1.026	ON	-0.08	0.56	0.574
158	LTE Band 4	10M	QPSK 25RB 0offset	Bottom Face	0cm	20350	1750	13.89	14	1.026	ON	0.08	0.581	0.596
150	LTE Band 4	10M	QPSK 1RB 49offset	Edge1	0cm	20350	1750	14.89	15	1.026	ON	-0.04	1.11	1.138
151	LTE Band 4	10M	QPSK 1RB 49offset	Edge1	0cm	20000	1715	14.7	15	1.072	ON	-0.1	1.24	1.329
152	LTE Band 4	10M	QPSK 1RB 49offset	Edge1	0cm	20175	1732.5	14.6	15	1.096	ON	0.03	1.07	1.173
153	LTE Band 4	10M	QPSK 25RB 0offset	Edge1	0cm	20350	1750	13.89	14	1.026	ON	0	1.07	1.097
154	LTE Band 4	10M	QPSK 25RB 0offset	Edge1	0cm	20000	1715	13.73	14	1.064	ON	0.09	0.972	1.034
155	LTE Band 4	10M	QPSK 25RB 0offset	Edge1	0cm	20175	1732.5	13.84	14	1.038	ON	-0.12	0.893	0.927
156	LTE Band 4	10M	QPSK 50RB 0offset	Edge1	0cm	20350	1750	13.82	14	1.042	ON	0.05	1.07	1.115
159	**LTE Band 4**	**10M**	**QPSK 1RB 49offset**	**Curved surface of Edge 1**	**0cm**	**20350**	**1750**	**14.89**	**15**	**1.026**	**ON**	**0.08**	**1.31**	**1.344**
170	LTE Band 4	10M	QPSK 1RB 49offset	Curved surface of Edge 1	0cm	20350	1750	14.89	15	1.026	ON	0.02	1.27	1.303
160	LTE Band 4	10M	QPSK 1RB 49offset	Curved surface of Edge 1	0cm	20000	1715	14.7	15	1.072	ON	0.026	1.3	1.393
171	LTE Band 4	10M	QPSK 1RB 49offset	Curved surface of Edge 1	0cm	20175	1732.5	14.6	15	1.096	ON	-0.05	1.27	1.393

Plot No.	Band	BW (MHz)	Mode	Test Position	Gap (cm)	Ch.	Freq. (MHz)	Average Power (dBm)	Tune-up Limit (dBm)	Tune-up Scaling Factor	Power Back-off	Power Drift (dB)	SAR_{1g} (W/kg)	Tune-up Scaled 1g SAR
54	LTE Band 2	10M	QPSK 1RB 24offset	Bottom Face	1.4cm	18900	1880	22.88	23	1.028	OFF	0	0.538	0.553
55	LTE Band 2	10M	QPSK 25RB 12offset	Bottom Face	1.4cm	18900	1880	21.91	22	1.021	OFF	0.07	0.439	0.448
45	LTE Band 2	10M	QPSK 1RB 24offset	Edge 1	1.1cm	18900	1880	22.88	23	1.028	OFF	-0.02	0.757	0.778
48	LTE Band 2	10M	QPSK 25RB 12offset	Edge 1	1.1cm	18900	1880	21.91	22	1.021	OFF	-0.01	0.675	0.689
52	LTE Band 2	10M	QPSK 1RB 24offset	Edge 2	0cm	18900	1880	22.88	23	1.028	OFF	-0.08	0.281	0.289
53	LTE Band 2	10M	QPSK 25RB 12offset	Edge 2	0cm	18900	1880	21.91	22	1.021	OFF	-0.02	0.226	0.231
36	LTE Band 2	10M	QPSK 1RB 24offset	Bottom Face	0cm	18900	1880	15.99	16	1.002	ON	0.02	0.672	0.674
37	LTE Band 2	10M	QPSK 25RB 12offset	Bottom Face	0cm	18900	1880	14.86	15	1.033	ON	0	0.519	0.536
38	LTE Band 2	10M	QPSK 1RB 24offset	Edge 1	0cm	18900	1880	15.99	16	1.002	ON	-0.01	0.933	0.935
39	LTE Band 2	10M	QPSK 1RB 24offset	Edge 1	0cm	18650	1855	15.89	16	1.026	ON	-0.01	0.86	0.882
40	LTE Band 2	10M	QPSK 1RB 24offset	Edge 1	0cm	19150	1905	15.76	16	1.057	ON	-0.01	0.953	1.007
41	LTE Band 2	10M	QPSK 25RB 12offset	Edge 1	0cm	18900	1880	14.86	15	1.033	ON	0	0.763	0.788
44	LTE Band 2	10M	QPSK 50RB 0offset	Edge 1	0cm	18900	1880	14.76	15	1.057	ON	-0.04	0.742	0.784
112	LTE Band 2	10M	QPSK 1RB 24offset	Curved surface of Edge 1	0cm	18900	1880	15.99	16	1.002	ON	-0.14	1.13	1.133
113	LTE Band 2	10M	QPSK 1RB 24offset	Curved surface of Edge 1	0cm	18650	1855	15.89	16	1.026	ON	-0.03	1.06	1.087
114	**LTE Band 2**	**10M**	**QPSK 1RB 24offset**	**Curved surface of Edge 1**	**0cm**	**19150**	**1905**	**15.76**	**16**	**1.057**	**ON**	**0.02**	**1.21**	**1.279**
172	LTE Band 2	10M	QPSK 1RB 24offset	Curved surface of Edge 1	0cm	19150	1905	15.76	16	1.057	ON	-0.02	1.19	1.258

<WLAN>

Plot No.	Band	Mode	Data rate	Test Position	Gap (cm)	Ch.	Freq. (MHz)	Average Power (dBm)	Tune-up Limit (dBm)	Tune-up Scaling Factor	Power Drift (dB)	SAR_{1g} (W/kg)	Tune-up Scaled 1g SAR
122	WLAN2.4G	802.11b	1M	Bottom Face	0cm	11	2462	12.92	13	1.019	-0.17	1.08	1.100
123	**WLAN2.4G**	**802.11b**	**1M**	**Bottom Face**	**0cm**	**11**	**2462**	**12.92**	**13**	**1.019**	**0.16**	**1.09**	**1.110**
120	WLAN2.4G	802.11b	1M	Bottom Face	0cm	1	2412	12.88	13	1.028	0.09	0.874	0.898
121	WLAN2.4G	802.11b	1M	Bottom Face	0cm	6	2437	12.82	13	1.042	0.164	0.876	0.913
124	WLAN2.4G	802.11b	1M	Edge1	0cm	11	2462	12.92	13	1.019	-0.15	0.151	0.154
125	WLAN2.4G	802.11b	1M	Curved surface of Edge 1	0cm	11	2462	12.92	13	1.019	0.125	0.176	0.179

11.2 Repeated SAR Measurement

Plot No.	Band	Mode	Test Position	Gap (cm)	Ch.	Freq. (MHz)	Average Power (dBm)	Tune-up Limit (dBm)	Tune-up Scaling Factor	Power Back-off	Power Drift (dB)	SAR_{1g} (W/kg)	Tune-up Scaled 1g SAR
127	GSM850	GPRS (2 Tx slots)	Bottom Face	0cm	128	824.2	27.46	28	1.132	ON	0.11	0.961	1.088
165	GSM850	GPRS (2 Tx slots)	Bottom Face	0cm	128	824.2	27.46	28	1.132	ON	-0.01	0.997	1.129
102	GSM1900	GPRS (2 Tx slots)	Edge 1	0cm	661	1880	20.96	21.5	1.132	ON	-0.025	0.909	1.029
166	GSM1900	GPRS (2 Tx slots)	Edge 1	0cm	661	1880	20.96	21.5	1.132	ON	-0.18	0.85	0.963
130	WCDMA V	RMC12.2K	Bottom Face	0cm	4132	826.4	19.65	20	1.084	ON	-0.18	0.976	1.058
167	WCDMA V	RMC12.2K	Bottom Face	0cm	4132	826.4	19.65	20	1.084	ON	-0.07	0.972	1.054
27	WCDMA IV	RMC12.2K	Edge 1	1.1cm	1513	1752.6	22.24	23	1.191	OFF	-0.026	1.09	1.298
168	WCDMA IV	RMC12.2K	Edge 1	1.1cm	1513	1752.6	22.24	23	1.191	OFF	-0.17	1.07	1.275
111	WCDMA II	RMC12.2K	Edge 1	0cm	9538	1907.6	15.38	15.5	1.028	ON	0.14	1.2	1.234
169	WCDMA II	RMC12.2K	Edge 1	0cm	9538	1907.6	15.38	15.5	1.028	ON	-0.1	1.22	1.254
159	LTE Band 4	QPSK 1RB 49 offset	Edge1	0cm	20350	1750	14.89	15	1.026	ON	0.08	1.31	1.344
170	LTE Band 4	QPSK 1RB 49 offset	Edge1	0cm	20350	1750	14.89	15	1.026	ON	0.02	1.27	1.303
114	LTE Band 2	QPSK 1RB 24 offset	Edge 1	0cm	19150	1905	15.76	16	1.057	ON	0.02	1.21	1.279
172	LTE Band 2	QPSK 1RB 24 offset	Edge 1	0cm	19150	1905	15.76	16	1.057	ON	-0.02	1.19	1.258
122	WLAN2.4G	802.11b	Bottom Face	0cm	11	2462	12.92	13	1.019	-	-0.17	1.08	1.100
173	WLAN2.4G	802.11b	Bottom Face	0cm	11	2462	12.92	13	1.019	-	0.16	1.09	1.110

Note:

1. Per KDB 865664 D01v01, for each frequency band, repeated SAR measurement is required only when the measured SAR is ≥ 0.8 W/kg
2. Per KDB 865664 D01v01, if the deviation among the repeated measurement is ≤ 20% and the measured SAR < 1.45 W/kg, only one repeated measurement is required.
3. The deviation is the difference in percentage between original and repeated *measured SAR*.
4. All measurement SAR result is scaled-up to account for tune-up tolerance and is compliant.

11.3 Highest SAR Plot

Plot No.	Band	Mode	Test Position	Gap (cm)	Ch.	Freq. (MHz)	Average Power (dBm)	Tune-up Limit (dBm)	Tune-up Scaling Factor	Power Back-off	Power Drift (dB)	SAR_{1g} (W/kg)	Tune-up Scaled 1g SAR
165	GSM850	GPRS (2 Tx slots)	Bottom Face	0cm	128	824.2	27.46	28	1.132	ON	-0.01	0.997	1.129
102	GSM1900	GPRS (2 Tx slots)	Edge 1	0cm	661	1880	20.96	21.5	1.132	ON	-0.025	0.909	1.029
130	WCDMA V	RMC12.2K	Bottom Face	0cm	4132	826.4	19.65	20	1.084	ON	-0.18	0.976	1.058
27	WCDMA IV	RMC12.2K	Edge 1	1.1cm	1513	1752.6	22.24	23	1.191	OFF	-0.026	1.09	1.298
169	WCDMA II	RMC12.2K	Edge 1	0cm	9538	1907.6	15.38	15.5	1.028	ON	-0.1	1.22	1.254
159	LTE Band 4	QPSK 1RB 49offset	Edge1	0cm	20350	1750	14.89	15	1.026	ON	0.08	1.31	1.344
114	LTE Band 2	QPSK 1RB 24offset	Edge 1	0cm	19150	1905	15.76	16	1.057	ON	0.02	1.21	1.279
173	WLAN2.4G	802.11b	Bottom Face	0cm	11	2462	12.92	13	1.019	N/A	0.16	1.09	1.110

Test Laboratory: Sporton International Inc. SAR/HAC Testing Lab Date: 2012/11/21

#165_GSM850_GPRS (2 Tx slots)_Bottom Face_0cm_Ch128_Repeat

DUT: 2O2430

Communication System: GSM850; Frequency: 824.2 MHz;Duty Cycle: 1:4
Medium: MSL_850_121121 Medium parameters used: f = 824.2 MHz; σ = 0.958 mho/m; ε_r = 54.706; ρ = 1000 kg/m^3
Ambient Temperature：22.8 ℃; Liquid Temperature：21.8 ℃

DASY5 Configuration:
- Probe: ET3DV6 - SN1787; ConvF(6.08, 6.08, 6.08); Calibrated: 2012/5/29;
- Sensor-Surface: 4mm (Mechanical Surface Detection)
- Electronics: DAE3 Sn495; Calibrated: 2012/4/23
- Phantom: ELI v4.0; Type: QDOVA001BB; Serial: TP:1127
- Measurement SW: DASY52, Version 52.8 (3); SEMCAD X Version 14.6.7 (6848)

Configuration/Ch128/Area Scan (61x191x1): Measurement grid: dx=15 mm, dy=15 mm
Maximum value of SAR (interpolated) = 1.01 W/kg

Configuration/Ch128/Zoom Scan (5x5x7)/Cube 0: Measurement grid: dx=8mm, dy=8mm, dz=5mm
Reference Value = 35.133 V/m; Power Drift = -0.01 dB
Peak SAR (extrapolated) = 1.69 W/kg
SAR(1 g) = 0.997 W/kg; SAR(10 g) = 0.551 W/kg
Maximum value of SAR (measured) = 1.09 W/kg

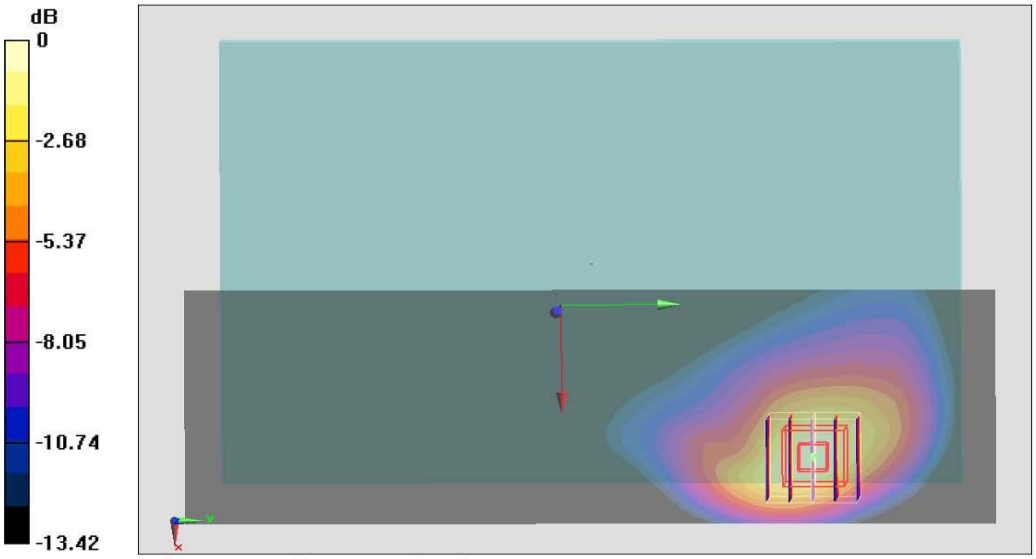

0 dB = 1.09 W/kg = 0.37 dBW/kg

Test Laboratory: Sporton International Inc. SAR/HAC Testing Lab Date: 2012/11/23

#102_GSM1900_GPRS (2 Tx slots)_Edge 1_0cm_Ch661_Curve SAR

DUT: 2O2430

Communication System: PCS; Frequency: 1880 MHz;Duty Cycle: 1:4
Medium: MSL_1900_121123 Medium parameters used: f = 1880 MHz; σ = 1.516 mho/m; ε_r = 54.557; ρ = 1000 kg/m^3
Ambient Temperature：22.2 ℃； Liquid Temperature：21.2 ℃

DASY5 Configuration:
- Probe: ET3DV6 - SN1787; ConvF(4.58, 4.58, 4.58); Calibrated: 2012/5/29;
- Sensor-Surface: 4mm (Mechanical Surface Detection)
- Electronics: DAE3 Sn495; Calibrated: 2012/4/23
- Phantom: ELI v5.0 Left; Type: QDOVA002AA; Serial: TP:1131
- Measurement SW: DASY52, Version 52.8 (3); SEMCAD X Version 14.6.7 (6848)

Configuration/Ch661/Area Scan (41x101x1): Measurement grid: dx=15 mm, dy=15 mm
Maximum value of SAR (interpolated) = 1.13 W/kg

Configuration/Ch661/Zoom Scan (5x5x7)/Cube 0: Measurement grid: dx=8mm, dy=8mm, dz=5mm
Reference Value = 29.663 V/m; Power Drift = -0.025 dB
Peak SAR (extrapolated) = 1.67 W/kg
SAR(1 g) = 0.909 W/kg; SAR(10 g) = 0.428 W/kg
Maximum value of SAR (measured) = 1.08 W/kg

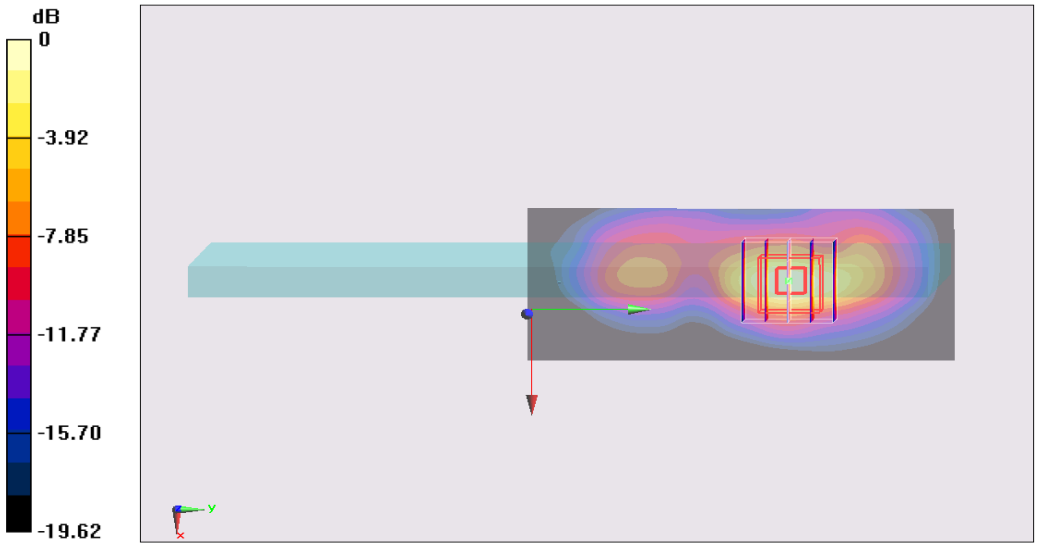

0 dB = 1.08 W/kg = 0.33 dBW/kg

Test Laboratory: Sporton International Inc. SAR/HAC Testing Lab Date: 2012/11/21

#130_WCDMA V_RMC12.2K_Bottom Face_0cm_Ch4132

DUT: 2O2430

Communication System: WCDMA; Frequency: 826.4 MHz;Duty Cycle: 1:1
Medium: MSL_850_121121 Medium parameters used: f = 826.4 MHz; σ = 0.96 mho/m; ε_r = 54.684; ρ = 1000 kg/m^3
Ambient Temperature：22.8 ℃; Liquid Temperature：21.8 ℃

DASY5 Configuration:
- Probe: ET3DV6 - SN1787; ConvF(6.08, 6.08, 6.08); Calibrated: 2012/5/29;
- Sensor-Surface: 4mm (Mechanical Surface Detection)
- Electronics: DAE3 Sn495; Calibrated: 2012/4/23
- Phantom: ELI v4.0; Type: QDOVA001BB; Serial: TP:1127
- Measurement SW: DASY52, Version 52.8 (3); SEMCAD X Version 14.6.7 (6848)

Configuration/Ch4132/Area Scan (61x191x1): Measurement grid: dx=15 mm, dy=15 mm
Maximum value of SAR (interpolated) = 1.03 W/kg

Configuration/Ch4132/Zoom Scan (5x5x7)/Cube 0: Measurement grid: dx=8mm, dy=8mm, dz=5mm
Reference Value = 34.969 V/m; Power Drift = -0.18 dB
Peak SAR (extrapolated) = 1.68 W/kg
SAR(1 g) = 0.976 W/kg; SAR(10 g) = 0.549 W/kg
Maximum value of SAR (measured) = 1.04 W/kg

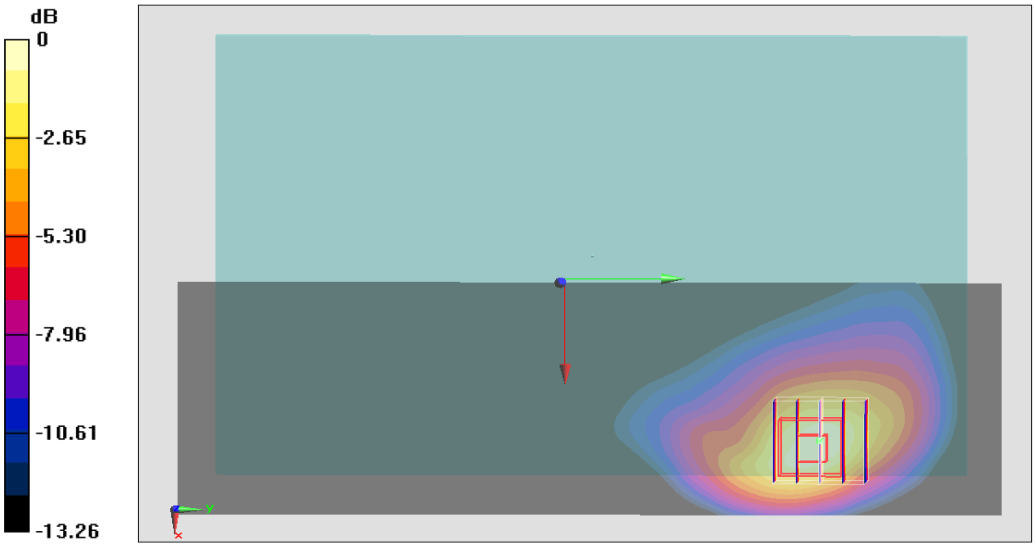

0 dB = 1.04 W/kg = 0.17 dBW/kg

Test Laboratory: Sporton International Inc. SAR/HAC Testing Lab Date: 2012/11/24

#27_WCDMA IV_RMC12.2K_Edge 1_1.1cm_Ch1513

DUT: 2O2430

Communication System: WCDMA; Frequency: 1752.6 MHz;Duty Cycle: 1:1
Medium: MSL_1750_121124 Medium parameters used: f = 1753 MHz; σ = 1.512 mho/m; ε_r = 52.406; ρ = 1000 kg/m^3
Ambient Temperature：22.6 ℃; Liquid Temperature：21.6 ℃

DASY5 Configuration:
- Probe: ET3DV6 - SN1787; ConvF(4.81, 4.81, 4.81); Calibrated: 2012/5/29;
- Sensor-Surface: 4mm (Mechanical Surface Detection)
- Electronics: DAE3 Sn495; Calibrated: 2012/4/23
- Phantom: ELI v5.0 Left; Type: QDOVA002AA; Serial: TP:1131
- Measurement SW: DASY52, Version 52.8 (3); SEMCAD X Version 14.6.7 (6848)

Configuration/Ch1513/Area Scan (41x101x1): Measurement grid: dx=15 mm, dy=15 mm
Maximum value of SAR (interpolated) = 1.26 W/kg

Configuration/Ch1513/Zoom Scan (5x5x7)/Cube 0: Measurement grid: dx=8mm, dy=8mm, dz=5mm
Reference Value = 31.452 V/m; Power Drift = -0.026 dB
Peak SAR (extrapolated) = 1.57 W/kg
SAR(1 g) = 1.09 W/kg; SAR(10 g) = 0.630 W/kg
Maximum value of SAR (measured) = 1.21 W/kg

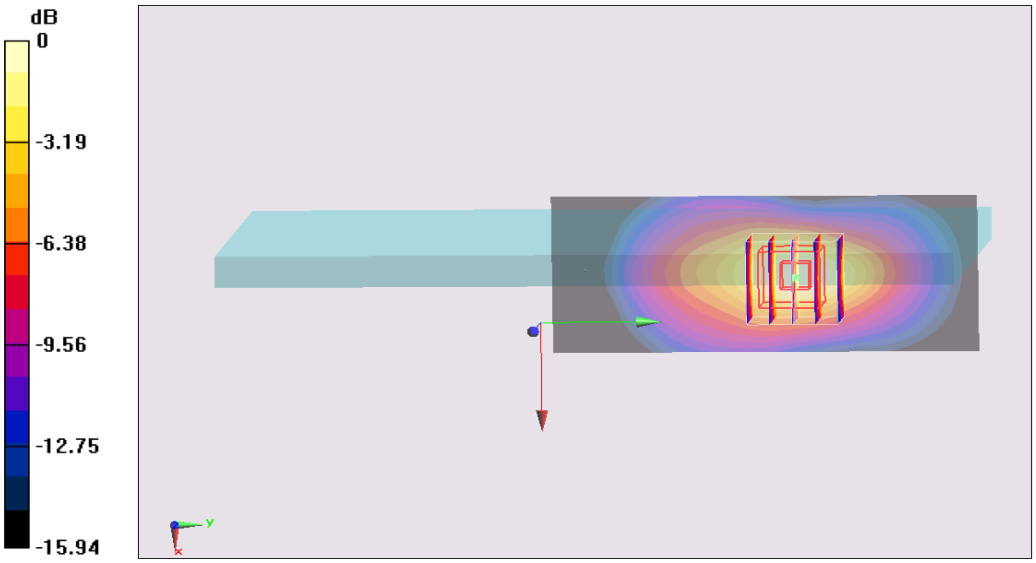

0 dB = 1.21 W/kg = 0.83 dBW/kg

Test Laboratory: Sporton International Inc. SAR/HAC Testing Lab Date: 2012/11/23

#169_WCDMA II_RMC12.2K_Edge 1_0cm_Ch9538_Curve SAR_Repeat

DUT: 2O2430

Communication System: WCDMA; Frequency: 1907.6 MHz;Duty Cycle: 1:1
Medium: MSL_1900_121123 Medium parameters used: f = 1908 MHz; σ = 1.55 mho/m; ε_r = 54.424; ρ = 1000 kg/m^3
Ambient Temperature：22.2 ℃; Liquid Temperature：21.2 ℃

DASY5 Configuration:
- Probe: ET3DV6 - SN1787; ConvF(4.58, 4.58, 4.58); Calibrated: 2012/5/29;
- Sensor-Surface: 4mm (Mechanical Surface Detection)
- Electronics: DAE3 Sn495; Calibrated: 2012/4/23
- Phantom: ELI v5.0 Left; Type: QDOVA002AA; Serial: TP:1131
- Measurement SW: DASY52, Version 52.8 (3); SEMCAD X Version 14.6.7 (6848)

Configuration/Ch9538/Area Scan (41x101x1): Measurement grid: dx=15 mm, dy=15 mm
Maximum value of SAR (interpolated) = 1.40 W/kg

Configuration/Ch9538/Zoom Scan (5x5x7)/Cube 0: Measurement grid: dx=8mm, dy=8mm, dz=5mm
Reference Value = 32.678 V/m; Power Drift = -0.10 dB
Peak SAR (extrapolated) = 2.46 W/kg
SAR(1 g) = 1.22 W/kg; SAR(10 g) = 0.481 W/kg
Maximum value of SAR (measured) = 1.48 W/kg

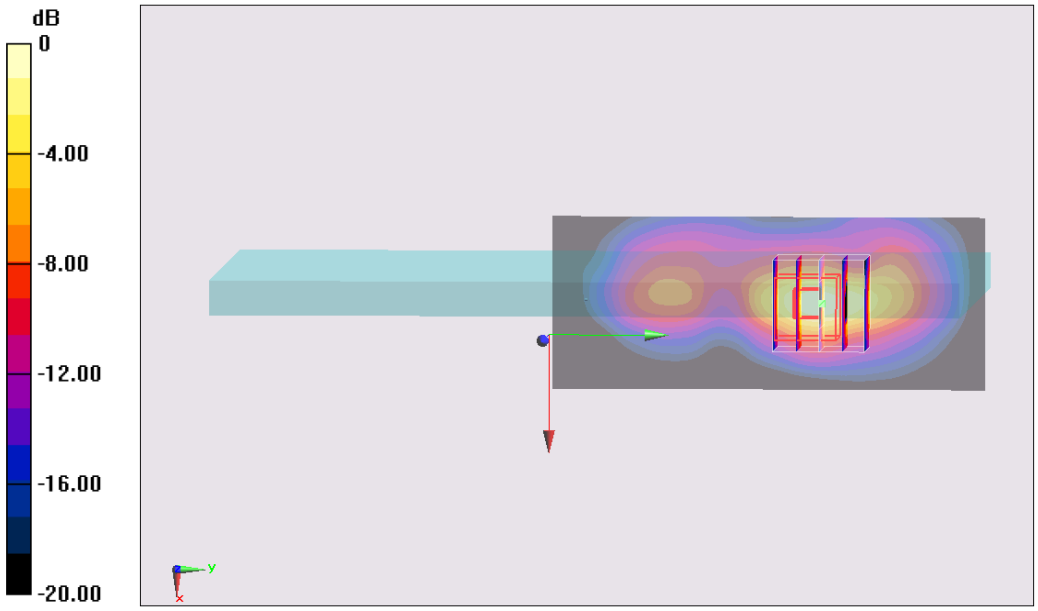

0 dB = 1.48 W/kg = 1.70 dBW/kg

Test Laboratory: Sporton International Inc. SAR/HAC Testing Lab Date: 2012/11/20

#159_LTE Band 4_10M_QPSK 1RB 49offset_Edge1_0cm_Ch20350_Curve SAR

DUT: 2O2430

Communication System: LTE; Frequency: 1750 MHz;Duty Cycle: 1:1
Medium: MSL_1750_121120 Medium parameters used: f = 1750 MHz; σ = 1.515 mho/m; ε_r = 52.41; ρ = 1000 kg/m^3
Ambient Temperature：22.6 ℃; Liquid Temperature：21.6 ℃

DASY5 Configuration:
- Probe: ES3DV3 - SN3270; ConvF(4.98, 4.98, 4.98); Calibrated: 2012/9/28;
- Sensor-Surface: 2mm (Mechanical Surface Detection)
- Electronics: DAE4 Sn778; Calibrated: 2012/8/27
- Phantom: ELI 4.0_Front; Type: QDOVA001BB; Serial: 1026
- Measurement SW: DASY52, Version 52.8 (2); SEMCAD X Version 14.6.6 (6477)

Configuration/Ch20350/Area Scan (41x191x1): Measurement grid: dx=15 mm, dy=15 mm
Maximum value of SAR (interpolated) = 2.03 W/kg

Configuration/Ch20350/Zoom Scan (5x5x7)/Cube 0: Measurement grid: dx=8mm, dy=8mm, dz=5mm
Reference Value = 35.150 V/m; Power Drift = 0.08 dB
Peak SAR (extrapolated) = 3.13 W/kg
SAR(1 g) = 1.31 W/kg; SAR(10 g) = 0.564 W/kg
Maximum value of SAR (measured) = 1.80 W/kg

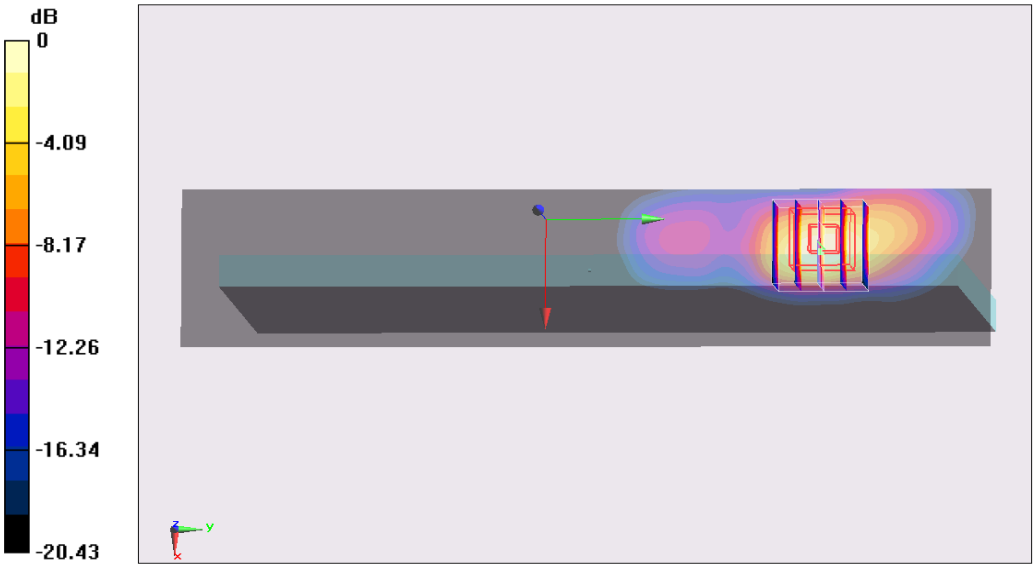

0 dB = 1.80 W/kg = 2.55 dBW/kg

Test Laboratory: Sporton International Inc. SAR/HAC Testing Lab Date: 2012/11/23

#114_LTE Band 2_10M_QPSK 1RB 24offset_Edge 1_0cm_Ch19150_Curve SAR

DUT: 2O2430

Communication System: LTE; Frequency: 1905 MHz;Duty Cycle: 1:1
Medium: MSL_1900_121123 Medium parameters used: f = 1905 MHz; σ = 1.546 mho/m; ε_r = 54.438; ρ = 1000 kg/m^3
Ambient Temperature：22.2 ℃； Liquid Temperature：21.2 ℃

DASY5 Configuration:
- Probe: ET3DV6 - SN1787; ConvF(4.58, 4.58, 4.58); Calibrated: 2012/5/29;
- Sensor-Surface: 4mm (Mechanical Surface Detection)
- Electronics: DAE3 Sn495; Calibrated: 2012/4/23
- Phantom: ELI v5.0 Left; Type: QDOVA002AA; Serial: TP:1131
- Measurement SW: DASY52, Version 52.8 (3); SEMCAD X Version 14.6.7 (6848)

Configuration/Ch19150/Area Scan (41x101x1): Measurement grid: dx=15 mm, dy=15 mm
Maximum value of SAR (interpolated) = 1.44 W/kg

Configuration/Ch19150/Zoom Scan (5x5x7)/Cube 0: Measurement grid: dx=8mm, dy=8mm, dz=5mm
Reference Value = 33.308 V/m; Power Drift = 0.02 dB
Peak SAR (extrapolated) = 2.29 W/kg
SAR(1 g) = 1.21 W/kg; SAR(10 g) = 0.559 W/kg
Maximum value of SAR (measured) = 1.46 W/kg

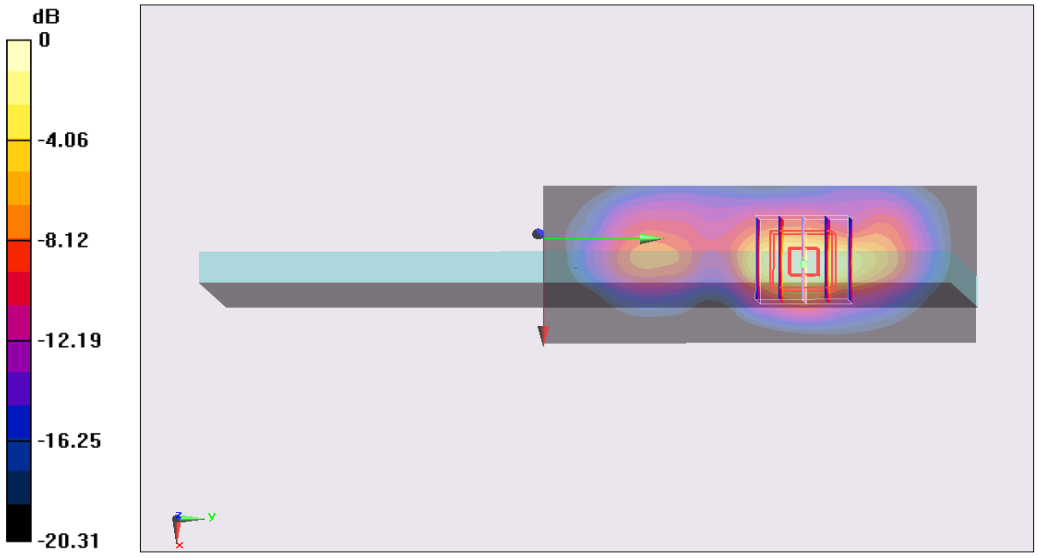

0 dB = 1.46 W/kg = 1.64 dBW/kg

Test Laboratory: Sporton International Inc. SAR/HAC Testing Lab Date: 2012/11/24

#173_WLAN2.4G_802.11b_Bottom Face_0cm_Ch11_Repeat

DUT: 2O2430

Communication System: 802.11b; Frequency: 2462 MHz;Duty Cycle: 1:1
Medium: MSL_2450_121124 Medium parameters used: f = 2462 MHz; σ = 2.036 mho/m; ε_r = 52.253; ρ = 1000 kg/m^3
Ambient Temperature：22.7 ℃; Liquid Temperature：21.5 ℃

DASY5 Configuration:
- Probe: EX3DV4 - SN3792; ConvF(7.1, 7.1, 7.1); Calibrated: 2012/6/21;
- Sensor-Surface: 2mm (Mechanical Surface Detection)
- Electronics: DAE4 Sn1338; Calibrated: 2012/6/12
- Phantom: ELI 4.0_Front; Type: QDOVA001BB; Serial: 1026
- Measurement SW: DASY52, Version 52.8 (3);SEMCAD X Version 14.6.7 (6848)

Configuration/Ch11/Area Scan (81x121x1): Measurement grid: dx=12 mm, dy=12 mm
Maximum value of SAR (interpolated) = 1.78 W/kg

Configuration/Ch11/Zoom Scan (7x7x7)/Cube 0: Measurement grid: dx=5mm, dy=5mm, dz=5mm
Reference Value = 13.377 V/m; Power Drift = 0.160 dB
Peak SAR (extrapolated) = 2.69 W/kg
SAR(1 g) = 1.09 W/kg; SAR(10 g) = 0.459 W/kg
Maximum value of SAR (measured) = 1.83 W/kg

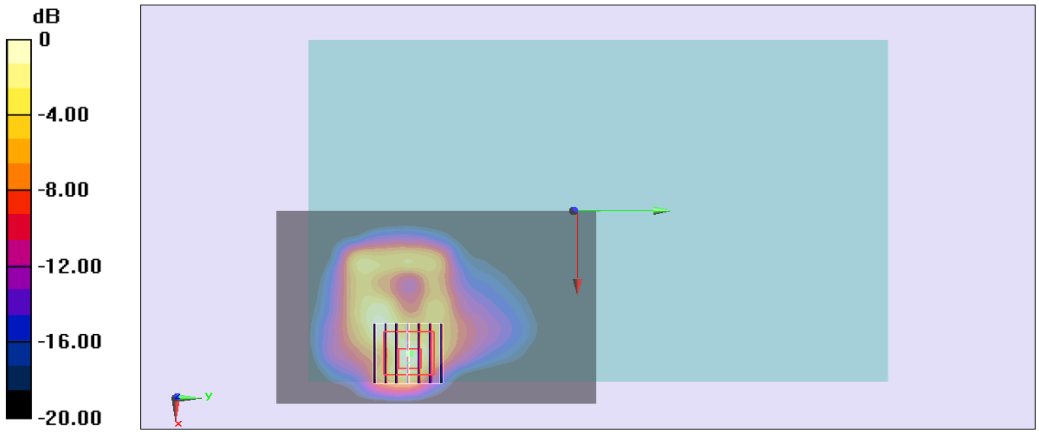

0 dB = 1.83 W/kg = 2.62 dBW/kg

11.4 Simultaneous Transmission SAR Analysis and Measurements

No.	Applicable Simultaneous Transmission Combination
1.	WWAN (data) + BT
2.	WWAN (data) + WLAN 2.4GHz (router)

Note:

1. WLAN and Bluetooth share the same antenna, and cannot transmit simultaneously.
2. For simultaneous transmission analysis, Bluetooth SAR is estimated per KDB 447498 D01v05 based on the formula below.
   - (*max. power of channel, including tune-up tolerance, mW*)/(*min. test separation distance, mm*)]·[√f(GHz)/*x*] W/kg for *test separation distances* ≤ 50 mm; where *x* = 7.5 for 1-g SAR, and *x* = 18.75 for 10-g SAR.
   - 0.4 W/kg for 1-g SAR and 1.0 W/kg for 10-g SAR, when the *test separation distances* is > 50 mm.
3. If the test separation distance (antenna-user) is < 5mm, 5mm is used for estimated SAR calculation
4. Bluetooth maximum RF power is 7.5dBm, and the estimated SAR is listed below.

	Bottom Face 0cm gap	Bottom Face 1.4cm gap	Edge 1 0cm gap	Edge 1 1.1cm gap	Edge 2 0cm gap	Curved surface of Edge 1
Estimated SAR (W/kg)	0.236 W/kg	0.084 W/kg	0.236 W/kg	0.107 W/kg	0.236 W/kg	0.236 W/kg

Position	WWAN			WLAN		WWAN + WLAN	Note
	WWAN Band	Plot No	Max. WWAN SAR (W/kg)	Plot No	Max. WLAN SAR (W/kg)		
Bottom Face At 1.4 cm	GSM850	12	0.21	122	1.11	**1.32**	
	GSM1900	19	0.358	122	1.11	**1.47**	
	WCDMA V	136	0.31	122	1.11	**1.42**	
	WCDMA IV	24	0.499	122	1.11	**1.61**	1
	WCDMA II	33	0.414	122	1.11	**1.52**	
	LTE Band 17	86	0.254	122	1.11	**1.36**	
	LTE Band 5	84	0.266	122	1.11	**1.38**	
	LTE Band 4	148	0.415	122	1.11	**1.53**	
	LTE Band 2	54	0.553	122	1.11	**1.66**	1
Edge1 At 1.1 cm	GSM850	13	0.167	124	0.154	**0.32**	
	GSM1900	20	0.789	124	0.154	**0.94**	
	WCDMA V	137	0.296	124	0.154	**0.45**	
	WCDMA IV	27	1.298	124	0.154	**1.45**	
	WCDMA II	34	0.705	124	0.154	**0.86**	
	LTE Band 17	88	0.179	124	0.154	**0.33**	
	LTE Band 5	80	0.208	124	0.154	**0.36**	
	LTE Band 4	141	1.313	124	0.154	**1.47**	
	LTE Band 2	45	0.778	124	0.154	**0.93**	
Edge2 At 0cm	GSM850	14	0.072			**0.07**	
	GSM1900	21	0.229			**0.23**	
	WCDMA V	138	0.226			**0.23**	
	WCDMA IV	28	0.179			**0.18**	
	WCDMA II	35	0.209			**0.21**	
	LTE Band 17	90	0.152			**0.15**	
	LTE Band 5	82	0.188			**0.19**	
	LTE Band 4	146	0.225			**0.23**	
	LTE Band 2	52	0.289			**0.29**	
Bottom Face At 0cm	GSM850	127	1.129	122	1.11	**2.24**	1
	GSM1900	15	0.43	122	1.11	**1.54**	
	WCDMA V	130	1.058	122	1.11	**2.17**	1
	WCDMA IV	23	0.481	122	1.11	**1.59**	
	WCDMA II	29	0.656	122	1.11	**1.77**	1
	LTE Band 17	92	0.527	122	1.11	**1.64**	1
	LTE Band 5	79	0.513	122	1.11	**1.62**	1
	LTE Band 4	158	0.596	122	1.11	**1.71**	1
	LTE Band 2	36	0.674	122	1.11	**1.78**	1
Edge1 At 0cm	GSM850	129	0.715	124	0.154	**0.87**	
	GSM1900	16	0.918	124	0.154	**1.07**	
	WCDMA V	133	0.614	124	0.154	**0.77**	
	WCDMA IV	22	0.756	124	0.154	**0.91**	
	WCDMA II	30	0.796	124	0.154	**0.95**	
	LTE Band 17	94	0.519	124	0.154	**0.67**	
	LTE Band 5	77	0.256	124	0.154	**0.41**	
	LTE Band 4	151	1.329	124	0.154	**1.48**	
	LTE Band 2	40	1.007	124	0.154	**1.16**	
Curved surface of Edge 1_ At 0cm	GSM850	135	0.885	122	1.11	**1.06**	
	GSM1900	102	1.029	122	1.11	**1.21**	
	WCDMA V	134	0.841	122	1.11	**1.02**	
	WCDMA IV	106	0.797	122	1.11	**0.98**	
	WCDMA II	111	1.254	122	1.11	**1.43**	
	LTE Band 17	119	0.554	122	1.11	**0.73**	
	LTE Band 5	118	0.615	122	1.11	**0.79**	
	LTE Band 4	160	1.393	122	1.11	**1.57**	
	LTE Band 2	114	1.279	122	1.11	**1.46**	

Position	WWAN Band	Plot No.	Max. WWAN SAR (W/kg)	BT Estimated. SAR (W/kg)	WWAN + WLAN	Note
Bottom Face At 1.4 cm	GSM850	12	0.21	0.084	**0.29**	
	GSM1900	19	0.358	0.084	**0.44**	
	WCDMA V	136	0.31	0.084	**0.39**	
	WCDMA IV	24	0.499	0.084	**0.58**	
	WCDMA II	33	0.414	0.084	**0.50**	
	LTE Band 17	86	0.254	0.084	**0.34**	
	LTE Band 5	84	0.266	0.084	**0.35**	
	LTE Band 4	148	0.415	0.084	**0.50**	
	LTE Band 2	54	0.553	0.084	**0.64**	
Edge1 At 1.1 cm	GSM850	13	0.167	0.107	**0.27**	
	GSM1900	20	0.789	0.107	**0.90**	
	WCDMA V	137	0.296	0.107	**0.40**	
	WCDMA IV	27	1.298	0.107	**1.41**	
	WCDMA II	34	0.705	0.107	**0.81**	
	LTE Band 17	88	0.179	0.107	**0.29**	
	LTE Band 5	80	0.208	0.107	**0.32**	
	LTE Band 4	141	1.313	0.107	**1.42**	
	LTE Band 2	45	0.778	0.107	**0.89**	
Edge2 At 0cm	GSM850	14	0.072	0.236	**0.31**	
	GSM1900	21	0.229	0.236	**0.47**	
	WCDMA V	138	0.226	0.236	**0.46**	
	WCDMA IV	28	0.179	0.236	**0.42**	
	WCDMA II	35	0.209	0.236	**0.45**	
	LTE Band 17	90	0.152	0.236	**0.39**	
	LTE Band 5	82	0.188	0.236	**0.42**	
	LTE Band 4	146	0.225	0.236	**0.46**	
	LTE Band 2	52	0.289	0.236	**0.53**	
Bottom Face At 0cm	GSM850	127	1.129	0.236	**1.37**	
	GSM1900	15	0.43	0.236	**0.67**	
	WCDMA V	130	1.058	0.236	**1.29**	
	WCDMA IV	23	0.481	0.236	**0.72**	
	WCDMA II	29	0.656	0.236	**0.89**	
	LTE Band 17	92	0.527	0.236	**0.76**	
	LTE Band 5	79	0.513	0.236	**0.75**	
	LTE Band 4	158	0.596	0.236	**0.83**	
	LTE Band 2	36	0.674	0.236	**0.91**	
Edge1 At 0cm	GSM850	129	0.715	0.236	**0.95**	
	GSM1900	16	0.918	0.236	**1.15**	
	WCDMA V	133	0.614	0.236	**0.85**	
	WCDMA IV	22	0.756	0.236	**0.99**	
	WCDMA II	30	0.796	0.236	**1.03**	
	LTE Band 17	94	0.519	0.236	**0.76**	
	LTE Band 5	77	0.256	0.236	**0.49**	
	LTE Band 4	151	1.329	0.236	**1.57**	
	LTE Band 2	40	1.007	0.236	**1.24**	
Curved surface of Edge 1_ At 0cm	GSM850	135	0.885	0.236	**1.12**	
	GSM1900	102	1.029	0.236	**1.27**	
	WCDMA V	134	0.841	0.236	**1.08**	
	WCDMA IV	106	0.797	0.236	**1.03**	
	WCDMA II	111	1.254	0.236	**1.49**	
	LTE Band 17	119	0.554	0.236	**0.79**	
	LTE Band 5	118	0.615	0.236	**0.85**	
	LTE Band 4	160	1.393	0.236	**1.63**	**1, 2**
	LTE Band 2	114	1.279	0.236	**1.52**	

Note:

1. 1g-SAR scalar summation ≥1.6 W/kg, SAR peak location separation ratio is analyzed to determine simultaneous SAR testing exclusion, in section 11.4
2. Per KDB 447498 D01v05, to calculate SPLSR, Bluetooth SAR peak location is assumed to be the feed-point or geometric-center of the antenna, whichever is closest to WWAN SAR peak for conservativeness; geometric-center of the antenna is assumed in this filing.

11.5 Simultaneous analysis - SPLSR calculation

Plot No	Band	Position	SAR (W/kg)	Gap (cm)	SAR peak location (m)			3D distance (cm)	Pair SAR sum (W/kg)	SPLSR	Simultaneous SAR
					X	Y	Z				
#24	WCDMA IV	Bottom Face	0.499	1.4	0.0865	0.0775	-0.178	174.2	1.61	0.010	Not required
#122	WLAN 2.4G		1.11	0	0.0558	-0.094	-0.177				

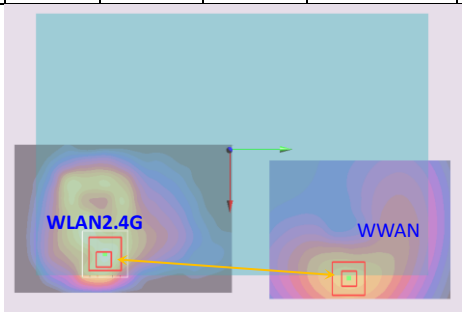

Plot No	Band	Position	SAR (W/kg)	Gap (cm)	SAR peak location (m)			3D distance (cm)	Pair SAR sum (W/kg)	SPLSR	Simultaneous SAR
					X	Y	Z				
#54	LTE Band 2	Bottom Face	0.553	1.4	0.079	0.0685	-0.179	164.2	1.66	0.01	Not required
#122	WLAN 2.4G		1.11	0	0.0558	-0.094	-0.177				

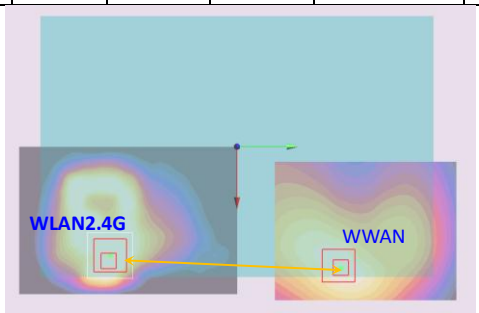

Plot No	Band	Position	SAR (W/kg)	Gap (cm)	SAR peak location (m)			3D distance (cm)	Pair SAR sum (W/kg)	SPLSR	Simultaneous SAR
					X	Y	Z				
#127	GSM850	Bottom Face	1.129	0	0.0735	0.079	-0.179	173.9	2.24	0.02	Not required
#122	WLAN 2.4G		1.11	0	0.0558	-0.094	-0.177				

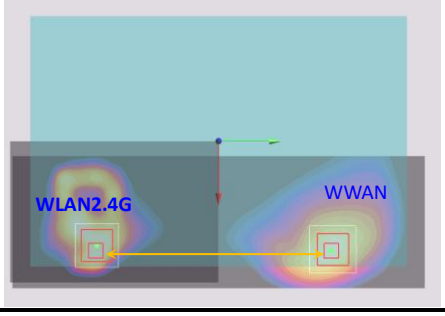

Plot No	Band	Position	SAR (W/kg)	Gap (cm)	SAR peak location (m)			3D distance (cm)	Pair SAR sum (W/kg)	SPLSR	Simultaneous SAR
					X	Y	Z				
#130	WCDMA V	Bottom Face	1.058	0	0.0705	0.0805	-0.179	175.1	2.17	0.02	Not required
#122	WLAN 2.4G		1.11	0	0.0558	-0.094	-0.177				

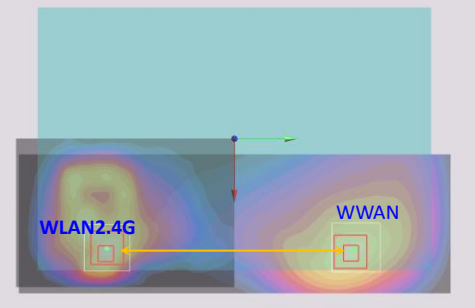

Plot No	Band	Position	SAR (W/kg)	Gap (cm)	SAR peak location (m)			3D distance (cm)	Pair SAR sum (W/kg)	SPLSR	Simultaneous SAR
					X	Y	Z				
#29	WCDMA II	Bottom Face	0.656	0	0.082	0.0775	-0.178	173.5	1.77	0.01	Not required
#122	WLAN 2.4G		1.11	0	0.0558	-0.094	-0.177				

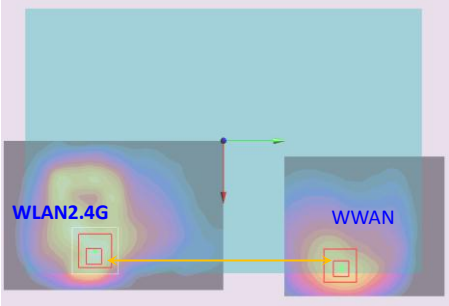

Plot No	Band	Position	SAR (W/kg)	Gap (cm)	SAR peak location (m)			3D distance (cm)	Pair SAR sum (W/kg)	SPLSR	Simultaneous SAR
					X	Y	Z				
#92	LTE Band 17	Bottom Face	0.527	0	0.0805	0.071	-0.179	166.9	1.64	0.01	Not required
#122	WLAN 2.4G		1.11	0	0.0558	-0.094	-0.177				

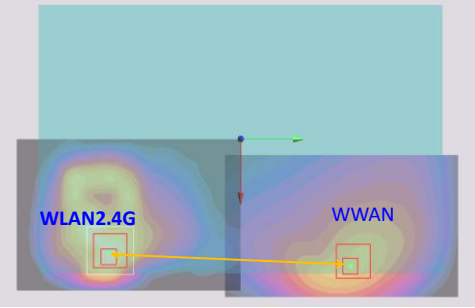

Plot No	Band	Position	SAR (W/kg)	Gap (cm)	SAR peak location (m)			3D distance (cm)	Pair SAR sum (W/kg)	SPLSR	Simultaneous SAR
					X	Y	Z				
#79	LTE Band 5	Bottom Face	0.513	0	0.0765	0.077	-0.178	172.3	1.62	0.01	Not required
#122	WLAN 2.4G		1.11	0	0.0558	-0.094	-0.177				

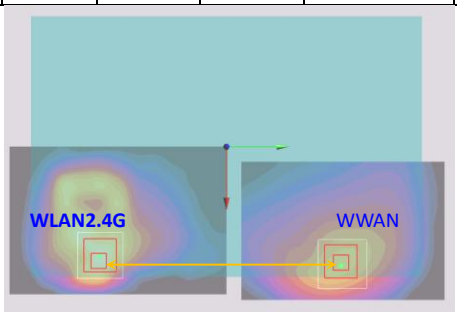

Plot No	Band	Position	SAR (W/kg)	Gap (cm)	SAR peak location (m)			3D distance (cm)	Pair SAR sum (W/kg)	SPLSR	Simultaneous SAR
					X	Y	Z				
#158	LTE Band 4	Bottom Face	0.596	0	0.0785	0.0805	-0.175	176.0	1.71	0.01	Not required
#122	WLAN 2.4G		1.11	0	0.0558	-0.094	-0.177				

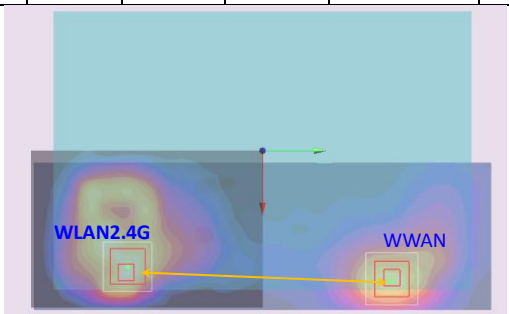

Plot No	Band	Position	SAR (W/kg)	Gap (cm)	SAR peak location (m)			3D distance (cm)	Pair SAR sum (W/kg)	SPLSR	Simultaneous SAR
					X	Y	Z				
#36	LTE Band 2	Bottom Face	0.674	0	0.082	0.079	-0.178	175.0	1.78	0.01	Not required
#122	WLAN 2.4G		1.11	0	0.0558	-0.094	-0.177				

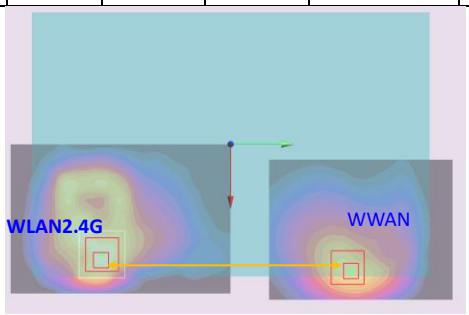

Plot No	Band	Position	SAR (W/kg)	Gap (cm)	3D distance (cm)	Pair SAR sum (W/kg)	SPLSR	Simultaneous SAR
	BT	Curved surface of Edge 1_ at 0cm	0.236	0	178.76	1.63	0.01	Not required
160	LTE Band 4		1.393	0				

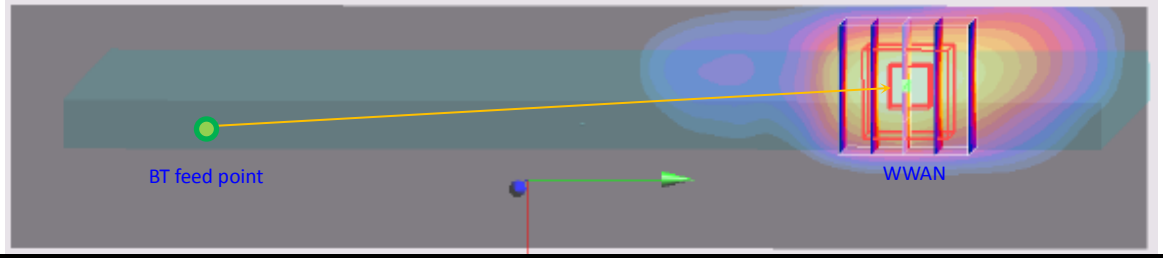

Note:

1. Per KDB 447498 D01v05, SAR test exclusion is determined by the SAR to peak location separation ratio, SPLSR = $(SAR_1 + SAR_2)^{1.5}$ / (*min. separation distance, mm*).
2. Bluetooth SAR is estimated per KDB 447498 D01v05, and the SAR peak location is estimated to be the antenna feed point since it's closer to the WWAN SAR peak location than geometric-center of Bluetooth antenna.
3. Bluetooth antenna feed location is projected on to SAR measurement coordinate, according the EUT placed under the platform with the geometric-center aligned to x=0/y=0 origin.
4. If SPLSR ≤ 0.04, simultaneously transmission SAR is not necessary.

Test Engineer： Vic Yang, Ted Sun, and Cona Huang

12. Uncertainty Assessment

The component of uncertainly may generally be categorized according to the methods used to evaluate them. The evaluation of uncertainly by the statistical analysis of a series of observations is termed a Type An evaluation of uncertainty. The evaluation of uncertainty by means other than the statistical analysis of a series of observation is termed a Type B evaluation of uncertainty. Each component of uncertainty, however evaluated, is represented by an estimated standard deviation, termed standard uncertainty, which is determined by the positive square root of the estimated variance.

A Type A evaluation of standard uncertainty may be based on any valid statistical method for treating data. This includes calculating the standard deviation of the mean of a series of independent observations; using the method of least squares to fit a curve to the data in order to estimate the parameter of the curve and their standard deviations; or carrying out an analysis of variance in order to identify and quantify random effects in certain kinds of measurement.

A type B evaluation of standard uncertainty is typically based on scientific judgment using all of the relevant information available. These may include previous measurement data, experience, and knowledge of the behavior and properties of relevant materials and instruments, manufacture's specification, data provided in calibration reports and uncertainties assigned to reference data taken from handbooks. Broadly speaking, the uncertainty is either obtained from an outdoor source or obtained from an assumed distribution, such as the normal distribution, rectangular or triangular distributions indicated in Table 12.1

Uncertainty Distributions	Normal	Rectangular	Triangular	U-Shape
Multi-plying Factor[(a)]	1/k[(b)]	$1/\sqrt{3}$	$1/\sqrt{6}$	$1/\sqrt{2}$

(a) standard uncertainty is determined as the product of the multiplying factor and the estimated range of variations in the measured quantity

(b) κ is the coverage factor

Table 12.1 Standard Uncertainty for Assumed Distribution

The combined standard uncertainty of the measurement result represents the estimated standard deviation of the result. It is obtained by combining the individual standard uncertainties of both Type A and Type B evaluation using the usual "root-sum-squares" (RSS) methods of combining standard deviations by taking the positive square root of the estimated variances.

Expanded uncertainty is a measure of uncertainty that defines an interval about the measurement result within which the measured value is confidently believed to lie. It is obtained by multiplying the combined standard uncertainty by a coverage factor. Typically, the coverage factor ranges from 2 to 3. Using a coverage factor allows the true value of a measured quantity to be specified with a defined probability within the specified uncertainty range. For purpose of this document, a coverage factor two is used, which corresponds to confidence interval of about 95 %. The DASY uncertainty Budget is shown in the following tables:

Error Description	Uncertainty Value (±%)	Probability Distribution	Divisor	Ci (1g)	Ci (10g)	Standard Uncertainty (1g)	Standard Uncertainty (10g)
Measurement System							
Probe Calibration	6.0	Normal	1	1	1	± 6.0 %	± 6.0 %
Axial Isotropy	4.7	Rectangular	√3	0.7	0.7	± 1.9 %	± 1.9 %
Hemispherical Isotropy	9.6	Rectangular	√3	0.7	0.7	± 3.9 %	± 3.9 %
Boundary Effects	1.0	Rectangular	√3	1	1	± 0.6 %	± 0.6 %
Linearity	4.7	Rectangular	√3	1	1	± 2.7 %	± 2.7 %
System Detection Limits	1.0	Rectangular	√3	1	1	± 0.6 %	± 0.6 %
Readout Electronics	0.3	Normal	1	1	1	± 0.3 %	± 0.3 %
Response Time	0.8	Rectangular	√3	1	1	± 0.5 %	± 0.5 %
Integration Time	2.6	Rectangular	√3	1	1	± 1.5 %	± 1.5 %
RF Ambient Noise	3.0	Rectangular	√3	1	1	± 1.7 %	± 1.7 %
RF Ambient Reflections	3.0	Rectangular	√3	1	1	± 1.7 %	± 1.7 %
Probe Positioner	0.4	Rectangular	√3	1	1	± 0.2 %	± 0.2 %
Probe Positioning	2.9	Rectangular	√3	1	1	± 1.7 %	± 1.7 %
Max. SAR Eval.	1.0	Rectangular	√3	1	1	± 0.6 %	± 0.6 %
Test Sample Related							
Device Positioning	2.9	Normal	1	1	1	± 2.9 %	± 2.9 %
Device Holder	3.6	Normal	1	1	1	± 3.6 %	± 3.6 %
Power Drift	5.0	Rectangular	√3	1	1	± 2.9 %	± 2.9 %
Phantom and Setup							
Phantom Uncertainty	4.0	Rectangular	√3	1	1	± 2.3 %	± 2.3 %
Liquid Conductivity (Target)	5.0	Rectangular	√3	0.64	0.43	± 1.8 %	± 1.2 %
Liquid Conductivity (Meas.)	2.5	Normal	1	0.64	0.43	± 1.6 %	± 1.1 %
Liquid Permittivity (Target)	5.0	Rectangular	√3	0.6	0.49	± 1.7 %	± 1.4 %
Liquid Permittivity (Meas.)	2.5	Normal	1	0.6	0.49	± 1.5 %	± 1.2 %
Combined Standard Uncertainty						± 11.0 %	± 10.8 %
Coverage Factor for 95 %						K=2	
Expanded Uncertainty						**± 22.0 %**	**± 21.5 %**

Table 12.2 Uncertainty Budget of DASY for frequency range 300 MHz to 3 GHz

13. References

[1] FCC 47 CFR Part 2 “Frequency Allocations and Radio Treaty Matters; General Rules and Regulations”

[2] ANSI/IEEE Std. C95.1-1992, “IEEE Standard for Safety Levels with Respect to Human Exposure to Radio Frequency Electromagnetic Fields, 3 kHz to 300 GHz”, September 1992

[3] IEEE Std. 1528-2003, “Recommended Practice for Determining the Peak Spatial-Average Specific Absorption Rate (SAR) in the Human Head from Wireless Communications Devices: Measurement Techniques”, December 2003

[4] FCC OET Bulletin 65 (Edition 97-01) Supplement C (Edition 01-01), “Evaluating Compliance with FCC Guidelines for Human Exposure to Radiofrequency Electromagnetic Fields”, June 2001

[5] SPEAG DASY System Handbook

[6] FCC KDB 447498 D01 v04, “Mobile and Portable Device RF Exposure Procedures and Equipment Authorization Policies”, November 2009

[7] FCC KDB 616217 D03 v01, “SAR Evaluation Considerations for Laptop/Notebook/Netbook and Tablet Computers”, November 2009

[8] FCC KDB 941225 D01 v02, “SAR Measurement Procedures for 3G Devices – CDMA 2000 / Ev-Do / WCDMA / HSDPA / HSPA”, October 2007

[9] FCC KDB 941225 D03 v01, “Recommended SAR Test Reduction Procedures for GSM / GPRS / EDGE”, December 2008

[10] FCC KDB 941225 D05 v01, “SAR Test Considerations for LTE Handsets and Data Modems”, December 2010

[11] FCC KDB 388624 D02, "Permit But Ask List", December 2011.

Appendix A. Plots of System Performance Check

The plots are shown as follows.

Appendix B. Plots of SAR Measurement

The plots are shown as follows.

Appendix C. DASY Calibration Certificate

The DASY calibration certificates are shown as follows.