Copyright Information

No part of this manual, including the products and software described in it, may be reproduced, transmitted, transcribed, stored in a retrieval system, or translated into any language in any form or by any means, except documentation kept by the purchaser for backup purposes, without the express written permission of ASUSTeK COMPUTER INC. (“ASUS”).

ASUS PROVIDES THIS MANUAL “AS IS” WITHOUT WARRANTY OF ANY KIND, EITHER EXPRESS OR IMPLIED, INCLUDING BUT NOT LIMITED TO THE IMPLIED WARRANTIES OR CONDITIONS OF MERCHANTABILITY OR FITNESS FOR A PARTICULAR PURPOSE. IN NO EVENT SHALL ASUS, ITS DIRECTORS, OFFICERS, EMPLOYEES OR AGENTS BE LIABLE FOR ANY INDIRECT, SPECIAL, INCIDENTAL, OR CONSEQUENTIAL DAMAGES (INCLUDING DAMAGES FOR LOSS OF PROFITS, LOSS OF BUSINESS, LOSS OF USE OR DATA, INTERRUPTION OF BUSINESS AND THE LIKE), EVEN IF ASUS HAS BEEN ADVISED OF THE POSSIBILITY OF SUCH DAMAGES ARISING FROM ANY DEFECT OR ERROR IN THIS MANUAL OR PRODUCT.

Product warranty or service will not be extended if: (1) the product is repaired, modified or altered, unless such repair, modification of alteration is authorized in writing by ASUS; or (2) the serial number of the product is defaced or missing.

Products and corporate names appearing in this manual may or may not be registered trademarks or copyrights of their respective companies, and are used only for identification or explanation and to the owners’ benefit, without intent to infringe.

SPECIFICATIONS AND INFORMATION CONTAINED IN THIS MANUAL ARE FURNISHED FOR INFORMATIONAL USE ONLY, AND ARE SUBJECT TO CHANGE AT ANY TIME WITHOUT NOTICE, AND SHOULD NOT BE CONSTRUED AS A COMMITMENT BY ASUS. ASUS ASSUMES NO RESPONSIBILITY OR LIABILITY FOR ANY ERRORS OR INACCURACIES THAT MAY APPEAR IN THIS MANUAL, INCLUDING THE PRODUCTS AND SOFTWARE DESCRIBED IN IT.

Copyright © 2003 ASUSTeK COMPUTER INC. All Rights Reserved.

Limitation of Liability

Circumstances may arise where because of a default on ASUS’ part or other liability, you are entitled to recover damages from ASUS. In each such instance, regardless of the basis on which you are entitled to claim damages from ASUS, ASUS is liable for no more than damages for bodily injury (including death) and damage to real property and tangible personal property; or any other actual and direct damages resulted from omission or failure of performing legal duties under this Warranty Statement, up to the listed contract price of each product.

ASUS will only be responsible for or indemnify you for loss, damages or claims based in contract, tort or infringement under this Warranty Statement.

This limit also applies to ASUS’ suppliers and its reseller. It is the maximum for which ASUS, its suppliers, and your reseller are collectively responsible.

UNDER NO CIRCUMSTANCES IS ASUS LIABLE FOR ANY OF THE FOLLOWING: (1) THIRD-PARTY CLAIMS AGAINST YOU FOR DAMAGES; (2) LOSS OF, OR DAMAGE TO, YOUR RECORDS OR DATA; OR (3) SPECIAL, INCIDENTAL, OR INDIRECT DAMAGES OR FOR ANY ECONOMIC CONSEQUENTIAL DAMAGES (INCLUDING LOST PROFITS OR SAVINGS), EVEN IF ASUS, ITS SUPPLIERS OR YOUR RESELLER IS INFORMED OF THEIR POSSIBILITY.

Notebook PC
Hardware User's Manual

Product Name: **Notebook PC Hardware**
Manual Revision: **1 E1660**
Release Date: **June 2004**

Federal Communications Commission Statement

This device complies with FCC Rules Part 15. Operation is subject to the following two conditions:

- This device may not cause harmful interference, and
- This device must accept any interference received, including interference that may cause undesired operation.

This equipment has been tested and found to comply with the limits for a class B digital device, pursuant to Part 15 of the Federal Communications Commission (FCC) rules. These limits are designed to provide reasonable protection against harmful interference in a residential installation. This equipment generates, uses, and can radiate radio frequency energy and, if not installed and used in accordance with the instructions, may cause harmful interference to radio communications. However, there is no guarantee that interference will not occur in a particular installation. If this equipment does cause harmful interference to radio or television reception, which can be determined by turning the equipment off and on, the user is encouraged to try to correct the interference by one or more of the following measures:

- Reorient or relocate the receiving antenna.
- Increase the separation between the equipment and receiver.
- Connect the equipment into an outlet on a circuit different from that to which the receiver is connected.
- Consult the dealer or an experienced radio/TV technician for help.

WARNING! The use of a shielded-type power cord is required in order to meet FCC emission limits and to prevent interference to the nearby radio and television reception. It is essential that only the supplied power cord be used. Use only shielded cables to connect I/O devices to this equipment. You are cautioned that changes or modifications not expressly approved by the party responsible for compliance could void your authority to operate the equipment.

Reprinted from the Code of Federal Regulations #47, part 15.193, 1993. Washington DC: Office of the Federal Register, National Archives and Records Administration, U.S. Government Printing Office.

Power Safety Requirement

Products with electrical current ratings up to 6A and weighing more than 3Kg must use approved power cords greater than or equal to: H05VV-F, 3G, 0.75mm^2 or H05VV-F, 2G, 0.75mm^2.

Canadian Department of Communications Statement

This digital apparatus does not exceed the Class B limits for radio noise emissions from digital apparatus set out in the Radio Interference Regulations of the Canadian Department of Communications.

This Class B digital apparatus complies with Canadian ICES-003.

(Cet appareil numérique de la classe B est conforme à la norme NMB-003 du Canada.)

For use with AC Adaptor Model (Pour Utiliser Avec Modele): PA-1121-02 (120W), ADP-90FB (90W), ADP-65DB (65W)

Nordic Cautions (for Notebook PC with Lithium-Ion Battery)

CAUTION! Danger of explosion if battery is incorrectly replaced. Replace only with the same or equivalent type recommended by the manufacturer. Dispose of used batteries according to the manufacturer's instructions. (English)

ATTENZIONE! Rischio di esplosione della batteria se sostituita in modo errato. Sostituire la batteria con un una di tipo uguale o equivalente consigliata dalla fabbrica. Non disperdere le batterie nell'ambiente. (Italian)

VORSICHT! Explosionsgetahr bei unsachgemäßen Austausch der Batterie. Ersatz nur durch denselben oder einem vom Hersteller empfohlenem ähnlichen Typ. Entsorgung gebrauchter Batterien nach Angaben des Herstellers. (German)

ADVARSELI! Lithiumbatteri - Eksplosionsfare ved fejlagtig håndtering. Udskiftning må kun ske med batteri af samme fabrikat og type. Levér det brugte batteri tilbage til leverandøren. (Danish)

VARNING! Explosionsfara vid felaktigt batteribyte. Använd samma batterityp eller en ekvivalent typ som rekommenderas av apparattillverkaren. Kassera använt batteri enligt fabrikantens instruktion. (Swedish)

VAROITUS! Paristo voi räjähtää, jos se on virheellisesti asennettu. Vaihda paristo ainoastaan laitevalmistajan sousittelemaan tyyppiin. Hävitä käytetty paristo valmistagan ohjeiden mukaisesti. (Finnish)

ATTENTION! Il y a danger d'explosion s'il y a remplacement incorrect de la batterie. Remplacer uniquement avec une batterie du mêre type ou d'un type équivalent recommandé par le constructeur. Mettre au rebut les batteries usagées conformément aux instructions du fabricant. (French)

ADVARSEL! Eksplosjonsfare ved feilaktig skifte av batteri. Benytt samme batteritype eller en tilsvarende type anbefalt av apparatfabrikanten. Brukte batterier kasseres i henhold til fabrikantens instruksjoner. (Norwegian)

注意！この装置は、現在設置されている場所で妨害波の測定がされた情報技術装置です。
この場所以外で使用する場合は、その場所で、再び妨害波の測定が必要となります。(Japanese)

Macrovision Corporation Product Notice

This product incorporates copyright protection technology that is protected by method claims of certain U.S.A. patents and other intellectual property rights owned by Macrovision Corporation and other rights owners. Use of this copyright protection technology must be authorized by Macrovision Corporation, and is intended for home and other limited viewing uses only *unless otherwise authorized by Macrovision Corporation*. Reverse engineering or disassembly is prohibited.

CDRH Regulations

The Center for Devices and Radiological Health (CDRH) of the U.S. Food and Drug Administration implemented regulations for laser products on August 2, 1976. These regulations apply to laser products manufactured from August 1, 1976. Compliance is mandatory for products marketed in the United States.

WARNING: Use of controls or adjustments or performance of procedures other than those specified herein or in the laser product installation guide may result in hazardous radiation exposure.

Safety Statements

The following safety precautions will increase the life of the Notebook PC. Follow all precautions and instructions. Except as described in this manual, refer all servicing to qualified personnel. Do not use damaged power cords, accessories, or other peripherals. Do not use strong solvents such as thinners, benzene, or other chemicals on or near the surface.

Disconnect the AC power and remove the battery pack(s) before cleaning. Wipe the Notebook PC using a clean cellulose sponge or chamois cloth dampened with a solution of nonabrasive detergent and a few drops of warm water and remove any extra moisture with a dry cloth.

DO NOT place on uneven or unstable work surfaces. Seek servicing if the casing has been damaged.

DO NOT place or drop objects on top and do not shove any foreign objects into the Notebook PC.

DO NOT press or touch the display panel. Do not place together with small items that may scratch or enter the Notebook PC.

DO NOT expose to strong magnetic or electrical fields.

DO NOT leave the Notebook PC on your lap or any part of the body while the Notebook PC is turned ON or is charging in order to prevent discomfort or injury from heat exposure.

0°C/32°F

Safe Operating Temperatures: This notebook PC should be used in environments with ambient temperatures between 0°C/32°F and 30°C/86°F.

DO NOT expose to or use near liquids, rain, or moisture. **DO NOT** use the modem during an electrical storm.

DO NOT expose to dirty or dusty environments. **DO NOT** operate during a gas leak.

DO NOT expose to extreme temperatures above 50˚C (122˚F) or to direct sunlight. Do not block the fan vents!

DO NOT expose to extreme temperatures (below 0˚C (32˚F), otherwise the Notebook PC may not boot.

DO NOT throw batteries in fires as they may explode. Check local codes for special battery disposal instructions.

30°C/86°F

Transportation Precautions

To prepare the Notebook PC for transport, you should turn it OFF and **disconnect all external peripherals to prevent damage to the connectors**. The hard disk drive's head retracts when the power is turned OFF to prevent scratching of the hard disk surface during transport. Therefore, you should not transport the Notebook PC while the power is still ON. Close the display panel and check that it is latched securely in the closed position to protect the keyboard and display panel.

Cover Your Notebook PC

Use a carrying case such as the one supplied with your Notebook PC to protect it from dirt, water, shock, and scratches.

NOTE: The surface glaze is easily dulled if not properly cared for. Be careful not to rub or scrap the Notebook PC surfaces when transporting your Notebook PC.

Charge Your Batteries

If you intend to use battery power, be sure to fully charge your battery pack and any optional battery packs before going on long trips. Remember that the power adapter charges the battery pack as long as it is plugged into the computer and an AC power source. Be aware that it takes much longer to charge the battery pack when the Notebook PC is in use.

Airplane Precautions

Contact your airline if you want to use the Notebook PC on the airplane. Most airlines will have restrictions for using electronic devices. Most airlines will allow electronic use only between and not during takeoffs and landings.

CAUTION! There are three main types of airport security devices: X-ray machines (used on items placed on conveyor belts), magnetic detectors (used on people walking through security checks), and magnetic wands (hand-held devices used on people or individual items). You can send your Notebook PC and diskettes through airport X-ray machines. However, it is recommended that you do not send your Notebook PC or diskettes through airport magnetic detectors or expose them to magnetic wands.

CTR 21 Approval (for Notebook PC with built-in Modem)

Danish

»Udstyret er i henhold til Rådets beslutning 98/482/EF EU-godkendt til at blive opkoblet på de offentlige telefonnet som enkeltforbundet terminal. På grund af forskelle mellem de offentlige telefonnet i de forskellige lande giver godkendelsen dog ikke i sig selv ubetinget garanti for, at udstyret kan fungere korrekt på samtlige nettermineringspunkter på de offentlige telefonnet.

I tilfælde af problemer bør De i første omgang henvende Dem til leverandøren af udstyret.«

Dutch

„Dit apparaat is goedgekeurd volgens Beschikking 98/482/EG van de Raad voor de pan-Europese aansluiting van enkelvoudige eindapparatuur op het openbare geschakelde telefoonnetwerk (PSTN). Gezien de verschillen tussen de individuele PSTN's in de verschillende landen, biedt deze goedkeuring op zichzelf geen onvoorwaardelijke garantie voor een succesvolle werking op elk PSTN-netwerkaansluitpunt.

Neem bij problemen in eerste instantie contact op met de leverancier van het apparaat.".

English

'The equipment has been approved in accordance with Council Decision 98/482/EC for pan-European single terminal connection to the public switched telephone network (PSTN). However, due to differences between the individual PSTNs provided in different countries, the approval does not, of itself, give an unconditional assurance of successful operation on every PSTN network termination point.

In the event of problems, you should contact your equipment supplier in the first instance.'

Finnish

"Tämä laite on hyväksytty neuvoston päätöksen 98/482/EY mukaisesti liitettäväksi yksittäisenä laitteena yleiseen kytkentäiseen puhelinverkkoon (PSTN) EU:n jäsenvaltioissa. Eri maiden yleisten kytkentäisten puhelinverkkojen välillä on kuitenkin eroja, joten hyväksyntä ei sellaisenaan takaa häiriötöntä toimintaa kaikkien yleisten kytkentäisten puhelinverkkojen liityntäpisteissä.

Ongelmien ilmetessä ottakaa viipymättä yhteyttä laitteen toimittajaan."

French

«Cet équipement a reçu l'agrément, conformément à la décision 98/482/CE du Conseil, concernant la connexion paneuropéenne de terminal unique aux réseaux téléphoniques publics commutés (RTPC). Toutefois, comme il existe des différences d'un pays à l'autre entre les RTPC, l'agrément en soi ne constitue pas une garantie absolue de fonctionnement optimal à chaque point de terminaison du réseau RTPC.

En cas de problème, vous devez contacter en premier lieu votre fournisseur.»

German

„Dieses Gerät wurde gemäß der Entscheidung 98/482/EG des Rates europaweit zur Anschaltung als einzelne Endeinrichtung an das öffentliche Fernsprechnetz zugelassen. Aufgrund der zwischen den öffentlichen Fernsprechnetzen verschiedener Staaten bestehenden Unterschiede stellt diese Zulassung an sich jedoch keine unbedingte Gewähr für einen erfolgreichen Betrieb des Geräts an jedem Netzabschlußpunkt dar.

Falls beim Betrieb Probleme auftreten, sollten Sie sich zunächst an ihren Fachhändler wenden."

Greek

«Ο εξοπλισμός έχει εγκριθεί για πανευρωπαϊκή σύνδεση μεμονωμένου τερματικού με το δημόσιο τηλεφωνικό δίκτυο μεταγωγής (PSTN), σύμφωνα με την απόφαση 98/482/ΕΚ του Συμβουλίου· ωστόσο, επειδή υπάρχουν διαφορές μεταξύ των επιμέρους PSTN που παρέχονται σε διάφορες χώρες, η έγκριση δεν παρέχει αφ' εαυτής ανεπιφύλακτη εξασφάλιση επιτυχούς λειτουργίας σε κάθε σημείο απόληξης του δικτύου PSTN.

Εάν ανακύψουν προβλήματα, θα πρέπει κατ' αρχάς να απευθύνεστε στον προμηθευτή του εξοπλισμού σας.»

Italian

«La presente apparecchiatura terminale è stata approvata in conformità della decisione 98/482/CE del Consiglio per la connessione paneuropea come terminale singolo ad una rete analogica PSTN. A causa delle differenze tra le reti dei differenti paesi, l'approvazione non garantisce però di per sé il funzionamento corretto in tutti i punti di terminazione di rete PSTN.

In caso di problemi contattare in primo luogo il fornitore del prodotto.»

Portuguese

«Este equipamento foi aprovado para ligação pan-europeia de um único terminal à rede telefónica pública comutada (RTPC) nos termos da Decisão 98/482/CE. No entanto, devido às diferenças existentes entre as RTPC dos diversos países, a aprovação não garante incondicionalmente, por si só, um funcionamento correcto em todos os pontos terminais da rede da RTPC.

Em caso de problemas, deve entrar-se em contacto, em primeiro lugar, com o fornecedor do equipamento.»

Spanish

«Este equipo ha sido homologado de conformidad con la Decisión 98/482/CE del Consejo para la conexión paneuropea de un terminal simple a la red telefónica pública conmutada (RTPC). No obstante, a la vista de las diferencias que existen entre las RTPC que se ofrecen en diferentes países, la homologación no constituye por sí sola una garantía incondicional de funcionamiento satisfactorio en todos los puntos de terminación de la red de una RTPC.

En caso de surgir algún problema, procede ponerse en contacto en primer lugar con el proveedor del equipo.».

Swedish

"Utrustningen har godkänts i enlighet med rådets beslut 98/482/EG för alleuropeisk anslutning som enskild terminal till det allmänt tillgängliga kopplade telenätet (PSTN). På grund av de skillnader som finns mellan telenätet i olika länder utgör godkännandet emellertid inte i sig självt en absolut garanti för att utrustningen kommer att fungera tillfredsställande vid varje telenätsanslutningspunkt.

Om problem uppstår bör ni i första hand kontakta leverantören av utrustningen."

UL Safety Notices

Required for UL 1459 covering telecommunications (telephone) equipment intended to be electrically connected to a telecommunication network that has an operating voltage to ground that does not exceed 200V peak, 300V peak-to-peak, and 105V rms, and installed or used in accordance with the National Electrical Code (NFPA 70).

When using the Notebook PC modem, basic safety precautions should always be followed to reduce the risk of fire, electric shock, and injury to persons, including the following:

- **Do not use** the Notebook PC near water, for example, near a bath tub, wash bowl, kitchen sink or laundry tub, in a wet basement or near a swimming pool.
- **Do not use** the Notebook PC during an electrical storm. There may be a remote risk of electric shock from lightning.
- **Do not use** the Notebook PC in the vicinity of a gas leak.

Required for UL 1642 covering primary (nonrechargeable) and secondary (rechargeable) lithium batteries for use as power sources in products. These batteries contain metallic lithium, or a lithium alloy, or a lithium ion, and may consist of a single electrochemical cell or two or more cells connected in series, parallel, or both, that convert chemical energy into electrical energy by an irreversible or reversible chemical reaction.

- **Do not** dispose the Notebook PC battery pack in a fire, as they may explode. Check with local codes for possible special disposal instructions to reduce the risk of injury to persons due to fire or explosion.
- **Do not** use power adapters or batteries from other devices to reduce the risk of injury to persons due to fire or explosion. Use only UL certified power adapters or batteries supplied by the manufacturer or authorized retailers.

Notebook PC Optical Drive

Laser Safety Information

Internal or external optical drives sold with this Notebook PC contains a CLASS 1 LASER PRODUCT (LASER KLASSE 1 PRODUKT). Laser classifications can be found in the glossary at the end of this user's manual.

WARNING: Making adjustments or performing procedures other than those specified in the user's manual may result in hazardous laser exposure. Do not attempt to disassemble the optical drive. For your safety, have the optical drive serviced only by an authorized service provider.

Service warning label

CAUTION: INVISIBLE LASER RADIATION WHEN OPEN. DO NOT STARE INTO BEAM OR VIEW DIRECTLY WITH OPTICAL INSTRUMENTS.

Contents

1. Introducing the Notebook PC 11

About This User's Manual 12
Notes For This Manual 12
Preparing your Notebook PC 13

2. Knowing the Parts 15

Top Side 16
Bottom Side 18
Right Side 20
Left Side 22
Front Side 23
Rear Side 24

3. Getting Started 25

Using the Battery Pack 26
Installing and Removing the Battery Pack 26
Charging the Battery Pack 27
Battery Care 27
Operating Systems 27
Support Software 27
Power Connection 29
Powering ON The Notebook PC 29
The Power-On Self Test (POST) 29
Power Management - "Stand By" & "Hibernate" 30
Power Management - "Stand By" & "Hibernate" 30
Restarting or Rebooting 31
Powering OFF the Notebook PC 31
Restarting or Rebooting 31
Powering OFF the Notebook PC 32
Using the Keyboard 33
Colored Hot Keys 33
Microsoft Windows™ Keys 34
Keyboard as a Numeric Keypad 35
Keyboard as Cursors 35
Instant Launch Keys and Status Indicators 36
Instant Launch Keys 36
Status Indicators (above keyboard) 37
Status Indicators (front edge) 38
CD Player Control Buttons and Indicator 38

4. Using the Notebook PC 41

Pointing Device 42
Using the Touchpad 42
Touchpad Usage Illustrations 43
Caring for the Touchpad 44

Optical Drive 45

PC Card (PCMCIA) Socket 47
32-bit CardBus Support 47
Removing a PC Card (PCMCIA) 48
Inserting a PC Card (PCMCIA) 48
Flash Memory Card Reader 49
Modem Connection 50

Modem and Network Connections 51
Network Connection (100/10 Base) 52

AC Power System 53

Battery Power System 53
Charging the Battery Pack 53
Using Battery Power 54

Power Management Modes 55
Full Power Mode & Maximum Performance 55
ACPI 55
Suspend Mode 55
Power Savings 55
Power State Summary 56
Thermal Power Control 56

Notebook PC Upgrades 57
System Memory Expansion 57
Hard Disk Drive Upgrades 57
Processor Upgrades 57

Appendix 59

Optional Accessories 60
USB Hub (Optional) 60
USB 2.0 Slim Combo Drive (Optional) 60

Contents

Wireless LAN Cardbus Card or USB 61
USB Flash Memory Disk 61
USB Communication Cable 61
USB Floppy Disk Drive 62
USB Keyboard and Mouse 62

Optional Connections 63
Monitor Out Connection 63
External Audio Connections 63
Printer Connection 64
IEEE1394 Connection 64
Securing Your Notebook PC 64

DVD-ROM Drive Information 65

Internal Modem Compliancy 66

Glossary 68

Notebook PC Information 74

1. Introducing the Notebook PC

About This User's Manual
Notes For This Manual
Preparing your Notebook PC

About This User's Manual

You are reading the Notebook PC User's Manual. This User's Manual provides information on the various components in the Notebook PC and how to use them. The following are major sections of this User's Manuals:

1. **Introducing the Notebook PC**
   Introduces you to the Notebook PC and this User's Manual.
2. **Knowing the Parts**
   Gives you information on the Notebook PC's components.
3. **Getting Started**
   Gives you information on getting started with the Notebook PC.
4. **Using the Notebook PC**
   Gives you information on using the Notebook PC's components.
5. **Appendix**
   Introduces you to optional accessories and gives additional information.

Notes For This Manual

This User's Manual was created using Macintosh versions of Adobe® PageMaker™ 6.52, Adobe® Photoshop™ 5.5, Adobe® Illustrator® 8.0, and Macromedia® Freehand™ 8.0.1. The body text type used in this manual is "Times" (MAC) or "Times New Roman" (Windows™) and headings are "Helvetica" (MAC) or "Arial" (Windows™). A few notes and warnings in bold are used throughout this guide that you should be aware of in order to complete certain tasks safely and completely. These notes have different degrees of importance as described below:

WARNING! Important information that must be followed for safe operation.

TIP: Tips and useful information for completing tasks.

IMPORTANT! Vital information that must be followed to prevent damage to data, components, or persons.

NOTE: Tips and information for special situations.

< > [ ] **Text enclosed in < > or [ ] represents a key on the keyboard; do not actually type the < > or [ ] and the enclosed letters.**

Preparing your Notebook PC

These are only quick instructions for using your Notebook PC. Read the later pages for detailed information on using your Notebook PC.

1. Install the battery pack

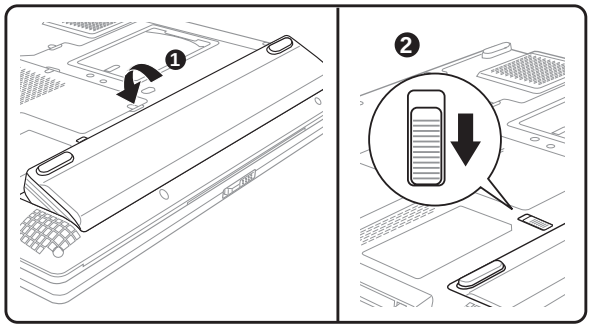

2. Connect the AC Power Adapter

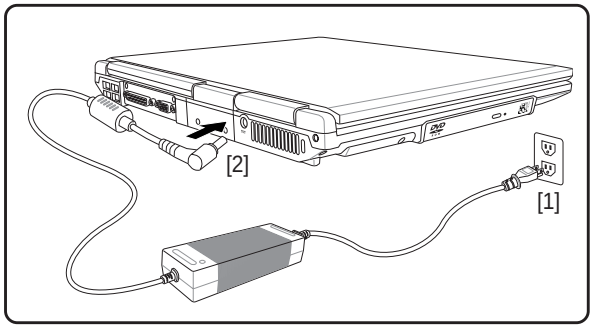

3. Open the Display Panel

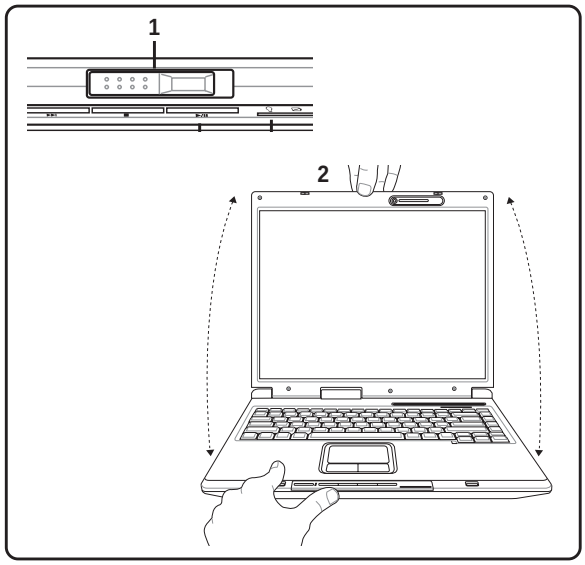

(1) Slide the display release button

(2) Lift the display panel with one hand while holding the system portion with your other hand.

4. Turn ON the Notebook PC

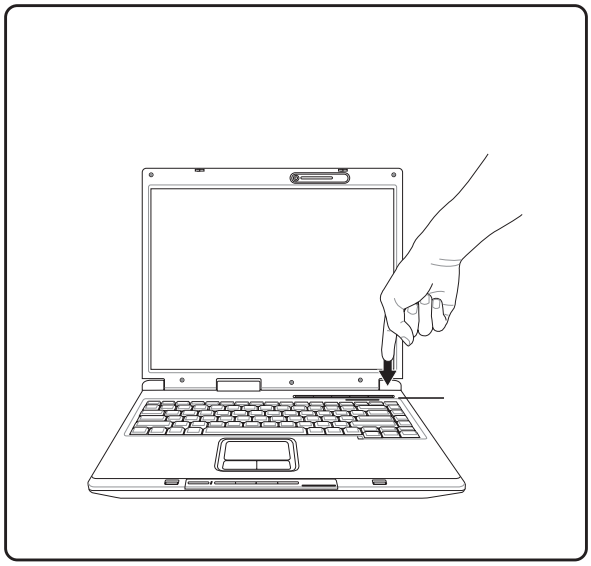

Press the power button and release.

In Windows XP, this button can also be used to safely turn OFF the Notebook PC.

2. Knowing the Parts

Top Side
Bottom Side
Right Side
Left Side
Front Side
Rear Side

Top Side

Refer to the diagram below to identify the components on this side of the Notebook PC. Details are given starting from the top and going clockwise.

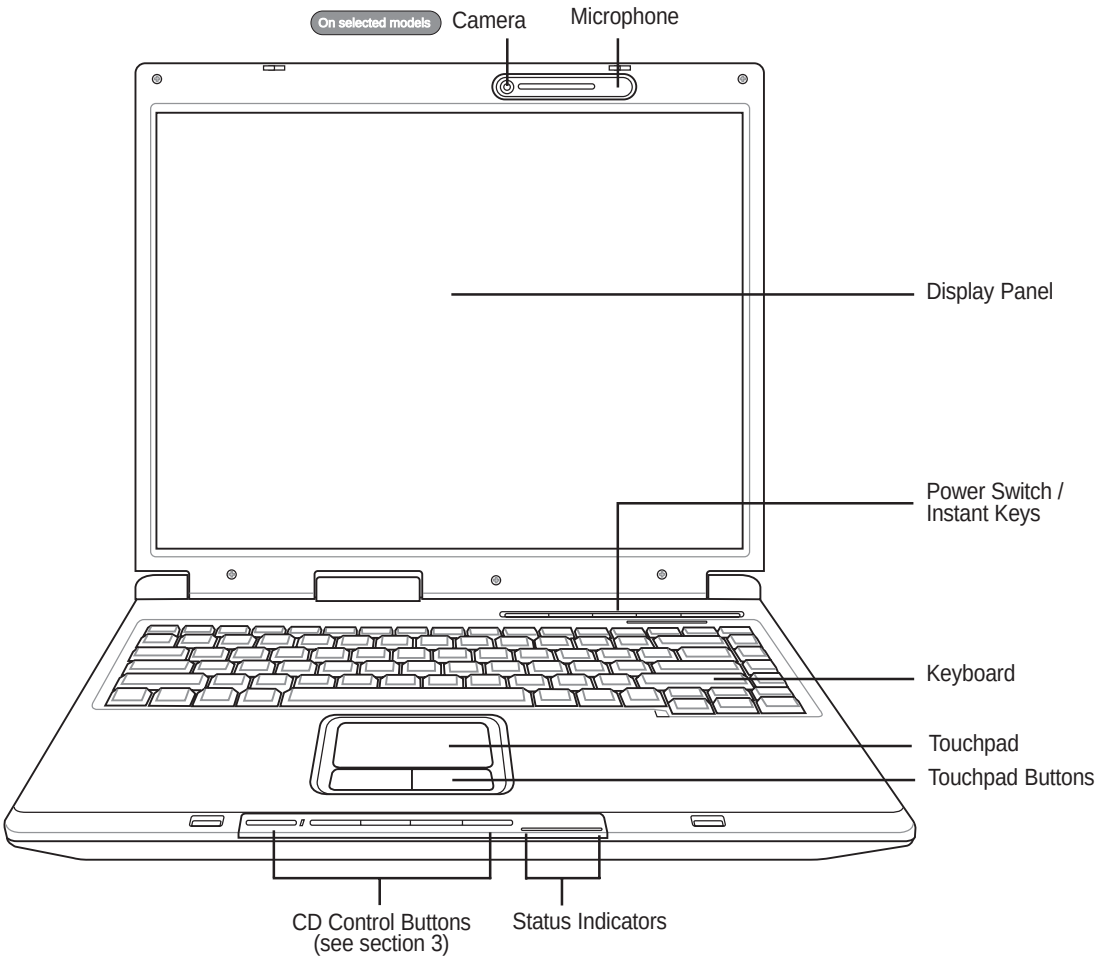

Display Panel Latch

One spring-loaded latch on the front of the Notebook PC locks the display panel in the closed position when the Notebook PC is not in use. To open the display panel, **slide the latch** with your thumb and lift up the display panel with the same thumb. Slowly tilt the display panel forward or backward to a comfortable viewing angle.

WARNING! When opening, do not force the display panel down to the table or else the hinges may break! Never lift the Notebook PC by the display panel!

Camera On selected models

The built-in camera allows picture taking or video recording. Can be used with voice conferencing and other interactive applications.

Microphone (built-in)

The built-in mono microphone can be used for video conferencing, voice narrations, or simple audio recordings.

Display Panel

The display panel functions the same as a desktop monitor. The Notebook PC uses an active matrix TFT LCD, which provides excellent viewing like that of desktop monitors. Unlike desktop monitors, the LCD panel does not produce any radiation or flickering, so it is easier on the eyes.

Power Switch

The power switch allows powering ON and OFF the Notebook PC and recovering from STD. **Push** the switch once to turn ON and once to turn OFF the Notebook PC.

Instant Launch Keys

Instant launch keys allow you to launch frequently used applications with one push of a button. Details provided later in this manual.

Keyboard

The keyboard provides full-sized keys with comfortable travel (depth at which the keys can be depressed) and palm rest for both hands. Two Windows™ function keys are provided to help ease navigation in the Windows™ operating system.

Touchpad and Buttons

The touchpad with its buttons is a pointing device that provides the same functions as a desktop mouse. A software-controlled scrolling function is available after setting up the included touchpad utility to allow easy Windows or web navigation.

LED Status Indicators

Status indicator details are described in section 3.

Bottom Side

Refer to the diagram below to identify the components on this side of the Notebook PC. Details are given starting from the top and going clockwise.

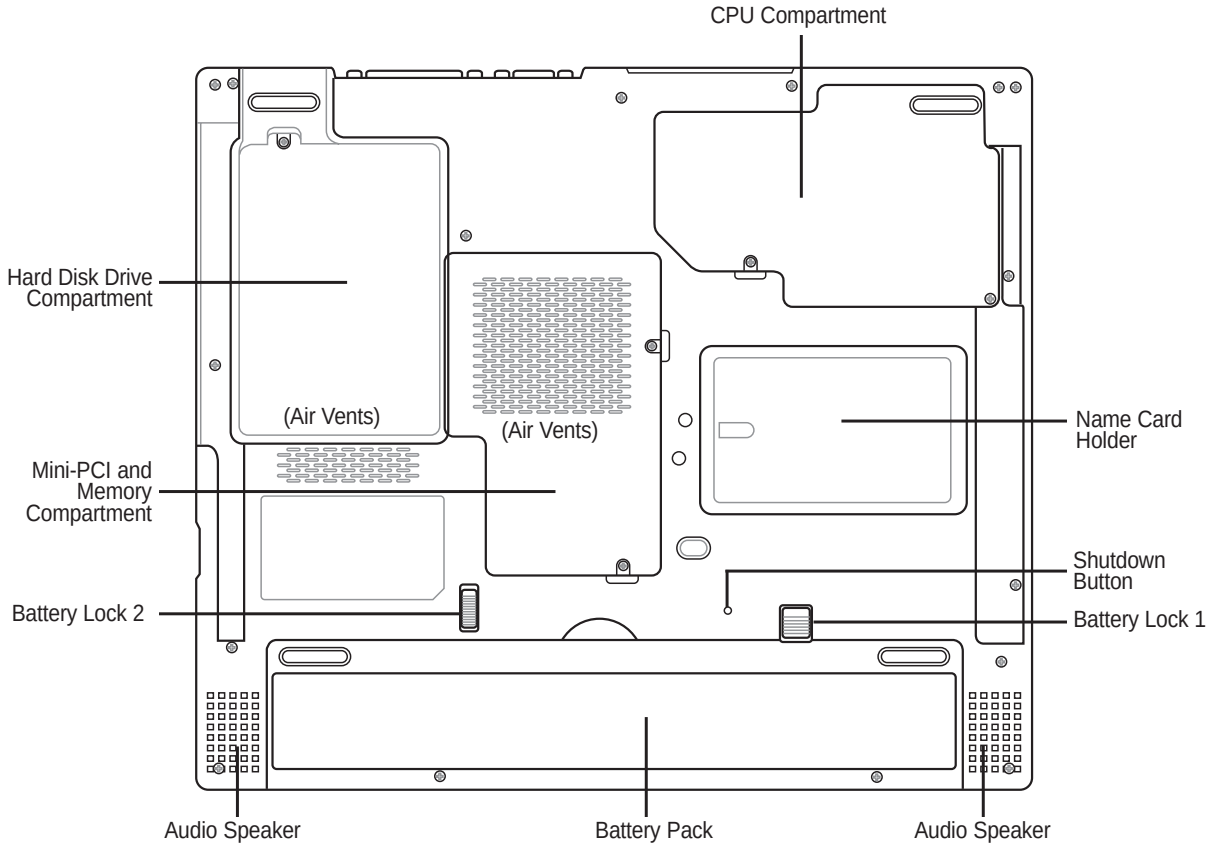

IMPORTANT! The bottom of the Notebook PC can get very hot. Be careful when handling the Notebook PC while it is in operation or recently been in operation. High temperatures are normal during charging or operation. DO NOT PUT THE NOTEBOOK PC ON THE LAP OR OTHER PARTS OF THE BODY TO AVOID INJURY FROM THE HEAT.

Audio Speakers

The built-in speaker allows you to hear audio without additional attachments. The multimedia sound system features an integrated digital audio controller that produces rich, vibrant sound (results improved with external stereo headphones or speakers). All audio features are software controlled.

Battery Pack

The battery pack is actually combined with the Notebook PC's surface in order to reduce thickness. When the battery is released, the surface and battery pack will be seen as a single unit. The battery pack cannot be further disassembled and must be replaced as a single unit.

Battery Lock

The spring loaded latch (lock 1) automatically locks the battery pack when inserted but must be reinforced with a manually operated latch (lock 2). Usage details are described in the battery section later in this manual.

Mini-PCI Compartment

Optional expansion cards can be installed in the mini-PCI compartment. An optional wireless LAN module enables you to stay connected to your LAN while "roaming" to meeting, conference rooms, or other office locations. Full-time, real-time access to email, Internet, and network resources means not only an expanded office space, but also greater productivity.

Memory Compartment

The memory compartment contains an expansion slot for additional memory. Memory installation or upgrades must be done by an authorized retailer or else warranty will be void.

Hard Disk Drive Compartment

The hard disk drive is secured in a compartment. Hard disk drive upgrades are to be done by authorized service centers or dealers only.

Air Vents

The air vents allow cool air to enter and warm air to exit the Notebook PC.

IMPORTANT! Make sure that paper, books, clothing, cables, or other objects do not block any of the air vents or else overheating of the Notebook PC may occur.

Right Side

Refer to the diagram below to identify the components on this side of the Notebook PC.

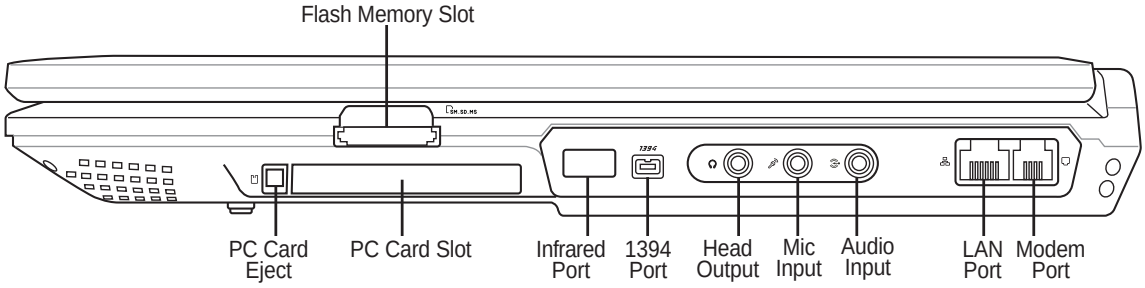

Flash Memory Slot

Normally a PCMCIA or USB memory card reader must be purchased separately in order to use memory cards from devices such as digital cameras, MP3 players, mobile phones, and PDAs. This Notebook PC has a built-in memory card reader that can read the following flash memory cards: Secure Digital (SD), Multi-Media Card (MMC), Memory Stick (MS), Memory Stick Select (MS Select), Memory Stick Duo (with MS adapter), Memory Stick Pro, and Memory Stick Pro Duo (with MS Pro adapter). The built-in memory card reader is not only convenient, but also faster than most other forms of memory card readers because it utilizes the high-bandwidth PCI bus. More information is provided in section 4 of this manual.

IMPORTANT! Never remove cards while or immediately after reading, copying, formatting, or deleting data on the card or else data loss may occur.

PC Card Slot

One PCMCIA 2.1 compliant PC Card socket is available to support one type I/II PC card. The socket supports 32-bit CardBus. This allows accommodation of Notebook PC expansion options such as memory cards, ISDN, SCSI, Smart Cards, and wireless network adapters.

SIR Port (Standard Infrared)

The **standard** infrared (IrDA) communication port allows convenient wireless data communication with infrared-equipped devices or computers. This allows easy wireless synchronization with PDAs or mobile phones and even wireless printing. If your office supports IrDA networking, you can have wireless connection to a network anywhere provided there is a direct line of sight to an IrDA node.

1394 Port

IEEE1394 is a high speed serial bus like SCSI but has simple connections and hot-plugging capabilities like USB. The interface IEEE1394 has a bandwidth of 100-400 Mbits/sec and can handle up to 63 units on the same bus. IEEE1394 is also used in high-end digital equipment and should be marked “DV” for Digital Video port.

Headphone Output Jack (Phone Out)

The stereo headphone jack (1/8 inch) is used to connect the Notebook PC's audio out signal to amplified speakers or headphones. Using this jack automatically disables the built-in speakers.

Microphone Input Jack (Mic In)

The mono microphone jack (1/8 inch) can be used to connect an external microphone or output signals from audio devices. Using this jack automatically disables the built-in microphone. Use this feature for video conferencing, voice narrations, or simple audio recordings.

Audio Input Jack (Audio In)

The stereo input jack (1/8 inch) can be used to connect a stereo audio source to the Notebook PC. This feature is used mainly to add audio to multimedia applications.

LAN Port (100/10)

The RJ-45 LAN port supports an RJ-45 Ethernet cable. The internal LAN supports 100/10Base-TX standards. The built-in RJ45 port allows convenient use without a dongle.

Modem Port

The RJ-11 telephone port supports an RJ-11 telephone cable. The internal modem supports up to 56K V.90 transfers. The built-in connector allows convenient use without a dongle.

IMPORTANT! The built-in modem does not support the voltage used in digital phone systems. Do not connect the modem port to a digital phone system or else damage will occur to the Notebook PC.

Left Side

Refer to the diagram below to identify the components on this side of the Notebook PC.

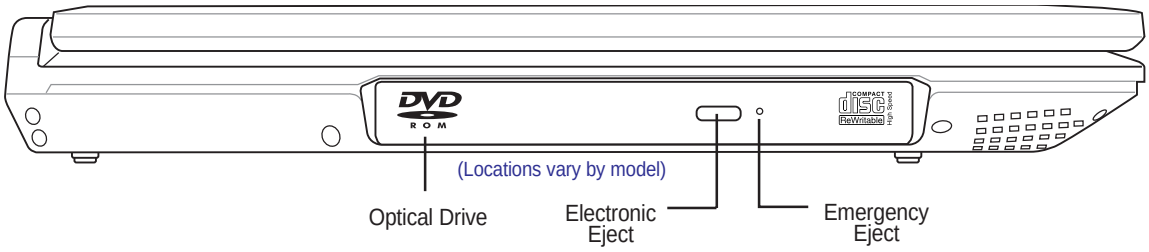

Optical Drive

The Notebook PC comes in various models with different optical drives. The Notebook PC's optical drive may support compact discs (CD) and/or digital video discs (DVD) and may have recordable (R) or re-writable (RW) capabilities. See the marketing specifications for details on each model.

Electronic Eject, Emergency Eject

The optical drive eject has an electronic eject button for opening the tray. You can also eject the optical drive tray through any software player or by right clicking the optical drive in Windows™ "My Computer." The emergency eject is used to eject the optical drive tray in case the electronic eject does not work. Do not use the emergency eject in place of the electronic eject. The activity LED (not available on some models) lights in proportion to the data transferred between the Notebook PC and optical disc.

Front Side

Refer to the diagram below to identify the components on the front side of the Notebook PC.

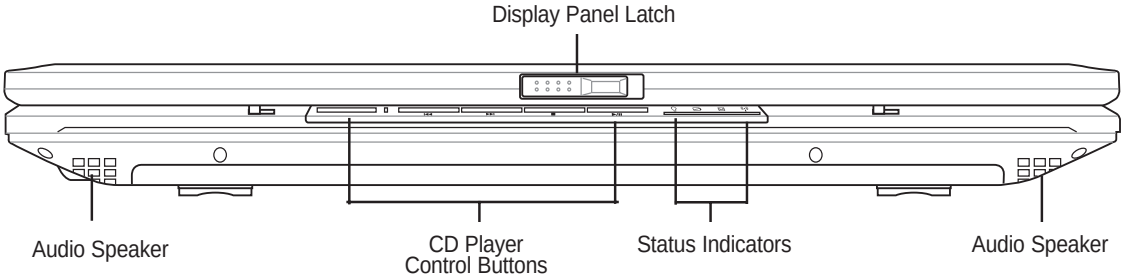

Audio Speakers

The built-in speaker allows you to hear audio without additional attachments. The multimedia sound system features an integrated digital audio controller that produces rich, vibrant sound (results improved with external stereo headphones or speakers). All audio features are software controlled.

Status Indicators

Status indicator details are described in section 3.

Rear Side

Refer to the diagram below to identify the components on this side of the Notebook PC.

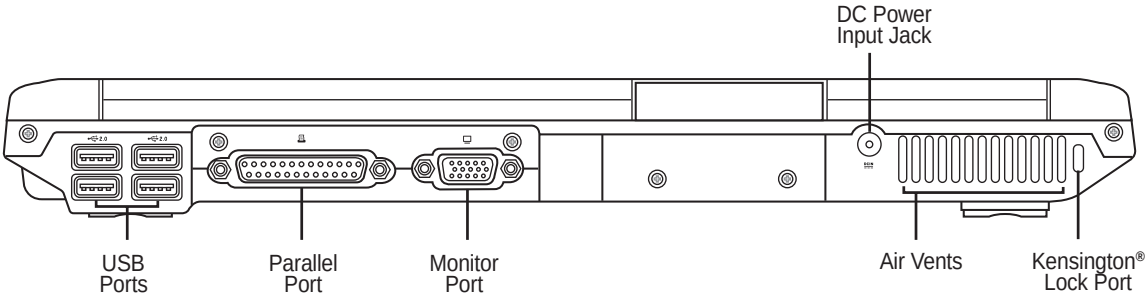

USB Port (2.0/1.1)

The Universal Serial Bus is compatible with USB 2.0 or USB 1.1 devices such as keyboards, pointing devices, video cameras, modems, hard disk drives, printers, monitors, and scanners connected in a series up to 12Mbits/sec (USB 1.1) and 480Mbits/sec (USB 2.0). USB allows many devices to run simultaneously on a single computer, with peripherals such as USB keyboards and some newer monitors acting as additional plug-in sites or hubs. USB supports hot-swapping of devices so that peripherals can be connected or disconnected without restarting the computer.

Parallel Port

The 25-pin D-sub parallel/printer port supports native parallel devices such as laser/inkjet printers, or parallel-adapted device such as external hard drives, removable drives, or scanners.

Display (Monitor) Output

The 15-pin D-sub monitor port supports a standard VGA-compatible device such as a monitor or projector to allow viewing on a larger external display.

Power (DC) Input

The supplied power adapter converts AC power to DC power for use with this jack. Power supplied through this jack supplies power to the Notebook PC and charges the internal battery pack. To prevent damage to the Notebook PC and battery pack, always use the supplied power adapter.

Kensington® Lock Port

The Kensington® lock port allows the Notebook PC to be secured using Kensington® compatible Notebook PC security products. These security products usually include a metal cable and lock that prevent the Notebook PC to be removed from a fixed object. Some security products may also include a motion detector to sound an alarm when moved.

3. Getting Started

Using the Battery Pack
Operating Systems
Power Connection
Powering ON The Notebook PC
Power Management
Restarting or Rebooting
Powering OFF The Notebook PC
Using the Keyboard
Instant Launch Keys and Status Indicators

Using the Battery Pack

Installing and Removing the Battery Pack

Your Notebook PC may or may not have its battery pack installed. If your Notebook PC does not have its battery pack installed, use the following procedures to install the battery pack.

IMPORTANT! Never attempt to remove the battery pack while the Notebook PC is turned ON, as this may result in the loss of working data.

To install the battery pack:

1. Insert the battery pack as shown.
2. A spring lock will catch the battery pack.
3. Slide the battery lock to the lock position.

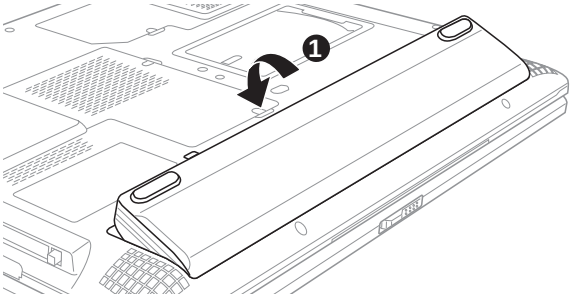

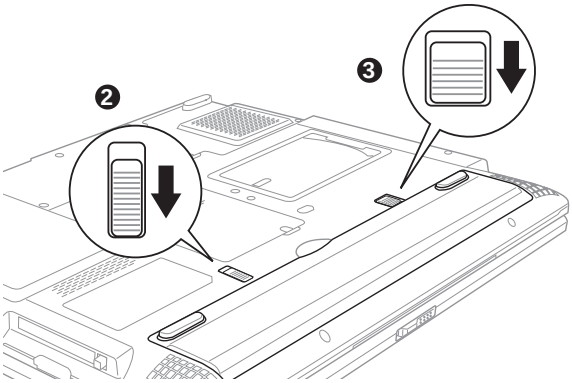

To remove the battery pack:

1. Slide the battery lock to the unlock position.
2. Slide the sping lock to unlock and hold.
3. Remove the battery pack.

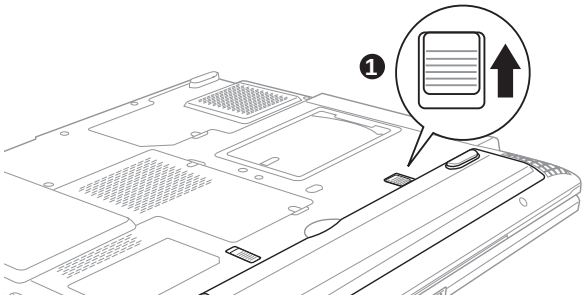

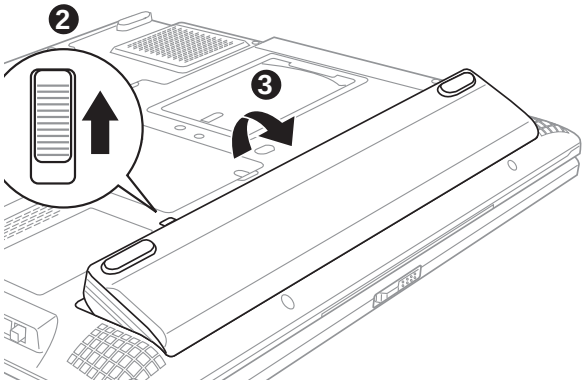

IMPORTANT! Only use battery packs and power adapters supplied with this Notebook PC or specifically approved by the manufacturer or retailer for use with this model or else damage may occur to the Notebook PC.

Charging the Battery Pack

Before you use your Notebook PC on the road, you will have to charge the battery pack. The battery pack begins to charge as soon as the Notebook PC is connected to external power. Fully charge the battery pack before using it for the first time. A new battery pack must completely charge before the Notebook PC is disconnected from external power. It takes a few hours to fully charge the battery when the Notebook PC is turned OFF and may take twice the time when the Notebook PC is turned ON. The battery charge light turns OFF when the battery pack is charged.

Battery Care

The Notebook PC's battery pack, like all rechargeable batteries, has a limit on the number times it can be recharged. Fully draining and charging the battery once a day every day will last over a year but how long beyond that will depend on your environment temperature, humidity, and how your Notebook PC is used. It is ideal that the battery be used in a temperature range between 10˚C and 29˚C (50˚F and 85˚F). You must also take into account that the Notebook PC's internal temperature is higher than the outside temperature. Any temperatures above or below this range will shorten the life of the battery. But in any case, the battery pack's usage time will eventually decrease and a new battery pack must be purchased from an authorized dealer for this Notebook PC. Because batteries also have a shelf life, it is not recommended to buy extras for storing.

Note: When the battery pack is not in use, you must fully charge it every three months.

Operating Systems

This Notebook PC may offer (depending on territory) its customers the choice of a pre-installed operating system such as **Microsoft Windows XP**. The choices and languages will depend on the territory. The levels of hardware and software support may vary depending on the installed operating system. The stability and compatibility of other operating systems cannot be guaranteed.

Support Software

This Notebook PC comes with a support CD that provides BIOS, drivers and applications to enable hardware features, extend functionality, help manage your Notebook PC, or add functionality not provided by the native operating system. If updates or replacement of the support CD is necessary, contact your dealer for web sites to download individual software drivers and utilities.

The support CD contains all drivers, utilities and software for all popular operating systems including those that have been pre-installed. The support CD does not include the operating system itself. The support CD is necessary even if your Notebook PC came pre-configured in order to provide additional software not included as part of the factory pre-install.

A recovery CD is optional and includes an image of the original operating system installed on the hard drive at the factory. The recovery CD provides a comprehensive recovery solution that quickly restores the Notebook PC's operating system to its original working state provided that your hard disk drive is in good working order. Contact your retailer if you require such a solution.

Power Connection

Your Notebook PC comes with a universal AC-DC adapter. That means that you may connect the power cord to any 100V-120V as well as 220V-240V outlets without setting switches or using power converters. Different countries may require that an adapter be used to connect the provided US-standard AC power cord to a different standard. Most hotels will provide universal outlets to support different power cords as well as voltages. It is always best to ask an experienced traveler about AC outlet voltages when bringing power adapters to another country.

TIP: You can buy travel kits for the Notebook PC that includes power and modem adapters for almost every country.

With the AC power cord connected to the AC-DC converter, connect the AC power cord to an AC outlet (preferably with surge-protection) and then connect the DC plug to the Notebook PC. Connecting the AC-DC adapter to the AC outlet first allows you to test the AC outlet's power and the AC-DC converter itself for compatibility problems before connecting the DC power to the Notebook PC. The green power LED on the adapter lights up if the power is within accepted ranges.

IMPORTANT! Damage may occur if you use a different adapter to power the Notebook PC or use the Notebook PC's adapter to power other electrical devices. If there is smoke, burning scent, or extreme heat coming from the AC-DC adapter, seek servicing. Seek servicing if you suspect a faulty AC-DC adapter. You may damage both your battery pack(s) and the Notebook PC with a faulty AC-DC adapter.

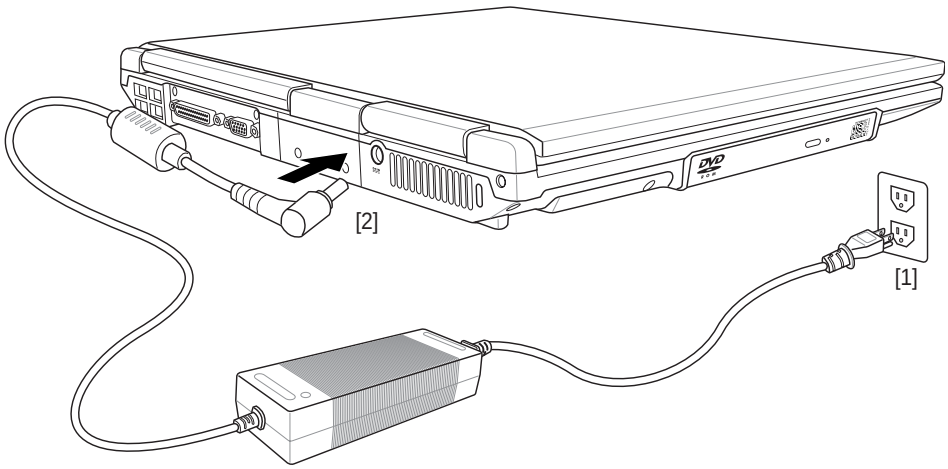

NOTE: This Notebook PC may come with either a two or three-prong plug depending on territory. If a three-prong plug is provided, you must use a grounded AC outlet or use a properly grounded adapter to ensure safe operation of the Notebook PC.

Powering ON The Notebook PC

The Notebook PC's power-ON message appears on the screen when you turn it ON. If necessary, you may adjust the brightness by using the hot keys. If you need to run the BIOS Setup to set or modify the system configuration, press [F2] upon bootup to enter the BIOS Setup. If you press [Tab] during the splash screen, standard boot information such as the BIOS version can be seen. Press [ESC] and you will be presented with a boot menu with selections to boot from your available drives.

IMPORTANT! Never turn OFF or reset your Notebook PC while the hard disk or floppy disk is in use and the activity LED is flashing; doing so can result in loss or destruction of your data. To protect the hard disk drive, always wait at least 5 seconds after turning OFF your Notebook PC before turning it back ON.

NOTE: Before bootup, the display panel flashes when the power is turned ON. This is part of the Notebook PC's test routine and is not a problem with the display.

The Power-On Self Test (POST)

When you turn ON the Notebook PC, it will first run through a series of software-controlled diagnostic tests called the Power-On Self Test (POST). The software that controls the POST is installed as a permanent part of the Notebook PC's architecture. The POST includes a record of the Notebook PC's hardware configuration, which is used to make a diagnostic check of the system. This record is created by using the BIOS Setup program. If the POST discovers a difference between the record and the existing hardware, it will display a message on the screen prompting you to correct the conflict by running BIOS Setup. In most cases the record should be correct when you receive the Notebook PC. When the test is finished, you may get a message reporting "No operating system found" if the hard disk was not preloaded with an operating system. This indicates that the hard disk is correctly detected and ready for the installation of a new operating system.

The S.M.A.R.T. (Self Monitoring and Reporting Technology) checks the hard disk drive during POST and gives a warning message if the hard disk drive requires servicing. If any critical hard disk drive warning is given during bootup, backup your data immediately and run Windows disk checking program. To run Window's disk checking program: (1) right-click any hard disk drive icon in "My Computer", (2) choose Properties, (3) click the Tools tab, (4) click Check Now, (5) select a hard disk drive, (6) select Thorough to also check for physical damages, and (7) click Start. Third party disk utilities such as Symantec's Norton Disk Doctor can also perform the same functions but with greater ease and more features.

IMPORTANT! If warnings are still given during bootup after running a software disk checking utility, you should take your Notebook PC in for servicing. Continued use may result in data loss.

Power Management - “Stand By” & “Hibernate”

Power management settings can be found in the Windows control panel. The following shows the power options properties in Windows. You can define “Stand By” or “Shut down” for closing the display panel, pressing the power button, or activating sleep mode. “Stand by” and “Hibernate” saves power when your Notebook PC is not in use by turning OFF certain components. When you resume your work, your last status (such as a document scrolled down half way or email typed half way will reappear as if you never left. “Shut down” will close all applications and ask if you want to save your work if any are not saved.

“Stand by” is the same as Suspend-to-RAM (STR). This function stores your current data and status in RAM while many components are turned OFF. Because RAM is volatile, it requires power to keep (refresh) the data. To operate: select “Start” | “Shut down”, and “Stand by”.

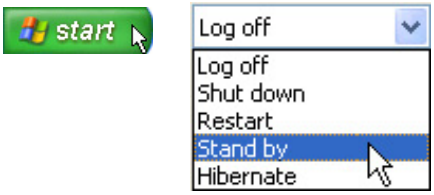

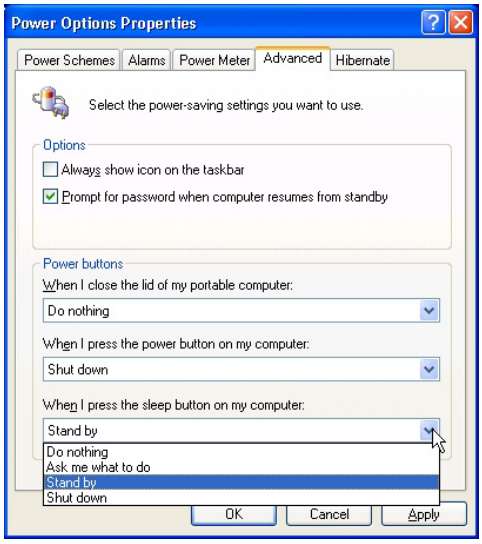

“Hibernate” is the same as Suspend-to-Disk (STD) and stores your current data and status on the hard disk drive. By doing this, RAM does not have to be periodically refreshed and power consumption is greatly reduced but not completely eliminated because certain wake-up components like LAN and modem needs to remain powered. “Hibernate” saves more power compared to “Stand by”. To operate: Enable hibernation in “Power Options” and select “Start” | “Shut down”, and “Hibernate”.

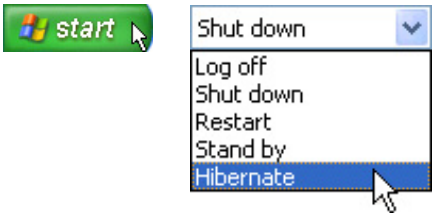

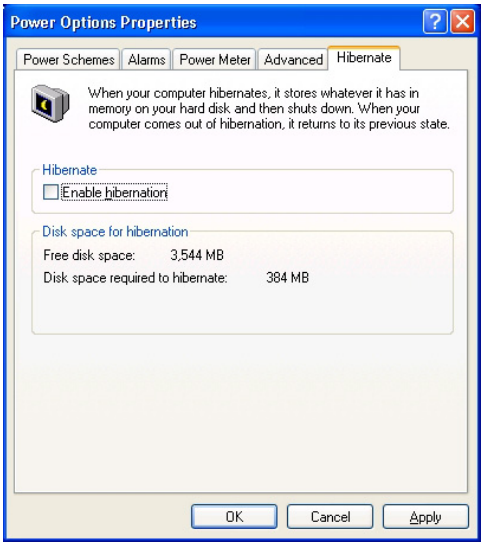

Restarting or Rebooting

After making changes to your operating system, you may be prompted to restart the system. Some installation processes will provide a dialog box to allow restart. To restart the system manually:

Click the **Start** button and select **Shut Down** | and choose **Restart**.

In case the operating system hangs (stops, freezes, crashes), try a “warm boot” by pressing [Ctrl][Alt][Del] keys simultaneously. (You may try a few times if there is no response.)

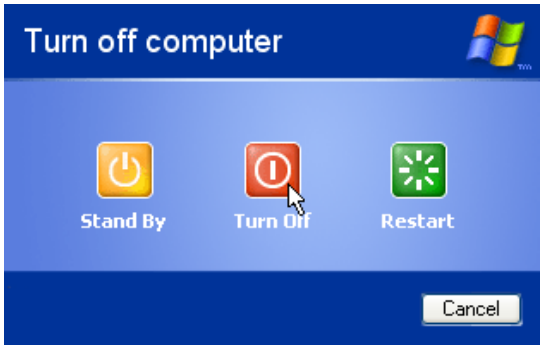

The screens are different depending on your security settings.

Powering OFF the Notebook PC

In Windows XP, the Notebook PC can be powered OFF by using **Start | Shut Down... | Turn off (or Shut down)**. For operating systems without proper power management (DOS, Windows NT), you must power OFF the Notebook PC by holding the power switch for 2 seconds (as opposed to 1 second to power ON) after closing applications and exiting operating systems. Holding the power switch for 2 seconds is necessary in order to prevent accidental power-OFFs.

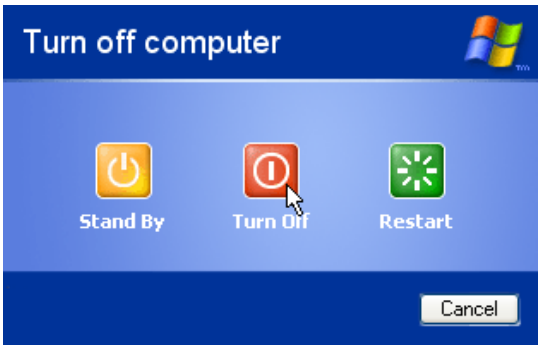

The screens are different depending on your security settings.

Emergency Shutdown

In case your operating system cannot properly turn OFF or restart, there are two additional ways to shutdown your Notebook PC:

(1) Hold the power button over 4 seconds, or (2) Press the shutdown button .

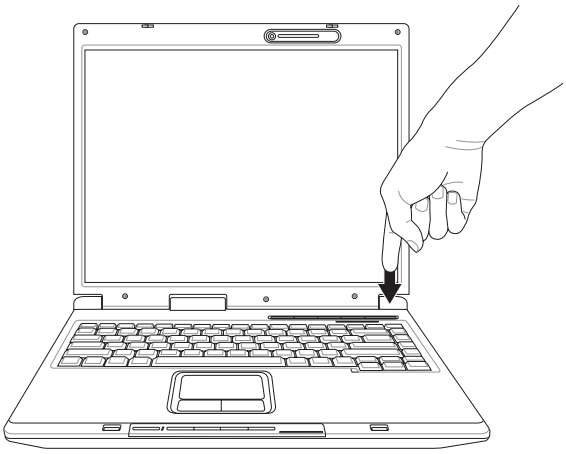

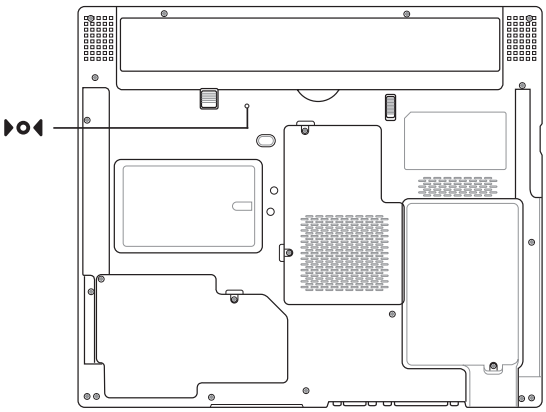

TIP: Use a straightened paper clip to press the shutdown button.

Using the Keyboard

Colored Hot Keys

The following defines the colored hot keys on the Notebook PC's keyboard. The colored commands can only be accessed by first pressing and holding the function key while pressing a key with a colored command.

NOTE: The Hot Key locations on the function keys may vary depending on model but the functions should remain the same. Follow the icons instead of the function keys.

"Z" Icon (F1): Places the Notebook PC in suspend mode (either Save-to-RAM or Save-to-Disk depending on sleep button setting in power management setup).

(F2): Wireless Models Only: Toggles the internal wireless LAN ON and OFF. When enabled, the wireless LAN LED will light. Windows software settings are necessary to use the wireless LAN.

Filled Sun Icon (F5):
Decreases the display brightness

Open Sun Icon (F6):
Increases the display brightness

LCD Icon (F7): Toggles the display panel ON and OFF. This also stretches your screen area (on certain models) to fill the entire display when using low resolution modes.

LCD/Monitor Icons (F8): Toggles between the Notebook PC's LCD display and an external monitor in this series: Notebook PC LCD -> External Monitor -> Both. (This function does not work in 256 Colors, select High Color in Display Property Settings.) **IMPORTANT: Connect an external monitor before booting up the Notebook PC.**

Speaker Icons (F10):
Toggles the speakers ON and OFF (only in Windows OS)

Down Speaker Icon (F11):
Decreases the speaker volume (only in Windows OS)

Up Speaker Icon (F12):
Increases the speaker volume (only in Windows OS)

Num Lk (Ins): Toggles the numeric keypad (number lock) ON and OFF. Allows you to use a larger portion of the keyboard for number entering.

Scr Lk (Del): Toggles the "Scroll Lock" ON and OFF. Allows you to use a larger portion of the keyboard for cell navigation.

Microsoft Windows™ Keys

There are two special Windows™ keys on the keyboard as described below.

The key with the Windows™ Logo activates the Start menu located at the bottom left of the Windows™ desktop.

The other key, that looks like a Windows™ menu with a small cursor, activates the properties menu and is equivalent to pressing the right mouse button on a Windows™ object.

Keyboard as a Numeric Keypad

The numeric keypad is embedded in the keyboard and consists of 15 keys that make number intensive input more convenient. These dual-purpose keys are labeled in orange on the key caps. Numeric assignments are located at the upper right hand corner of each key as shown in the figure. When the numeric keypad is engaged by pressing , the number lock LED lights up. If an external keyboard is connected, pressing the on the external keyboard enables/disables the NumLock on both keyboards simultaneously. To disable the numeric keypad while keeping the keypad on an external keyboard activated, press the keys on the Notebook PC.

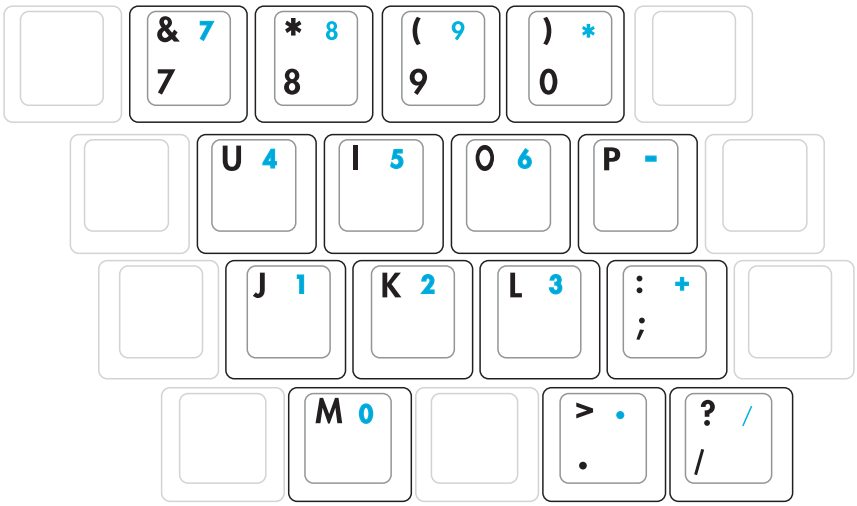

NOTE: The large bold characters and symbols are printed here for your reference. They are not labeled on the keyboard as shown here.

Keyboard as Cursors

The keyboard can be used as cursors while Number Lock is ON or OFF in order to increase navigation ease while entering numeric data in spreadsheets or similar applications.

With Number Lock OFF, press and one of the cursor keys shown below. For example [Fn][8] for up, [Fn][K] for down, [Fn][U] for left, and [Fn][O] for right.

With Number Lock ON, use [Shift] and one of the cursor keys shown below. For example [Shift][8] for up, [Shift][K] for down, [Shift][U] for left, and [Shift][O] for right.

NOTE: The large bold characters and symbols are printed here for your reference. They are not labeled on the keyboard as shown here.

Instant Launch Keys and Status Indicators

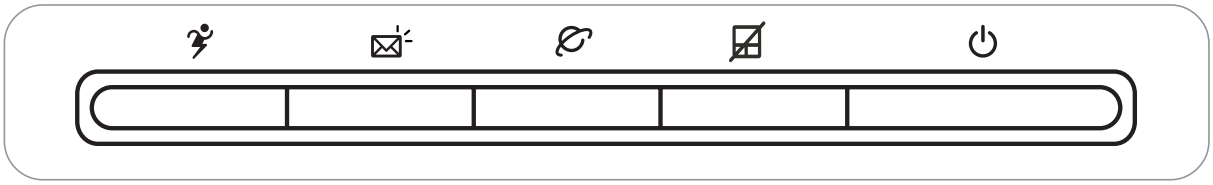

Instant Launch Keys

Power4 Gear+ Key

The Power4 Gear+ button toggles power savings between various power saving modes. The power saving modes control many aspects of the Notebook PC to maximize performance versus battery time during various events.

Email Launch Key

Pressing this button will launch your Email application while Windows is running.

Internet Launch Key

Pressing this button will launch your Internet browser application while Windows is running.

Pad-Lock Key

Pressing this button will lock your touchpad when using an external mouse. Locking the touchpad will prevent you from accidentally moving the cursor while typing. To enable the touchpad, simply press this button again.

Power4 Gear+ Modes

When you are using an AC power adapter, Power4 Gear+ will switch between three modes in the AC power mode segment. When you remove the AC adapter, Power4 Gear+ will switch between seven modes in the battery (DC) mode segment. When you remove or apply the AC adapter, Power4 Gear+ will automatically shift you up or down into the proper mode segment (AC or DC).

Taskbar Icons								
Mode Names	Super Performance	High Performance	Game Performance	DVD Movie Performance	Email/Office Performance	Presentation Performance	Audio Listening Performance	Battery-Saving Performance
Power Segment	AC	AC/DC	AC/DC	DC	DC	DC	DC	DC

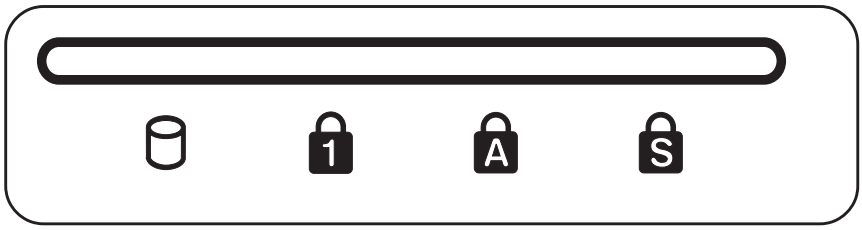

Status Indicators (above keyboard)

Drive Activity Indicator

Indicates that the Notebook PC is accessing one or more storage device(s) such as the hard disk. The light flashes proportional to the access time.

Number Lock

Indicates that number lock [Num Lk] is activated when lighted. Number lock allows some of the keyboard letters to act as numbers for easier numeric data input.

Capital Lock

Indicates that capital lock [Caps Lock] is activated when lighted. Capital lock allows some of the keyboard letters to type using capitalized letters (e.g. A, B, C). When the capital lock light is OFF, the typed letters will be in the lower case form (e.g. a,b,c).

Scroll Lock

Indicates that scroll lock [Scr Lk] is activated when lit. Scroll lock allows some of the keyboard letters to act as direction keys in order to allow easier navigation when only a part of the keyboard is required, such as for playing games.

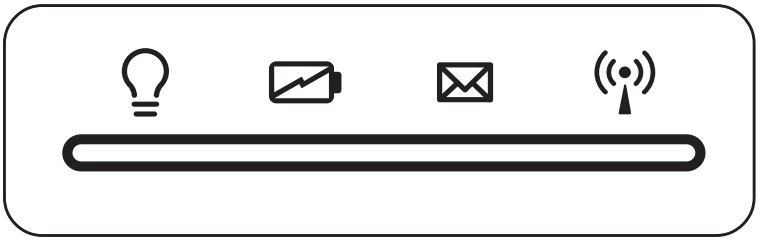

Status Indicators (front edge)

Power Indicator

The green LED lights to indicate that the Notebook PC is turned ON and blink when the Notebook PC is in the Suspend-to-RAM (Standby) mode. This LED is OFF when the Notebook PC is OFF or in the Suspend-to-Disk (Hibernation) mode.

Battery Charge Indicator

The battery charge indicator is an LED that shows the status of the battery's power as follows:

ON: The Notebook PC's battery is charging

Off: The Notebook PC's battery is charged or completely drained

Email Indicator

Flashes when there is one or more new email(s) in your email program's inbox. This function requires software setup and may not be currently configured on your Notebook PC. This function is designed for Microsoft email software only and may not work with email software from other companies.

Wireless LAN Indicator (Optional)

This indicator is only applicable on models with internal wireless LAN. When the internal wireless LAN is enabled, this indicator will light. (Windows software settings are necessary to use the wireless LAN.)

CD Player Control Buttons and Indicator

There are several CD control buttons integrated externally on the Notebook PC for convenient CD playing. The buttons activate and control your operating system's audio player when the Notebook PC is ON. When your Notebook PC is OFF, the CD control buttons activate a CD player function that allows you to listen to audio CDs even while the Notebook PC is not turned ON. The following defines the meaning of each CD control button and indicator on the front of the Notebook PC.

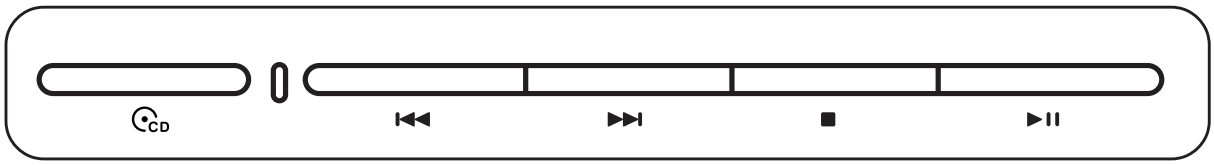

CD Power Switch

While the Notebook PC is OFF: Turns ON or OFF the CD player.

CD Player Power Indicator (front side)

While the Notebook PC is OFF: This LED lights when the CD player is turned ON (by using the "CD Power Switch").

CD Skip to Previous Track (Rewind) & Audio Volume Down

During CD play, this button has two functions:

Track: The first push will restart the current track. The second push will skip to the **previous** track.

Audio: Hold down to **decrease** audio volume.

CD Skip to Next Track (Fast Forward) & Audio Volume Up

During CD play, this button has two functions:

Track: Push once to skip to the **next** track during CD playing.

Audio: Hold down to **increase** audio volume.

CD Stop

During CD play: Stops CD play.

CD Play/Pause

During CD stop, begins CD play.

During CD play, pauses CD play.

Audio Volume Controls

Fn + Speaker Icons (F10):	Toggles the audio volume ON and OFF
Fn + Down Speaker Icon (F11):	Decreases the audio volume
Fn + Up Speaker Icon (F12):	Increases the audio volume

4. Using the Notebook PC

Pointing Device
Optical Drive
Flash Memory Card Reader
PC Card (PCMCIA) Socket
Modem and Network Connections
IR Wireless Communication
AC Power System
Battery Power System
Power Management Modes
Notebook PC Upgrades

Pointing Device

The Notebook PC's integrated touchpad pointing device is fully compatible with all two/three-button and scrolling knob PS/2 mice. The touchpad is pressure sensitive and contains no moving parts; therefore, mechanical failures can be avoided. A device driver is still required for working with some application software.

IMPORTANT! Do not use any objects in place of your finger to operate the touchpad or else damage may occur to the touchpad's surface.

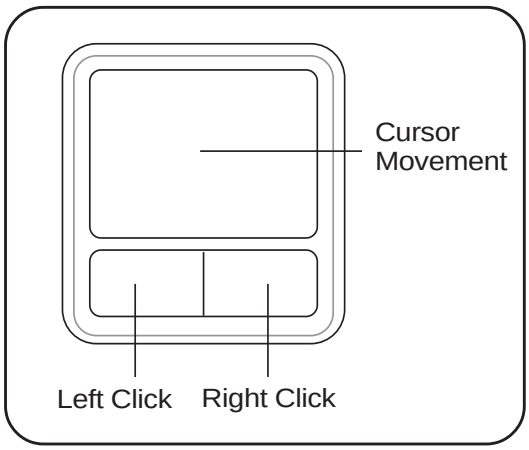

Using the Touchpad

Light pressure with the tip of your finger is all that is required to operate the touchpad. Because the touchpad is electrostatic sensitive, objects cannot be used in place of your fingers. The touchpad's primary function is to move the cursor around or select items displayed on the screen with the use of your fingertip. The following illustrations demonstrate proper use of the touchpad.

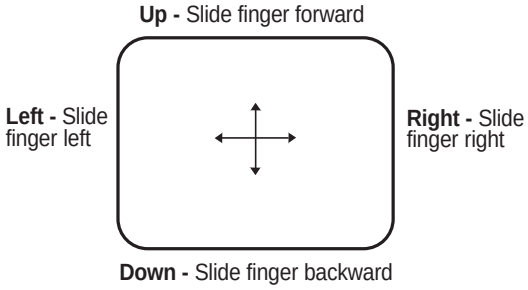

Moving The Cursor

Place your finger in the center of the touchpad and slide in a direction to move the cursor.

Touchpad Usage Illustrations

Clicking/Tapping - With the cursor over an item, press the left button or use your fingertip to touch the touchpad lightly, keeping your finger on the touchpad until the item is selected. The selected item will change color. The following 2 examples produce the same results.

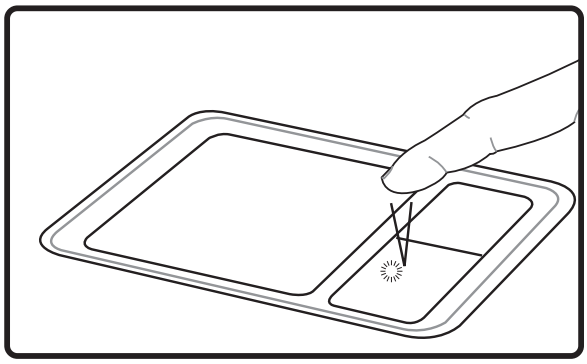

Clicking
(press the left cursor button and release)

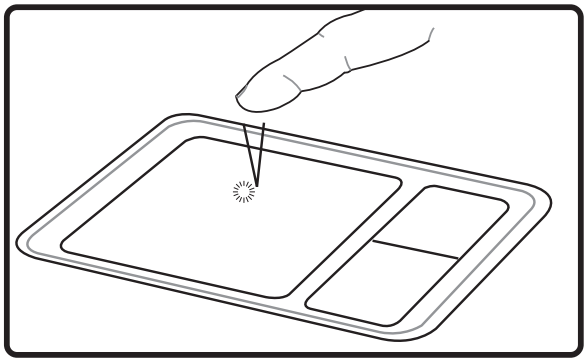

Tapping
(lightly but rapidly strike the touchpad)

Double-clicking/Double-tapping - This is a common skill for launching a program directly from the corresponding icon you select. Move the cursor over the icon you wish to execute, press the left button or tap the pad twice in rapid succession, and the system launches the corresponding program. If the interval between the clicks or taps is too long, the operation will not be executed. You can set the double-click speed using the Windows Control Panel "Mouse." The following 2 examples produce the same results.

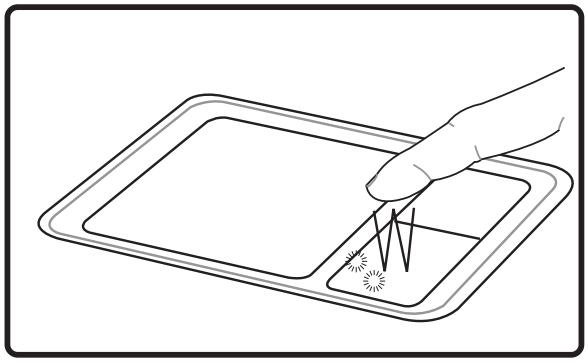

Double-Clicking
(press the left button twice and release)

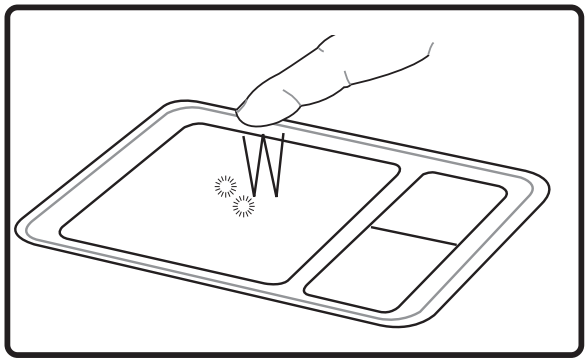

Double-Tapping
(lightly but rapidly strike the touchpad twice)

Dragging - Dragging means to pick up an item and place it anywhere on the screen you wish. You can move the cursor over the item you select, and while keeping the left button depressed, moving the cursor to the desired location, then release the button. Or, you can simply double-tap on the item and hold while dragging the item with your fingertip. The following 2 examples produce the same results.

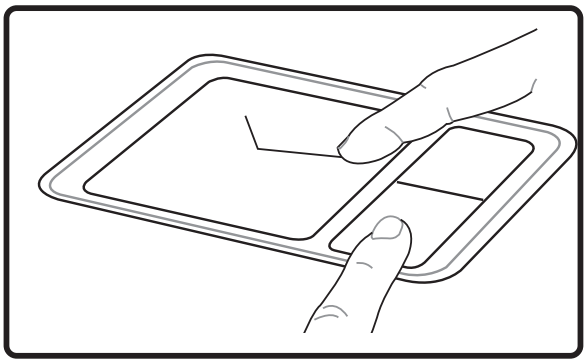

Dragging-Clicking

(hold left button and slide finger on touchpad)

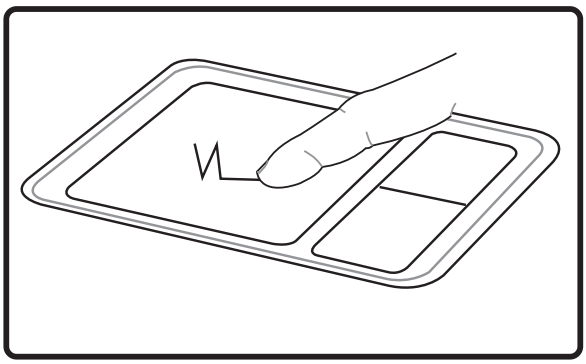

Dragging-Tapping

(lightly strike the touchpad twice, sliding finger on touchpad during second strike)

NOTE: A software-controlled scrolling function is available after setting up the included touchpad utility to allow easy Windows or web navigation. Basic functions can be adjusted at the Windows control panel to allow comfortable clicking and tapping.

Caring for the Touchpad

The touchpad is pressure sensitive. If not properly cared for, it can be easily damaged. Take note of the following precautions.

- Make sure the touchpad does not come into contact with dirt, liquids or grease.
- Do not touch the touchpad if your fingers are dirty or wet.
- Do not rest heavy objects on the touchpad or the touchpad buttons.
- Do not scratch the touchpad with your finger nails or any hard objects.

NOTE: The touchpad responds to movement not to force. There is no need to tap the surface too hard. Tapping too hard does not increase the responsiveness of the touchpad. The touchpad responds best to light pressure.

Optical Drive

Inserting an optical disc

1. While the Notebook PC's power is ON, press the drive's eject button and the tray will eject out partially.

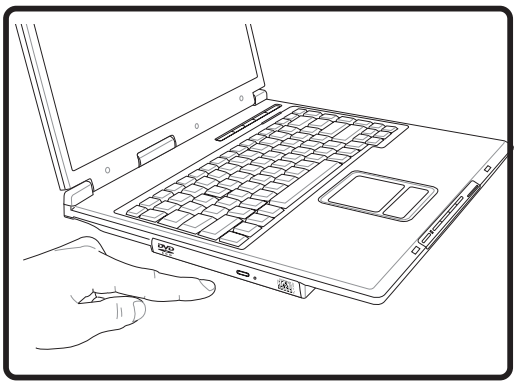

2. Gently pull on the drive's front panel and slide the tray completely out. Be careful not to touch the CD drive lens and other mechanisms. Make sure there are no obstructions that may get jammed under the drive's tray.

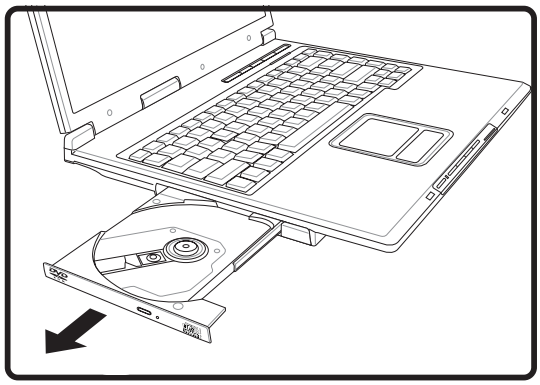

3. Hold the disc by the edge and face the disc's printed side up. Push down on both sides of the disc's center until the disc snaps onto the hub. **The hub should be higher than the disc when correctly mounted.**

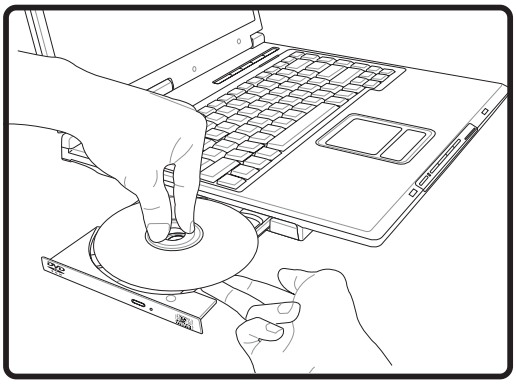

4. Slowly push the drive's tray back in. The drive will begin reading the table of contents (TOC) on the disc. When the drive stops, the disc is ready to be used.

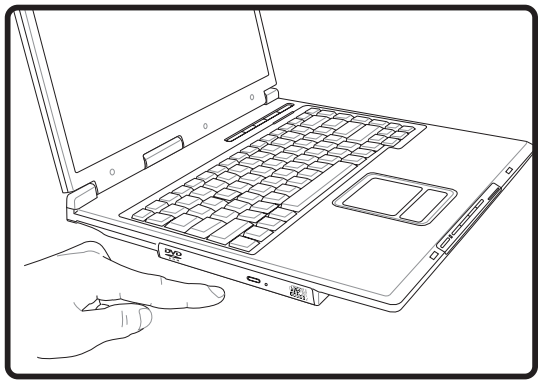

NOTE: It is normal to hear as well as feel the CD spinning with great intensity in the CD drive while data is read.

Optical Drive (Cont')

Removing an optical disc

1. While the Notebook PC's power is ON, press the drive's eject button and the tray will eject out partially.
2. Gently pry the edge of the disc upwards at an angle to remove the disc from the hub.

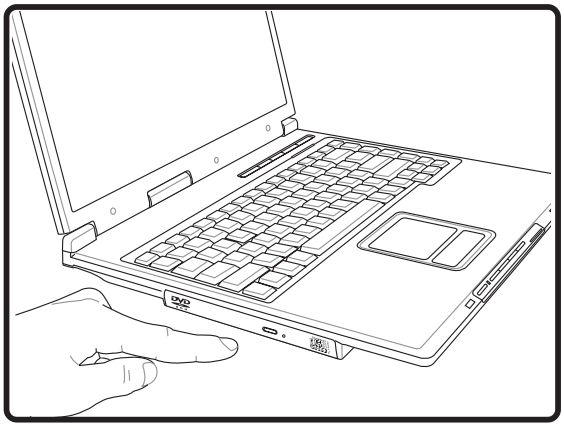

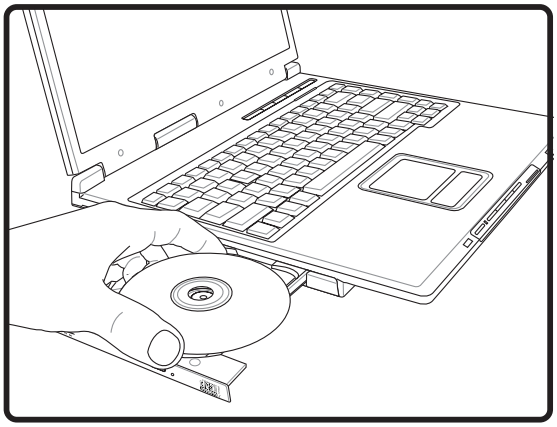

Using the Optical Drive

Optical discs and equipment must be handled with care because of the precise mechanics involved. Keep in mind the important safety instructions from your CD suppliers. Unlike desktop optical drives, the Notebook PC uses a hub to hold the CD in place regardless of the angle. When inserting a CD, it is important that the CD be pressed onto the center hub or else the optical drive tray will scratch the CD.

WARNING! If the CD disc is not properly locked onto the center hub, the CD can be damaged when the tray is closed. Always watch the CD closely while closing the tray slowly to prevent damage.

A CD drive letter should be present regardless of the presence of a CD disc in the drive. After the CD is properly inserted, data can be accessed just like with hard disk drives; except that nothing can be written to or changed on the CD. Using the proper software, a CD-RW drive or DVD+CD-RW drive can allow CD-RW discs to be used like a hard drive with writing, deleting, and editing capabilities.

Vibration is normal for all high-speed optical drives due to unbalanced CDs or CD print. To decrease vibration, use the Notebook PC on an even surface and do not place labels on the CD.

Listening to Audio CD

The optical drives can play audio CDs, but only the DVD-ROM drive can play DVD audio. Insert the audio CD and Windows™ automatically opens an audio player and begins playing. Depending on the DVD audio disc and installed software, it may require that you open a DVD player to listen to DVD audio. You can adjust the volume using hotkeys or Windows™ speaker icon on the taskbar.

PC Card (PCMCIA) Socket

The Notebook PC supports PC Cards (or sometimes referred to as PCMCIA cards) to allow expansion like PCI cards on desktop computers. This allows you to customize your Notebook PC to meet a wide range of application needs. The PCMCIA socket can interface with **type I or type II** PC cards. PC cards are about the size of a few stacked credit cards and have a 68-pin connector at one end. The PC Card standard accommodates a number of function, communication, and data storage expansion options. PC cards come in memory/flash cards, fax/modems, networking adapters, SCSI adapters, MPEG I/II decoder cards, Smart Cards, and even wireless modem or LAN cards. The Notebook PC supports PCMCIA 2.1, and 32-bit CardBus standards.

The three different PC Card standards actually have different thicknesses. Type I cards are 3.3mm, Type II cards are 5mm, and Type III cards are 10.5mm thick. Type I and Type II cards can be used in a single socket and Type III cards take up two sockets. **Type III cards are only supported on Notebook PC's with two PC card sockets.**

32-bit CardBus Support

CardBus support allows PC Cards and their hosts to use 32-bit bus mastering and operate at speeds of up to 33MHz, transferring data in burst modes comparable with PCI's 132MB/sec. By comparison, the standard 16-bit PC Card bus can handle only 20MB/sec. Since the Notebook PC is equipped with CardBus broader and faster data pathway, it can handle bandwidth-hungry operations, such as 100Mbps Fast Ethernet, Fast SCSI peripherals, and ISDN-based video conference. The CardBus peripherals support plug and play.

The CardBus socket is backward-compatible with 16-bit PC Cards serving at 5 volts operation while CardBus operates at 3.3 volts to reduce power consumption.

Inserting a PC Card (PCMCIA)

1. If there is a PC Card socket protector, remove it using the “Removing a PC Card” instructions below.
2. Insert the PC card with the connector side first and label side up. Standard PC cards will be flush with the Notebook PC when fully inserted.
3. Carefully connect any cables or adapters needed by the PC card. Usually connectors can only be inserted in one orientation. Look for a sticker, icon, or marking on one side of the connector representing the top side.

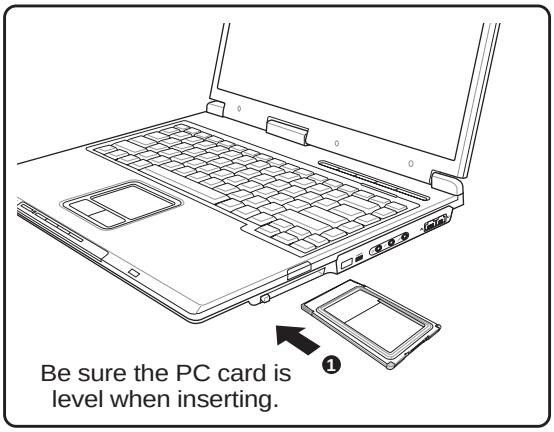

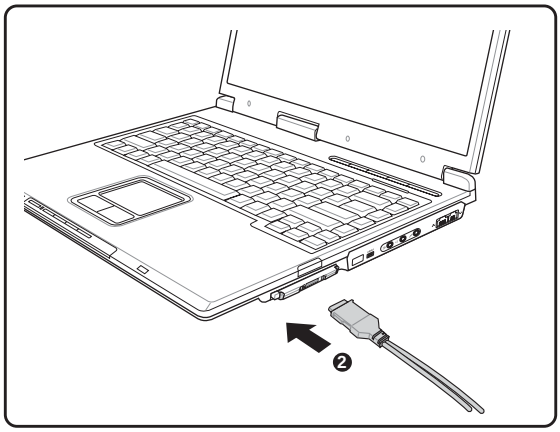

Removing a PC Card (PCMCIA)

To remove the PC card, first remove all cables or adapters attached to the PC card, then double-click the PC card icon on the Windows taskbar and stop the PC card you want to remove.

1. Press in the toggle eject button and release. The recessed spring loaded toggle button will extend when pushed in and released.
2. Press the extended button again to eject the PC Card. Carefully pull the ejected PC card out of the socket.

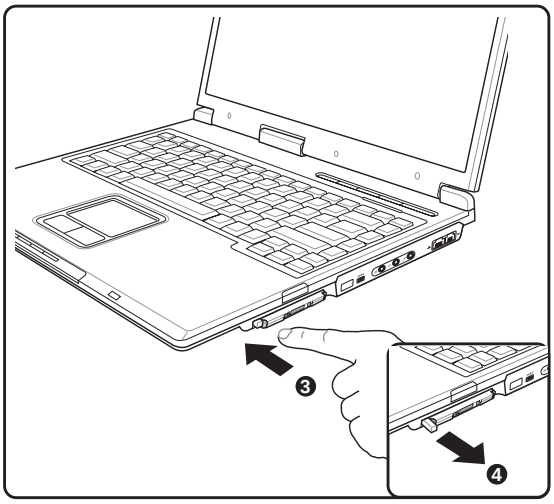

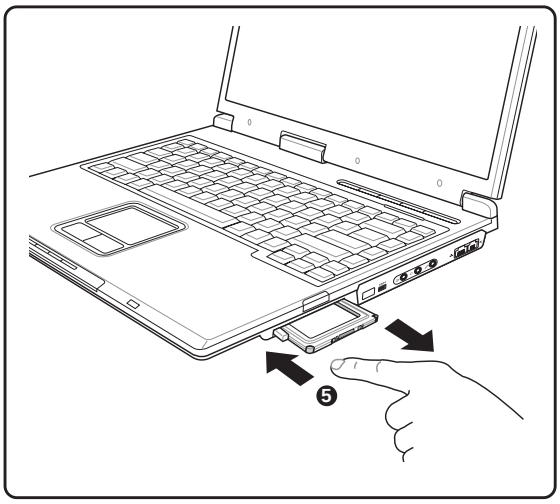

Flash Memory Card Reader

Normally a PCMCIA memory card reader must be purchased separately in order to use memory cards from devices such as digital cameras, MP3 players, mobile phones, and PDAs. This Notebook PC has a single built-in memory card reader that can read the following flash memory cards: Secure Digital (SD), Multi-Media Card (MMC), Memory Stick (MS), Memory Stick Select (MS Select), Memory Stick Duo (with MS adapter), Memory Stick Pro, and Memory Stick Pro Duo (with MS Pro adapter). Memory Sticks may be standard or with MagicGate technology. The built-in memory card reader is not only convenient, but also faster than most other forms of memory card readers because it utilizes the high-bandwidth PCI bus.

Supported Memory Types

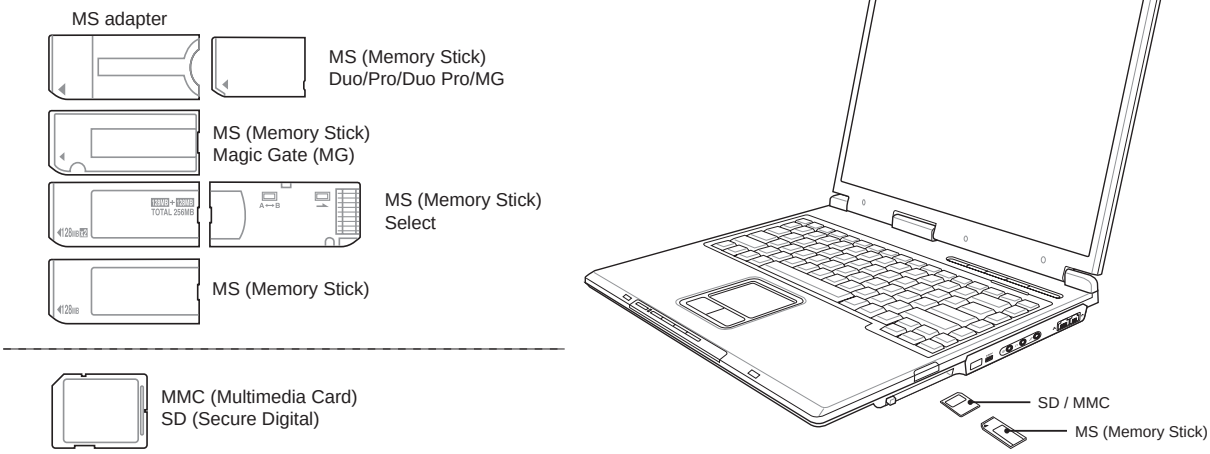

IMPORTANT! Never remove cards while or immediately after reading, copying, formatting, or deleting data on the card or else data loss may occur.

Modem and Network Connections

The built-in modem and network model comes with both an RJ-11 and an RJ-45 port. RJ-11 telephone cables have two or four wires and are used to connect telephones to telephone outlets found in the walls of residential homes and some commercial buildings (some commercial buildings may have telephone wiring designed for dedicated phone systems that may not be compatible). RJ-45 network cables are found connecting network computers to network hubs or switches usually found in business environments.

NOTE: The built-in modem and network cannot be installed later as an upgrade. Modem and/or network can be installed as a PC card (PCMCIA).

IMPORTANT! Only use analog telephone outlets. The built-in modem does not support the voltage used in digital phone systems. Do not connect the RJ-11 to digital phone systems found in many commercial buildings or else damage will occur!

Modem Connection

The telephone wire used to connect the Notebook PC's internal modem should have either two or four wires (only two wires (telephone line #1) is used by the modem) and should have an RJ-11 connector on both ends. Connect one end to the modem port and the other end to an analog telephone wall socket (the ones found in residential buildings). Once the driver is setup, the modem is ready to use.

NOTE: When you are connected to an online service, do not place the Notebook PC in suspend (or sleep mode) or else you will disconnect the modem connection.

WARNING! Only use analog telephone outlets. The built-in modem does not support the voltage used in digital phone systems. Do not connect the RJ-11 to digital phone systems found in many commercial buildings or else damage will occur!

CAUTION: For electrical safety concerns, only use telephone cables rated 26AWG or higher. (see Glossary for more information)

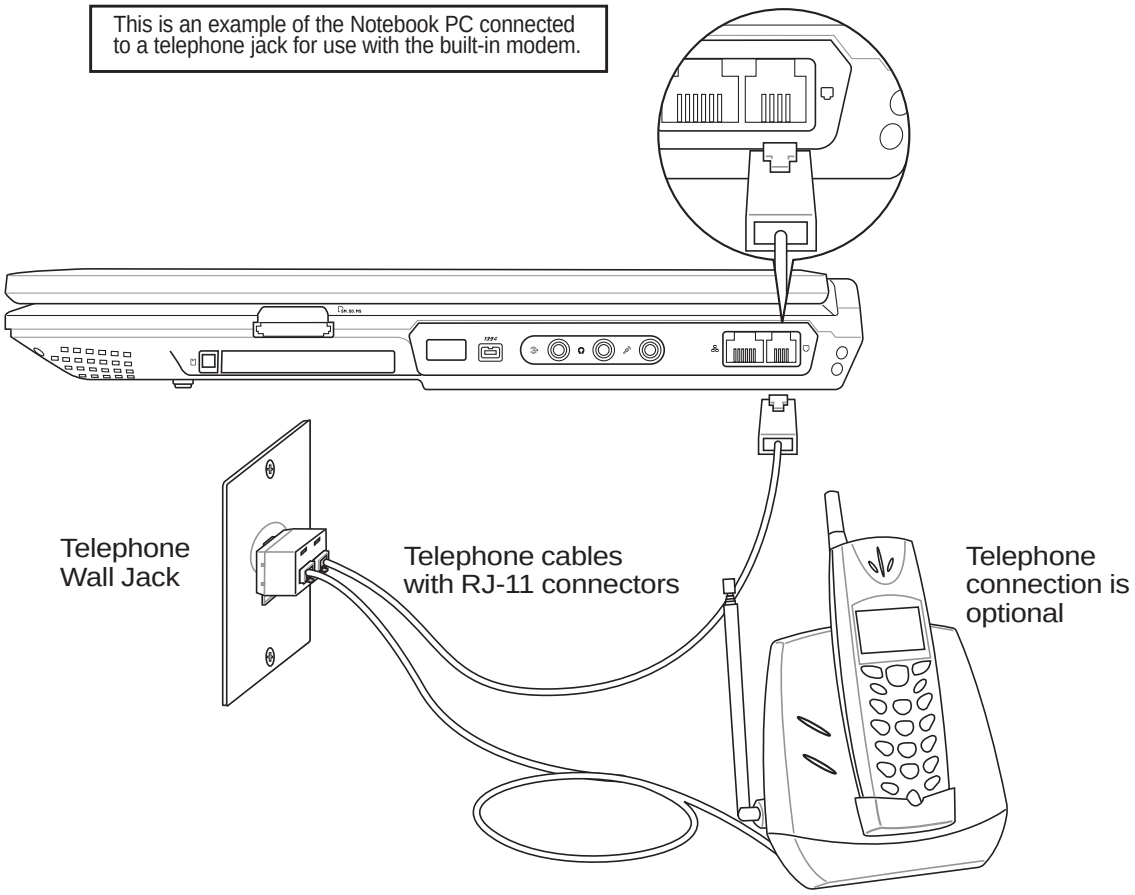

Network Connection (100/10 Base)

Connect a network cable, with RJ-45 connectors on each end, to the modem/network port on the Notebook PC and the other end to a hub or switch. For 100/10BASE-TX speeds, your network cable must be category 5 or better (not category 3) with twisted-pair wiring. If you plan on running the interface at 100/10Mbps, it must be connected to a 100/10BASE-TX hub (not a BASE-T4 hub). For 10Base-T, use category 3, 4, or 5 twisted-pair wiring. Duplex transfers (200/20Mbps) is supported on this Notebook PC but requires connection to a network switching hub with “duplex” enabled. The software default is to use the fastest setting so no user-intervention is required.

Twisted-Pair Cable

The cable used to connect the Ethernet card to a host (generally a Hub or Switch) is called a straight-through Twisted Pair Ethernet (TPE). The end connectors are called RJ-45 connectors, which are not compatible with RJ-11 telephone connectors. If connecting two computers together without a hub in between, auto-crossover is supported on this Notebook PC so a crossover LAN cable is not required.

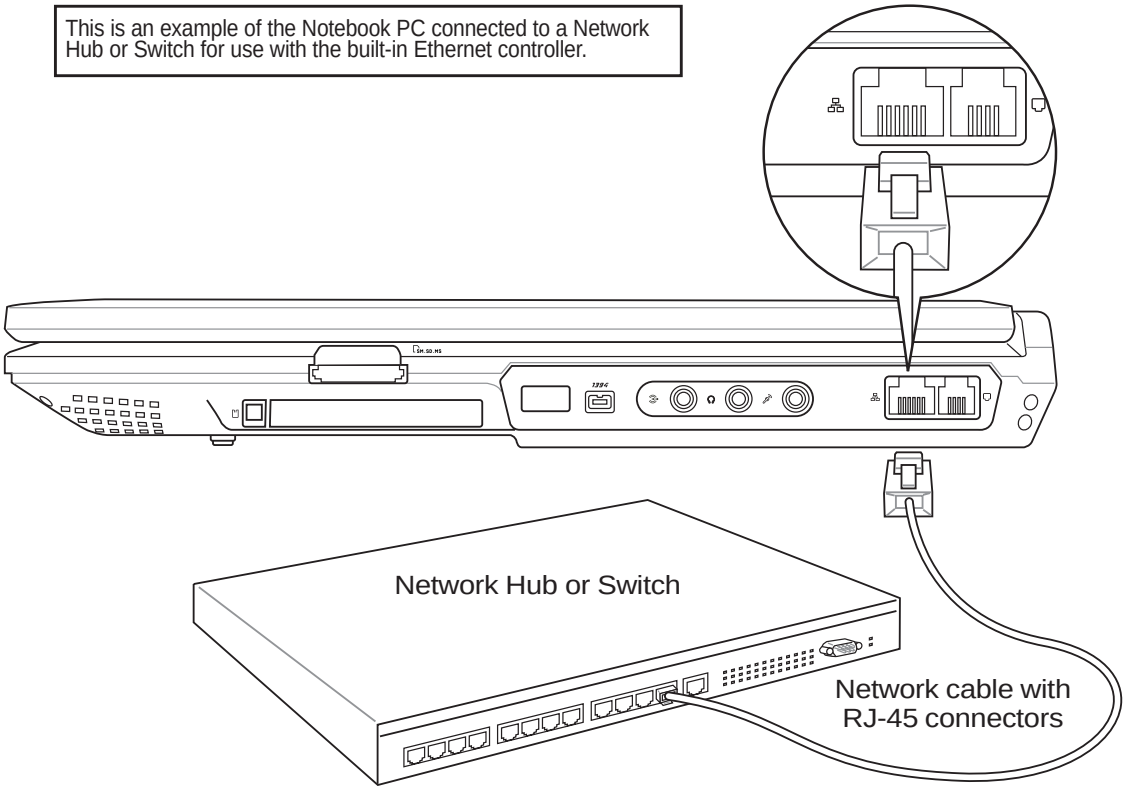

AC Power System

The Notebook PC power is comprised of two parts, the power adapter and the battery power system. The power adapter converts AC power from a wall outlet to the DC power required by the Notebook PC. The battery pack consists of a set of battery cells housed together. The AC Adapter's primary function is to provide power to the Notebook PC which also charges the battery pack. When the power adapter is connected to the Notebook PC, it provides power to the Notebook PC and charges the internal battery at the same time as long as it is plugged into an electrical outlet.

IMPORTANT! To protect your Notebook PC from damage, use only the power adapter that came with this Notebook PC because each power adapter has its own power output ratings.

Battery Power System

The Notebook PC is designed to work with a removable battery pack. A fully charged pack will provide several hours of battery life, which can be further extended by using power management features through the BIOS setup. The battery system implements the Smart Battery standard under the Windows environment, which allows the battery to accurately report the amount of charge percentage left in the battery. Additional battery packs are optional and can be purchased separately through a Notebook PC retailer. Before using the Notebook PC on battery power for the first time, check the battery icon in the Windows task bar to make sure that the battery is fully charged. Charging the battery takes a few hours when the Notebook PC is powered OFF.

Charging the Battery Pack

You can charge the battery pack by using the power adapter. When the power adapter is plugged in, the inserted battery pack automatically recharges whether your Notebook PC is ON or OFF. It takes a few hours to receive a full charge when the power is OFF but takes twice as long when the Notebook PC is in use. The battery is charging when the orange LED is solid. When the LED is OFF, the battery pack is charged.

NOTE: The battery stops charging if the temperature is too high or the battery voltage is too high. BIOS provides a smart battery refreshing function.

Using Battery Power

A fully-charged battery pack provides the Notebook PC a few hours of working power. But the actual figure varies depending on how you use the power saving features, your general work habits, the CPU, system memory size, and the size of the display panel.

Checking Battery Power

To check the remaining battery power, move your cursor over the power icon. The power icon is a "battery" when not using AC power and a "plug" when using AC power. Double click on the icon for more information and settings.

Move your mouse over the battery icon for remaining power information.

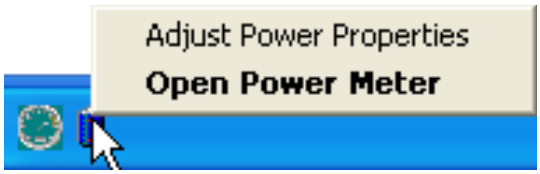

Right-click the battery icon for sub-menus.

Left-click the battery icon for power management settings.

When the AC power is connected, charging status will be shown.

NOTE: If you ignore the low battery warning, eventually the Notebook PC enters suspend mode (Windows default uses STR).

WARNING! Suspend-to-RAM (STR) does not last long when the battery power is depleted. Suspend-to-Disk (STD) is not the same as power OFF. STD requires a small amount of power and will fail if no power is available due to complete battery depletion or no power supply (e.g. removing both the power adapter and battery pack).

WARNING! Never attempt to remove the battery pack while the power is ON, or if the system has not yet entered into the suspend mode as this may result in the data loss.

Power Management Modes

The Notebook PC has a number of automatic or adjustable power saving features that you can use to maximize battery life and lower Total Cost of Ownership (TCO). You can control some of these features through the Power menu in the BIOS Setup. ACPI power management settings are made through the operating system. The power management features are designed to save as much electricity as possible by putting components into a low power consumption mode as often as possible but also allow full operation on demand. These low power modes are referred to as “Stand by” (or Suspend-to-RAM) and “Hibernation” mode or Suspend-to-Disk (STD). The Standby mode is a simple function provided by the operating system. When the Notebook PC is in either one of the power saving modes, the status will be shown by the following: “Stand by”: Power LED Blinks and “Hibernation”: Power LED OFF.

Full Power Mode & Maximum Performance

The Notebook PC operates in Full Power mode when the power management function is disabled by configuring Windows power management and SpeedStep. When the Notebook PC is operating in Full Power Mode, the Power LED remains ON. If you are conscious of both system performance and power consumption, select “Maximum Performance” instead of disabling all power management features.

ACPI

Advanced Configuration and Power Management (ACPI) was developed by Intel, Microsoft, and Toshiba especially for Windows and later to control power management and Plug and Play features. ACPI is the new standard in power management for Notebook PCs.

NOTE: APM was used in older operating systems like Windows NT4 and Windows 98. Because newer operating systems like Windows XP, Windows 2000, and Windows ME utilize ACPI, APM is no longer fully supported on this Notebook PC.

Suspend Mode

In “Stand by” (STR) and “Hibernation” (STD), the CPU clock is stopped and most of the Notebook PC devices are put in their lowest active state. The suspend mode is the lowest power state of the Notebook PC. The Notebook PC enters suspend mode when the system remains idle for a specified amount of time or manually using the [Fn][F1] keys. The Power LED blinks when the Notebook PC is in STR mode. In STD mode, the Notebook PC will appear to be powered OFF. **Recover from STR by pressing any keyboard button (except Fn). Recover from STD by using the power switch (just like powering ON the Notebook PC).**

Power Savings

In addition to reducing the CPU clock, this mode puts devices including the LCD backlight in their lower active state. The Notebook PC enters “Stand by” mode (low priority) when the system remains idle for a specified amount of time. The timeout can be set through Windows power management (higher priority). To resume system operation, press any key.

Power State Summary

STATE	ENTRY EVENT	EXIT EVENT
"Stand by"	• "Stand by" through Windows Start button, • Timer as set though "Power Management" in Windows Control Panel (higher priority)	• Any device • Battery low
STR ("Stand by") (Suspend-to-RAM)	• Hotkey [Fn][F1] --	• Signal from modem port • Power button • Any key
STD ("Hibernate") (Suspend-to-Disk)	• Hotkey [Fn][F1] --	• Power button • Battery Extremely Low
Soft OFF	• Power button (can be defined as STR or STD) • "Shut down" through Windows Start button	• Power button

Power4 Gear+ Modes

When you are using an AC power adapter, Power4 Gear+ will switch between three modes in the AC power mode segment. When you remove the AC adapter, Power4 Gear+ will switch between seven modes in the battery (DC) mode segment. When you remove or apply the AC adapter, Power4 Gear+ will automatically shift you up or down into the proper mode segment (AC or DC).

Taskbar Icons								
Mode Names	Super Performance	High Performance	Game Performance	DVD Movie Performance	Email/Office Performance	Presentation Performance	Audio Listening Performance	Battery-Saving Performance
Power Segment	AC	AC/DC	AC/DC	DC	DC	DC	DC	DC

Thermal Power Control

There are three power control methods for controlling the Notebook PC's thermal state. These power control cannot be configured by the user and should be known in case the Notebook PC should enter these states. The following temperatures represent the chassis temperature (not CPU).

- The fan turns ON for active cooling when the temperature reaches the safe upper limit.
- The CPU decreases speed for passive cooling when the temperature exceeds the safe upper limit.
- The system shut down for critical cooling when temperature exceeds the maximum safe upper limit.

Notebook PC Upgrades

System Memory Expansion

Additional memory will increase application performance by decreasing hard disk access. This is more noticeable on newer software that require more and more system resources. The BIOS automatically detects the amount of memory in the system and configures CMOS accordingly during the POST (Power-On-Self-Test) process. There is no hardware or software (including BIOS) setup required after the memory is installed. Only purchase expansion modules from authorized retailers of this Notebook PC to ensure maximum compatibility and reliability. Visit an authorized service center or retailer for information on memory upgrades for your Notebook PC.

Hard Disk Drive Upgrades

Hard disk drives have higher capacities and operate at much faster speeds than floppy disk drives and CD-ROM drives. Enhanced IDE drives provide a reliable, fast, and cost-effective mass storage solution in the PC storage industry. The high speed transfer modes supported are UltraATA/100 up to 100MB/sec and PIO mode 4 up to 16.6MB/sec. The Notebook PC comes with a removable 2.5” (6.35cm) wide and .374” (.95cm) high UltraATA/100/66 IDE hard disk drive with current capacities up to **80GB**. Current IDE hard drives support S.M.A.R.T. (Self Monitoring and Reporting Technology) to detect hard disk errors or failures before they happen. Visit an authorized service center or retailer for upgrades.

IMPORTANT! Poor handling of the Notebook PC may damage the hard disk drive. Handle the Notebook PC gently and keep it away from static electricity and strong vibrations or impact. The hard disk drive is the most delicate component and will likely be the first or only component that is damaged if the Notebook PC is dropped.

Processor Upgrades

Some Notebook PC models feature an upgradable processor design for faster performance in the future. Some Notebook PC models feature a ULV design for compactness and may not be upgraded. Visit an authorized service center or retailer for information on upgrades.

WARNING! End-user removal of the CPU or hard disk drive will void the warranty.

Appendix

Optional Accessories
Optional Connections
Internal Modem Compliancy
Glossary
Notebook PC Information

Optional Accessories

These items, if desired, come as optional items to complement your Notebook PC.

USB Hub (Optional)

Attaching an optional USB hub will increase your USB ports and allow you to quickly connect or disconnect many USB peripherals through a single cable.

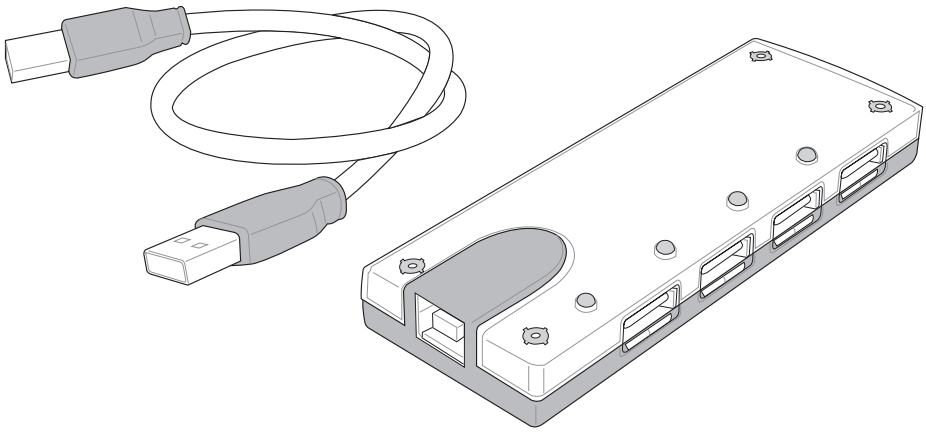

USB 2.0 Slim Combo Drive (Optional)

The slim combo drive features FlextraLink™ (anti-coaster technology) and FlextraSpeed™ (recording technology) to help prevent writing unusable discs, minimizes CPU loading to allow operation of other software while writing, and automatically adjust for optimal recording speed versus vibration to reduce rotational noise.

- Interface: USB 2.0
- Data buffer: 2MB (write), 512KB (read)
- Disc sizes: 12cm and 8cm
- DVD (read): 8X max
- CD (read): 24X max
- CD-R (write): 24X, 20X, 16X, 8X, 4X
- CD-RW (write): 12X, 10X, 8X, 4X, 2X
- Dimensions: 16mm x 129mm x 142mm
- Weight: 250g

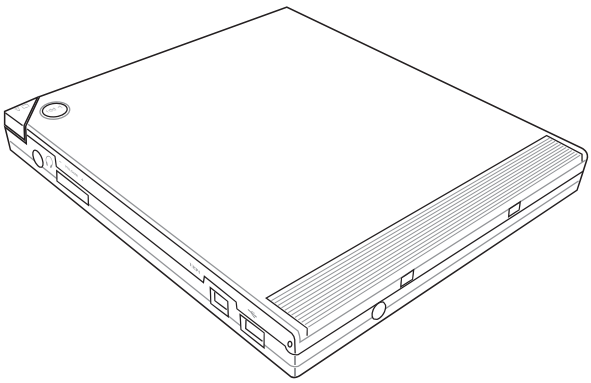

Specifications may change without notice.

Optional Accessories (Cont.)

These items, if desired, come as optional items to complement your Notebook PC.

Wireless LAN Cardbus Card or USB

The **SpaceLink™ Cardbus Card** is a dual band (IEEE 802.11a/b) wireless LAN adapter that fits into a Notebook PC's PCMCIA Type II slot with Cardbus support. The USB version is single band (IEEE 802.11b) but supports any computer (Notebook or Desktop) with a USB port.

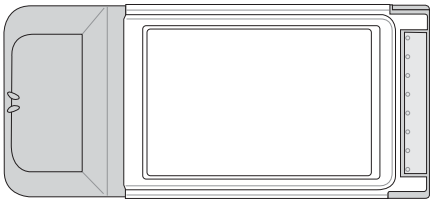

Wireless LAN (Cardbus Card)

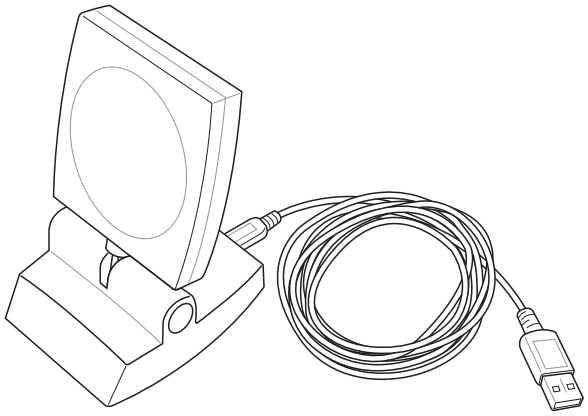

Wireless LAN (USB)

USB Flash Memory Disk

A USB flash memory disk is an optional item that can replace the 1.44MB floppy disk and provide storage up to several hundred megabytes, higher transfer speeds, and greater durability. When used in current operating systems, no drivers are necessary.

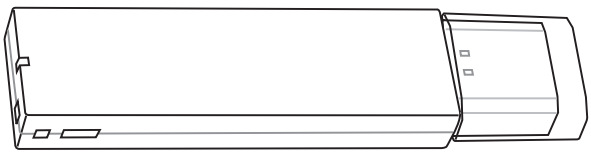

USB Communication Cable

Attaching optional USB communication cables between computers through the USB ports will allow basic file transfer capabilities between the computers whether they be Notebook PC's, Desktop PC's, or a combination of both.

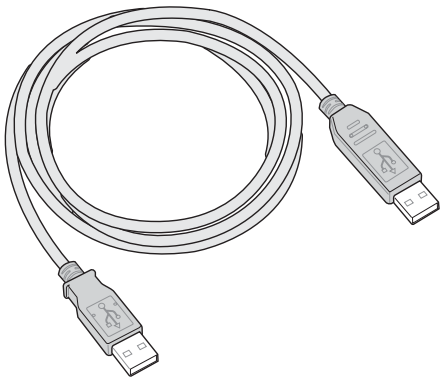

Optional Accessories (Cont.)

These items, if desired, come as optional items to complement your Notebook PC.

USB Floppy Disk Drive

The Notebook PC features an optional USB-interface disk drive that accepts a standard 1.44MB (or 720KB) 3.5-inch floppy diskette. The eject button is on the top edge of the floppy disk drive for easy access, unlike desktop PCs with the eject button on the bottom of the floppy disk drive. Floppy access activity can be monitored through the LED on the front of the floppy disk drive.

WARNING! To prevent system failures, use (Safely Remove Hardware) on the taskbar before disconnecting the USB floppy disk drive. Eject the floppy disk before transporting the Notebook PC to prevent damage from shock.

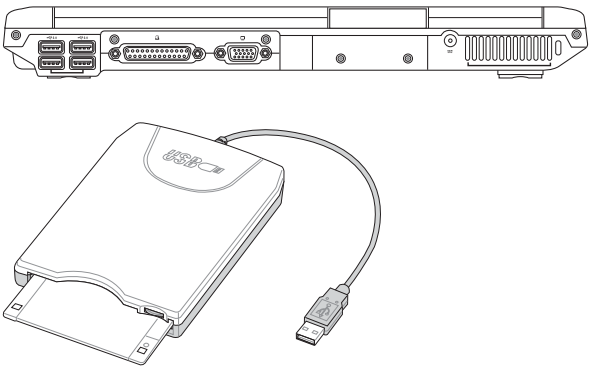

USB Keyboard and Mouse

Attaching an external USB keyboard will allow data entry to be more comfortable. Attaching an external USB mouse will allow Windows navigation to be more comfortable. Both the external USB keyboard and mouse will work simultaneously with the Notebook PC's built-in keyboard and touchpad.

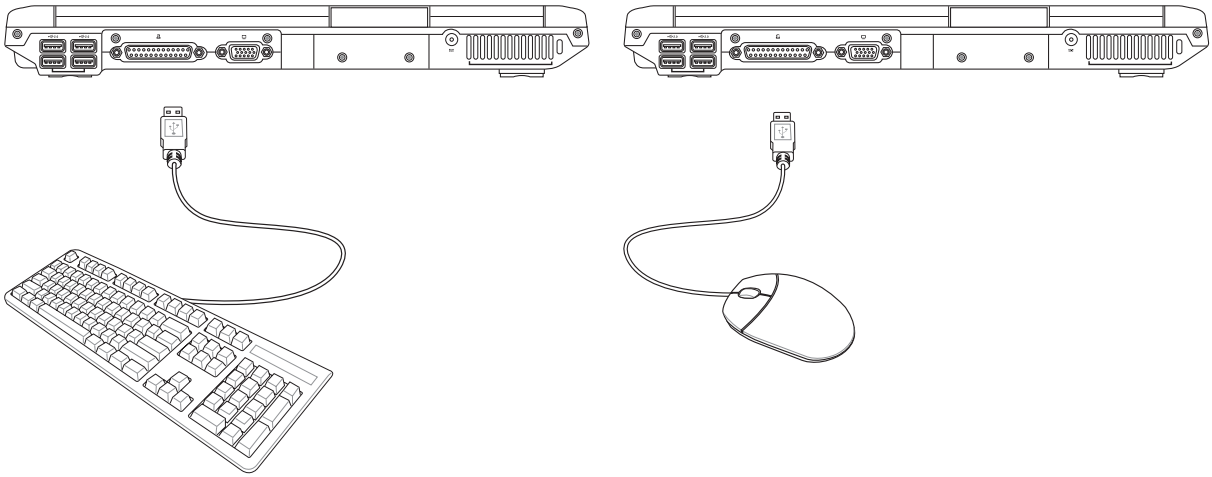

Optional Connections

These items, if desired, may be purchased from third-parties.

Monitor Out Connection

Attaching an optional VGA/LCD monitor is just like that of a standard desktop PC (some configurations may require additional display driver settings. You can view the Notebook PC display panel while simultaneously allowing others to view the external monitor. For large audiences, try you can connect a video projector to this port.

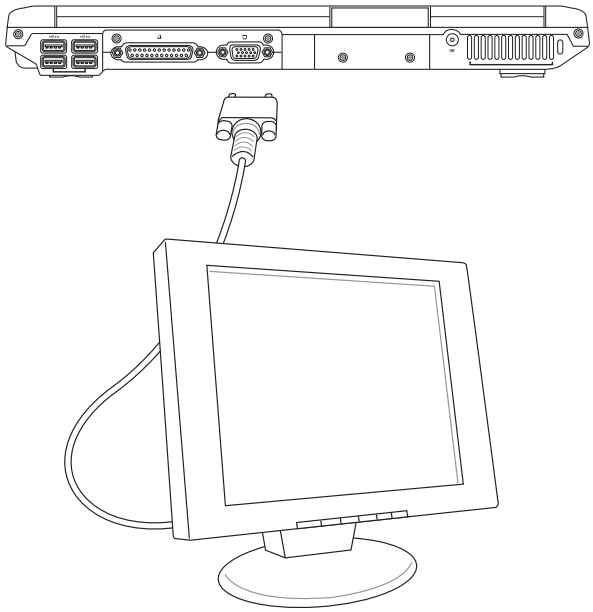

External Audio Connections

The Notebook PC provides easy access for connecting a stereo headphone or multichannel speaker system, mono microphone, and a stereo audio source just like on many personal audio equipment.

Multichannel speaker system

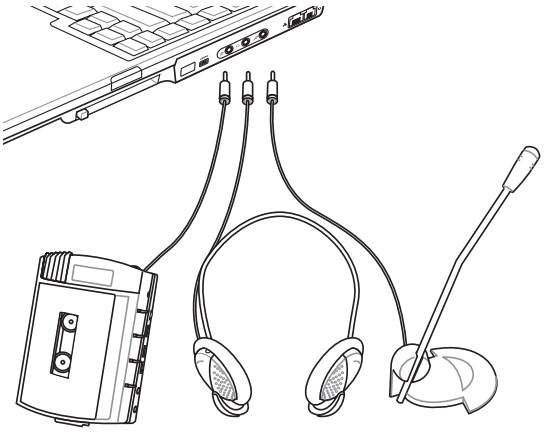

Optional Connections (Cont.)

These items, if desired, may be purchased from third-parties.

IEEE1394 Connection

1394 is a high speed serial bus like SCSI but has simple connections and hot-plugging capabilities like USB. Up to 63 devices such as hard disk drives, scanners, removable drives, and digital cameras/ video cameras with an 1394 port can all be connected (more 1394 devices can be connected using a 1394 hub). 1394 is also used in high-end digital equipment and should be marked “DV” for Digital Video port.

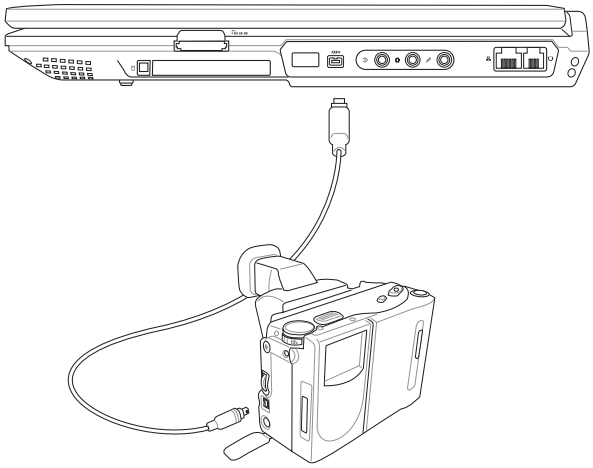

Printer Connection

One or more USB printers can be simultaneously used on any USB port or USB hub.

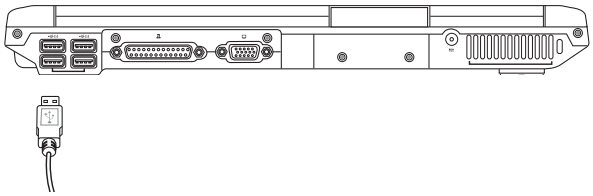

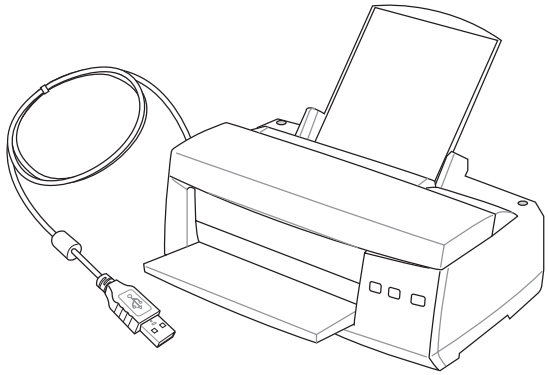

Securing Your Notebook PC

For system and hard disk drive security, see BIOS setup “Security”. A third party lock such as the ones by Kensington® can be used to secure your Notebook PC physically to an unmovable object. The cable wraps around an object and the “T” shaped end inserts into the Kensington® lock port as shown in this illustration and a key or combination dial is used to secure the lock in place.

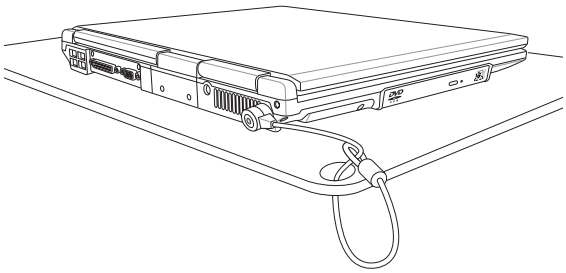

DVD-ROM Drive Information

The Notebook PC comes with an optional DVD-ROM drive or a CD-ROM drive. In order to view DVD titles, you must install your own DVD viewer software. Optional DVD viewer software may be purchased with this Notebook PC. The DVD-ROM drive allows the use of both CD and DVD discs.

Regional Playback Information

Playback of DVD movie titles involves decoding MPEG2 video, digital AC3 audio and decryption of CSS protected content. CSS (sometimes called copy guard) is the name given to the content protection scheme adopted by the motion picture industry to satisfy a need to protect against unlawful content duplication.

Although the design rules imposed on CSS licensors are many, one rule that is most relevant is playback restrictions on regionalized content. In order to facilitate geographically staggered movie releases, DVD video titles are released for specific geographic regions as defined in "Region Definitions" below. Copyright laws require that all DVD movies be limited to a particular region (usually coded to the region at which it is sold). While DVD movie content may be released for multiple regions, CSS design rules require that any system capable of playing CSS encrypted content must only be capable of playing one region.

NOTE: The region setting may be changed up to five times using the viewer software, then it can only play DVD movies for the last region setting. Changing the region code after that will require factory resetting which is not covered by warranty. If resetting is desired, shipping and resetting costs will be at the expense of the user.

Region Definitions

Region 1

Canada, US, US Territories

Region 2

Czech, Egypt, Finland, France, Germany, Gulf States, Hungary, Iceland, Iran, Iraq, Ireland, Italy, Japan, Netherlands, Norway, Poland, Portugal, Saudi Arabia, Scotland, South Africa, Spain, Sweden, Switzerland, Syria, Turkey, UK, Greece, Former Yugoslav Republics, Slovakia

Region 3

Burma, Indonesia, South Korea, Malaysia, Philippines, Singapore, Taiwan, Thailand, Vietnam

Region 4

Australia, Caribbean (Except US Territories), Central America, New Zealand, Pacific Islands, South America

Region 5

CIS, India, Pakistan, Rest of Africa, Russia, North Korea

Region 6

China

Internal Modem Compliancy

The Notebook PC with internal modem model complies with JATE (Japan), FCC (US, Canada, Korea, Taiwan), and CTR21. The internal modem has been approved in accordance with Council Decision 98/482/EC for pan-European single terminal connection to the public switched telephone network (PSTN). However due to differences between the individual PSTNs provided in different countries, the approval does not, of itself, give an unconditional assurance of successful operation on every PSTN network termination point. In the event of problems you should contact your equipment supplier in the first instance.

Overview

On 4th August 1998 the European Council Decision regarding the CTR 21 has been published in the Official Journal of the EC. The CTR 21 applies to all non voice terminal equipment with DTMF-dialling which is intended to be connected to the analogue PSTN (Public Switched Telephone Network).

CTR 21 (Common Technical Regulation) for the attachment requirements for connection to the analogue public switched telephone networks of terminal equipment (excluding terminal equipment supporting the voice telephony justified case service) in which network addressing, if provided, is by means of dual tone multifrequency signalling.

Network Compatibility Declaration

Statement to be made by the manufacturer to the Notified Body and the vendor: "This declaration will indicate the networks with which the equipment is designed to work and any notified networks with which the equipment may have inter-working difficulties"

Network Compatibility Declaration

Statement to be made by the manufacturer to the user: "This declaration will indicate the networks with which the equipment is designed to work and any notified networks with which the equipment may have inter-working difficulties. The manufacturer shall also associate a statement to make it clear where network compatibility is dependent on physical and software switch settings. It will also advise the user to contact the vendor if it is desired to use the equipment on another network."

Up to now the Notified Body of CETECOM issued several pan-European approvals using CTR 21. The results are Europe's first modems which do not require regulatory approvals in each individual European country.

Non-Voice Equipment

Answering machines and loud-speaking telephones can be eligible as well as modems, fax machines, auto-dialers and alarm systems. Equipment in which the end-to-end quality of speech is controlled by regulations (e.g. handset telephones and in some countries also cordless telephones) is excluded.

This table shows the countries currently under the CTR21 standard.

Country	Applied	More Testing
Austria[1]	Yes	No
Belgium	Yes	No
Czech Republic	No	Not Applicable
Denmark[1]	Yes	Yes
Finland	Yes	No
France	Yes	No
Germany	Yes	No
Greece	Yes	No
Hungary	No	Not Applicable
Iceland	Yes	No
Ireland	Yes	No
Italy	Still Pending	Still Pending
Israel	No	No
Lichtenstein	Yes	No
Luxemburg	Yes	No
The Netherlands[1]	Yes	Yes
Norway	Yes	No
Poland	No	Not Applicable
Portugal	No	Not Applicable
Spain	No	Not Applicable
Sweden	Yes	No
Switzerland	Yes	No
United Kingdom	Yes	No

This information was copied from CETECOM and is supplied without liability. For updates to this table, you may visit http://www.cetecom.de/technologies/ctr_21.html

[1] National requirements will apply only if the equipment may use pulse dialling (manufacturers may state in the user guide that the equipment is only intended to support DTMF signalling, which would make any additional testing superfluous).

In The Netherlands additional testing is required for series connection and caller ID facilities.

Glossary

ACPI (Advanced Configuration and Power Management Interface)

Modern standard for reducing power usage in computers.

APM (Advanced Power Management)

Modern standard for reducing power usage in computers.

AWG (American Wire Gauge)

Gauge AWG	Diam (mm)	Area (mm2)	R (ohm/km)	I@3A/mm2 (mA)	Gauge AWG	Diam (mm)	Area (mm2)	R (ohm/km)	I@3A/mm2 (mA)
46	0.04	0.0013	13700	3.8	24	0.50	0.20	87.5	588
44	0.05	0.0020	8750	6		0.55	0.24	72.3	715
42	0.06	0.0028	6070	9		0.60	0.28	60.7	850
41	0.07	0.0039	4460	12	22	0.65	0.33	51.7	1.0 A
40	0.08	0.0050	3420	15		0.70	0.39	44.6	1.16 A
39	0.09	0.0064	2700	19		0.75	0.44	38.9	1.32 A
38	0.10	0.0078	2190	24	20	0.80	0.50	34.1	1.51 A
37	0.11	0.0095	1810	28		0.85	0.57	30.2	1.70 A
	0.12	0.011	1520	33	19	0.90	0.64	26.9	1.91 A
36	0.13	0.013	1300	40		0.95	0.71	24.3	2.12 A
35	0.14	0.015	1120	45	18	1.00	0.78	21.9	2.36 A
	0.15	0.018	970	54		1.10	0.95	18.1	2.85 A
34	0.16	0.020	844	60		1.20	1.1	15.2	3.38 A
	0.17	0.023	757	68	16	1.30	1.3	13.0	3.97 A
33	0.18	0.026	676	75		1.40	1.5	11.2	4.60 A
	0.19	0.028	605	85		1.50	1.8	9.70	5.30 A
32	0.20	0.031	547	93	14	1.60	2.0	8.54	6.0 A
30	0.25	0.049	351	147		1.70	2.3	7.57	6.7 A
29	0.30	0.071	243	212	13	1.80	2.6	6.76	7.6 A
27	0.35	0.096	178	288		1.90	2.8	6.05	8.5 A
26	0.40	0.13	137	378	12	2.00	3.1	5.47	9.4 A
25	0.45	0.16	108	477					

NOTE: This table is for general reference only and should not be used as a source of the American Wire Gauge standard as this table may not be current or complete.

BIOS (Basic Input/Output System)

BIOS is a set of routines that affect how the computer transfers data between computer components, such as memory, disks, and the display adapter. The BIOS instructions are built into the computer's read-only memory. BIOS parameters can be configured by the user through the BIOS Setup program. The BIOS can be updated using the provided utility to copy a new BIOS file into the EEPROM.

Bit (Binary Digit)

Represents the smallest unit of data used by the computer. A bit can have one of two values: 0 or 1.

Boot

Boot means to start the computer operating system by loading it into system memory. When the manual instructs you to "boot" your system (or computer), it means to turn ON your computer. "Reboot" means to restart your computer. When using Windows 95 or later, selecting "Restart" from "Start | Shut Down..." will reboot your computer.

Bus Master IDE

PIO (Programmable I/O) IDE requires that the CPU be involved in IDE access and waiting for mechanical events. Bus master IDE transfers data to/from the memory without interrupting the CPU. Bus master IDE driver and bus master IDE hard disk drives are required to support bus master IDE mode.

Byte (Binary Term)

One byte is a group of eight contiguous bits. A byte is used to represent a single alphanumeric character, punctuation mark, or other symbol.

Clock Throttling

Chipset function which allows the processor's clock to be stopped and started at a known duty cycle. Clock throttling is used for power savings, thermal management, and reducing processing speed.

COM Port

COM is a logical device name used by to designate the computer serial ports. Pointing devices, modems, and infrared modules can be connected to COM ports. Each COM port is configured to use a different IRQ and address assignment.

CPU (Central Processing Unit)

The CPU, sometimes called "Processor," actually functions as the "brain" of the computer. It interprets and executes program commands and processes data stored in memory.

Device Driver

A device driver is a special set of instructions that allows the computer's operating system to communicate with devices such as VGA, audio, Ethernet, printer, or modem.

Hardware

Hardware is a general term referring to the physical components of a computer system, including peripherals such as printers, modems, and pointing devices.

DVD is essentially a bigger, faster CD that can hold video as well as audio and computer data. With these capacities and access rates, DVD discs can provide you with dramatically-enhanced high-color, full-motion videos, better graphics, sharper pictures, and Dolby® Digital Surround for a theater-like experience. DVD aims to encompass home entertainment, computers, and business information with a single digital format, eventually replacing audio CD, videotape, laserdisc, CD-ROM, and perhaps even video game cartridges. DVD has widespread support from all major electronics companies, all major computer hardware companies, and most major movie and music studios.

Device Driver

A device driver is a special set of instructions that allows the computer's operating system to communicate with devices such as VGA, audio, Ethernet, printer, or modem.

Hardware

Hardware is a general term referring to the physical components of a computer system, including peripherals such as printers, modems, and pointing devices.

IDE (Integrated Drive Electronics)

IDE devices integrate the drive control circuitry directly on the drive itself, eliminating the need for a separate adapter card (in the case for SCSI devices). UltraDMA/66 or 100 IDE devices can achieve up to 33MB/Sec transfer.

IEEE1394

Also known as iLINK (Sony) or FireWire (Apple). IEEE1394 is a high speed serial bus like SCSI but has simple connections and hot-plugging capabilities like USB. The interface IEEE1394 has a bandwidth of 400-1000 Mbits/sec and can handle up to 63 units on the same bus. It is very likely that IEEE1394, together with USB, will replace Parallel, IDE, SCSI, and EIDE ports. IEEE1394 is also used in high-end digital equipment and should be marked "DV" for Digital Video port.

Infrared Port (IrDA)

The infrared (IrDA) communication port allows convenient wireless data communication with infrared-equipped devices or computers. This allows easy wireless synchronization with PDAs or mobile phones and even wireless printing to printers. If your office supports IrDA networking, you can have wireless connection to a network anywhere provided there is a direct line of sight to an IrDA node. Small offices can use IrDA technology to share a printer between several closely placed Notebook PCs and even send files to each other without a network.

Kensington® Locks

Kensington® locks (or compatible) allow the Notebook PC to be secured usually using a metal cable and lock that prevent the Notebook PC to be removed from a fixed object. Some security products may also include a motion detector to sound an alarm when moved.

Laser Classifications

As lasers became more numerous and more widely used, the need to warn users of laser hazards became apparent. To meet this need, laser classifications were established. Current classification levels vary from optically safe, requiring no controls (Class 1) to very hazardous, requiring strict controls (Class 4).

CLASS 1: A Class 1 laser or laser system emits levels of optical energy that are eye-safe and consequently require no controls. An example of this class of laser system is the checkout scanning device found in most grocery stores or lasers used in optical drives.

CLASS 2 AND CLASS 3A: Class 2 and Class 3A lasers emit visible, continuous-wave (CW) optical radiation levels slightly above the maximum permissible exposure (MPE) level. Although these lasers can cause eye damage, their brightness usually causes observers to look away or blink before eye damage occurs. These lasers have strict administrative controls requiring placement of signs warning personnel not to stare directly into the beam. Class 3A lasers must not be viewed with optically-aided devices.

CLASS 3B: Class 3B lasers, and Class 3A lasers with outputs of 2.5mW, are hazardous to personnel who are within the beam path and look at the beam source directly or by specular reflection. These lasers cannot produce hazardous diffuse reflections. Personnel working with these lasers should wear appropriate protective eyewear during any operation of the laser. Class 3B lasers have both administrative and physical controls to protect personnel. Physical controls include limited access work areas. Administrative controls include special warning signs posted outside the entrances to the laser work spaces and lights outside the entrances that warn personnel when the lasers are in use.

CLASS 4: Class 4 lasers are high-power lasers that will cause damage to unprotected eyes and skin through intra-beam viewing and specular or diffuse reflections. Consequently, no personnel should be in aroom where a Class 4 laser is operating without proper eye protection.

LPT Port (Line Printer Port)

Logical device name reserved by DOS for the computer parallel ports. Each LPT port is configured to use a different IRQ and address assignment.

PCI Bus (Peripheral Component Interconnect Local Bus)

PCI bus is a specification that defines a 32-bit data bus interface. PCI is a standard widely used by expansion card manufacturers.

PC Cards (PCMCIA)

PC cards are about the size of a few stacked credit cards and have a 68-pin connector at one end. The PC Card standard accommodates a number of function, communication, and data storage expansion options. PC cards come in memory/flash cards, fax/modems, networking adapters, SCSI adapters, MPEG I/II decoder cards, and even wireless modem or LAN cards. The Notebook PC supports PCMCIA 2.1, and 32-bit CardBus standards. The three different PC Card standards actually have different thicknesses. Type I cards are 3.3mm, Type II cards are 5mm, and Type III cards are 10.5mm thick. Type I and Type II cards can be used in a single socket. Type III cards take up two sockets and must be used on Notebook PCs with two sockets.

POST (Power On Self Test)

When you turn on the computer, it will first run through the POST, a series of software-controlled diagnostic tests. The POST checks system memory, the motherboard circuitry, the display, the keyboard, the diskette drive, and other I/O devices.

PS/2 Port

PS/2 ports are based on IBM Micro Channel Architecture. This type of architecture transfers data through a 16-bit or 32-bit bus. A PS/2 mouse and/or keyboard may be used on ATX motherboards.

RAM (Random Access Memory)

There are several different types of RAM such as DDR (Double Dynamic RAM), DRAM (Dynamic RAM), EDO DRAM (Extended Data Output DRAM), SDRAM (Synchronous DRAM).

ROM (Read Only Memory)

ROM is nonvolatile memory used to store permanent programs (called firmware) used in certain computer components. Flash ROM (or EEPROM) can be reprogrammed with new programs (or BIOS).

Suspend Mode

In Save-to-RAM (STR) and Save-to-Disk (STD), the CPU clock is stopped and most of the Notebook PC devices are put in their lowest active state. The Notebook PC enters Suspend when the system remains idle for a specified amount of time or manually using the function keys. The timeout setting of both Hard Disk and Video can be set by the BIOS Setup. The Power LED blinks when the Notebook PC is in STR mode. In STD mode, the Notebook PC will appear to be powered OFF.

System Disk

A system disk contains the core file of an operating system and is used to boot up the operating system.

Twisted-Pair Cable

The cable used to connect the Ethernet card to a host (generally a Hub or Switch) is called a straight-through Twisted Pair Ethernet (TPE). The end connectors are called RJ-45 connectors, which are not compatible with RJ-11 telephone connectors. If connecting two computers together without a hub in between, a crossover twisted-pair is required.

UltraDMA/66 or 100

UltraDMA/66 or 100 are new specifications to improve IDE transfer rates. Unlike traditional PIO mode, which only uses the rising edge of IDE command signal to transfer data, UltraDMA/66 or 100 uses both rising edge and falling edge.

USB (Universal Serial Bus)

A new 4-pin serial peripheral bus that allows plug and play computer peripherals such as keyboard, mouse, joystick, scanner, printer and modem/ISDN to be automatically configured when they are attached physically without having to install drivers or reboot. With USB, the traditional complex cables from back panel of your PC can be eliminated.

Notebook PC Information

This page is provided for recording information concerning your Notebook PC for future reference or for technical support. Keep this User's Manual in a secured location if passwords are filled out.

Owner's Name: _____ **Owner's Telephone:** _____

Manufacturer: _____ **Model:** _____

Retailer: _____ **Telephone:** _____

Display Size: _____ **Purchase Date:** _____ **Serial Number:** _____

Hard Disk Drive Manufacturer: _____ **Capacity:** _____

2nd Hard Disk Drive Manufacturer: _____ **Capacity:** _____

BIOS Version: _____ **Date:** _____

Accessories: _____ **Serial Number:** _____

Accessories: _____ **Serial Number:** _____

Software

Operating System: _____ **Version:** _____

Software: _____ **Serial Number:** _____

Software: _____ **Serial Number:** _____

Security

Supervisor Password: _____ **User Password:** _____

Network

User's Name: _____ **Password:** _____ **Domain:** _____

User's Name: _____ **Password:** _____ **Domain:** _____

Contact Information

ASUSTeK COMPUTER INC. (Asia-Pacific)

Company Address: 150 Li-Te Road, Peitou, Taipei, Taiwan 112
General Telephone: +886-2-2894-3447 Web Site Address: www.asus.com.tw
General Fax: +886-2-2894-7798 General Email: info@asus.com.tw

Technical Support

MB/Others (Tel): +886-2-2890-7121 (English) Notebook (Tel): +886-2-2894-3447
Desktop/Server (Tel): +886-2-2890-7123 (English) Support Fax: +886-2-2890-7698

ASUS COMPUTER INTERNATIONAL (America)

Company Address: 44370 Nobel Drive, Fremont, CA 94538, USA
General Email: tsd@asus.com Web Site Address: usa.asus.com
General Fax: +1-510-608-4555

Technical Support

Support Email: notebooktsd@asus.com Support Fax: +1-502-933-8713
General Support: +1-502-995-0883 Notebook (Tel): +1-510-739-3777 x5110

ASUS COMPUTER GmbH (Germany & Austria)

Company Address: Harkort Str. 25, D-40880 Ratingen, Germany
Web Site Address: www.asuscom.de General Telephone: +49-2102-95990
Online Contact: www.asuscom.de/sales General Fax: +49-2102-959911

Technical Support

Online Support: www.asuscom.de/support Support Fax: +49-2102-959911
Component Support: +49-2102-95990 Notebook Support: +49-2102-959910

ASUS COMPUTER (Middle East and North Africa)

Company Address: P.O. Box 64133, Dubai, U.A.E. General Telephone: +9714-283-1774
Web Site Address: www.ASUSarabia.com General Fax: +9714-283-1775