Measurement of Maximum Permissible Exposure

1. Foreword

In adopt with the Human Exposure IEEE C95.1, and according to the FCC 1.1310. The *Maximum Permissible Exposure (MPE)* is obligated to measure in order to prove the safety of radiation harmfulness to the human body.

The *Gain* of the antenna used is measured in an *Anechoic chamber*. The *maximum total power to the antenna* is to be recorded. By adopting the ***Friis Transmission Formula*** and the *power gain of the antenna*, we can find the distance right away from the product, where the limit of the MPE is.

2. Description of EUT

Granted FCC ID	**:**	MSQWL120G
Product name	**:**	Wireless LAN Mini-PCI Card
Model name	**:**	WL-120g
Classification	**:**	Mobile Device (i) Under normal use condition, the antenna is at least 20cm away from the user; (ii) Warning statement for keeping 20cm separation distance and the prohibition of operating next to the person has been printed in the user' s manual
Frequency Range	**:**	2.412 GHz ~ 2.462GHz
Supported Channel	**:**	11 Channel
Modulation Skill	**:**	DBPSK, DQPSK, CCK, OFDM
Power Type	**:**	Powered by Mini-PCI interface of client' s device

3. Limits for *Maximum Permissible Exposure (MPE)*

Frequency Range (MHz)	Electric Field Strength (V/m)	Magnetic Filed Strength (H) (A/m)	Power Density (S) (mW/cm2)	Averaging Time $\|E\|^2$, $\|H\|^2$ or S (minutes)
(A) Limits for Occupational/Controlled Exposure				
0.3-3.0	614	1.63	100	6
3.0-30	1842/f	4.89/f	$900/f^2$	6
30-300	61.4	0.163	1.0	6
300-1500	--	--	f/300	6
1500-100,000	--	--	5	6
(B) Limits for General Population/Uncontrolled Exposure				
0.3-1.34	614	1.63	100	30
1.34-30	824/f	2.19/f	$180/f^2$	30
30-300	27.5	0.073	0.2	30
300-1500	--	--	f/1500	30
1500-100,000	--	--	1.0	30

[The EUT is tested in transmit and receive modes and in the first, middle and the last channel separately. The following shows only our observation have the greatest emissions.]

According to **OET BULLETIN 56 Fourth Edition/August 1999**, **Equation for Predicting RF Fields:**

Friis Transmission Formula: $S = \frac{PG}{4pR^2} = \frac{133.968 \times 1.995}{4p\,(20)^2} = 0.053 mW/cm^2$

Estimated safe separation: $R = \sqrt{\frac{PG}{4p}} = \sqrt{\frac{133.968 \times 1.995}{4p}} = 4.612 cm$

Remarks: "The safe estimated separation that the user must maintain from the antenna is at least 4.612 cm."

Where: S = *power density* (in appropriate units, e.g. mW/cm2)

P = *power input* to the antenna (in appropriate units, e.g., mW)

G = *power gain* of the antenna in the direction of interest relative to an isotropic radiator

R = *distance* to the center of radiation of the antenna (appropriate units, e.g., cm)

The *Numeric gain G* of antenna with a gain specified in dB is determined by:

G = Log^{-1} (***dB*** antenna gain / 10)

G = Log^{-1} (3 / 10) = 1.995

*Contents in this sheet are subject to change without prior notice

APPROVAL SHEET

PCB ANTENNA
ISM BAND Series
2.4 GHz Band Working Frequency

Component A: RFPCA530660IFABA01

Component B: RFPCA530644IFABA02

Customer : ASUSTeK Computer Inc.

Module Name : Notebook_L5G

Approval No : 14-152016112 (L5 WLAN ANTENNA_L/BLACK)

14-152016012 (L5 WLAN ANTENNA_R/GRAY)

Issue Date : Dec. 02, 2003

Customer Approval :

WALSIN Technology Corp.

Authorized By :

REVISION HISTORY

REV	Date	Description	CHK	APVD	Date
1	8-May	New release	Renny	Kevin	8-May
2	15-May	PCB Ant P/N rule modify; Gray cable change to 45cm	Patrick		
3	19-May	Black cable change to 60cm; Gray cable change to 44cm Add one Mylar	Patrick		
4	21-May	Add “adhesive” to material table; Update Dimension	Patrick		May 21
5	21-May	Asus p/n change as: 14-152016110 -> 14-152016111 14-152016010 -> 14-152016011	Jo		
6	23-May	Adhesive on Mylar change to bottom side	Patrick		
7	29-May	Sponge moved to middle of PCB MP P/N release	Patrick	Kevin	May 29
8	09-July	Change P/N and dimension	Jo	Patrick	July 9
9	Dec 02	Extend model – L5G/L5D		Patrick	Dec. 02

ELECTRICAL CHARACTERISTICS

Item	Specification
Frequency Range	2.4 ~2.4835 GHz
Peak Gain	＜ 3dBi
Average Gain	＞ -5 dBi
VSWR	2.5 max
Polarization	Linear
Impedance	50?

*note: Electrical characteristics will depend on customer' s final application. Data provided in this sheet has been approved on ASUS L5C model.

MATERIAL TABLE

Items	Vendor	Part number	Description
Connector	I-PEX	22078-111R-13	MHF series micro coaxial connector plug vertical
Cable	Hitachi	UL1745	AWG#32x1C
Adhesive	Sony Chemicals Corp.	T4000	Industrial Adhesive Tape

Note: Hitachi cable is replaceable by AXON or HannStar while Hitachi is short of supply.

CODING RULE

RF	PCA	5010	60	I	F	A	B	A	01
Type Code	**Product Code**	**PCB Dimension (Unit: mm)**	**Cable Length (unit: cm)**	**Connector Brand**	**Type of Connector**	**Application**	**Packing**	**Customer**	**Project**
Walsin RF Device	PCA: PCB Antenna	Per 2 digits of length, width e.g.: 5010 Length 50mm, Width 10mm	2 digits for cable length e.g.: 60 Length 60cm	I: IPEX H: Hirose M: MMCX	F: Female M: Male	A: 2.4GHz ISM band B: GSM 900/1800 dual band L: 2.4/5.2/5.8 GHz tri-band	B: Bulk X: SFC product	—	01~99 series number

DIMENSIONS

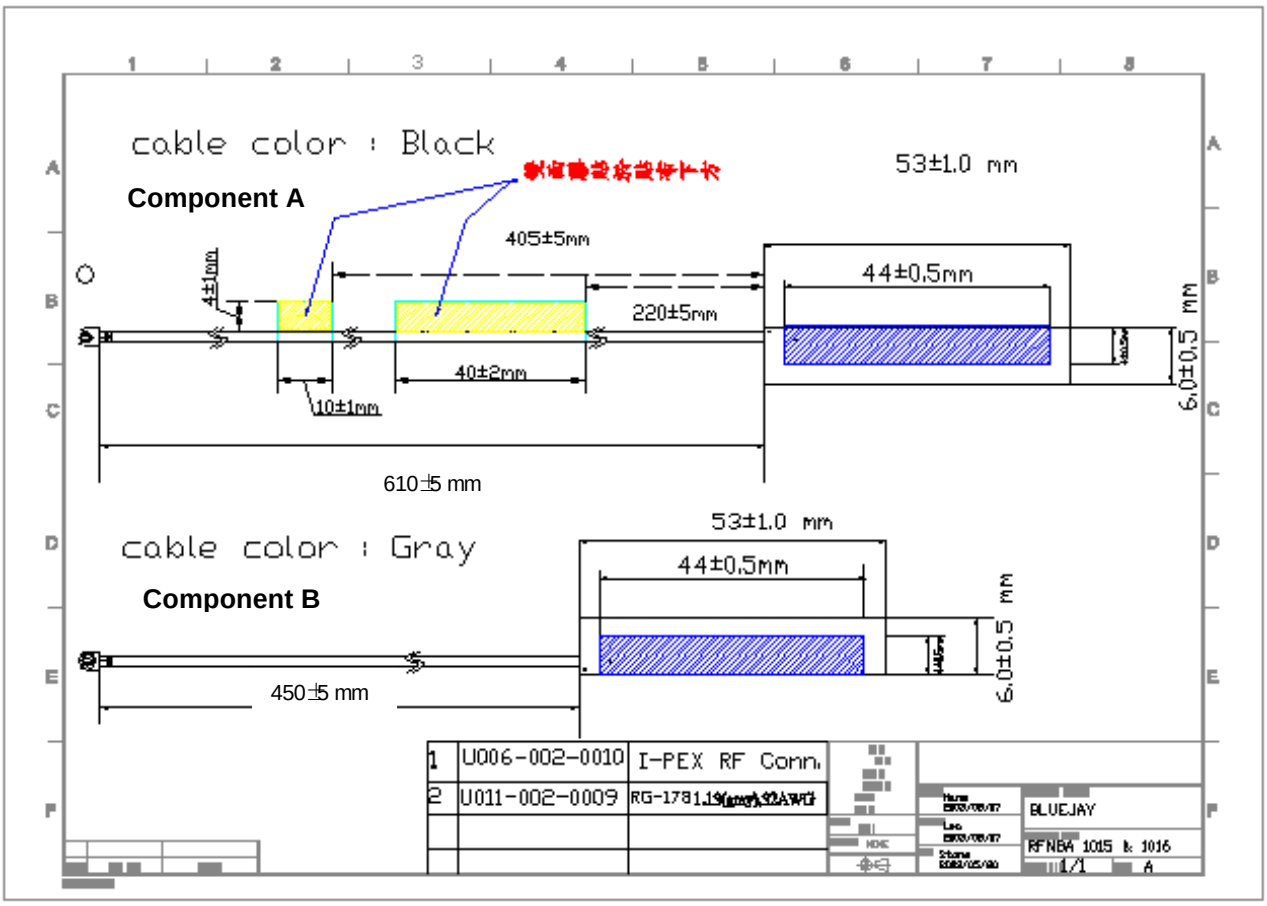
cable color : Black
Component A
53±1.0 mm
405±5mm
44±0.5mm
4±1mm
220±5mm
40±2mm
10±1mm
6.0±0.5 mm
610±5 mm
cable color : Gray
Component B
53±1.0 mm
44±0.5mm
6.0±0.5 mm
450±5 mm
1 U006-002-0010 I-PEX RF Conn.
2 U011-002-0009 RG-178
BLUEJAY
RFNBA 1015 & 1016
1/1
A

連展科技股份有限公司

ADVANCED-CONNECTEK INC.

承　認　書

SPECIFICATION FOR APPROVAL

貴 公 司 *CUSTOMER*	
產品名稱 *DESCRIPTION*	**2.4GHz Dipole Antenna SMA 90-180 Deg Male RP**
客戶料號 *CUSTOMER P/N*	
連展料號 *ACON P/N*	ADA06-1K10000
部門確認 *DESINGER*	工程　　機構　　品保
檢送日期 SENDING DATE	
核准編號 *APPROVAL NO.*	

DESCRIPTION：

Omni - directional antenna which is useful for 802.11b/g（ISM band）,

Ex：Wireless LAN .

SPECIFICATION：

Part Number： **ADA06-1K10000**	
Appearance & Dimensions：	108(L) × 10.5(R) mm
Weight：	≤ 20 g
Operation Frequency：	2.4~2.4835 GHz
Impedance：	50 Ohms
Polarization：	Vertical
Antenna Gain：	1.91 dBi (Max.)
Antenna SWR：	≤ 2：1
Connector Type：	SMA Male RP

REV.	DESCRIPTION	DRAWN/DATE	CHECK/DATE	APPROVED/DATE

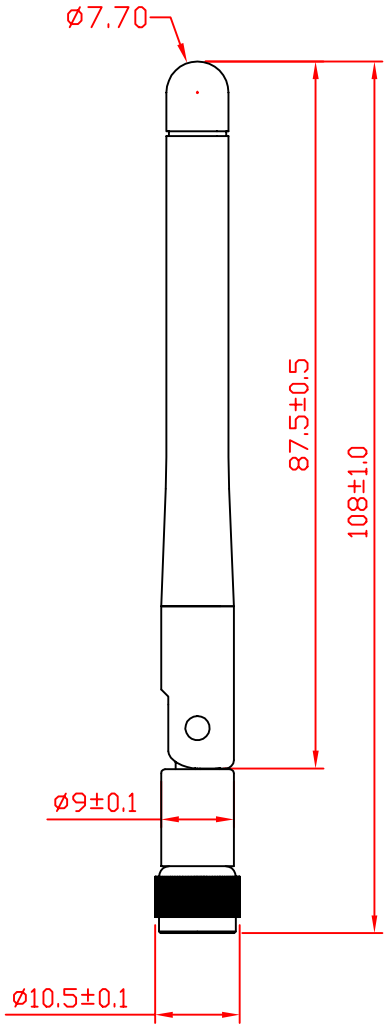

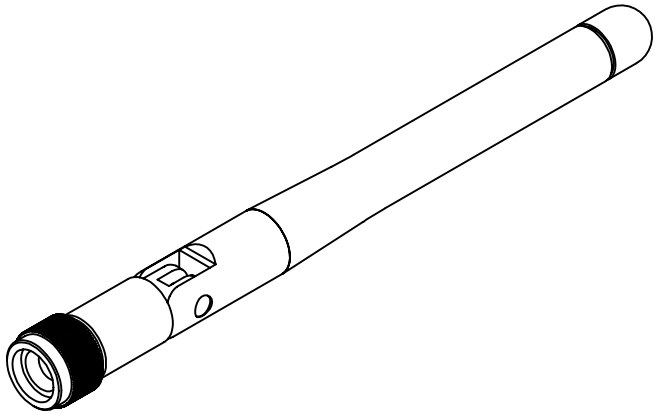

GENERAL TOLERANCE		ANGLE TOLERANCE	
X.	±0.20		
.X	±0.10	X°.	±2.0°
.XX	±0.05	.X°	±1.0°
.XXX	±0.03	.XX°	±0.5°

MATL

FINISH

SCALE 1 : 1 UNIT mm

SHEET 1 OF 1

DRAWN	Duan	DATE 91-01-22
DESIGN	Duan	DATE 91-01-22
CHECKED	Duan	DATE 91-01-22
APPROVED	方鴻明	DATE 91-01-22

ACON ADVANCED – CONNECTEK INC.

TITLE SMA-90° -180°

SERIES

SIZE A4

DRAWING NO. ADA06-1K10000

REV.

ACON
ADVANCED-CONNECTEK (TIAN-JIN) LTD.

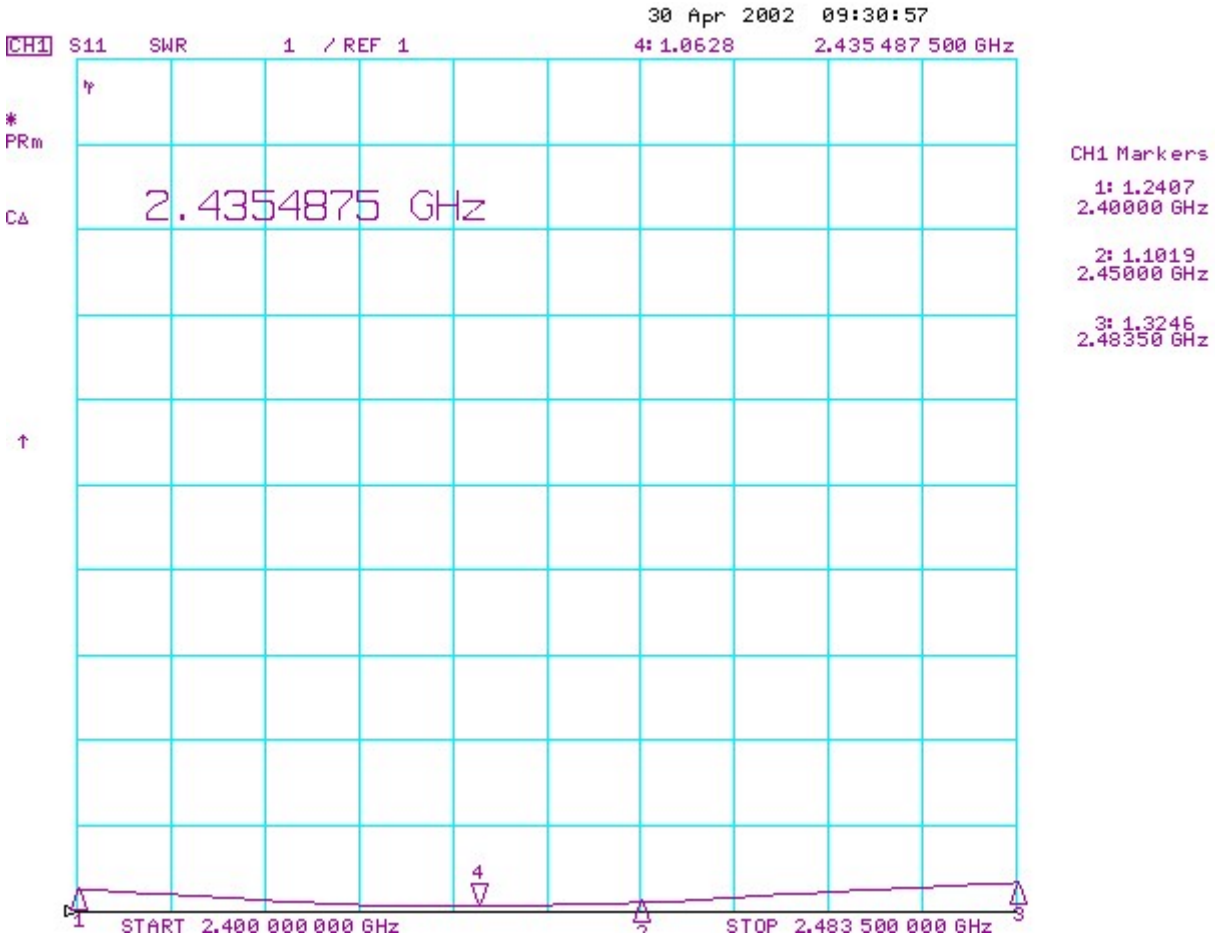

ACON
ADVANCED-CONNECTEK (TIAN-JIN) LTD.

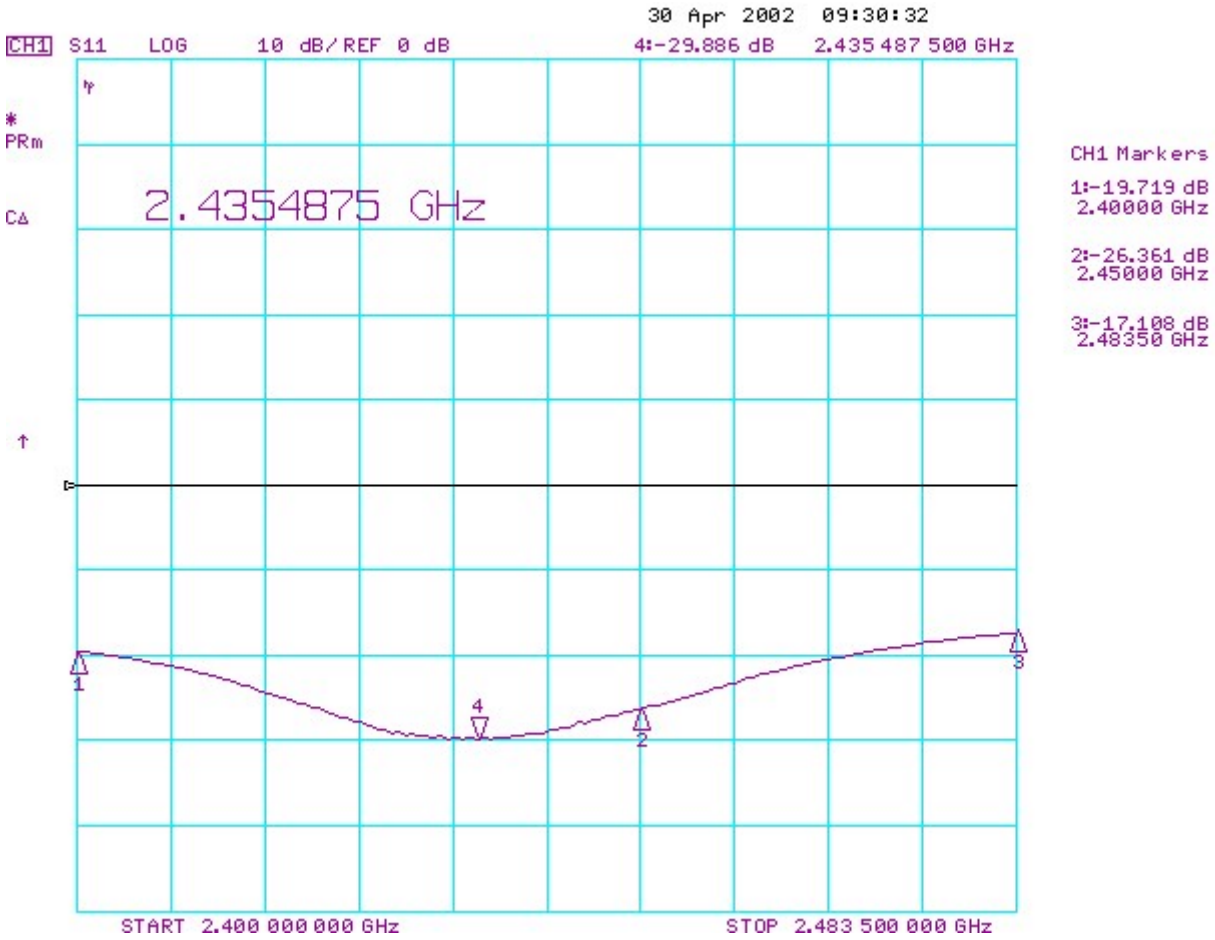

連展科技股份有限公司

MEASUREMENT SOFTWARE DESIGNER: ACON

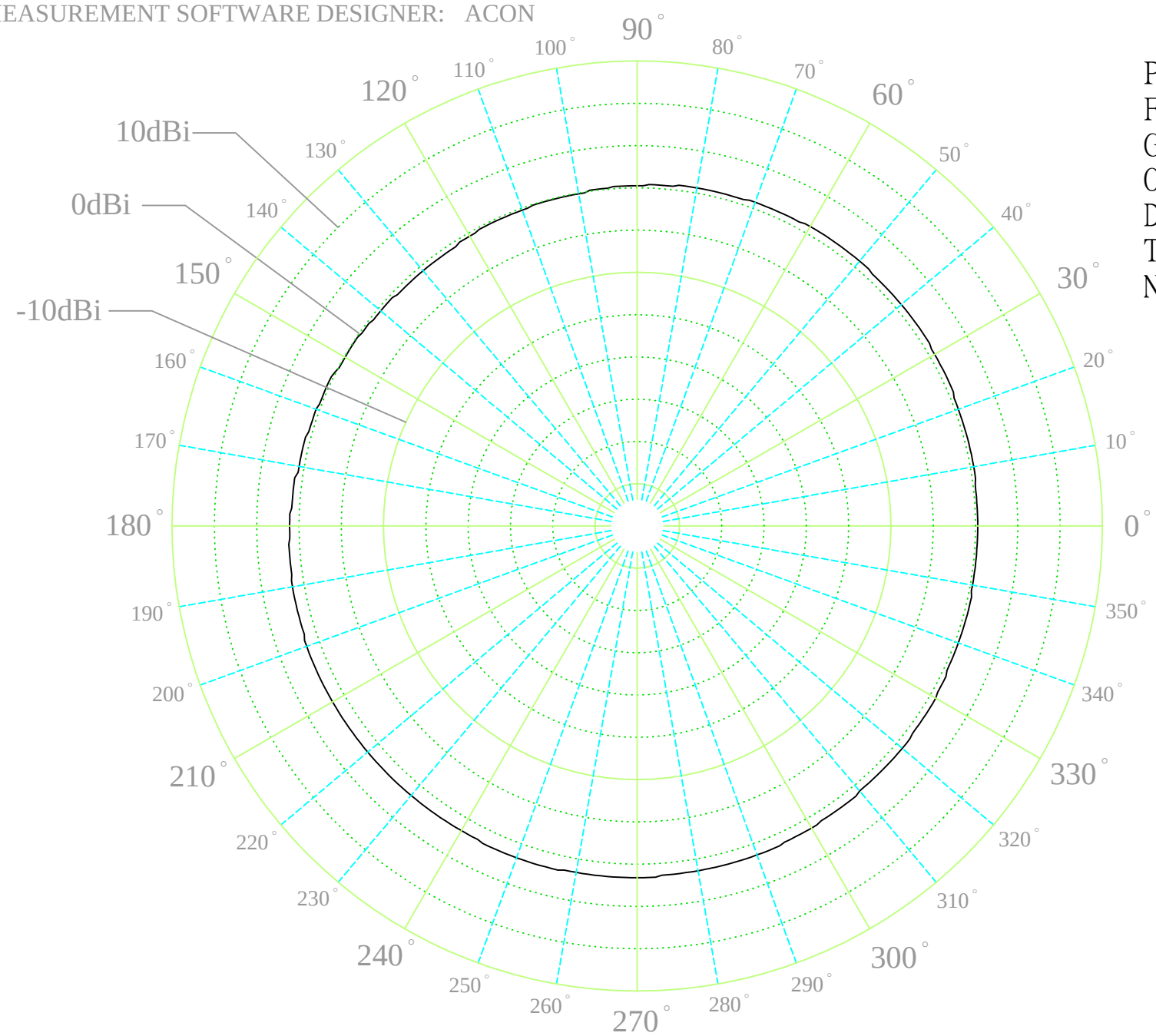

Pattern Type : H - Plane
Frequency : 2450 MHz
Gain : 1.75 dBi(244°)
Operator : TOM
Date : 2002/4/30
Time : AM 11:04:48
Note : SMA-90-180 male-femal

連展科技股份有限公司

MEASUREMENT SOFTWARE DESIGNER: ACON

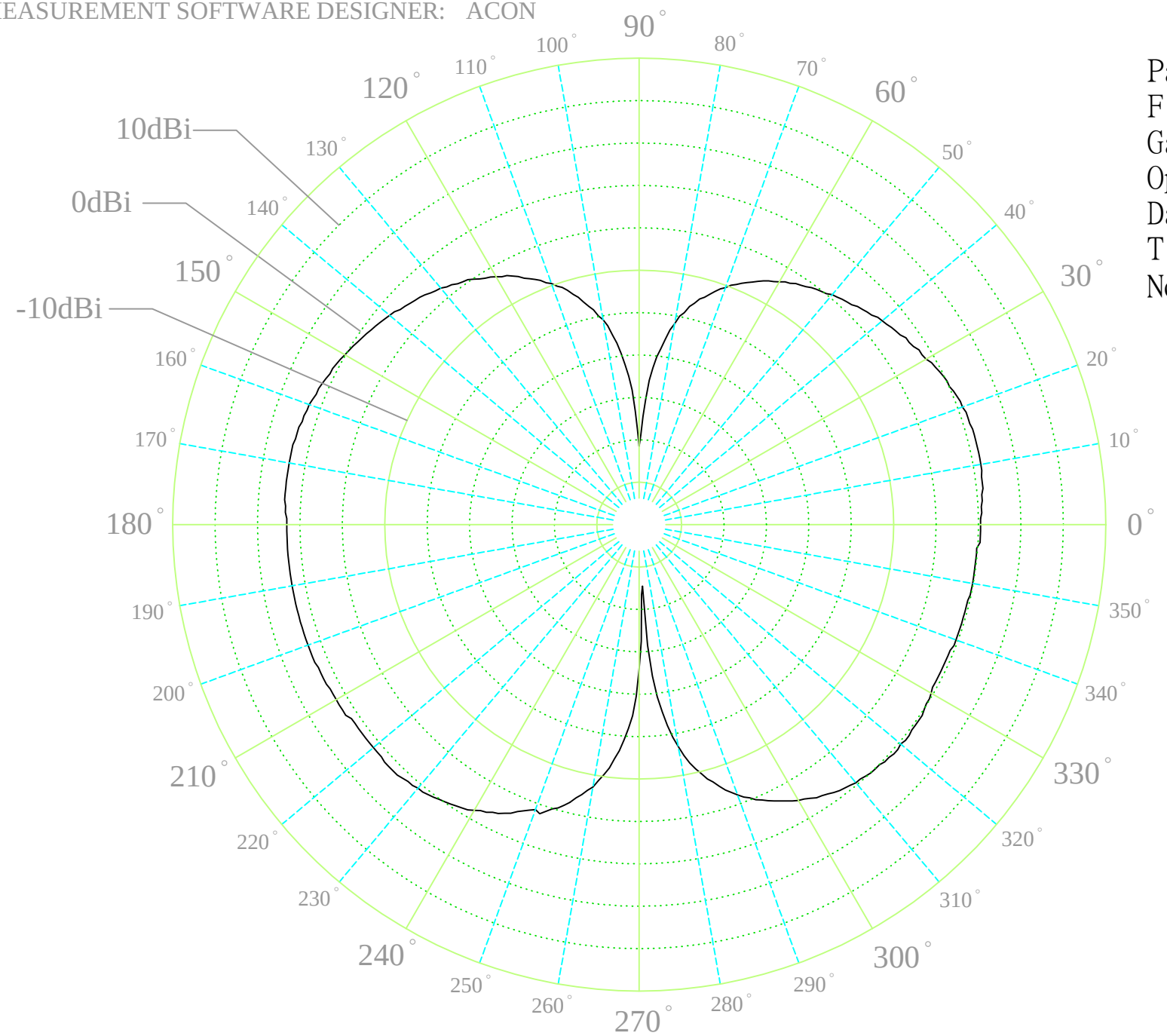

Pattern Type : E - Plan
Frequency : 2450 MHz
Gain : 1.91 dBi(167°)
Operator : TOM
Date : 2002/4/30
Time : PM 05:19:15
Note : SMA 90-180 male RP

Material :

台化聚丙烯腈-丁二烯-苯乙烯 (ABS)塑膠粒物性彙總表

TAIRILAC ABS resin consolidated property data sheet

項 目 Property	單 位 Unit	試驗方法 Test Method	試驗條件 Test Condition	AG15A1
抗張強度 Tensile Strength	kg/cm^2 (MPa)	ASTM D-638 (ISO527)	23℃	510 (50)
彎曲強度 Flexural Strength	kg/cm^2 (MPa)	ASTM D-790 (ISO178)	23℃	850 (84)
彎曲模數 Flexural Modulus	kg/cm^2 (MPa)	ASTM D-790 (ISO178)	23℃	27000 (2650)
洛式硬度 Rockwell Hardness	R-Scale	ASTM D-785 (ISO2039/2)	23℃	R-110
Izod衝擊強度 Izod Impact Strength	kg-cm/cm (Jm)	ASTM D-256 (ISO R180)	23℃ 1/4" 厚	20 (196)
衛氏軟化點 Vicat Softening Temperature	℃	ASTM D-1525 (ISO 306)	1Kg load	104
熱變形溫度 Heat Deflection Temperature	℃	ASTM D-648 (ISO 75/A)	Unannealed $18.6kg/cm^2$ (1/2" 厚)	89
			Annealed (85 ×8Hr)	101
熔融指數 Melt Flow Index	g/10 min	ASTM D-1238 (ISO1133)	200℃×5Kg (49N)	1.6
			220℃×10Kg (98N)	17
比 重 Specific Gravity		ASTM D-792 (ISO1183)	23℃/23℃	1.05
燃燒性 Flammability		UL-94	FILE NO. E162823	1/16" HB All Color

台灣大華

TPU. 材質說明.

100系列. 95A.

DYLON is a thermoplastic polyurethane elastomer. It combines the property pattern of high-quality PUR elastomers with the processing efficiency of thermoplastic. It is also excellent at chemical property, mechanical property, processing and resistance to water and sovents. Conseqventialy. DYLON is widely used at that processings of Infection moulding, Extrusion, Blown Film, Extrusion Coating, Melting, etc. In the future DYLON, we surely confirm, will be more familiar with people. as some special types being developed and more compounded techniques being explored, and it would be the key which makes the world better.

TECHNICAL INFORMATION

TYPE / ITEM \ DYLON	ESTER													ETHER						
	A-8000SE	A-8500SE	A-9000SE	A-9500SE	D-5400SE	A-8000S	A-8500S	A-9000S	A-9500S	A-9800S	D-6100SE	D-6400SE	D-7100SE	A-8000EE	A-9000EE	A-9500EE	A-9000E	A-9500E	D-5400E	D-6400E
Sp. Gr.	1.2±0.1	1.2±0.1	1.2±0.1	1.2±0.1	1.2±0.1	1.2±0.1	1.2±0.1	1.2±0.1	1.2±0.1	1.2±0.1	1.2±0.1	1.2±0.1	1.2±0.1	1.1±0.05	1.1±0.05	1.1±0.05	1.1±0.05	1.1±0.05	1.1±0.05	1.1±0.05
Hardness/ Shore A	80±2	85±2	90±2	95±2		80±2	85±2	90±2	95±2	98±2				80±2	90±2	95±2	90±2	95±2		
Hardness/ Shore D	28±2	33±2	40±2	55±2	54±2	28±2	33±2	40±2	55±2	58±2	61±2	64±2	71±2						54±2	64±2
100% Modulus kg/cm²	45±10	55±10	75±15	105±20	160±20	45±10	55±10	75±15	105±20	150±30	160±10	210±45	260±50	50±10	90±18	120±24	90±10	120±20	160±20	210±20
100% Modulus kg/cm²	80±15	115±20	125±25	140±30		80±15	115±20	125±25	140±30	250±15	255±50	300±60	310±60							
Tensile Strength kg/cm²	300±60	400±80	450±90	450±90	430±80	400±80	250±50	350±70	350±70	300±60	350±70	400±80	400±80	320±64	400±80	420±84	350±50	370±50	400±80	430±80
Elongation/ %	650±130	550±110	550±110	550±110	470±120	650±130	550±110	550±110	550±110	450±90	450±90	450±90	450±90	600±120	500±100	480±96	500±100	480±100	470±100	450±100
Abrassion Loss/ mg	50	50	50	50	50	50	50	50	50	50	50	50	50							
APPLICATION: roller tires						O	O	O	O								O	O		
bell pices for shoes									O		O	O	O							
film	O	O	O	O										O	O	O				
ski boots											O	O	O						O	O
sport shoe sole								O	O	O							O	O		
boot for motorcycling and ice hockey											O	O	O						O	O
electric cables and wire	O	O	O												O					
extrusion blow moulding	O	O												O	O					
coiled lead		O	O	O										O	O	O				
gear wheels						O	O	O	O	O										
car parts		O	O	O										O						
watch straps						O	O		O											
timing belts		O	O				O													
fire hose			O	O																
packing seal	O	O												O	O					
others		O			O					O		O	O	O			O	O	O	
EXTRUSION	O	O	O	O	O									O	O	O				
INJECTION					O	O	O	O	O		O	O	O				O	O	O	O

O Recommended Grade

General Purpose Grades of Delrin®—ASTM Data

Property	ASTM	Units	Toughest			Medium Flow			High Flow			Ulra Flow
			Delrin® D100	Delrin® D100P	Delrin® D111P	Delrin® D500	Delrin® D500P	Delrin® D511P	Delrin® D900	Delrin® D900P	Delrin® D911P	Delrin® D1700P
Compressive Stress at 10% Deflection 1.3 mm (0.05 in)/min	D695	MPa (kpsi)	—	96 (13)	104 (15)	—	107 (15)	—	—	108 (15)	115 (17)	—
TOUGHNESS Tensile Impact Strength Long Specimen	D1822	kJ/m^2 (ft·lbf/in^2)	—	570 (271)	560 (266)	—	490 (233)	500 (237)	—	440 (209)	410 (195)	—
Izod Impact Strength –40°C (–40°F)	D256	J/m (ft·lbf/in)	96 (1.8)	107 (2)	84 (1.6)	64 (1.2)	58 (1.1)	68 (1.3)	53 (1)	57 (1.1)	56 (1)	—
23°C (73°F)			120 (2.2)	120 (2.2)	96 (1.8)	76 (1.4)	75 (1.4)	73 (1.4)	70 (1.3)	69 (1.3)	59 (1.1)	59 (1.1)
Izod Impact (Unnotched) 23°C (73°F)	D4812	J/m (ft·lbf/in)	NB	NB	NB	NB	NB	NB	—	1630	2110	—
THERMAL Deflection Temperature Under Load Not annealed	D648	°C (°F)										
0.5 MPa (66 psi)			168 (334)	163 (325)	169 (336)	165 (329)	167 (333)	169 (336)	168 (334)	163 (325)	170 (338)	165 (329)
1.8 MPa (262 psi)			108 (226)	95 (203)	110 (230)	112 (234)	102 (216)	114 (237)	117 (243)	105 (221)	122 (252)	103 (217)
Deflection Temperature Under Load Annealed	D648	°C (°F)										
0.5 MPa (66 psi)			170 (338)	167 (332)	—	169 (336)	169 (336)	—	167 (333)	167 (333)	—	163 (325)
1.8 MPa (262 psi)			123 (253)	122 (252)	—	132 (270)	125 (257)	—	128 (262)	127 (261)	—	128 (262)
Melting Point (DSC)	D3418	°C (°F)	178 (352)	178 (352)	178 (352)	178 (352)	178 (352)	178 (352)	178 (352)	178 (352)	178 (352)	178 (352)
CLTE , Flow Direction 23 to 55°C (73 to 131°F)	E831	10^{-4}/K	1.22	1.2	1.21	1.1	1.13	1.2	1.06	1.26	1.16	1.04
CLTE , Trans Direction 23 to 55°C (73 to 131°F)	E831	10^{-4}/K	1.17	1.12	1.17	1.13	1.09	1.17	1.03	1.23	1.17	1.05
Thermal Conductivity	—	W/m·K (Btu·in/hr·ft^2·°F)	0.33 (2.29)	0.29 (2.01)	0.3 (2.08)	0.33 (2.29)	0.29 (2.01)	0.31 (2.15)	0.32 (2.22)	0.28 (1.94)	0.31 (2.15)	0.36 (2.50)

NY = No Yield
NB = No Break

(continued)

General Purpose Grades of Delrin®—ASTM Data

Property	ASTM	Units	Toughest			Medium Flow			High Flow			Ulra Flow
			Delrin® D100	Delrin® D100P	Delrin® D111P	Delrin® D500	Delrin® D500P	Delrin® D511P	Delrin® D900	Delrin® D900P	Delrin® D911P	Delrin® D1700P
ELECTRICAL												
Surface Resistivity	D257	ohm	5E+15	2E+14	6E+14	5E+15	2E+14	3E+14	5E+15	5E+14	6E+15	6E+14
Volume Resistivity	D257	ohm·cm	1E+15	4E+14	8E+14	1E+15	1E+14	7E+14	1E+15	2E+14	5E+14	1E+14
Dielectric Constant, 1 MHz	D150	—	3.6	3.7	3.7	3.6	3.7	3.7	3.6	3.6	3.6	3.7
Dissipation Factor, 1 MHz	D150	10^{-4}	50	50	50	50	60	50	50	60	50	50
Electric Strength 3.2 mm (0.12 in)	D149	kV/mm	16.5	16.9	18	16.5	17.3	18	16.5	17.3	18	17
FLAMMABILITY												
UL94 Rating at Min. Thickness	UL94	—	HB	HB	HB	HB	HB	HB	HB	HB	HB	HB
UL94 Min. Thickness Tested	UL94	mm (in)	0.75 (0.03)	0.75 (0.03)	0.75 (0.03)	0.75 (0.03)	0.75 (0.03)	0.75 (0.03)	0.75 (0.03)	0.75 (0.03)	0.75 (0.03)	0.75 (0.03)
MISCELLANEOUS												
Melt Flow Rate, 1.05 kg at 190°C	D1238	g/10 min	1	1	1	7	7	7	11	11	11	17
Melt Flow Rate, 2.16 kg at 190°C	D1238	g/10 min	2.2	2.2	2.2	14	15	14	25	25	25	37
Specific Gravity	D792	—	1.42	1.42	1.42	1.42	1.42	1.42	1.42	1.42	1.42	1.42
Density		g/cm^3	1.42	1.42	1.42	1.42	1.42	1.42	1.42	1.42	1.42	1.42
Rockwell Hardness	D785	—	M94 R120	M86 R119	M90 R120	M92 R120	M88 R121	M94 R123	— —	M87 R120	M91 R121	M87 R120
Water Absorption 23°C (73°F)	D570	%										
Equilibrium, 50% RH			0.22	0.28	—	0.22	0.28	—	0.22	0.28	0.2	0.28
Immersion, 24 hr			0.27	0.4	0.3	0.31	0.41	0.3	0.25	0.43	0.28	0.4
Saturation (Equilibrium)			0.9	1.4	—	0.9	1.4	—	0.9	1.4	0.97	1.4
Mold Shrinkage, 3.2 mm (0.12 in) thickness	—	%										
Flow Direction			1.8–2.1	1.8–2.1	1.8–2.1	1.7–2.0	1.8–2.1	1.5–1.8	1.7–2.0	1.6–1.9	1.4–1.7	1.4–1.7
Transverse Direction			1.8–2.1	1.7–2.0	1.7–2.0	1.8–2.1	1.8–2.1	1.6–1.9	1.7–2.0	1.7–2.0	1.5–1.8	1.5–1.8
PROCESSING GUIDELINES												
Melt Temperature Range	—	°C (°F)	210–220 (410–428)	210–220 (410–428)	210–220 (410–428)	210–220 (410–428)	210–220 (410–428)	210–220 (410–428)	210–220 (410–428)	210–220 (410–428)	210–220 (410–428)	210–220 (410–428)
Mold Temperature Range	—	°C (°F)	80–100 (176–212)	80–100 (176–212)	80–100 (176–212)	80–100 (176–212)	80–100 (176–212)	80–100 (176–212)	80–100 (176–212)	80–100 (176–212)	80–100 (176–212)	80–100 (176–212)
Processing Moisture Content, max.	—	%	0.2	0.2	0.2	0.2	0.2	0.2	0.2	0.2	0.2	0.2

NY = No Yield
NB = No Break

Mil-C-17 Coaxial Cables

Physical Characteristics:

M17 Number	Center Conductor	PTFE Dielectric Diameter	Shield	Jacket	Overall Diameter	Minimum Recommended Bend Radius	Operating Temp. (%C)	Weight (lbs./MFT)	Comments
M17/60-RG142	.037" SCCS	.116"	SPC(2)	FEP	.195"	1.0"	-55 +200	43.0	
M17/93-RG178	.0120"(7/.004")SCCS	.033"	SPC	FEP	.071"	0.4"	-55 +200	6.3	
M17/93-00001	.0120"(7/.004")SCCS	.033"	SPC	PFA	.071"	0.4"	-55 +230	6.3	M17/93-RG178 w/extended temp. range
M17/94-RG179	.0120"(7/.004")SCCS	.063"	SPC	FEP	.100"	0.4"	-55 +200	10.8	
M17/95-RG180	.0120"(7/.004")SCCS	.102"	SPC	FEP	.141"	0.7"	-55 +200	19.8	
M17/110-RG302	.0253"SCCS	.146"	SPC	FEP	.202"	1.0"	-55 +200	40.0	
M17/111-RG303	.037"SCCS	.116"	SPC	FEP	.170"	0.9"	-55 +200	31.0	
M17/112-RG304	.059" SCCS	.185"	SPC(2)	FEP	.280"	1.4"	-55 +200	94.0	
M17/113-RG316	.0201"(7/.0067")SCCS	.060"	SPC	FEP	.098"	0.5"	-55 +200	12.2	
M17/127-RG393	.094"(7/.0312")SC	.285"	SPC(2)	FEP	.390"	2.0"	-55 +200	165.0	
M17/128-RG400	.0384"(19/.008")SC	.116"	SPC(2)	FEP	.195"	1.0"	-55 +200	50.0	
M17/131-RG403	.0120"(7/.004")SCCS	.033"	SPC(2)	FEP(2)	.116"	0.6"	-55 +200	15.0	Triaxial M17/93-RG178
M17/152-00001	.0201"(7/.0067")SCCS	.060"	SPC(2)	FEP	.114"	0.6"	-55 +200	18.5	Double shielded M17/113-RG316
M17/158-00001	.037"SCCS	.116"	SPC(2)	FEP	.195"	1.0"	-55 +200	56.0	Unswept M17/60-RG142
M17/169-00001	.0120"(7/.004")SCCS	.033"	SPC	FEP	.071"	0.4"	-55 +200	6.3	Unswept M17/93-RG178
M17/170-00001	.037"(SCCS	.116"	SPC	FEP	.170"	0.9"	-55 +200	39.0	Unswept M17/111-RG303
M17/172-00001	.0201"(7/.0067")SCCS	.060"	SPC	FEP	.098"	0.5"	-55 +200	11.5	Unswept M17/113-RG316
M17/174-00001	.094"(7/.0312")SCCS	.285"	SPC(2)	FEP	.390"	2.0"	-55 +200	175.0	Unswept M17/127-RG393
M17/175-00001	.0384"(19/.008")SC	.116"	SPC(2)	FEP	.390"	1.0"	-55 +200	50.0	Unswept M17/128-RG400
M17/176-00002	.0235"(19/.005")SPA(2)	.042"	SPA	PFA	.129"	0.6"	-55 +230	18.0	Controlled impedance twinax
PTFE Tape Wrap Jacketed RG Cables									
RG 187 A/U	.0120"(7/.004)SCCS	.063	SPC	PTFE	.100"	0.5"	-55 +250	10.0	Flexible, 250° C. rated
RG 188 A/U	.0201"(7/.0067)SCCS	.060	SPC	PTFE	.100"	0.5"	-55 +250	11.0	Flexible, 250° C. rated
RG 195 A/U	.0120"(7/.004)SCCS	.102	SPC	PTFE	.141"	0.7"	-55 +250	18.0	Flexible, 250° C. rated
RG 196 A/U	.0120"(7/.004)SCCS	.034	SPC	PTFE	.067"	0.4"	-55 +250	6.0	Flexible, 250° C. rated

Electrical Characteristics:

M17 Number	Impedence (ohms)	Capacitance (pF/ft)	Max. Operating Voltage (RMS)	Maximum attenuation (dB/100ft) @ 100 MHz	400 MHz	1 GHz	3 GHz	5 GHz	10 GHz	Max Frequency (GHz)
M17/60-RG142	50 +/- 2	29.4	1900	5.5	11.7	19.0	35.0	48.0	-	17.4
M17/93-RG178	50 +/- 2	29.4	1000	16.0	33.0	52.0	94.0	-	-	3.0
M17/93-00001	50 +/- 2	29.4	1000	16.0	33.0	52.0	94.0	-	-	3.0
M17/94-RG179	75 +/- 3	19.4	1200	-	21.0	-	-	-	-	-
M17/95-RG180	95 +/- 5	16.4	1500	-	17.0	-	-	-	-	-
M17/110-RG302	75 +/- 3	19.4	2300	-	8.0	-	26.0	-	-	-
M17/111-RG303	50 +/- 2	29.4	1900	3.9	8.0	15.0	28.0	-	-	-
M17/112-RG304	50 +/- 3	29.4	3000	2.7	6.4	11.1	22.0	30.0	-	8.0
M17/113-RG316	50 +/- 2	29.4	1200	11.0	21.0	38.0	58.0	-	-	3.0
M17/127-RG393	50 +/- 2	29.4	2500	2.4	5.0	8.8	18.0	24.6	37.0	11.0
M17/128-RG400	50 +/- 2	29.4	1900	4.5	10.5	17.0	38.0	50.0	78.0	12.4
M17/131-RG403	50 +/- 2	29.4	1000	-	37.0	-	-	-	-	10.0
M17/152-00001	50 +/- 2	29.4	1200	11.5	24.0	40.0	75.0	110.0	170.0	12.4
M17/158-00001	50 +/- 2	29.4	1900	-	9.5	-		-	-	-
M17/169-00001	50 +/- 2	29.4	1000	-	29.0	-	-	-	-	-
M17/170-00001	50 +/- 2	29.4	1900	-	8.6	-	-	-	-	-
M17/172-00001	50 +/- 2	29.4	1200	-	21.0	-	-	-	-	-
M17/174-00001	50 +/- 2	29.4	2500	-	5.0	-	-	-	-	-
M17/175-00001	50 +/- 2	29.4	1900	-	10.5	-	-	-	-	-
M17/176-00001	77 +/- 7	19.0	1000	-	-	-	-	-	-	-
PTFE Tape Wrap Jacketed RG Cables										
RG 187 A/U	75 +/- 3	19.4	1200	-	21.0	-		-	-	3
RG 188 A/U	50 +/- 2	29.4	1200	11.0	21.0	38.0	58.0	-	-	3
RG 195 A/U	95 +/- 5	15.4	1500	-	17.0	-		-	-	3
RG 196 A/U	50 +/- 2	29.4	1000	-	29.0	-		-	-	-

"Maximum frequencies" are those as referenced on individual slant sheets of the MIL-C-17 specification. No values are given for unswept constructions as the specification recommends these cables should not be used above 400 MHz. (All figures referenced above are nominal unless otherwise specified.)

ACON
ADVANCED-CONNECTEK (TIAN-JIN) LTD.

中華電線電纜股份有限公司

CWCO

銅品檢驗報告表

90年12月18日

客戶		編號	90-6-86
品名	C1220T C2700T (H)	批量	Pc
規格	14.5 0.56		1/2" = 825 1/2" = 1123 Kg
依據	CNS 5127		

項目 \ 數據		標準值	實測值	備註
化學成份(%)	Cu	99.9以上		
	P	0.015～0.040		
	Cu	63.0～67.0	64.67～65.26	
	Fe	0.05以下	0.002～0.005	
	Pb	0.07以下	0.002～0.008	
物理性	抗張力	30 Kgf/mm²以上	35.30～35.05	
	伸長率	40 %以上	54～52	
	硬度			
	結晶粒度	0.04mm以下		
規格(mm)	內徑	± mm		
	外徑	14.5±0.1/0.2 mm	14.32～14.37	
	肉厚	0.56±0.05/0.07 mm	0.54～0.56	
	長度	2743± mm	2765～2767	
	長度	3048± mm	3052～3056	
	長度	± mm		
外觀	管壁內	光亮	良	
	管壁外	光亮	良	

核定： 審核： 檢檢：

Technical Data Sheet
Product 403

Worldwide Version, January 1990

PRODUCT DESCRIPTION

LOCTITE® Product 403 is a high viscosity ethyl cyanoacrylate adhesive with low odour and non-blooming characteristics.

TYPICAL APPLICATIONS

Bonding applications where vapour control is difficult.

PROPERTIES OF UNCURED MATERIAL

	Typical Value
Chemical Type	Alkoxy-ethyl cyanoacrylate
Appearance	Colourless
Specific Gravity @ 25°C	1.1
Viscosity @ 25°C, mPa.s (cP)	
Brookfield LVF	
Spindle 1-30 rev/min:	1,100 to 1,600
Flash Point (COC), °C	>80

FIXTURING TIME

This is defined as the number of seconds after assembly when a joint develops a tensile shear strength of 0.1N/mm² measured at 22°C, 50% relative humidity according to ASTM D 1002 and DIN 53283, This cure speed is affected by the nature of the substrate, ambient humidity and temperature, High cure speed is favoured by thin bond lines and by avoiding excess adhesive.

Performance of Loctite product 403 on metallic and non-metallic substrates:

Substrate	Fixture Time, seconds
Mild Steel (degreased)	30 to 70
Aluminium	5 to 20
Zinc dichromate	60 to 18
Neoprene	<5
Nitrile rubber	<5
ABS	20 to 60
PVC	20 to 50
Polycarbonate	20 to 60
Phenolic materials	30 to 60

All surtaces were cleaned by isopropyl alcohol wipe.
Times and strengths can vary considerably for different grades of plastics, rubber and plated metals.

The effect of relative humidity on cure speed is shown in the graph, for a cyanoacrylate adhesive to a Buna N rubber.

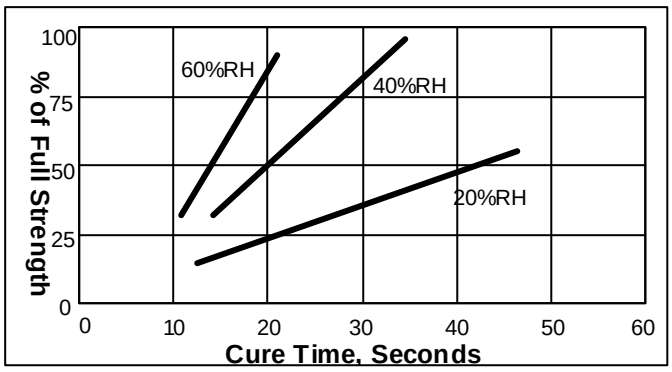

Where cure speed is inadequate, due to low relative humidity, or large gaps, a LOCTITE ACTIVATOR may be used. This can, however, lead to a reduction in eventual strength of the bond and careful testing is recommended before use in production.
While full functional strength is developed in a relatively short time, curing continues for at least 24 hours before full chemical and solvent resistance is developed.

TYPICAL PROPERTIES OF CURED MATERIAL

Physical Properties

Coefficient of thermal expansion, ASTM D696, K^{-1}	100×10^{-6}
Coefficient of thermal conductivity, ASTM C177, $W.m^{-1} K^{-1}$	0.1
Maximum gap, mm	0.05~0.25

Electrical Properties

		Constant	Loss
Dielectric constant & loss, 25°C, ASTM D150, measured at	100Hz	2 to 3.3	<0.02
	1kHz	2 to 3.5	<0.02
	10kHz:	2 to 3.5	<0.02
Volume resistivity, ASTM D257, Ω.cm $\times 10^{16}$		0.2 to 1	
Surface resistivity, ASTM D257, Ω $\times 10^{16}$		1 to 8	
Dielectric strength, ASTM D149, kV/mm		25	

PERFORMANCE OF CURED MATERIAL

(After 24 hr at 22°C)	Typical Value	Typical Range
Shear Strength, ASTM D1002, DIN 53283		
Steel, N/mm²		14 to 22
Aluminium, N/mm²		9 to 12
Zinc dichromate, N/mm²		4 to 10
ABS, N/mm²		6 to 20
PVC, N/mm²		2 to 8
Polycarbonate, N/mm²		3 to 10
Phenolic, N/mm²		5 to 15
Neoprene rubber, N/mm²		5 to 15
Nitrile rubber, N/mm²		5 to 15
Tensile Strength, ASTM D2095, DIN 53282		
Steel, N/mm²		10 to 25
Buna N rubber, N/mm²		5 to 15
Peel strength, ASTM D1876, DIN 53282, N/mm. Degreased steel:		<0.5

N.B. Ranges are based on mean $\pm 2\sigma$ values.

NOT FOR PRODUCT SPECIFICATIONS.
THE TECHNICAL DATA CONTAINED HEREIN ARE INTENDED AS REFERENCE ONLY.
PLEASE CONTACT LOCTITE CORPORATION QUALITY DEPARTMENT FOR ASSISTANCE AND RECOMMENDATIONS ON SPECIFICATIONS FOR THIS PRODUCT.
ROCKY HILL, CT FAX: +1 (860)-571-5473 DUBLIN, IRELAND FAX: +353-(1)-451 - 9959

TYPICAL ENVIRONMENTAL RESISTANCE

Test Procedure : Shear Strength ASTM D1002/DIN 53283
Substrate: Grit blasted mild steel laps
Cure procedure: 1 week at 22°C

Hot Strength

Tested at temperature.

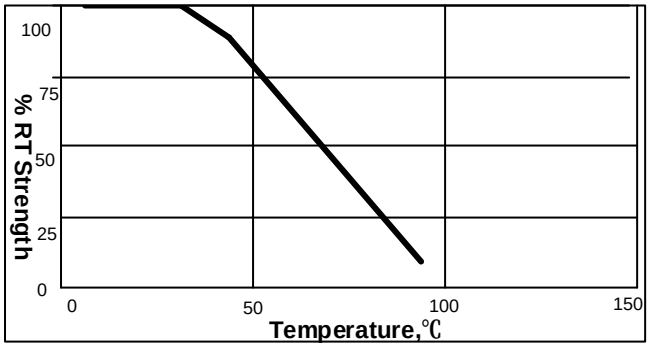

Heat Ageing

Aged at temperature indicated and tested at 22°C.

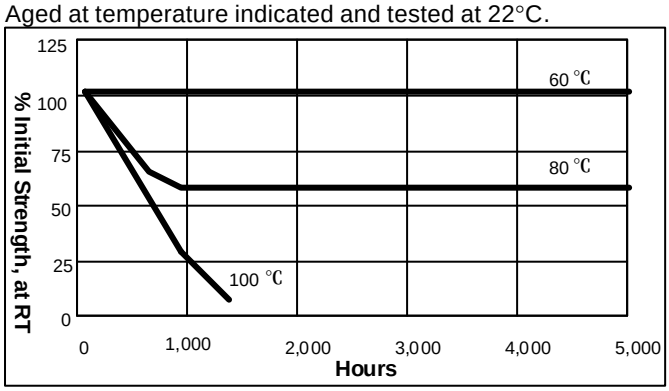

Chemical / Solvent Resistance

Aged under conditions indicated and tested at 22°C.

Solvent	Temp.	% Initial strength retained at		
		100 hr	500 hr	1000 hr
Motor Oil	40°C	75	75	65
Leaded Petrol	22°C	100	90	75
Ethanol	22°C	100	97	95
Isopropanol	22°C	90	90	90
Freon TA	22°C	100	100	100
Humidity 95% RH	40°C	15	0	0
Humidity 95% RH(polycarbonate)	40°C	95	95	95

GENERAL INFORMATION

This product is not recommended for use in pure oxygen and/or oxygen rich systems and should not be selected as a sealant for chlorine or other strong oxidising materials.

For safe handling information on this product, consult the Material Safety Data Sheet, (MSDS).

Directions for use

For best performance surfaces should be clean and free of grease. This product performs best in thin bond gaps, (0.05mm). Excess adhesive can be dissolved with Loctite clean up solvents, nitromethane or acetone.

Storage

Product shall be ideally stored in a cool, dry location in unopened containers at a temperature between 8°C to 21°C (46°F to 70°F) unless otherwise labelled. Optimal storage conditions for unopened containers of cyanoacrylate products are achieved with refrigeration: 2°C to 8°C (36°F to 46°F). Refrigerated packages shall be allowed to return to room temperature prior to opening and use. To prevent contamination of unused product, do not return any material to its original container. For specific shelf life information contact your local Technical Service Centre.

Data Ranges

The data contained herein may be reported as a typical value and/or range (based on the mean value ± 2 standard deviations). Values are based on actual test data and are verified on a periodic basis.

Note

The data contained herein are furnished for information only and are believed to be reliable. We cannot assume responsibility for the results obtained by others over whose methods we have no control. It is the user's responsibility to determine suitability for the user's purpose of any production methods mentioned herein and to adopt such precautions as may be advisable for the protection of property and of persons against any hazards that may be involved in the handling and use thereof. In light of the foregoing, Loctite Corporation specifically disclaims all warranties expressed or implied, including warranties of merchantability or fitness for a particular purpose, arising from sale or use of Loctite Corporation's products. Loctite Corporation specifically disclaims any liability for consequential or incidental damages of any kind, including lost profits. The discussion herein of various processes or compositions is not to be interpreted as representation that they are free from domination of patents owned by others or as a licence under any Loctite Corporation patents that may cover such processes or compositions. We recommend that each prospective user test his proposed application before repetitive use, using this data as a guide. This product may be covered by one or more United States or foreign patents or patent applications.