Measurement of Maximum Permissible Exposure

1. Foreword

In adopt with the Human Exposure IEEE C95.1, and according to the FCC 1.1310. The *Maximum Permissible Exposure (MPE)* is obligated to measure in order to prove the safety of radiation harmfulness to the human body.

The *Gain* of the antenna used is measured in an *Anechoic chamber*. The *maximum total power to the antenna* is to be recorded. By adopting the ***Friis Transmission Formula*** and the *power gain of the antenna*, we can find the distance right away from the product, where the limit of the MPE is.

2. Description of EUT

FCC ID	:	MSQWL120GV2A
Product name	:	Wireless Mini-PCI Module
Model	:	WL-120g V2A
Classification	:	Mobile Device (i) Under normal use condition, the antenna is at least 20cm away from the user; (ii) Warning statement for keeping 20cm separation distance and the prohibition of operating next to the person has been printed in the user's manual
Frequency Range	:	2.412 GHz ~ 2.462GHz
Supported Channel	:	11 Channels
Modulation Skill	:	DBPSK, DQPSK, CCK, OFDM
Power Type	:	Powered by mini-PCI interface

3. Limits for *Maximum Permissible Exposure (MPE)*

Frequency Range (MHz)	Electric Field Strength (V/m)	Magnetic Filed Strength (H) (A/m)	Power Density (S) (mW/cm2)	Averaging Time $\|E\|^2$, $\|H\|^2$ or S (minutes)
(A) Limits for Occupational/Controlled Exposure				
0.3-3.0	614	1.63	100	6
3.0-30	1842/f	4.89/f	$900/f^2$	6
30-300	61.4	0.163	1.0	6
300-1500	--	--	f/300	6
1500-100,000	--	--	5	6
(B) Limits for General Population/Uncontrolled Exposure				
0.3-1.34	614	1.63	100	30
1.34-30	824/f	2.19/f	$180/f^2$	30
30-300	27.5	0.073	0.2	30
300-1500	--	--	f/1500	30
1500-100,000	--	--	1.0	30

[The EUT is tested in transmit and receive modes and in the first, middle and the last channel separately. The following shows only our observation have the greatest emissions.]

According to **OET BULLETIN 56 Fourth Edition/August 1999**, **Equation for Predicting RF Fields:**

Friis Transmission Formula: $S = \frac{PG}{4pR^2} = \frac{126.77 \times 1.67}{4p\,(20)^2} = 0.021 mW/cm^2$

Estimated safe separation: $R = \sqrt{\frac{PG}{4p}} = \sqrt{\frac{126.77 \times 1.67}{4p}} = 4.10 cm$

Remarks: *"The safe estimated separation that the user must maintain from the antenna is at least 5.8cm"*

Where: S = *power density* (in appropriate units, e.g. mW/cm2)

P = *power input* to the antenna (in appropriate units, e.g., mW)

G = *power gain* of the antenna in the direction of interest relative to an isotropic radiator

R = *distance* to the center of radiation of the antenna (appropriate units, e.g., cm)

The *Numeric gain G* of antenna with a gain specified in dB is determined by:

G = Log $^{-1}$ (***dB*** antenna gain / 10)

G = Log $^{-1}$ (2.24 / 10) = 1.67

Appendix

Antenna Specification

(Antenna#1 Printed Antenna)

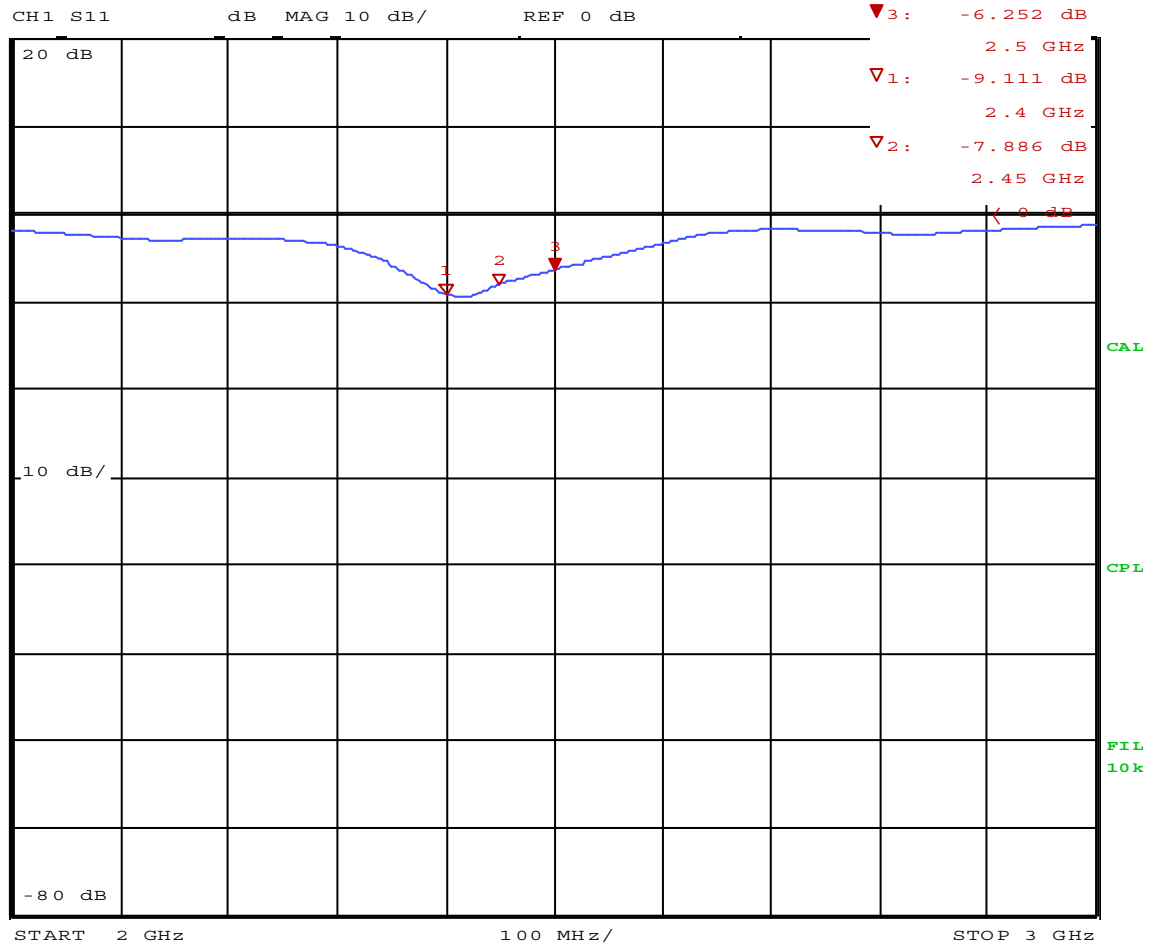

Date: 28.MAR.03 02:18:30

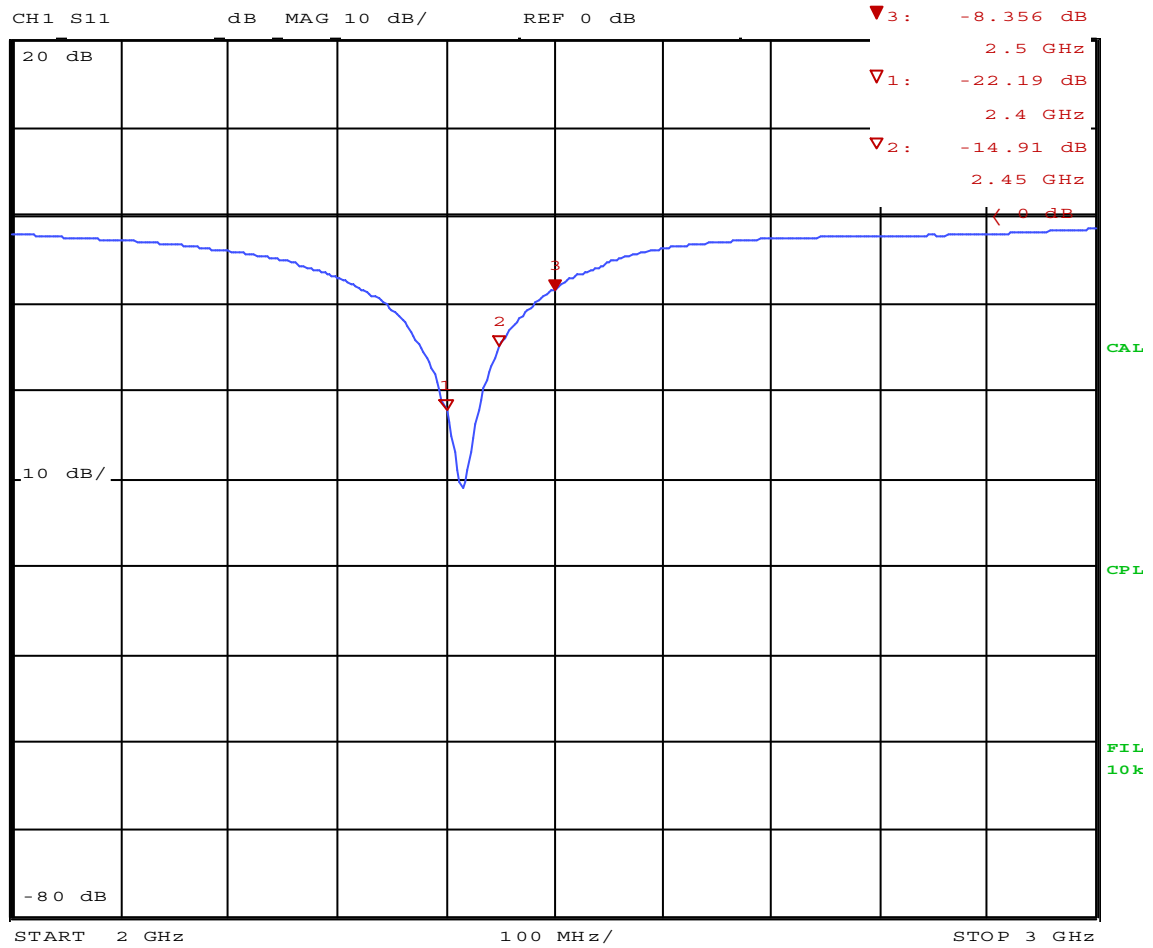

Date: 28.MAR.03 02:14:25

Model No: **WL120G-X** **Antenna Position**: Horizontal

Frequency 2450.00 **MHz**

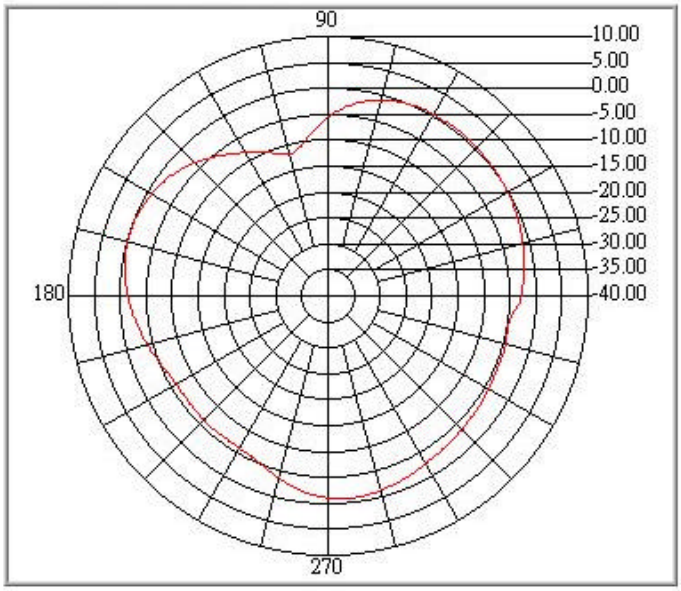

Peak: 0.55 dBi **Peak Angle:** 49.59 Degree

Average: -3.28 dBi

Test engineer:_____

Test date: 2003/4/1 at AM 08:49

Traininig Research Co., Ltd.

Tel: 02-26935155 Fax: 02-26934440

URL: http://www.trclab.com.tw

Model No: **WL120G-X** **Antenna Position**: Vertical

Frequency 2450.00 **MHz**

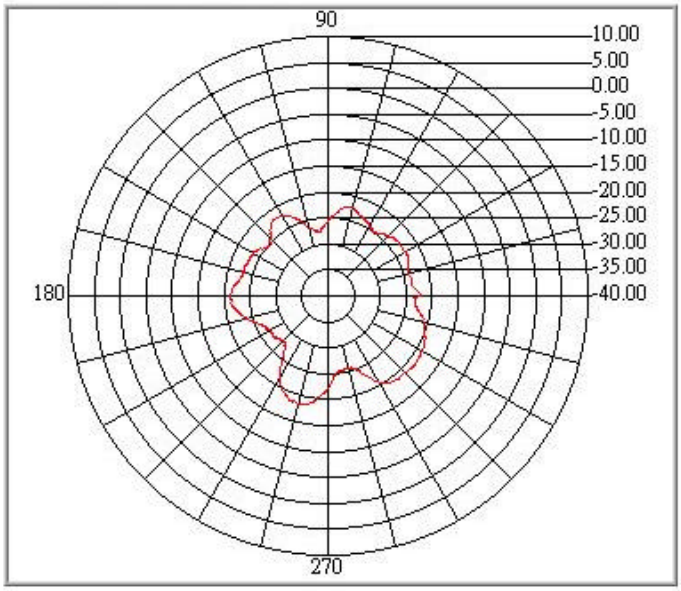

Peak: -18.39 dBi **Peak Angle**: 254.08 Degree

Average: -23.06dBi

Test engineer:_____

Test date: 2003/4/1 at AM 08:46

Traininig Research Co., Ltd.

Tel: 02-26935155 Fax: 02-26934440

URL: http://www.trclab.com.tw

Model No: **WL120G-Y** **Antenna Position**: Horizontal

Frequency 2450.00 **MHz**

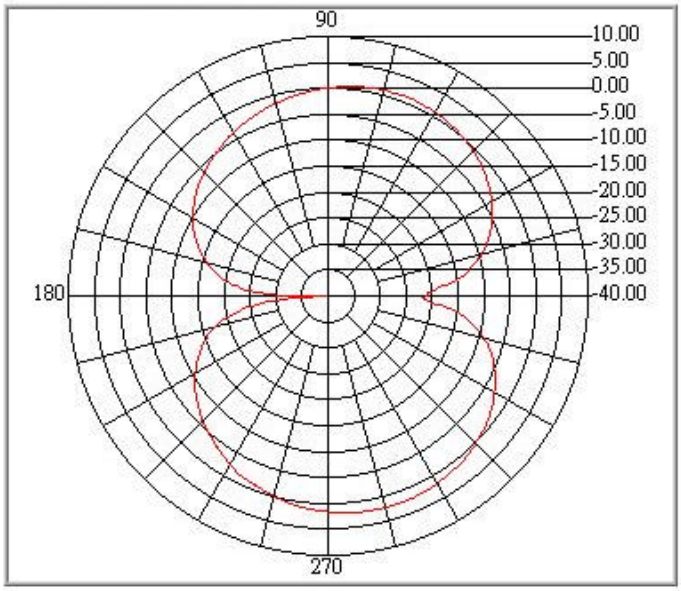

Peak: 2.24 dBi **Peak Angle**: 284.69 Degree

Average: -5.91 dBi

Test engineer:_____

Test date: 2003/4/1 at AM 08:57

Traininig Research Co., Ltd.

Tel: 02-26935155 Fax: 02-26934440

URL: http://www.trclab.com.tw

Model No: **WL120G-Y** **Antenna Position**: Vertical

Frequency 2450.00 **MHz**

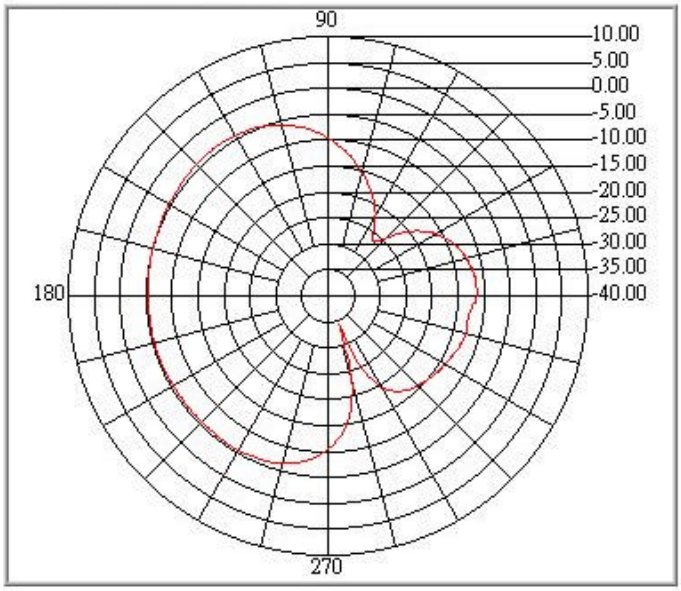

Peak: -4.04 dBi **Peak Angle:** 127.96 Degree

Average: -11.11dBi

Test engineer:_____

Test date: 2003/4/1 at AM 08:58

Traininig Research Co., Ltd.

Tel: 02-26935155 Fax: 02-26934440

URL: http://www.trclab.com.tw

Model No: **WL120G-Z** **Antenna Position**: Horizontal

Frequency 2450.00 **MHz**

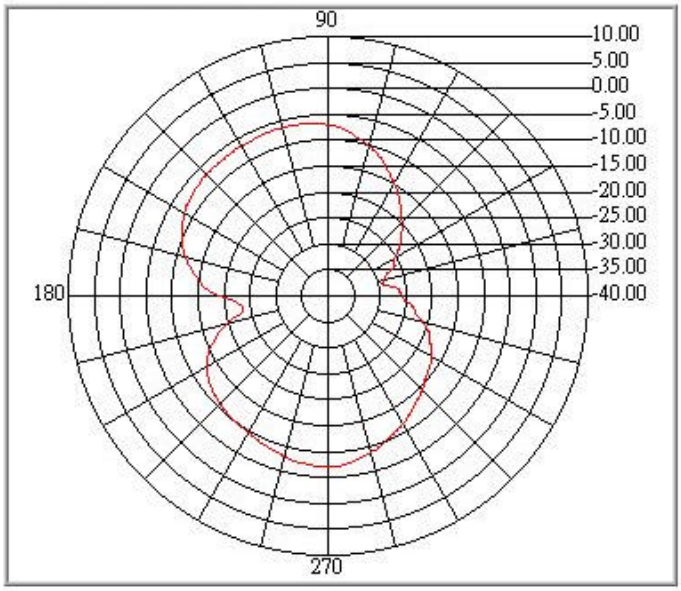

Peak: -6.37 dBi **Peak Angle:** 105.88 Degree

Average: -13.80dBi

Test engineer:_____

Test date: 2003/4/1 at AM 09:03

Traininig Research Co., Ltd.

Tel: 02-26935155 Fax: 02-26934440

URL: http://www.trclab.com.tw

Model No: **WL120G-Y** **Antenna Position**: Vertical

Frequency 2450.00 **MHz**

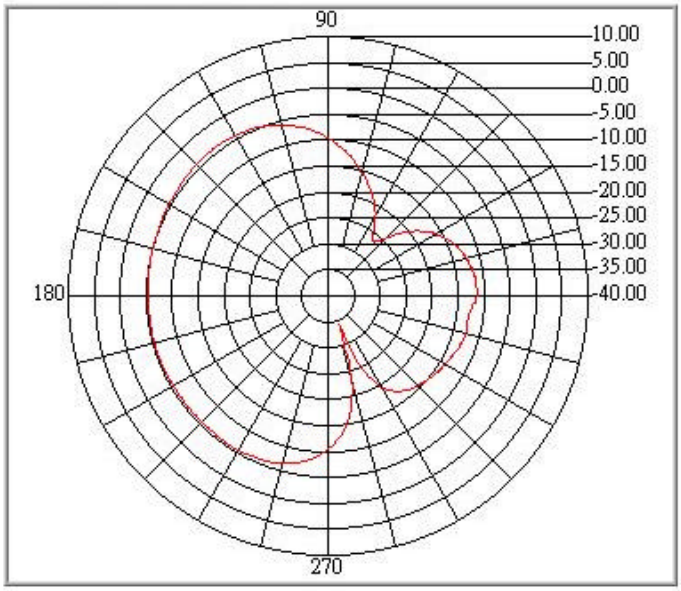

Peak: -4.04 dBi **Peak Angle:** 127.96 Degree

Average: -11.11dBi

Test engineer:_____

Test date: 2003/4/1 at AM 08:58

Traininig Research Co., Ltd.

Tel: 02-26935155 Fax: 02-26934440

URL: http://www.trclab.com.tw

Appendix

Antenna Specification

(Antenna#2 Dipole Antenna)

WHA YU INDUSTRIAL CO., LTD. (HEAD OFFICE)
TAI HWA ELECTRONIC CO., LTD.(CHINA)
SHANGHAI HUA YU ELECTRONIC CO., LTD.(CHINA
AEON TECH CO., LTD. (CHINA)

SPECIFICATION FOR APPROVAL

CUSTOMER: *華碩科技股份有限公司*

PART NAME: ***RF Antenna Assembly***

PART NO.: ***REVISION:***

W. Y. P/NO.: ***C660-510017-A*** ***REV.:*** ***X1***

	MANUFACTURER SIGNATURE	CUSTOMER SIGNATURE
APPROVED BY :	Winston	
DATE :	2004/7/2	

WHA YU GROUP

WHA YU INDUSTRIAL CO., LTD.(HEAD OFFICE)
華 裕 實 業 股 份 有 限 公 司
Address: #70 Shui Li Road, Hsin Chu City, Taiwan, R.O.C.
Tel:+886-3-5714225(REP.)
Fax:+ 886-3-5713853 · + 886-3-5723600

TAI HWA ELECTRONC CO., LTD. (CHINA)
台 樺 電 業 制 品 廠
Address: Pak Ho District, Hiu Street Town, Dong Guan City, Guangdong, China
Tel: + 86-769-5599375 · + 86-769-5912375
Fax: + 86-769-5599376

HUA HONG INTERNATIONAL LTD.
華 弘 國 際 有 限 公 司
Rm.1103A,President Commercial Centre,608 Nathan Road,Mong Kok,Kowloon,Hong Kong
Tel: + 86-852-27712210
Fax: + 86-852-23843747

SHANGHAI HUA YU ELECTRONIC CO., LTD. (CHINA)
上 海 華 裕 電 子 有 限 公 司
Address:3586,Wai Qing Song Road, Qing Pu County, Shanghai China
Tel: + 86-21-59741348 · + 86-21-59744101~4
Fax: + 86-21-59741347

SU ZHOU AEON TECH CO., LTD. (CHINA)
蘇 州 華 廣 電 通 有 限 公 司
Address:Limin North Road, LiLi Town,LiLi Industrial Park,LinHu Economic Zone
Wujiang City,Jiangsu Province,China
Tel: + 86-512-63627980
Fax: + 86-512-63627981

RF Antenna Cable Assembly

Specification

1. Electrical Properties :

1.1 Frequency Rang..... 2.4GHz ~ 2.5GHz
1.2 Impedance ..... 50Ω Nominal
1.3 VSWR ..... 1.92 Max.
1.4 Return Loss..... -10dB Maximum
1.5 Electrical Wave..... 1/2 λ Diople
1.6 Gain..... 2.0 dBi
1.7 Admitted Power..... 1W

2. Physical Properties :

2.1 Cable ..... RG-178 Coaxial Cable
2.2 Antenna Cover ..... TPE
2.3 Antenna Base ..... PC
2.4 Antenna Base Holder ..... PC
2.5 Operating Temp ..... -20℃ ~ +65℃
2.6 Storage Temp ..... -30℃ ~ +75℃
2.7 Color ..... White,DuPont Spectramaster LS033
2.8 Color Tolerance △ E..... 2 maximum
2.9 Connector ..... SMA Plug Reverse (Plated Ni)

CG-

REV	DATE	DESCRIPTION
X1	07/02-2004	New Issue

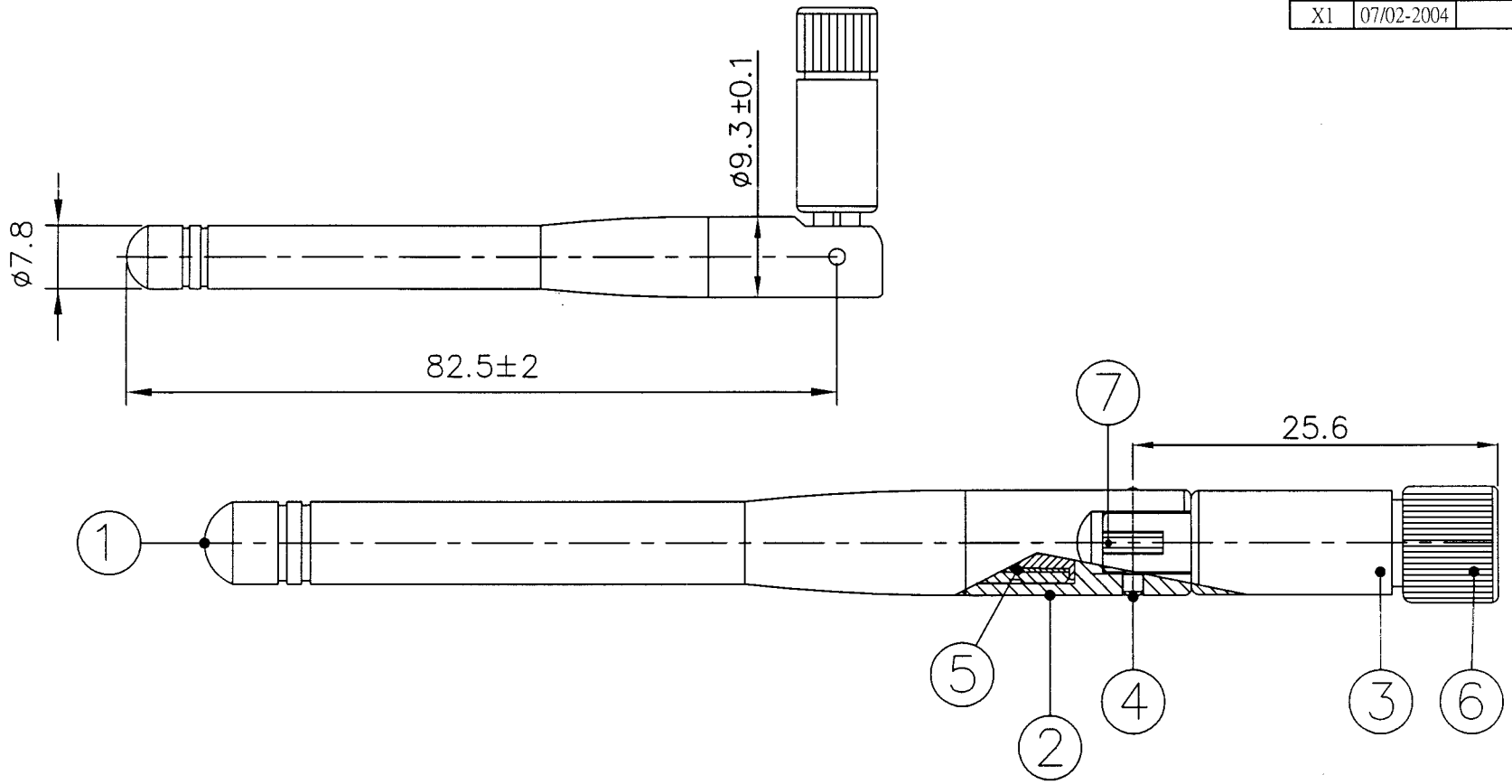

NO	DESCRIPTION		QTY	REMARK
7	Cable	RG-178 , Translucent Brown ; 50 Ω	1	
6	Connector	SMA Straight Plug/Reverse (Ni Plated)	1	
5	Ground Tube	Brass , Ni plated	1	
4	Rivet	Brass , Plated Ni	2	
3	Antenna Base	PC : Color:DuPont Spectramaster LS033	1	
2	Antenna Base	PC : Color:DuPont Spectramaster LS033	1	
1	Antenna Cover	TPE ; Color:DuPont Spectramaster LS033	1	

CUSTOMER'S SINGATURE

XX.	±5	APPROVED
X.	±1.0	
.X	±0.1	CHECKED
.XX	±0.01	
.XXX	±0.005	DRAWING

CUSTOMER: 華碩科技股份有限公司

PART NO :

PARTNAME: RF Antenna Cable Assembly

W.Y P/NO : C660-510017-A

REV	UNIT	FILE :
X1	m/m	SHEET : 1/1

Wha Yu
INDUSTRIAL CO.,LTD.
譁裕實業股份有限公司

THIS DRAWING, AND IT'S INHERANT DESIGN CONCEPTS, ARE THE PROPERTY OF WHA YU AND AS SUCH MAY NOT BE COPIED, REPRODUCED, OR GIVEN TO THIRD PARTIES WITHOUT THE WRITTEN CONSENT OF WHA YU.

譁裕實業股份有限公司
WHA YU INDUSTRIAL CO., LTD

RF Antenna Assembly

P/NO : C660-510017-A SPEC : 2.4 GHz

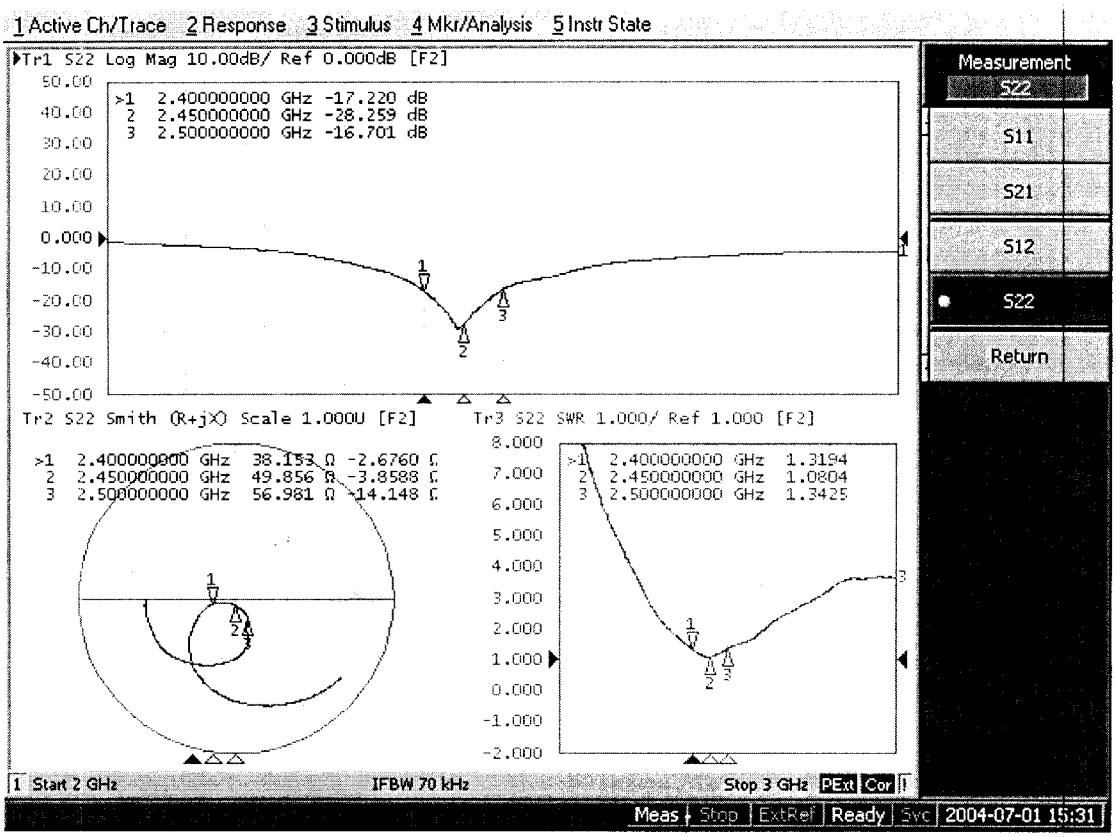

7/1/2004

華裕實業股份有限公司

WHA YU INDUSTRIAL CO., LTD

C660-510017-A

Far-field amplitude of 2.4GHz small dipole antenna-E-plane.nsi

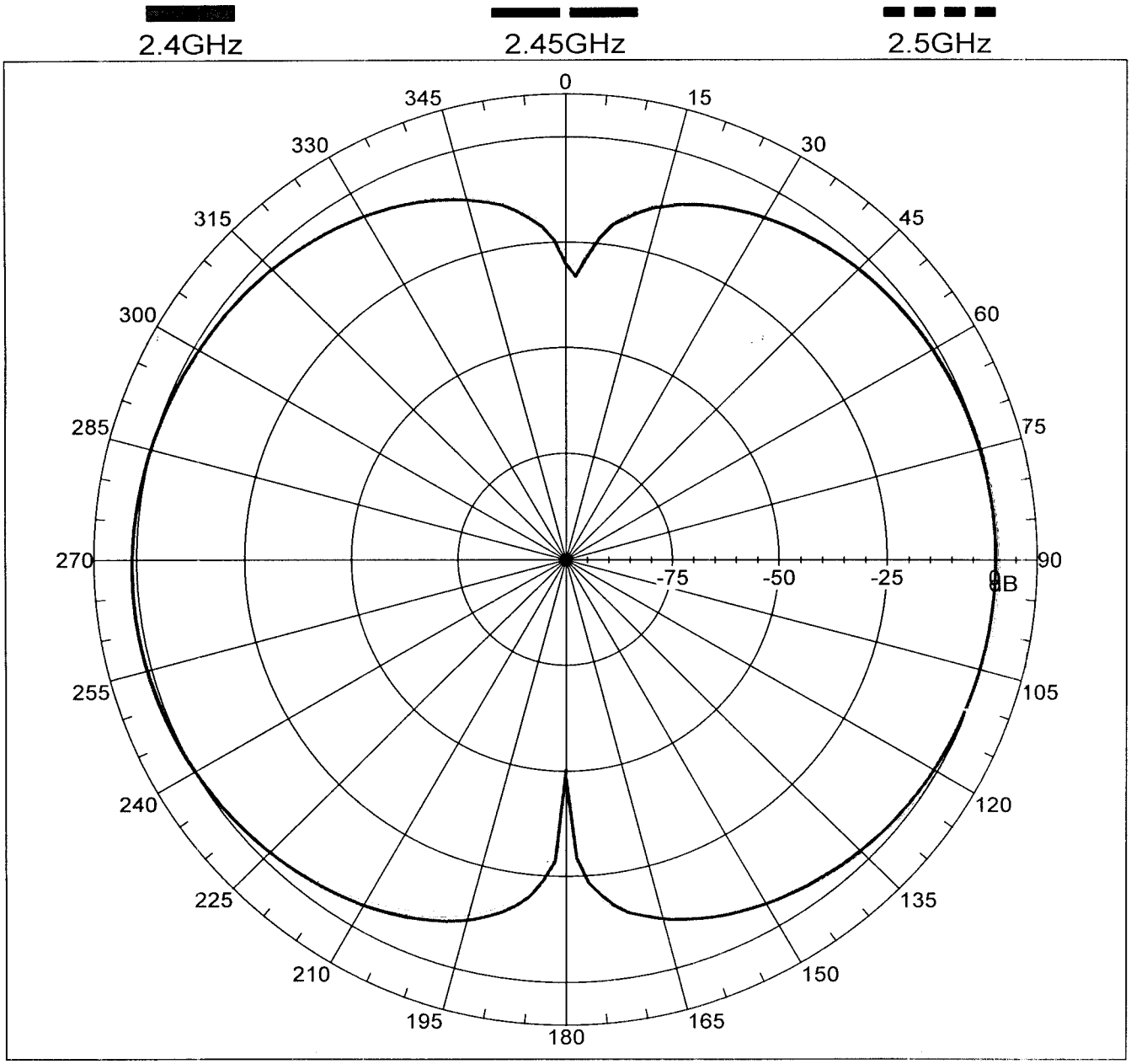

華裕實業股份有限公司

WHA YU INDUSTRIAL CO., LTD

C660-510017-A

Far-field amplitude of 2.4GHz small dipole antenna-H-plane.nsi

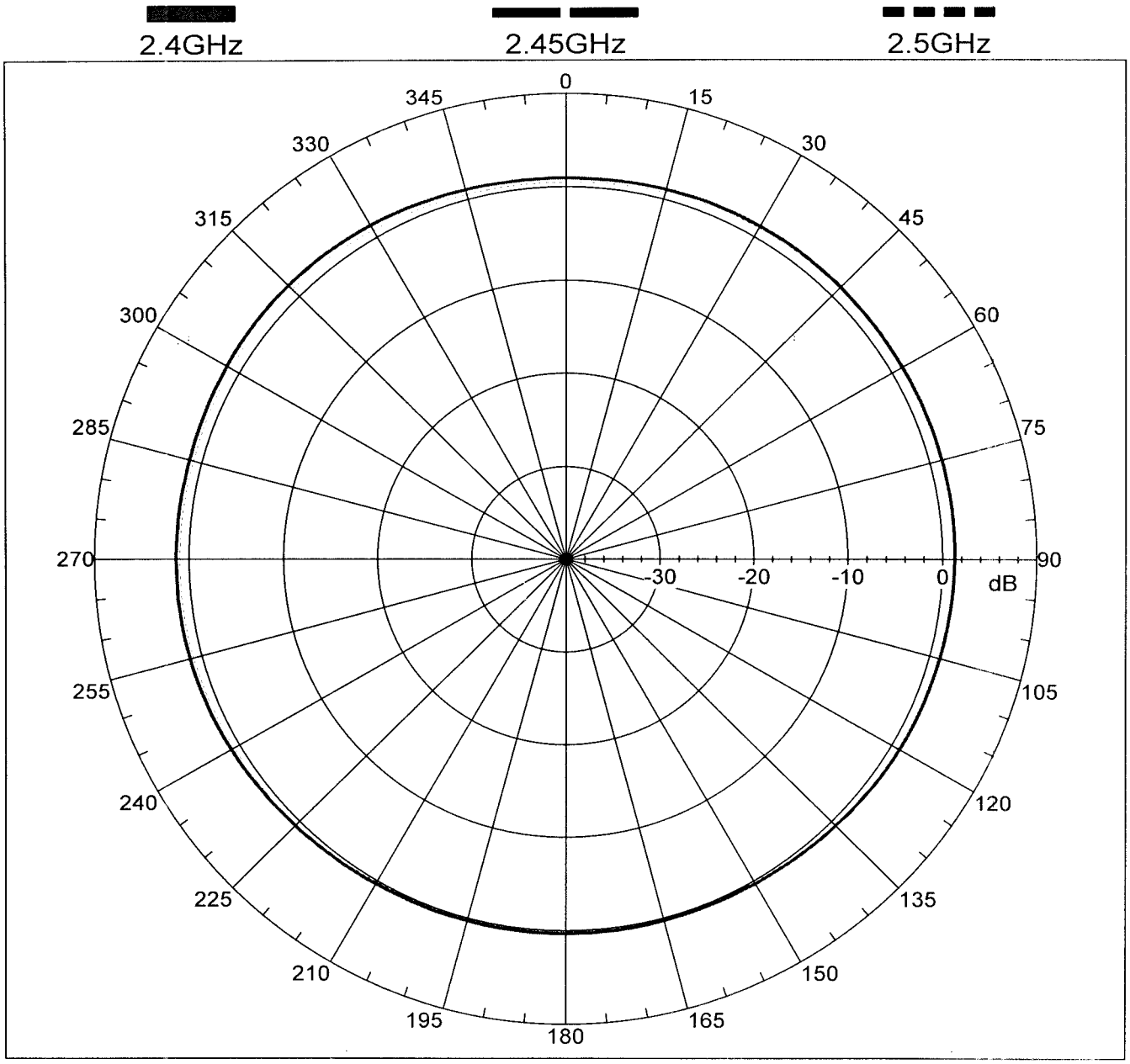

Nizing Electric Co., Ltd. 11-15 Santai Rd., Hsinchuang, Taipei Hsien, 242, Taiwan, R.O.C
Tel: 02-29016164 Fax: 29050644 E-mail: shenbinnizing@yahoo.com.tw

RG 178 B/U	FEP INSULATED HIGH-FREQUENCY COAXIAL CABLE	PAGE	1 / 2
PRODUCT STANDARD		ISSUED	21. Oct. 2003
		REVISED	

I - Scope

This specification presents a FEP insulated high-frequency coaxial cable AWG 30, 1.8 mm O.D. for internal wiring of electronic equipment, such as Computer / Notebook with wireless communication systems.

II - Construction

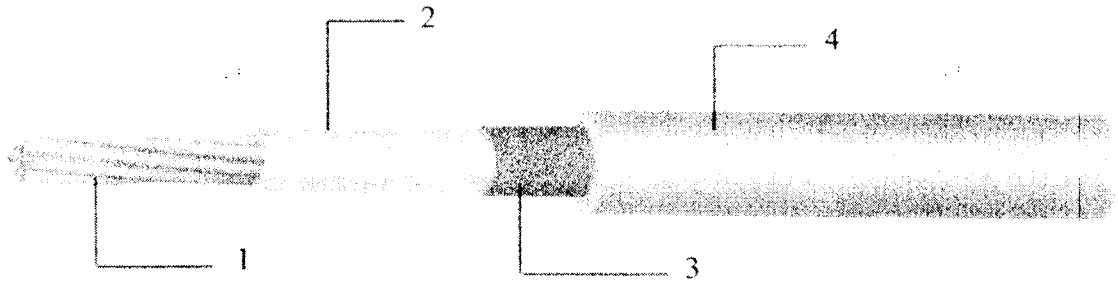

Item		Unit	Details
1. Inner Conductor	Material	—	CP-AG
	Composition	No./mm	AWG 30 or 7 × 0.1
	Dia. (approx.)	mm	0.305
2. Dielectric	Material	—	Extruded FEP
	Nom. O.D.	mm	0.84 ± 0.05
	Color	—	Natural
3. Outer Conductor	Material	—	Silver coated copper
	Composition	—	Braided (16 / 3 / 0.1)
	Dia. (approx)	mm	1.29 ± 0.07
4. Jacket	Material	—	Extruded FEP
	Dia.	mm	1.80 ± 0.08
	Color	—	Standard color is Light Orange

Note :

MADE BY	
APPROVALS	Shen Bin Chen

Nizing Electric Co., Ltd.
11-15 Santai Rd., Hsinchuang, Taipei Hsien, 242, Taiwan, R.O.C
Tel: 02-29016164 Fax: 29050644 E-mail: shenbinnizing@yahoo.com.tw

III – Characteristics

Item	Unit	Specified Value	Note
Temperature Rating	℃	-55 ~ +200	
Voltage Lasting	V	1000	
Dielectric strength	—	Dielectric core: No breakdown at AC 3 kv for 0.2 sec.	Spark test
		Jacket: No breakdown at AC 3 kv for 0.2 sec.	Spark test
Characteristic Impedance	Ω	50 ± 2	TDR method
Capacitance	pF / ft	29.4	
Attenuation. (Max.)	dB/100ft	16.0	100.0 MHz
		33.0	400.0 MHz
		52.0	1.0 GHz
		94.0	3.0 GHz
Approx. Weight	g / m	7.68	

Note		MADE BY	
		APPROVALS	Shen Bin Chao

Cable Specification

Cable : Mil-C-17 Coaxial Cable RG-178

1. Construction :

1 Conductor..... 30AWG 7/38 SCCS
2 Dielectric..... PTFE OD : 0.033"±0.002"
3 Shielded.....38AWG SPC OD : 0.051" Nominal
4 Jacket.....FEP OD : 0.071"±0.004"

2. Physical Properities :

1 Weight per 1000ft..... 6.3 lbs Maximum
2 Bend Radius.....0.35" Mininum
3 Operating Temperature Range -55℃~ 200℃

3. Electrical Properities:

1 Impedance..... 50±2 ohms
2 Capacitance..... 32 pF/ft Maximum
3 Cut off Frequency..... 116 GHz
4 Attenuation.....45.0 dB/100ft @ 1GHz
64.4 dB/100ft @ 2GHz
79.7 dB/100ft @ 3GHz
92.7 dB/100ft @ 4GHz
104.3 dB/100ft @ 5GHz
115.0 dB/100ft @ 6GHz