Measurement of Maximum Permissible Exposure

1. Foreword

In adopt with the Human Exposure IEEE C95.1, and according to the FCC 1.1310. The *Maximum Permissible Exposure (MPE)* is obligated to measure in order to prove the safety of radiation harmfulness to the human body.

The *Gain* of the antenna used is measured in an *Anechoic chamber.* The *maximum total power to the antenna* is to be recorded. By adopting the ***Friis Transmission Formula*** and the *power gain of the antenna,* we can find the distance right away from the product, where the limit of the MPE is.

2. Description of EUT

FCC ID	:	MSQWL500GD
Product name	:	Wireless Router
Model	:	WL-500G Deluxe
Classification	:	Mobile Device (i) Under normal use condition, the antenna is at least 20cm away from the user; (ii) Warning statement for keeping 20cm separation distance and the prohibition of operating next to the person has been printed in the user's manual
Frequency Range	:	2.412 GHz ~ 2.462GHz
Supported Channel	:	11 Channels
Modulation Skill	:	DBPSK, DQPSK, CCK, OFDM
Power Type	:	Powered by the Switching adapter, Mfg.: DVE Model: DSA-0101F-05 A I/P: 100-240VAC, 50/60Hz, 0.3A, 30VA O/P: +5VDC, 2.0A

3. Limits for *Maximum Permissible Exposure (MPE)*

Frequency Range (MHz)	Electric Field Strength (V/m)	Magnetic Filed Strength (H) (A/m)	Power Density (S) (mW/cm2)	Averaging Time $\|E\|^2$, $\|H\|^2$ or S (minutes)
(A) Limits for Occupational/Controlled Exposure				
0.3-3.0	614	1.63	100	6
3.0-30	1842/f	4.89/f	$900/f^2$	6
30-300	61.4	0.163	1.0	6
300-1500	--	--	f/300	6
1500-100,000	--	--	5	6
(B) Limits for General Population/Uncontrolled Exposure				
0.3-1.34	614	1.63	100	30
1.34-30	824/f	2.19/f	$180/f^2$	30
30-300	27.5	0.073	0.2	30
300-1500	--	--	f/1500	30
1500-100,000	--	--	1.0	30

[The EUT is tested in transmit and receive modes and in the first, middle and the last channel separately. The following shows only our observation have the greatest emissions.]

According to **OET BULLETIN 56 Fourth Edition/August 1999**, **Equation for Predicting RF Fields:**

Friis Transmission Formula: $S = \frac{PG}{4pR^2} = \frac{113.5011 \times 1.5136}{4p\,(20)^2} = 0.0342 mW/cm^2$

Estimated safe separation: $R = \sqrt{\frac{PG}{4p}} = \sqrt{\frac{113.501 \times 1.5136}{4p}} = 3.697 cm$

Remarks: "The safe estimated separation that the user must maintain from the antenna is at least 3.697 cm."

Where: S = *power density* (in appropriate units, e.g. mW/cm2)

P = *power input* to the antenna (in appropriate units, e.g., mW)

G = *power gain* of the antenna in the direction of interest relative to an isotropic radiator

R = *distance* to the center of radiation of the antenna (appropriate units, e.g., cm)

The *Numeric gain G* of antenna with a gain specified in dB is determined by:

$G = \text{Log}^{-1}$ (***dB*** antenna gain / 10)

$G = \text{Log}^{-1}(1.8 / 10) = 1.5136$

Appendix

Antenna Specification

WHA YU INDUSTRIAL CO., LTD. (HEAD OFFICE)
TAI HWA ELECTRONIC CO., LTD.(CHINA)
SHANGHAI HUA YU ELECTRONIC CO., LTD.(CHINA)
AEON TECH CO., LTD. (CHINA)

SPECIFICATION FOR APPROVAL

CUSTOMER: *華碩科技股份有限公司*

PART NAME: ***RF Antenna Assembly***

PART NO.: ***REVISION:***

W. Y. P/NO.: ***C660-510003-A*** ***REV.:*** ***X1***

	MANUFACTURER SIGNATURE	CUSTOMER SIGNATURE
APPROVED BY :	Winston	
DATE :	2/20/07	

WHA YU GROUP

WHA YU INDUSTRIAL CO., LTD.(HEAD OFFICE)
譁 裕 實 業 股 份 有 限 公 司
Address: #70 Shui Li Road, Hsin Chu Ciry, Taiwan, R.O.C.
Tel:+886-3-5714225(REP.)
Fax:+ 886-3-5713853 · + 886-3-5723600

TAI HWA ELECTRONC CO., LTD. (CHINA)
台 樺 電 業 制 品 廠
Address: Pak Ho District, Hiu Street Town, Dong Guan City, Guangdong, China
Tel: + 86-769-5599375 · + 86-769-5912375
Fax: + 86-769-5599376

HUA HONG INTERNATIONAL LTD.
華 弘 國 際 有 限 公 司
Rm.1103A,President Commercial Centre,608 Nathan Road,Mong Kok,Kowloon,Hong Kong
Tel: + 86-852-27712210
Fax: + 86-852-23843747

SHANGHAI HUA YU ELECTRONIC CO., LTD. (CHINA)
上 海 譁 裕 電 子 有 限 公 司
Address:3586,Wai Qing Song Road, Qing Pu County, Shanghai China
Tel: + 86-21-59741348 · + 86-21-59744101~4
Fax: + 86-21-59741347

SU ZHOU AEON TECH CO., LTD. (CHINA)
蘇 州 華 廣 電 通 有 限 公 司
Address:Limin North Road, LiLi Town,LiLi Industrial Park,LinHu Economic Zone
Wujiang City,Jiangsu Province,China
Tel: + 86-512-63627980
Fax: + 86-512-63627981

INDEX

Item	*Content*	*Page*
1.	天線規格表	1
2.	成品圖	2
3.	測試報告	3~5
4.	**Cable** 規格	6~10
5.	天線桿套材質特性	11~17
6.	天線固定座材質特性	18
7.	膠水特性及黏著力	19~23
8.	天線彎折力測試	24

RF Antenna Cable Assembly

Specification

1. Electrical Properties :

1.1 Frequency Rang..... 2.4GHz ~ 2.5GHz
1.2 Impedance ..... 50Ω Nominal
1.3 VSWR ..... 1.92 Max.
1.4 Return Loss..... -10dB Maximum
1.5 Electrical Wave..... 1/2 λ Diople
1.6 Gain..... 1.8 dBi
1.7 Admitted Power..... 1W

2. Physical Properties :

2.1 Cable..... RG-178 Cable
2.2 Antenna Cover..... TPE
2.3 Antenna Base..... PC
2.4 Operating Temp. ..... -20℃ ~ +65℃
2.5 Storage Temp. ..... -30℃ ~ +75℃
2.6 Color ..... Black
2.7 Connector..... SMA Plug Reverse

CG-

REV	DATE	DESCRIPTION
X1	02/19-2004	New Issue

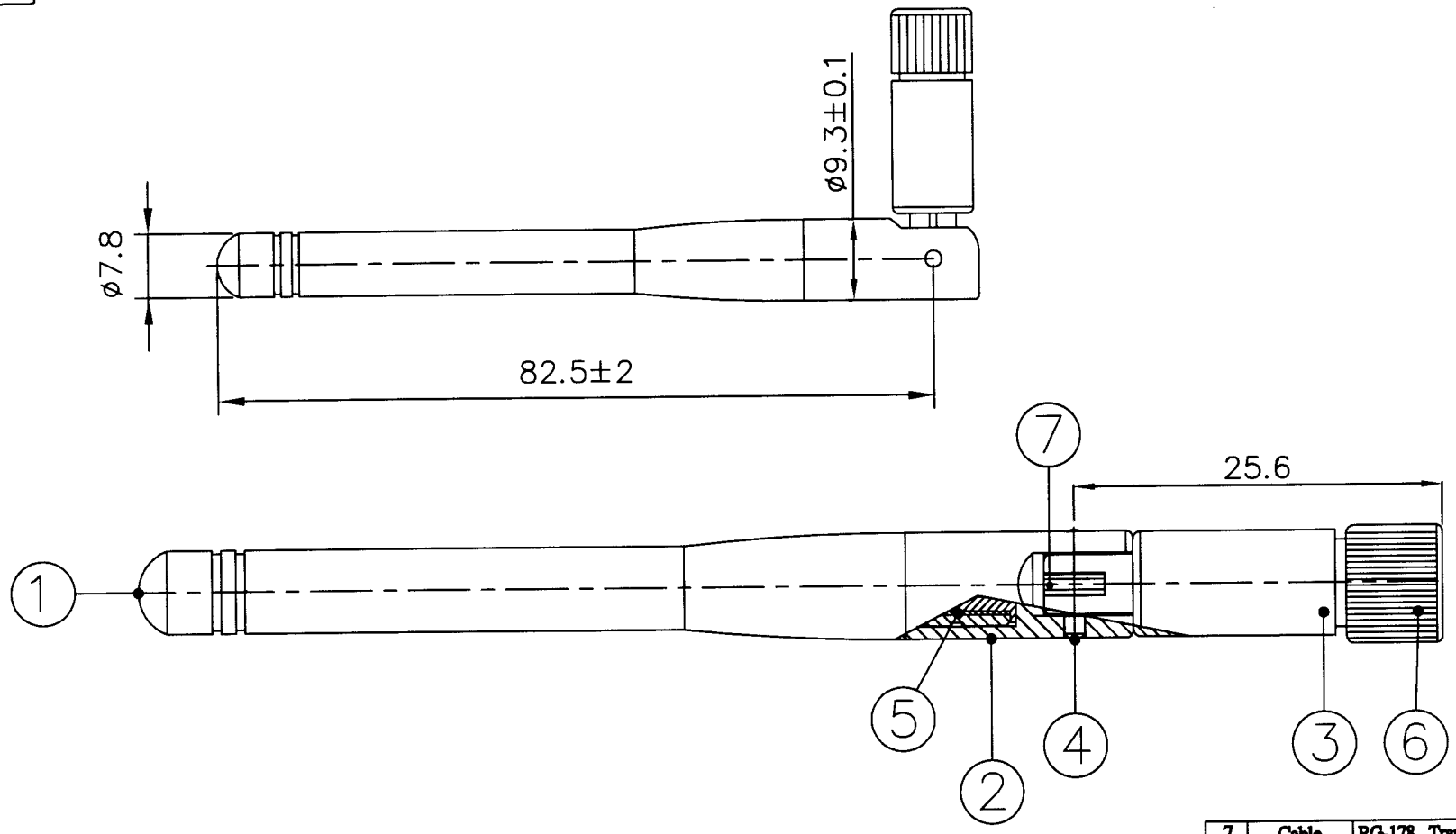

NO	DESCRIPTION		QTY	REMARK
7	Cable	RG-178 , Translucent Brown ; 50 Ω	1	
6	Connector	SMA Straight Plug/Reverse	1	
5	Ground Tube	Brass , Ni plated	1	
4	Rivet	Brass , Black Surfaced	2	
3	Antenna Base	PC ; Color:Black	1	
2	Antenna Base	PC ; Color:Black	1	
1	Antenna Cover	TPE ; Color:Black	1	

CUSTOMER'S SINGATURE

XX.	±3.0
X.	±2.0
.X	±1.0
.XX	±0.5
.XXX	±0.1

APPROVED: Winston 3/20

CHECKED:

DRAWING: Jane

CUSTOMER: 華碩科技股份有限公司

PART NO :

PARTNAME: RF Antenna Cable Assembly

W.Y P/NO : C660-510003-A

REV	UNIT	FILE :
X1	m/m	SHEET : 1/1

Wha Yu INDUSTRIAL CO.,LTD.

華裕實業股份有限公司

THIS DRAWING, AND IT'S INHERANT DESIGN CONCEPTS, ARE THE PROPERTY OF WHA YU AND AS SUCH MAY NOT BE COPIED, REPRODUCED, OR GIVEN TO THIRD PARTIES WITHOUT THE WRITTEN CONSENT OF WHA YU.

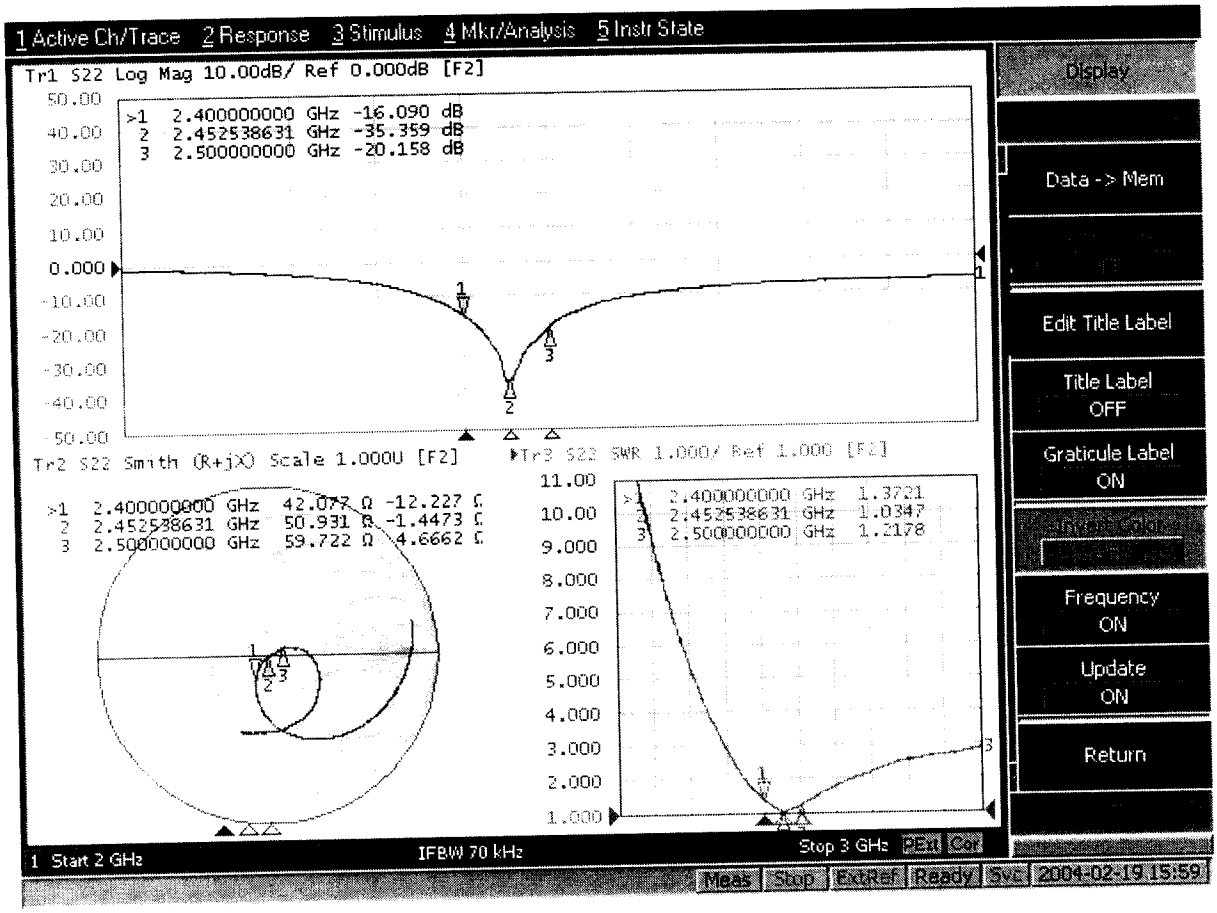
1 Active Ch/Trace 2 Response 3 Stimulus 4 Mkr/Analysis 5 Instr State
Tr1 S22 Log Mag 10.00dB/ Ref 0.000dB [F2]
>1 2.400000000 GHz -16.090 dB
2 2.452538631 GHz -35.359 dB
3 2.500000000 GHz -20.158 dB
Tr2 S22 Smith (R+jX) Scale 1.000U [F2]
>1 2.400000000 GHz 42.072 Ω -12.227 Ω
2 2.452538631 GHz 50.931 Ω -1.4473 Ω
3 2.500000000 GHz 59.722 Ω 4.6662 Ω
Tr3 S22 SWR 1.000/ Ref 1.000 [F2]
>1 2.400000000 GHz 1.3721
2 2.452538631 GHz 1.0347
3 2.500000000 GHz 1.2178
Display
Data -> Mem
Edit Title Label
Title Label OFF
Graticule Label ON
Frequency ON
Update ON
Return
1 Start 2 GHz
IFBW 70 kHz
Stop 3 GHz
Meas
Stop
ExtRef
Ready
Svc
2004-02-19 15:59

華裕實業股份有限公司

WHA YU INDUSTRIAL CO., LTD

Far-field amplitude of 2.4GHz small dipole antenna-E-plane.nsi

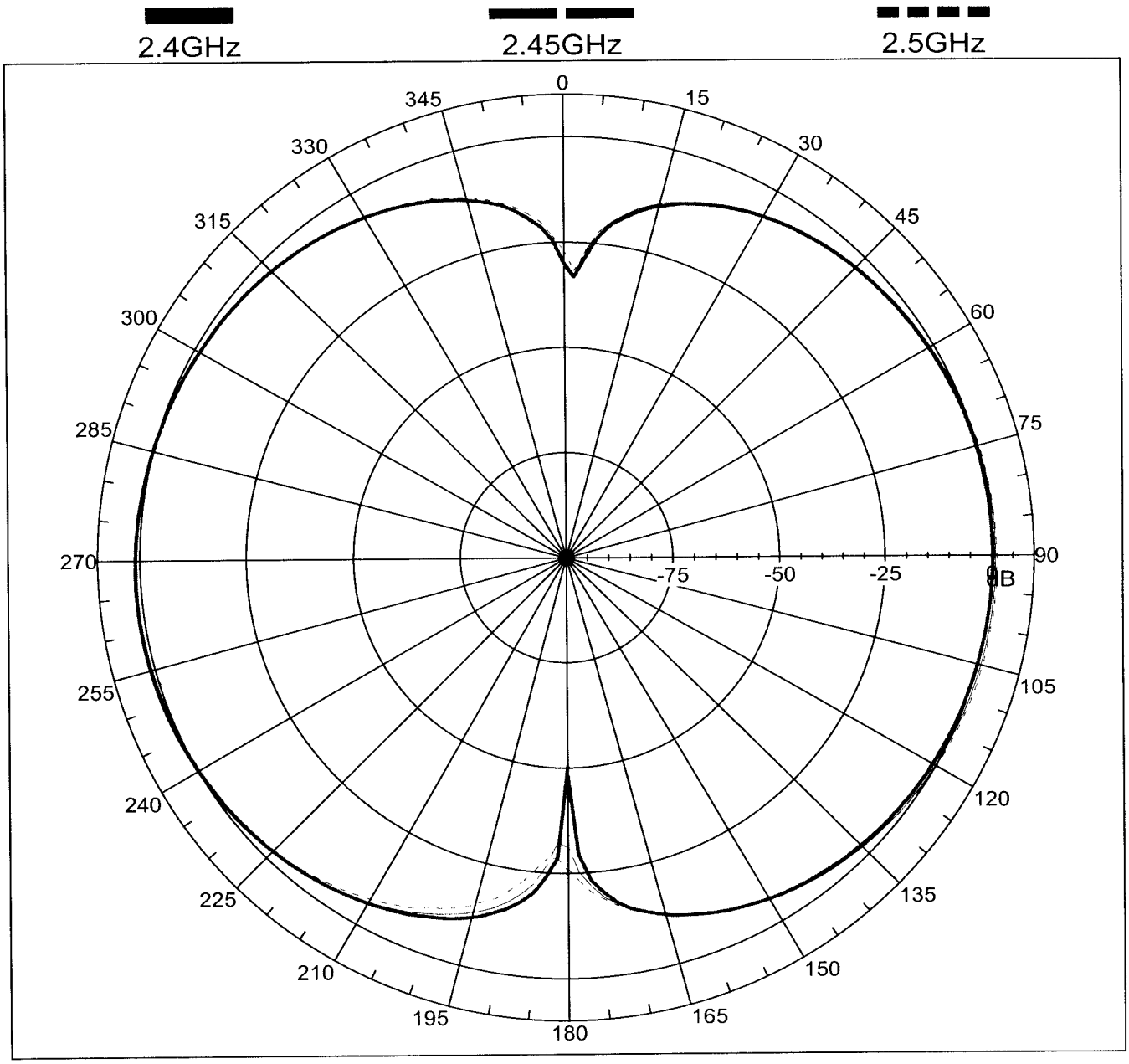

華裕實業股份有限公司

WHA YU INDUSTRIAL CO., LTD

Far-field amplitude of 2.4GHz small dipole antenna-H-plane.nsi

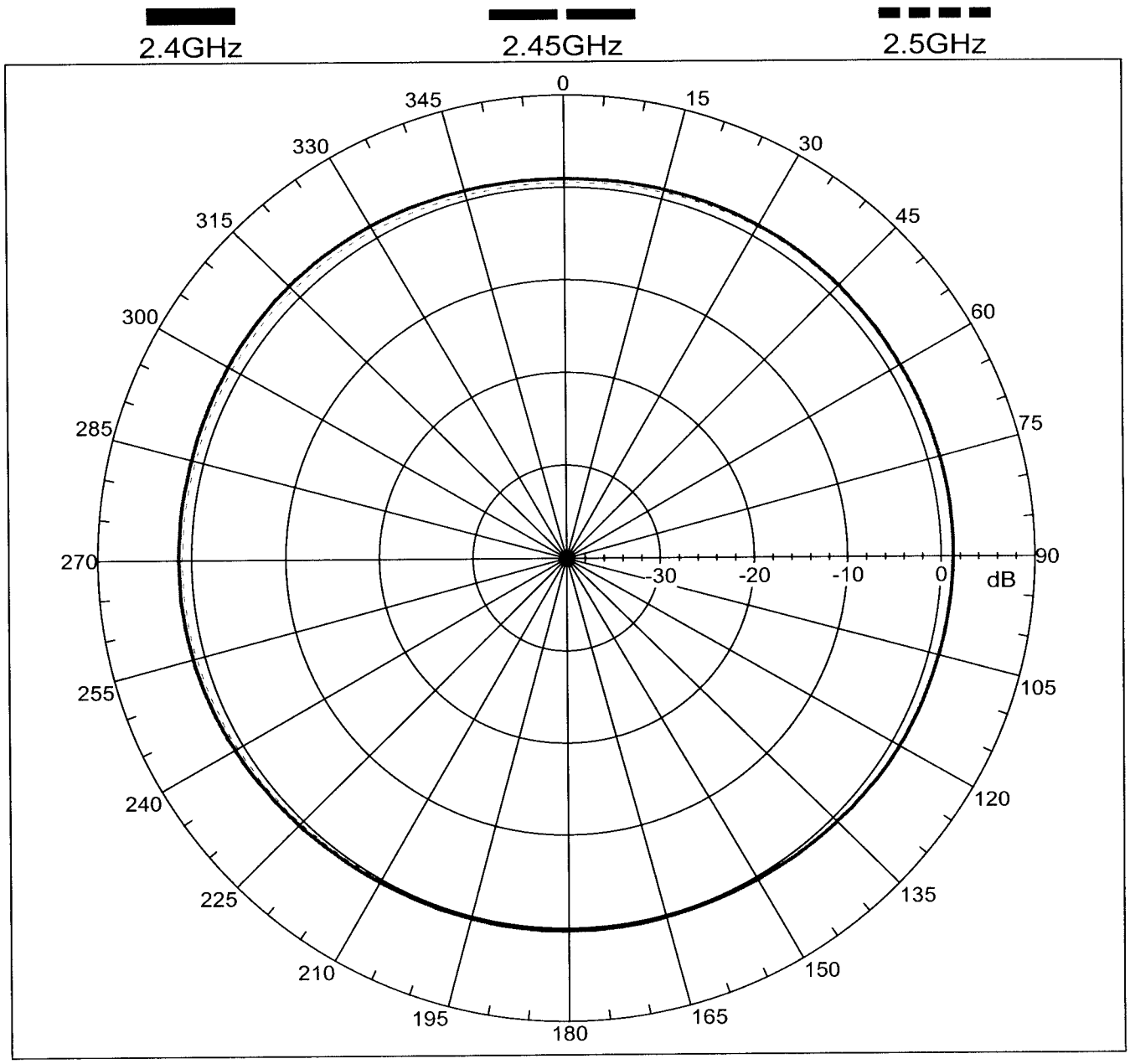

Cable Specification

Cable : Mil-C-17 Coaxial Cable RG-178

1. Construction :

1	Conductor	**30AWG 7/38 SCCS**
2	Dielectric	PTFE OD : 0.033"±0.002"
3	Shielded	38AWG SPC OD : 0.051" Nominal
4	Jacket	FEP OD : 0.071"±0.004"

2. Physical Properities :

1	Weight per 1000ft	6.3 lbs Maximum
2	Bend Radius	0.35" Mininum
3	Operating Temperature Range	-55℃~ 200℃

3. Electrical Properities:

1	Impedance	50±2 ohms
2	Capacitance	32 pF/ft Maximum
3	Cut off Frequency	116 GHz
4	Attenuation	45.0 dB/100ft @ 1GHz
		64.4 dB/100ft @ 2GHz
		79.7 dB/100ft @ 3GHz
		92.7 dB/100ft @ 4GHz
		104.3 dB/100ft @ 5GHz
		115.0 dB/100ft @ 6GHz

Mil-C-17 Coaxial Cable QPL Approved

Single braid

Double braid

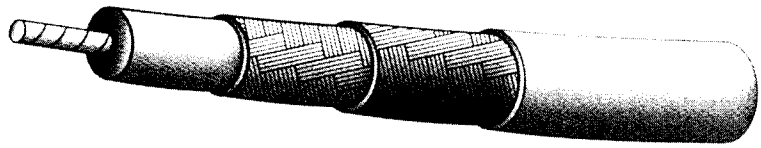

Triax

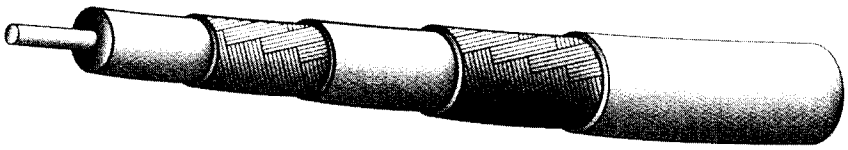

Twinax

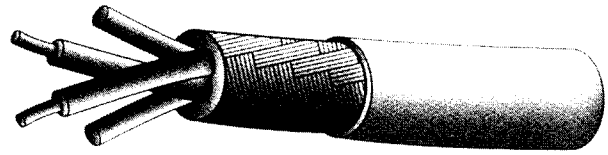

Harbour supplies a complete line of high temperature, high performance QPL approved MIL-C-17 coax cables for the military, commercial and industrial applications. The specific M17 constructions referenced are manufactured in accordance with the most recent revision of the MIL-C-17 specification. The MIL-C-17 specification defines complete physical and electrical characteristics for each M17 part number, including dimensional parameters, dielectric materials, shield construction, maximum attenuation, and VSWR levels.

VSWR Sweep Testing

When selecting a 50 ohm coaxial cable, constructions with VSWR requirements are recommended. Manufacturing and sweep testing cables with concern for VSWR ensures a quality cable free of spikes over the referenced frequency range. (Note the test frequencies specified in the electrical characteristics section.)

Precision PTFE Dielectrics

All of the high temperature, high performance coax cables listed have PTFE dielectrics with high dielectric strength and low capacitance in proportion to the dielectric constant. All PTFE dielectrics are manufactured with tolerances tighter than the MIL-C-17 specification to ensure uniformity of electrical characteristics, especially impedance, attenuation and VSWR.

Tape wrapped PTFE Constructions

Harbour also manufactures PTFE tape wrapped cables to a previous revision of the MIL-C-17 specification. These constructions can withstand operating temperatures up to 250° C. versus 200° C. for FEP jacketed cables. Also, PTFE tape wrapped cables are generally more flexible than their FEP jacketed counterparts.

UL Approvals

All of Harbour's M17 part numbers manufactured to the MIL-C-17 specification may be ordered with UL and FT4 approvals.

Mil-C-17 Coaxial Cables

Physical Characteristics:

M17 Number	Center Conductor	PTFE Dielectric Diameter	Shield	Jacket	Overall Diameter	Minimum Recommended Bend Radius	Operating Temp. (°C)	Weight (lbs./MFT)	Comments
M17/60-RG142	.037" SCCS	.116"	SPC(2)	FEP	.195"	1.0"	-55 +200	43.0	
M17/93-RG178	.0120"(7/.004")SCCS	.033"	SPC	FEP	.071"	0.4"	-55 +200	6.3	
M17/93-00001	.0120"(7/.004")SCCS	.033"	SPC	PFA	.071"	0.4"	-55 +230	6.3	M17/93-RG178 w/extended temp. ra
M17/94-RG179	.0120"(7/.004")SCCS	.063"	SPC	FEP	.100"	0.4"	-55 +200	10.8	
M17/95-RG180	.0120"(7/.004")SCCS	.102"	SPC	FEP	.141"	0.7"	-55 +200	19.8	
M17/110-RG302	.0253"SCCS	.146"	SPC	FEP	.202"	1.0"	-55 +200	40.0	
M17/111-RG303	.037"SCCS	.116"	SPC	FEP	.170"	0.9"	-55 +200	31.0	
M17/112-RG304	.059" SCCS	.185"	SPC(2)	FEP	.280"	1.4"	-55 +200	94.0	
M17/113-RG316	.0201"(7/.0067")SCCS	.060"	SPC	FEP	.098"	0.5"	-55 +200	12.2	
M17/127-RG393	.094"(7/.0312")SC	.285"	SPC(2)	FEP	.390"	2.0"	-55 +200	165.0	
M17/128-RG400	.0384"(19/.008")SC	.116"	SPC(2)	FEP	.195"	1.0"	-55 +200	50.0	
M17/131-RG403	.0120"(7/.004")SCCS	.033"	SPC(2)	FEP(2)	.116"	0.6"	-55 +200	15.0	Triaxial M17/93-RG
M17/152-00001	.0201"(7/.0067")SCCS	.060"	SPC(2)	FEP	.114"	0.6"	-55 +200	18.5	Double shielded M17/113-RG316
M17/158-00001	.037"SCCS	.116"	SPC(2)	FEP	.195"	1.0"	-55 +200	56.0	Unswept M17/60-RG
M17/169-00001	.0120"(7/.004")SCCS	.033"	SPC	FEP	.071"	0.4"	-55 +200	6.3	Unswept M17/93-RG
M17/170-00001	.037"(SCCS	.116"	SPC	FEP	.170"	0.9"	-55 +200	39.0	Unswept M17/111-RG
M17/172-00001	.0201"(7/.0067")SCCS	.060"	SPC	FEP	.098"	0.5"	-55 +200	11.5	Unswept M17/113-RG
M17/174-00001	.094"(7/.0312")SCCS	.285"	SPC(2)	FEP	.390"	2.0"	-55 +200	175.0	Unswept M17/127-RG
M17/175-00001	.0384"(19/.008")SC	.116"	SPC(2)	FEP	.390"	1.0"	-55 +200	50.0	Unswept M17/128-RG
M17/176-00002	.0235"(19/.005")SPA(2)	.042"	SPA	PFA	.129"	0.6"	-55 +230	18.0	Controlled impedar twinax
PTFE Tape Wrap Jacketed RG Cables									
RG 187 A/U	.0120"(7/.004)SCCS	.063	SPC	PTFE	.100"	0.5"	-55 +250	10.0	Flexible, 250° C rat
RG 188 A/U	.0201"(7/.0067)SCCS	.060	SPC	PTFE	.100"	0.5"	-55 +250	11.0	Flexible, 250° C rat
RG 195 A/U	.0120"(7/.004)SCCS	.102	SPC	PTFE	.141"	0.7"	-55 +250	18.0	Flexible, 250° C rat
RG 196 A/U	.0120"(7/.004)SCCS	.034	SPC	PTFE	.067"	0.4"	-55 +250	6.0	Flexible, 250° C rat

Electrical Characteristics:

M17 Number	Impedence (ohms)	Capacitance (pF/ft)	Max. Operating Voltage (RMS)	Maximum attenuation (dB/100ft) @ 100 MHz	400 MHz	1 GHz	3 GHz	5 GHz	10 GHz	Max Frequenc (GHz)
M17/60-RG142	50 +/- 2	29.4	1900	5.5	11.7	19.0	35.0	48.0	-	17.4
M17/93-RG178	50 +/- 2	29.4	1000	16.0	33.0	52.0	94.0	-	-	3.0
M17/93-00001	50 +/- 2	29.4	1000	16.0	33.0	52.0	94.0	-	-	3.0
M17/94-RG179	75 +/- 3	19.4	1200	-	21.0	-	-	-	-	-
M17/95-RG180	95 +/- 5	16.4	1500	-	17.0	-	-	-	-	-
M17/110-RG302	75 +/- 3	19.4	2300	-	8.0	-	26.0	-	-	-
M17/111-RG303	50 +/- 2	29.4	1900	3.9	8.0	15.0	28.0	-	-	-
M17/112-RG304	50 +/- 3	29.4	3000	2.7	6.4	11.1	22.0	30.0	-	8.0
M17/113-RG316	50 +/- 2	29.4	1200	11.0	21.0	38.0	58.0	-	-	3.0
M17/127-RG393	50 +/- 2	29.4	2500	2.4	5.0	8.8	18.0	24.6	37.0	11.0
M17/128-RG400	50 +/- 2	29.4	1900	4.5	10.5	17.0	38.0	50.0	78.0	12.4
M17/131-RG403	50 +/- 2	29.4	1000	-	37.0	-	-	-	-	10.0
M17/152-00001	50 +/- 2	29.4	1200	11.5	24.0	40.0	75.0	110.0	170.0	12.4
M17/158-00001	50 +/- 2	29.4	1900	-	9.5	-		-	-	-
M17/169-00001	50 +/- 2	29.4	1000	-	29.0	-	-	-	-	-
M17/170-00001	50 +/- 2	29.4	1900	-	8.6	-	-	-	-	-
M17/172-00001	50 +/- 2	29.4	1200	-	21.0	-	-	-	-	-
M17/174-00001	50 +/- 2	29.4	2500	-	5.0	-	-	-	-	-
M17/175-00001	50 +/- 2	29.4	1900	-	10.5	-	-	-	-	-
M17/176-00001	77 +/- 7	19.0	1000	-	-	-	-	-	-	-
PTFE Tape Wrap Jacketed RG Cables										
RG 187 A/U	75 +/- 3	19.4	1200	-	21.0	-		-	-	3
RG 188 A/U	50 +/- 2	29.4	1200	11.0	21.0	38.0	58.0	-	-	3
RG 195 A/U	95 +/- 5	15.4	1500	-	17.0	-		-	-	3
RG 196 A/U	50 +/- 2	29.4	1000	-	29.0	-		-	-	-

("Maximum frequencies" are those as referenced on individual slant sheets of the MIL-C-17 specification. No values are given for untwisted construction; as the specification recommends these cables should not be used above 400 MHz. (All figures referenced above are nominal unless otherwise specified.)

Nizing Electric Co., Ltd. 11-15 Santai Rd., Hsinchuang, Taipei Hsien, 242, Taiwan, R.O.C
Tel: 02-29016164 Fax: 29050644 E-mail: shenbinnizing@yahoo.com tw

A3132PS001	FEP INSULATED HIGH-FREQUENCY COAXIAL CABLE	PAGE	1 / 2
PRODUCT STANDARD		ISSUED	21. Oct. 2003
		REVISED	

I - Scope

This specification presents a FEP insulated high-frequency coaxial cable AWG 32, 1.13 mm O.D. for internal wiring of electronic equipment, such as Computer / Notebook with wireless communication systems.

II - Construction

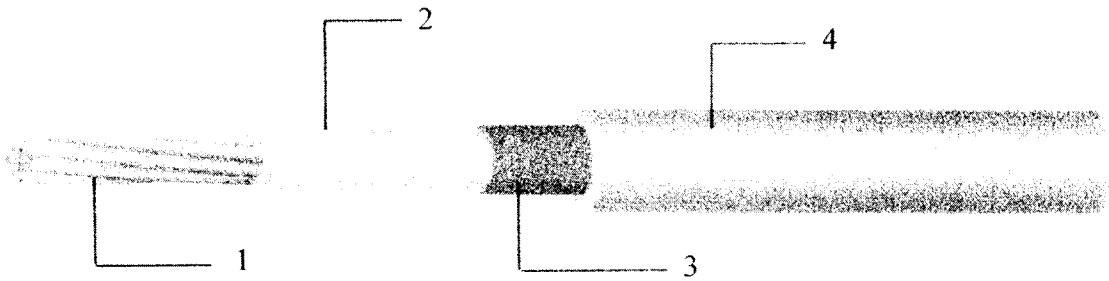

Item		Unit	Details
1. Inner Conductor	Material	—	Silver coated copper
	Composition	No./mm	AWG 32 or 7 × 0.08
	Dia. (approx.)	mm	0.24
2. Dielectric	Material	—	Extruded FEP
	Thickness	mm	0.22
	Nom. O.D.	mm	0.68 ± 0.02
	Color	—	Natural
3. Outer Conductor	Material	—	Silver coated copper
	Composition	—	Braided (16 / 4 / 0.05)
	Dia. (approx)	mm	0.90 ± 0.03
4. Jacket	Material	—	Extruded FEP
	Thickness	mm	0.10
	Dia.	mm	1.13 + 0.05 / -0.08
	Color	—	Standard colors are Light Grey, Black, Dark Grey

Note :	MADE BY	Ghoebe Liu
	APPROVALS	Shen Bin Chao

Nizing Electric Co., Ltd.
11-15 Santai Rd., Hsinchuang, Taipei Hsien, 242, Taiwan, R.O.C.
Tel: 02-29016164 Fax: 29050644 E-mail: shenbinnizing@yahoo.com.tw

III – Characteristics

Item	Unit	Specified Value	Note
Temperature Rating	℃	200	
Voltage Lasting	V	250	
Dielectric strength	—	Dielectric core: No breakdown at AC 1.5 kV for 0.15 sec.	Spark test
		Jacket: No breakdown at AC 1.5 kV for 0.15 sec.	Spark test
		No breakdown at AC 500V for 1 min.	Outer conductor to inner conductor
Inner conductor resistance	Ω / km	525	at 20℃
Insulation resistance	MΩ / km	Min. 1500	at 20℃
Characteristic Impedance	Ω	50 ± 2	TDR method
Capacitance	pF / m	98	at 1 kHz
Attenuation. (nom.)	dB / m	2.0	1.0 GHz
		2.9	2.0 GHz
		3.6	3.0 GHz
		4.2	4.0 GHz
		4.7	5.0 GHz
		5.2	6.0 GHz
Approx. Weight	g / m	3.15	

Note :

MADE BY	
APPROVALS	

天線桿套材質特性表

Units Einheiten Unites	EM400	EM460	EL550	EL630	EL740	PL380
	1.12	1.16	1.20	1.23	1.27	1.18
℃	195	185	202	212	221	197
μm/m.k	220	160	180	140	110	150
℃	\	\	110	115	120	\
℃	130	150	180	200	200	145
℃	\	50	85	115	150	\
%	0.30	0.30	0.20	0.20	0.15	0.40
%	0.75	0.70	0.55	0.60	0.90	7.0
*	HB	HB	HB	HB	HB	HB
Mpa	55	110	220	375	900	60
Mpa	4.0	7.1	13.2	20.2	26.9	3.5
Mpa	5.4	9.0	15.7	23	22.6	5.2
Mpa	8.4	11.4	16.6	22.0	26.3	8.5
Mpa	17	21	32	40	45	16
%	700	800	600	600	360	450
kj/m²	NB	NB	NB	NB	NB	NB
kj/m²	NB	NB	NB	NB	200	NB
kj/m²	NB	NB	NB	NB	9	NB
kj/m²	NB	NB	20	4	4	NB
	38	45	55	63	74	38
MV/m	\	\	\	\	\	\
Ω.cm	$5*10^{14}$	10^{14}	10^{14}	10^{14}	10^{12}	10^{12}
Ω	$>10^{13}$	$>10^{14}$	$>10^{14}$	$>10^{14}$	$>10^{10}$	$>10^{13}$
\	4.1	\	\	3.8	\	4.7
\	4.0	4.4	4.0	3.4	3.3	4.4
$x10^{14}$	10	\	\	3.8	\	310
$x10^{14}$	170	350	400	350	300	350
\	800	800	600	600	600	800
\	600	600	600	800	800	600

2.2 Product coding

The structure of the Arnitel productcodes is illustrated wirth the following example:

U M 55 1 - V

Thermoplastic elastomer type:
E = polyether ester; polyether = PTHF
P = polyether ester; polyether = PEO/PPO
U = polyester ester; (with extra urethane linkages)

Indication of viscosity range or processing technique
L, M = injection moulding and extrusion
B = blow moulding grade

Indication of hardness (Shore D)

Serial number

Indication of additives, perfomance
H = heat-stabilized
L = light/UV stabilized
V = flame-retardant (not V-0)
S = flame-retardant (V-0)

Figure 2.2: *Arnitel product coding*

2.3 Product portfolio

The Arnitel productrange is available with a hardness from 38 to 74 Shore D. The general Arnitel grades are shown in table 2.2. In order to enhance the flexibility of the portfolio a set of masterbatches (a.o. for heat, UV, etc) are on offer (refer to § 2.4).
Because of the development of these masterbatches heat stabilised Arnitel P is suggested for application areas where thermo-oxidative stability is an issue. For applications where colour and UV stability is required, the Arnitel E range is advised.

	Shore D					
	38	**40**	**46**	**55**	**63**	**74**
Arnitel E		EM400	EM460	EL550 EM550	EL630 EM630	EL740 EM740
Arnitel P	PL380		PL460	PL580 PM581		
Arnitel U				UM551 UM551-V UM552 UM552-V	UM622	

Table 2.2: *Arnitel productrange for general purpose*

Besides these multi-purpose grades, specialty grades can be offered for specific purposes and/or application areas. These grades are not intended for regular sales and are therefore restricted. Permission from marketing is needed before sampling is initiated.

	A'tel E	**A'tel P**	**A'tel U**
Automotive			
• CVJ boots	EB460 EB463 EB464		
• Boyplugs		PL380-M0	
Extrusion			
• Roofing foil	EM402-L		

Table 2.3: *Examples of specialty grades*

2.8.31 General:
Arnitel is the brand name of a series polyester based thermoplastic elastomers. These polymers combine excellent processability with good elastomeric properties between -40 and 200°C. Arnitel EL630 and EM630 are excellent materials for injection moulding and extrusion applications respectively.
The chemical stucture of Arnitel EL630/EM630 is shown below.

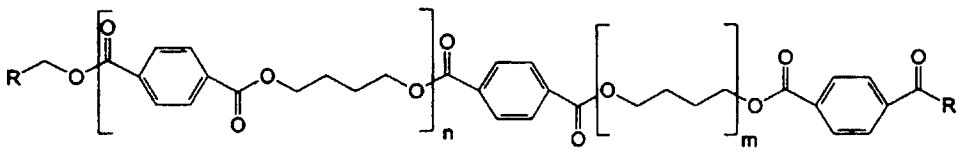

Figure 2.9: *Chemical structure of Arnitel EL630/EM630.*

Another way of writing the structure of Arnitels is shown below in Figure 2.

Figure 2.10: *Simplified structure of Arnitel EL630/EM630 .*

Arnitel EL630/EM630 is TOSCA registered (including DSL-Canada) under CAS 37282-12-5

2.8.32 Thermal properties:

- **Modulus-temperature behaviour:**

The materials have a glass transition at circa -40°C and a typical melting point at 213°C.
The modulus-temperature behaviour is shown in graph 2.76, for comparison, accompanied by other Arnitel E types.

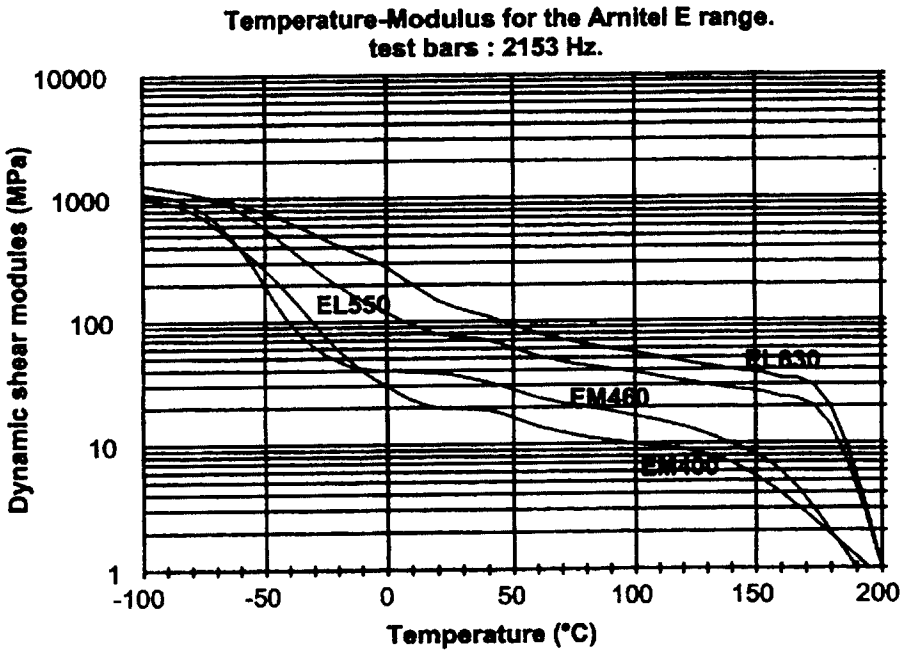

Graph 2.76: *Modulus-temperature behaviour of Arnitel EL630/EM630.*

Although information on performance at higher temperatures may be extracted from the above shown graph, a Vicat or HDT are shown in table 2.29.

analysis	SI unit	typical data	test method
Vicat A	(°C)	200	ISO 306/A
Vicat B	(°C)	125	ISO 306/B
HDT-B	(°C)	115	ISO 75-1

Table 2.29: *Vicat and HDT data on Arnitel® EL630 and EM630*

Arnitel EL630 and EM630 have a melting point of 213°C as found in the second heating curve of a DSC. The polymer will crystallize at 155°C using a 20°C/min cooling rate.
The thermal expansion coefficient of Arnitel EL630/EM630 and is $140*10^{-4}$ µm/m.K .

- **Heat aging:**

Arnitel EL630/EM630 shows an optimum between heat resistance and colour stability. Heat aging for EL630/EM630 is under test at this moment, however the data will be between EL550 and EL740. Arrhenius curves of thermo-oxidative heat aging are shown in graph 2.77. Criterium chosen is retention of 50% original elongation at break.

Heat aging of Arnitel E40D, 46D, 55D and 74D.

Natural products, Arrhenius plot.

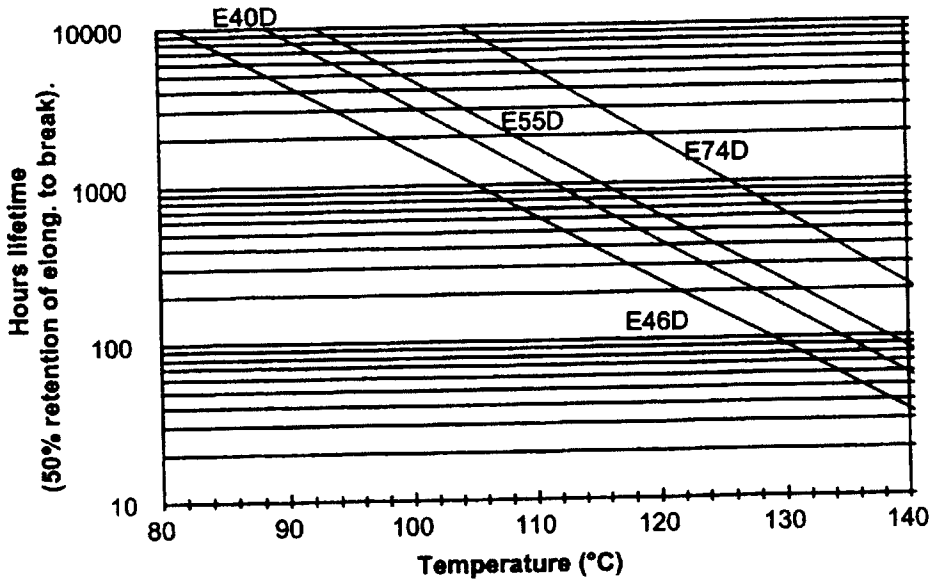

Graph 2.77: *Heat stability for Arnitel E-range.*

Heat ageing can be improve using a stabilisation masterbatch, however for heat stabilisation the P-range is preferred for it's excellence in performance. These data can be found in the Arnitel properties summary or an Arnitel P datasheet.

2.8.33 Processing and Handling:

Arnitel EL630/EM630 is a polyester with a density of 1.12 g/cm^3 according ISO 1183.
Due to the polyester nature of these materials it is of major importance to store the material dry prior to processing. Materials packaged in sealed packaging should have a moisture content lower then 500 ppm. The polymer will contain 0.12% moisture in 50% RH and 0.58% water after saturation in water. Both numbers are in equilibrium.
If samples have become wet during storage a drying step of 24 hours 120°C (or 6 hours 140°C) prior to use will prevent degradation of the material during processing combined with an eventual loss of properties. The air or nitrogen will have to have a dew point of at least -30°C.

Arnitel® EL630/EM630

- **Processing:**

Arnitel EL630/EM630 shows a single melting point at 195°C in DSC. Processing conditions are shown in the table below.

polymer	zone 1	zone 2	zone 3	additional	melt	mold
EL630	225	230	235	235	225-235	20-50
EM630	225	230	235	235	235	50

All temperatures are in °C.

Table 2.30: *Processing conditions for Arnitel EL630 and Arnitel EM630.*

- **Rheology:**

The temperature depending melt viscosity of Arnitel EL630/EM630 and are shown below in graph 2.80 and 2.81 respectively.

Shear rate dependent of the melt viscosity of Arnitel EL630. Effect of melt temperature.

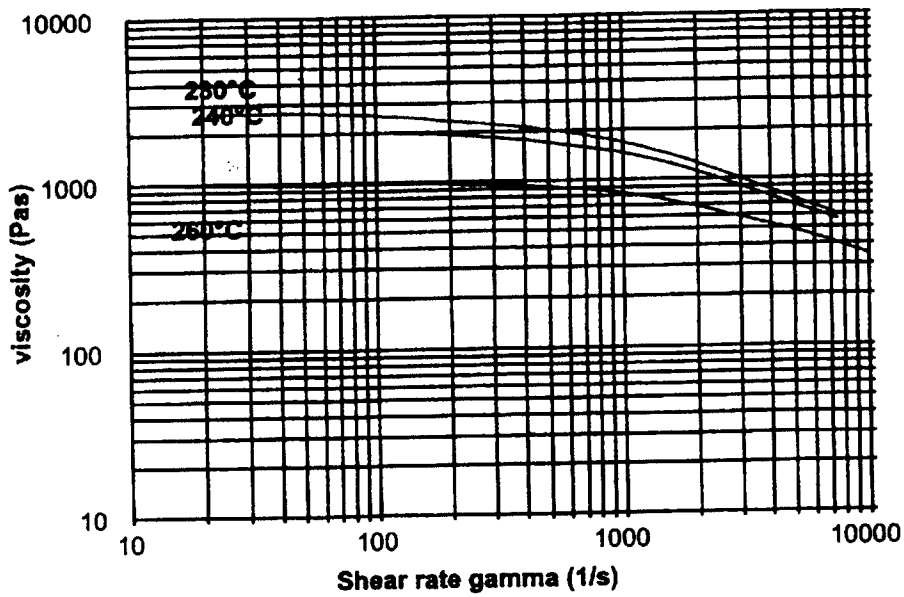

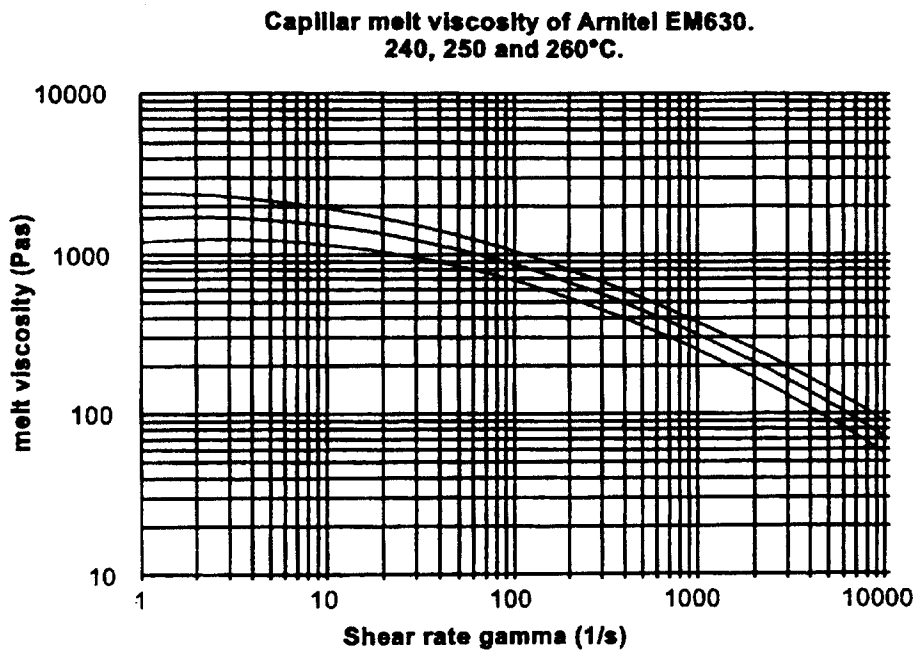

Graph 2.80 and 2.81: *Temperature dependancy of the melt viscosity for Arnitel EL630 and EM630 .*

The MFI values are shown in table 2.31.

		EL630	EM630	
MFI 230°C	g/10 min		7	ISO 1133
MFI 240°C	g/10 min	30		ISO 1133

Table 2.31: *MFI for Arnitel EL630/EM630.*

- **Use of regrind:**

Arnitel can readily be recycled. If the MFI of the regrind is up or down to four points higher, 20% can be recycled. A difference of 2 MFI points allows up to 50% of regrind. Obviously the regrind should be dried properly before use.

2.8.34 Mechanical properties:

If Arnitel EL630 or Arnitel EM630 are processed properly the materials will have mechanical properties as shown in table 2.32.

Mechanical property	SI Unit	typica data*		test method
		EL630	EM630	
Hardness	Shore D	63	63	ISO 868
Tensile modulus (1 mm/min)	MPa	330	330	ISO 527
Tensile strength (50 mm/min)	MPa	30	30	ISO 527
Strain at break	%	350	350	ISO 527
Tensile stress at 5% strain	Mpa	11.5	11.5	
Tensile stress at 10% strain	Mpa	15.9	15.9	
Tensile stress at 50% strain	Mpa	17.3	17.3	
Tear strength Graves	KN/m	145	145	DIN53515
Izod notched 23°C (73°F)	KJ/m^2	NB	NB	ISO 180/1A
Izod notched -30°C (-22°F)	KJ/m^2	4	4	ISO 180/1A
Charpy notched 23°C (73°F)	KJ/m^2	NB	NB	ISO 179/1eA
Charpy notched -30°C (-22°F)	KJ/m^2	12	12	ISO 179/1eA

Data for dry natural materials.
*1 NB: No Break

Table 2.32: *mechanical properties of Arnitel® EL630.*

- **Abrasion:**

Arnitels show good abrasion resistance in both Taber and DIN 53516 abrasion tests. Data are shoen in the Arnitel general property overview (also included in the EPIC)

2.8.35 Flame retardancy:

Arnitel EL630 and EM630 show in an ISO1210/A flammability test a burning rate leading to a classification FH-1. Flame retardancy can be improved using a halogenated or halogen free FR masterbatch.

2.8.36 Electrical properties:

Arnitel EL630/EM630 can be used for cable jacketting applications. If the material is in permanent contact with copper a copper stabilisation package should be added. If the copper wires are coated with a tin layer, no stabilisation is necessary. The electrical properties are shown in table 33.

Electrical property	SI Unit	typica data*		test method
		EL630	EM630	
Dielectric strength	KV/mm	22	22	IEC 243-1
Relative permittivity (ε_r) at 1 kHz	-	4.4	4.4	IEC 250
Dissipation factor (tan δ) at 1kHz	-	0.019	0.019	IEC 250
Comparative tracking index	-	600	600	IEC 112
Volume resistivity	$10^{14}\Omega$.cm	1	1	IEC 93
Surface resistivity	$10^{14}\Omega$	1	1	IEC 93

Table 2.33: *Typical electrical properties of Arnitel® EL630 and EM630.*

2.8.37 Chemical resistance:

Arnitel EL630 and EM630 are sensitive to strong bases and strong acids, especially at elevated temperatures. In some halogenated hydrocarbons (like tetrachloroethane), the materials (partially) dissolves. For a full review on chemical resistance of Arnitel EL630 and EM630 request the chemical resistance brochure.

- **Hydrolysis**

Like all polyesters Arnitel are sensitive to moisture, however Arnitels are more stable to water then e.g. PET and PBT. graph 2.84 shows the hydrolytic stability of Arnitel EL630 at 100°C and in steam (120°C). For improved hydrolysis stability, using a polycarbodiimid containing masterbatch like Stabaxol® in an option. To maintain all other properties use a masterbatch based on polyester.Data on the Stabaxol stabilised grade are shown in graph 2.85.

■Panlite L-1250Z

Category	Unit	Test Method	Condition	L-1250Z 100
Melt volume flow rate	cm^3/10min	ISO 1133	300℃ load 1.2kg	8
Density	kg/m^3	ISO 1183	—	1200
Water absorption rate	%	ISO 62	in water 23℃24h	0.2
Light transmission	%	ASTM D 1003	thickness 3mm	88
Refractive index	—	ASTM D 542	—	1.585
Tensile modulus	MPa	ISO 527-1 and ISO 527-2	1mm/min	2400
Tensile stress at yield	MPa		50mm/min	61
Tensile strain at yield	%		50mm/min	6
Nominal tensile strain at break	%		50mm/min	>50
Flexural modulus	MPa	ISO 178	2mm/min	2350
Flexural strength	MPa		2mm/min	93
Charpy impact strength	KJ/m^2	ISO 179	unnotched	NB
			notched	76
Heat deflection temperature	℃	ISO 75-1 and ISO 75-2	1.80MPa	129
			0.45MPa	142
Vicat softening temperature	℃	ISO 306	50℃/h 50N	149
Mold shrinkage	%	In-house method	parallel	0.5～0.7
			vertical	0.5～0.7
Coefficient of linear expansion	$\times 10^{-4}$/℃	ISO 11359-2	parallel	0.7
			vertical	0.7
Specific inductive capacity	—	IEC 60250	100Hz	3.1
	—		1MHz	3
Dielectric loss tangent	$\times 10^{-4}$	IEC 60250	100Hz	10
	$\times 10^{-4}$		1MHz	90
Volume resistivity	Ω・m	IEC 60093	—	$>1\times10^{13}$
Surface resistivity	Ω	IEC 60093	—	$>1\times10^{15}$
Withstand voltage	MV/m	IEC 60243-1	short time test	30
Tracking resistance	—	IEC 60112	—	250
Flammability	—	UL 94	—	V-2(0.40mm) HB(1.5mm)
Temperature index	℃	UL 746B	electric 1.47mmt	125
			impact 1.47mmt	115
			non-impact 1.47mmt	125

※The values listed are specification values, not certified values.

Two-part adhesive		1590	High Super 5	EP-330 (HighSuper30)	EP-331	1500	Super
Feature		curing for 5 min type		curing for 30 min type	curing for 30min type Low-viscosity	Standard type	
Appearance	Base	Clear, blue	Translucent, blue	Translucent, pink	Clear, light yellow	Clear, light yellow	Translucent
	Hardener	Clear ight yellow	Translucent, light yellow	Translucent, milk white	Clear, light yellow	Clear, light brown	Light yellow
Viscosity (Pa・S/20℃)	Base	8	120	80	7	25	100
	Hardener	12	70	170	7	60	50
Specific gravity (g/cm^2)	Base	1.17	1.17	1.17	1.16	1.16	1.14
	Hardener	1.11	1.15	1.14	1.16	0.97	0.99
Mixing ratio(Base : Hardener)		1 : 1	1 : 1	1 : 1	1 : 1	1 : 1	1 : 1
Pot life		Within 5 min	Within 5 min	Within 30 min	Within 30 min	Within 1 hr	Within 1 hr
Tensile shear stength(N/mm^2)		19.0	18.0	17.5	17.6	15.7	15.1
T-Formed peeling adhesion (N/mm)		2.71	0.31	0.47		0.40	
Hardness(shore D)		77	77	82	71	82	
Coefficient of linear expansion ($\times 10^{-5}$)		8.6	10.7	6.7	4.1	7.1	
Tg(℃)			47	43		53.7	
Volume resistivity(Ω・cm)			4.9×10^{15}	3.8×10^{11}	3.6×10^{11}	1.1×10^{16}	
Coefficient of water absorption(%)			2.5	2.3		0.8	
Capacity standards		Base 1 kg Hardener 1 kg	6 g set 15 g set 25 g set 80 g set	320 ml set Base 3 kg Hardener 3 kg 6 g set, 15 g set, 80 g set	Base 1 kg Hardener 1 kg	Base 500 g, 1 kg, 3 kg, 15 kg Hardener 500 g, 1 kg, 3 kg, 15 kg	15 g set 40 g set 110 g set

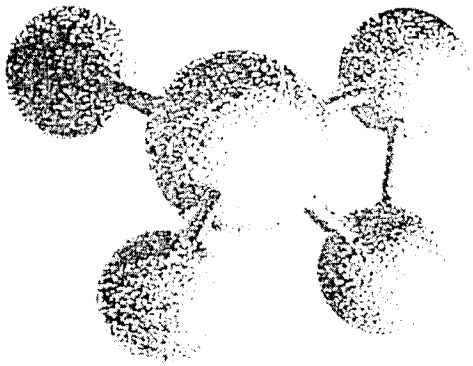

施敏打硬
CEMEDINE
1500

〔一般性質〕

	主　　劑	硬　化　劑
主要成分	環氧（Epoxy）樹脂的中間體淺黃色透明液體	聚醯胺（Poly-Amido）樹脂淺色透明液體
顏色常態		
不揮發率（%）	99.6	99.4
黏度(9/20°C)	350	600
比重(20/20°C)	1.16	0.97
溶　　劑	無	
硬化劑混合比例phr	60～110	
保持黏度時間	參照混合硬化劑後的黏度變化表	
膠化時間	3小時	
硬化所需時間	6小時10分鐘	
可保存時間（20°C）	2年	

〔特性〕

由兩種液體混合而成的環氧（Epoxy）樹脂系黏著劑，能在常溫下硬化，應用範圍至為廣汎，可穩定黏著金屬、塑膠以及其他各種物質。而由於此黏著劑，通常以聚醯胺（Poly-Amido）樹脂爲其硬化劑，具有下列各優點：

1. 能在常溫下硬化。
2. 縱使所使用的硬化劑份量不同，也不影響其特性。
3. 由於能產生比一般黏著劑富有彈曲性的黏著層，故使黏著不同材質的物品，也能以黏著層緩和熱膨脹的差別所引起的兩物品彎曲，對機械學的衝擊也能顯示較爲良好的性能。
4. 由於能形成透明的黏著層，可以黏著透明的物質，如玻璃等等。

〔用　途〕

由於能強力黏著各種物質，諸如金屬，熱硬化塑膠，玻璃，機械裝配以及一般家庭器具等等，應用範圍至為廣汎。

縱然是聚乙烯（Polythylene），聚酯（Polyester），矢然以及人造橡膠等，以一般的黏著根本無法黏著的物質，如果加以適當的表面處理，即可強力黏著。

〔實　例〕

汽車、火車、船隻、飛機……。（將金屬把手黏著於玻璃窗／可以黏著船製品，三聚氰胺（Melamine）裝飾板等，於內部以增加強度／不同金屬間爲象防止電傷且加鉚之／當作防腐塗料亦可）。

電器製品……。（由於是一種優秀的黏著劑，使用於高熱機器、音響線圈的黏著／電磁器或外殼的黏著／線圈框的黏著／鐵粉芯的黏著／馬達線圈的黏著等等）。

建築……（玻璃、壓克力門皮將文字板黏於屋頂黏住把手／熱水設備以及其他塑膠裝飾品的加黏及組立／不銹鋼製品、鋁製建材、陶器或大理石等需要強力黏劑物品的加黏）。

高級裝飾品，玻璃以及塑膠製工藝品，精密機械……（成機械，調整距離值／分光器等等的調節）。

其他諸如鞋頭，運動器材，公路標誌等等的加強。

除上述各種加黏外，也可以使用作填充劑，鑄模用，敷層用以及接著用。

主　劑	硬化劑
50 g	120 g
50 g	60 g
100 g	60 g
100 g	40 g

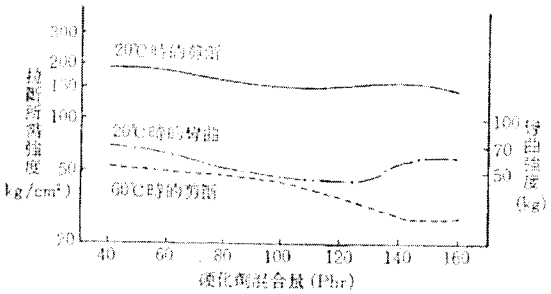

圖Ⅱ 2.1
硬化劑混合量和黏力強度
（在20°C七天的硬化）
試驗片：軟鋼板 (25×100×1.6mm)
(Over-lap)12.5mm

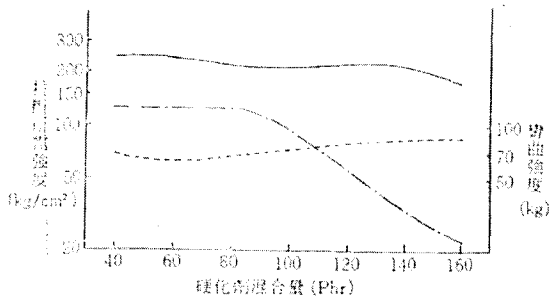

圖Ⅱ 2.2
硬化劑混合量和黏力強度
（在80°C一小時的硬化）
試驗片：以及其他同圖Ⅱ 2.1

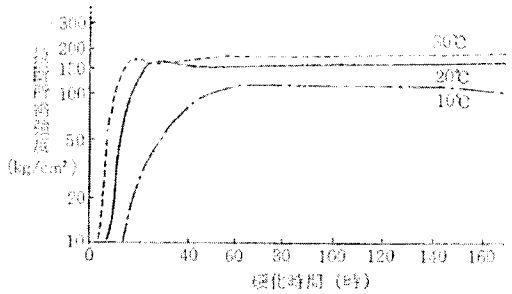

圖Ⅱ 2.3
常溫時的硬化特性 硬化劑混合率 100phr

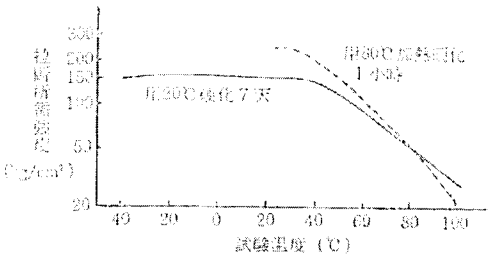

圖Ⅱ 2.5
耐熱特性 硬化劑混合率爲 100phr

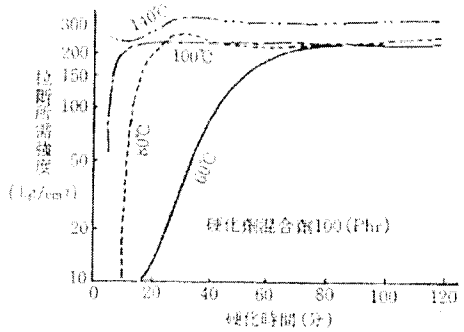

圖Ⅱ 2.4
加熱硬化特性 硬化劑混合率爲 100phr

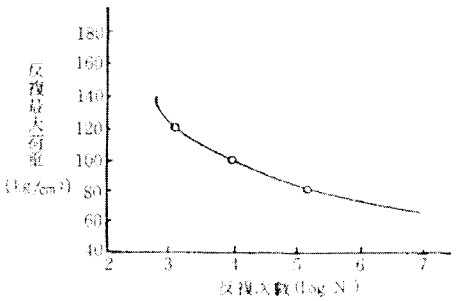

圖Ⅱ 2.6
老化特性

表Ⅱ 2.1 物理特性

抗張力 (kg/mm²)	5.04	硬度 ロックウェルM	68
抗扛力 (kg/mm²)	7.40	硬度 バーコル	67
熱連續性率 (kg/mm²)	214	硬度 ショアーD	82
衝擊強度 (kg/mm²)	11.6	表面固定電阻 (Ω)	5.6×10^{12}
壓縮強度 (kg/mm²)	15.10(6.41)(1)	體積固有電阻 (Ω-Cm)	10.5×10^{15}
熱變形溫度 (°C)	47	誘電率 (10^6cycle)	2.94
		電壓破壞 (kv/mm)	19

表Ⅱ 2.2 拉斷所需强度

被粘體	拉斷所需强度	被粘體	拉斷所需强度 (20°C)
樺樹材	83	多元焦炭	22
馬來西亞杉材	106 ※	苯乙烯樹脂	19
針葉樹材	99<※	壓克力樹脂	30
杉材	66	硬質鹽烯樹脂	36
鐵	158	三聚氰胺裝飾板 (表面)	55
鋁	61	三聚氰胺裝飾板 (背面)	45
黃銅	60	FRP	125
鋼	80		
鉻電鍍	71		
鋅電鍍	50		

〔註〕1. 粘着條件：20°C，硬化7天，硬化劑混合比 100phr(接合部over-lap)12.5mm。

2.※記號者表示材料拉斷。

表Ⅱ 2.3 促進劣化特性

試驗	未試驗前的粘力强度 (kg/cm²)	比較調整試驗片的粘力强度(1) (1個月) (kg/cm²)	經過各試驗1個月後的粘力强度 (kg/cm²)	經過各試驗1,000小時後的粘力强度 (kg/cm²)
利用測候儀所做的耐候試驗	143	150	—	166
利用噴射鹽水的促進試驗	143	150	100	—
利用高溫高濕的促進試驗(2)	143	150	143	—
利用反復冷却的促進試驗(3)	143	150	183	—

〔註〕(1) 20±1°C, 65±5%RH 各保持1個月的試驗片；(2)50°C100%RH；(3)−5°C8小時～50°C16小時。

表Ⅱ 2.4 耐候性

拉斷所需强度 (kg/cm²)

暴露前的粘力强度					
比較調整試驗片的粘力强度 (6個月)	※	156	在戶外暴露6個月的粘力强度		147
〃 (1年)	※	138	〃 1年	〃	147
〃 (2年)	※	130	〃 2年	〃	152
〃 (3年)	※	123	〃 3年	〃	138
〃 (10年)	※	111	〃 10年	〃	137
					130

〔註〕※20±1°C, 65±5%RH 保持各期間的試驗片。

表Ⅱ 2.5 耐水性 (20°C, 7天硬化)

拉斷所需强度 (kg/cm²)

試驗＼時間	0	3個月	6個月	1年
常態試驗	120	106	123	120
耐水試驗		109	117	109

〔註〕硬化劑混合比爲 100phr
試驗片：不銹鋼 (100×25×1.5mm)
(接合部Over-lap)12.5mm。

表Ⅱ 2.6 耐水性 (60°C, 2小時硬化)

拉斷所需强度 (kg/cm²)

試驗＼時間	0	3個月	6個月	1年
常態試驗	157	150	169	163
耐水試驗		133	108	116

〔註〕同表Ⅱ 2.5

表II 2.7 耐 油 性

拉斷所需強度 (kg/cm²)

放置日數	1天	3天	5天	10天	20天	1個月
放置於20°C室溫	—	—	—	80.0	—	79.0
0°C油中	—	—	77.5	87.5	—	80.0
20°C油中	—	—	82.5	77.6	—	89.5
70°C油中	77.6	75.3	80.0	74.3	—	71.0
循環油中 cycle	—	—	79.0	78.0	89.0	76.0

放置日數	40天	2個月	3個月	6個月	1年	10年
放置於 20°C室溫	—	—	73.0	65.9	76.3	75.9
0°C油中	—	86.5	71.5	80.5	80.2	—
20°C油中	—	70.5	79.5	78.7	79.7	—
70°C油中	—	75.5	—	75.4	68.3	—
循環油中 (cycle)	71.5	—	—	—	—	—

〔註〕 1. 硬化劑混合比為80phr，試驗片電木片 (100×25×3mm)接合部(Over-lap)12.5mm 2. 油為變壓器油。
3. 試驗片全部破裂。

表II 2.8 耐溶劑、耐藥品性

種類		浸漬7天後的黏力保持率 (%)		浸漬1個月後的黏力保持率 (%)	
		以20°C硬化7天的試驗片	以80°C硬化1小時的試驗片	以20°C硬化7天的試驗片	以80°C硬化1小時的試驗片
溶劑	已烷	107.0	80.6	94.1	78.8
		85.5	63.8	51.7	66.8
		88.8	69.5	93.4	70.8
		89.5	71.3	97.4	68.7
		90.2	64.7	101.3	69.1
	三氯化烯	91.5	72.7	65.0	69.5
油	植物油	102.7	90.8	107.3	90.3
	礦物油	96.2	87.8	98.1	84.2
藥品	蒸餾水	93.4	72.3	96.3	69.3
	10% 硝酸溶液	93.4	72.8	79.8	69.8
	10% 硫酸溶液	71.7	67.8	70.8	57.2
	10% 苛性蘇打溶液	97.2	74.3	83.8	74.3
	10% 食鹽水溶液	89.6	71.8	91.0	69.8
	10% 酢酸溶液	94.2	77.8	78.4	64.2

〔註〕 黏劑混合率＝1：1，試驗片：軟鋼片 (25×100×1.6mm) 但是耐藥試驗時使用了SUS-27，接合部 (Over-lap) 為 12.5mm。

容量規格＝(主)、(硬) 110g、1kg、 15kg (組)

台灣 施敏打硬 セメダイン 股份有限公司
總公司：台北縣汐止鎮下生崇山76-3號
電話：(02) 2629-1125・2629-1443
FAX：(02) 8631 6896
高雄分公司：高雄市三民區熱河二街14號
電話：(07) 3118198・3216686