#01_GSM850_GSM Voice_Left Cheek_Ch251

Communication System: GSM850 ; Frequency: 848.8 MHz;Duty Cycle: 1:8.3
Medium: HSL_850_150213 Medium parameters used: f = 849 MHz; σ = 0.929 S/m; ε_r = 42.62; ρ = 1000 kg/m^3
Ambient Temperature：23.4 ℃； Liquid Temperature：22.4 ℃

DASY5 Configuration:
- Probe: ES3DV3 - SN3270; ConvF(6.43, 6.43, 6.43); Calibrated: 2014/9/26;
- Sensor-Surface: 2mm (Mechanical Surface Detection)
- Electronics: DAE4 Sn778; Calibrated: 2014/8/21
- Phantom: SAM_Left; Type: QD000P40CD; Serial: TP:1542
- Measurement SW: DASY52, Version 52.8 (7);SEMCAD X Version 14.6.10 (7164)

Configuration/Ch251/Area Scan (61x121x1): Interpolated grid: dx=1.500 mm, dy=1.500 mm
Maximum value of SAR (interpolated) = 0.201 W/kg

Configuration/Ch251/Zoom Scan (5x5x7)/Cube 0: Measurement grid: dx=8mm, dy=8mm, dz=5mm
Reference Value = 14.608 V/m; Power Drift = 0.15 dB
Peak SAR (extrapolated) = 0.580 W/kg
SAR(1 g) = 0.207 W/kg; SAR(10 g) = 0.116 W/kg
Maximum value of SAR (measured) = 0.349 W/kg

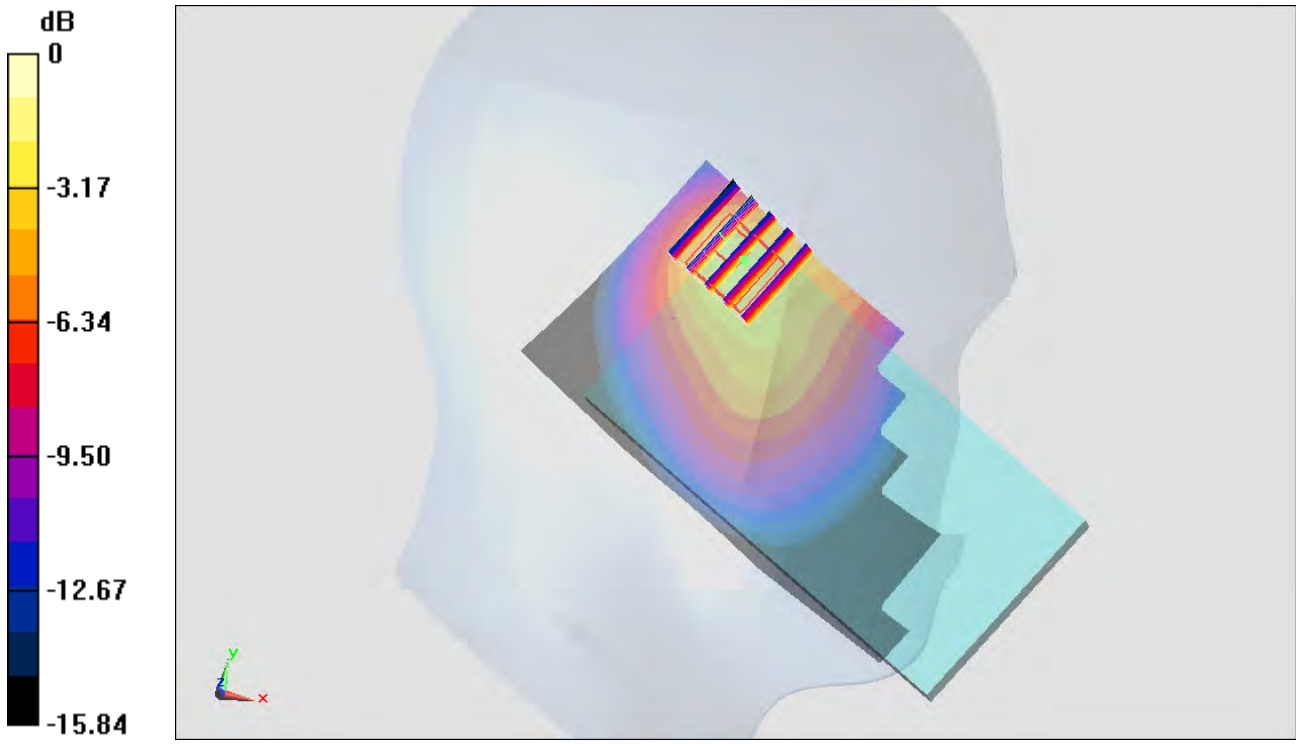

0 dB = 0.349 W/kg = -4.57 dBW/kg

#02_GSM1900_GSM Voice_Left Cheek_Ch810

Communication System: PCS; Frequency: 1909.8 MHz;Duty Cycle: 1:8.3
Medium: HSL_1900_150212 Medium parameters used: f = 1910 MHz; σ = 1.442 S/m; ε_r = 38.984; ρ = 1000 kg/m^3
Ambient Temperature：23.5 ℃； Liquid Temperature：22.5 ℃

DASY5 Configuration:
- Probe: ES3DV3 - SN3270; ConvF(5.05, 5.05, 5.05); Calibrated: 2014/9/26;
- Sensor-Surface: 2mm (Mechanical Surface Detection)
- Electronics: DAE4 Sn778; Calibrated: 2014/8/21
- Phantom: SAM_Right; Type: QD000P40CC; Serial: TP:1383
- Measurement SW: DASY52, Version 52.8 (7);SEMCAD X Version 14.6.10 (7164)

Configuration/Ch810/Area Scan (61x121x1): Interpolated grid: dx=1.500 mm, dy=1.500 mm
Maximum value of SAR (interpolated) = 1.38 W/kg

Configuration/Ch810/Zoom Scan (5x5x7)/Cube 0: Measurement grid: dx=8mm, dy=8mm, dz=5mm
Reference Value = 29.939 V/m; Power Drift = -0.00 dB
Peak SAR (extrapolated) = 2.14 W/kg
SAR(1 g) = 0.901 W/kg; SAR(10 g) = 0.476 W/kg
Maximum value of SAR (measured) = 1.19 W/kg

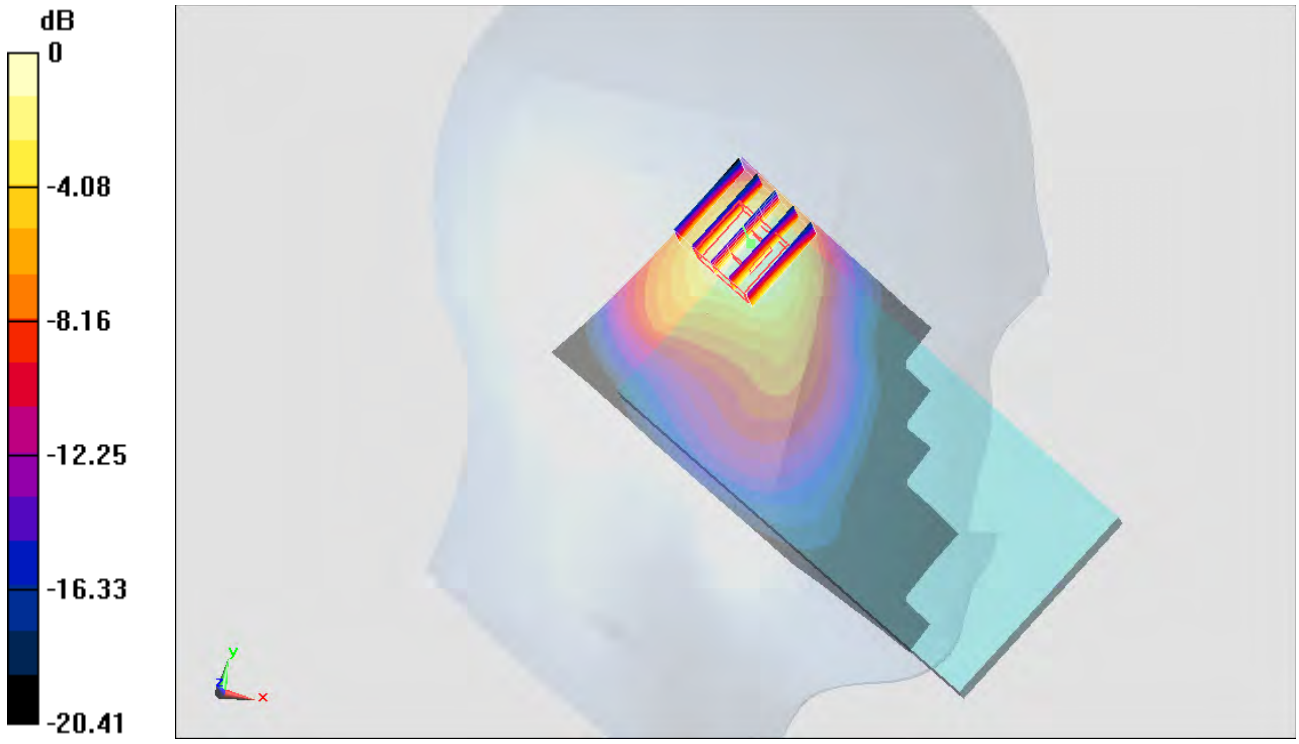

0 dB = 1.19 W/kg = 0.76 dBW/kg

#03_WCDMA V_RMC 12.2Kbps_Right Cheek_Ch4233

Communication System: WCDMA; Frequency: 846.6 MHz;Duty Cycle: 1:1
Medium: HSL_850_150216 Medium parameters used: f = 847 MHz; σ = 0.924 S/m; ε_r = 40.523; ρ = 1000 kg/m^3
Ambient Temperature：23.3 ℃； Liquid Temperature：22.3 ℃

DASY5 Configuration:
- Probe: EX3DV4 - SN3697; ConvF(8.93, 8.93, 8.93); Calibrated: 2014/9/29;
- Sensor-Surface: 1.4mm (Mechanical Surface Detection)
- Electronics: DAE4 Sn1388; Calibrated: 2014/9/24
- Phantom: SAM_Left; Type: QD000P40CD; Serial: TP:1542
- Measurement SW: DASY52, Version 52.8 (7);SEMCAD X Version 14.6.10 (7164)

Configuration/Ch4233/Area Scan (61x121x1): Interpolated grid: dx=1.500 mm, dy=1.500 mm
Maximum value of SAR (interpolated) = 0.222 W/kg

Configuration/Ch4233/Zoom Scan (5x5x7)/Cube 0: Measurement grid: dx=8mm, dy=8mm, dz=5mm
Reference Value = 16.049 V/m; Power Drift = -0.11 dB
Peak SAR (extrapolated) = 0.256 W/kg
SAR(1 g) = 0.196 W/kg; SAR(10 g) = 0.140 W/kg
Maximum value of SAR (measured) = 0.232 W/kg

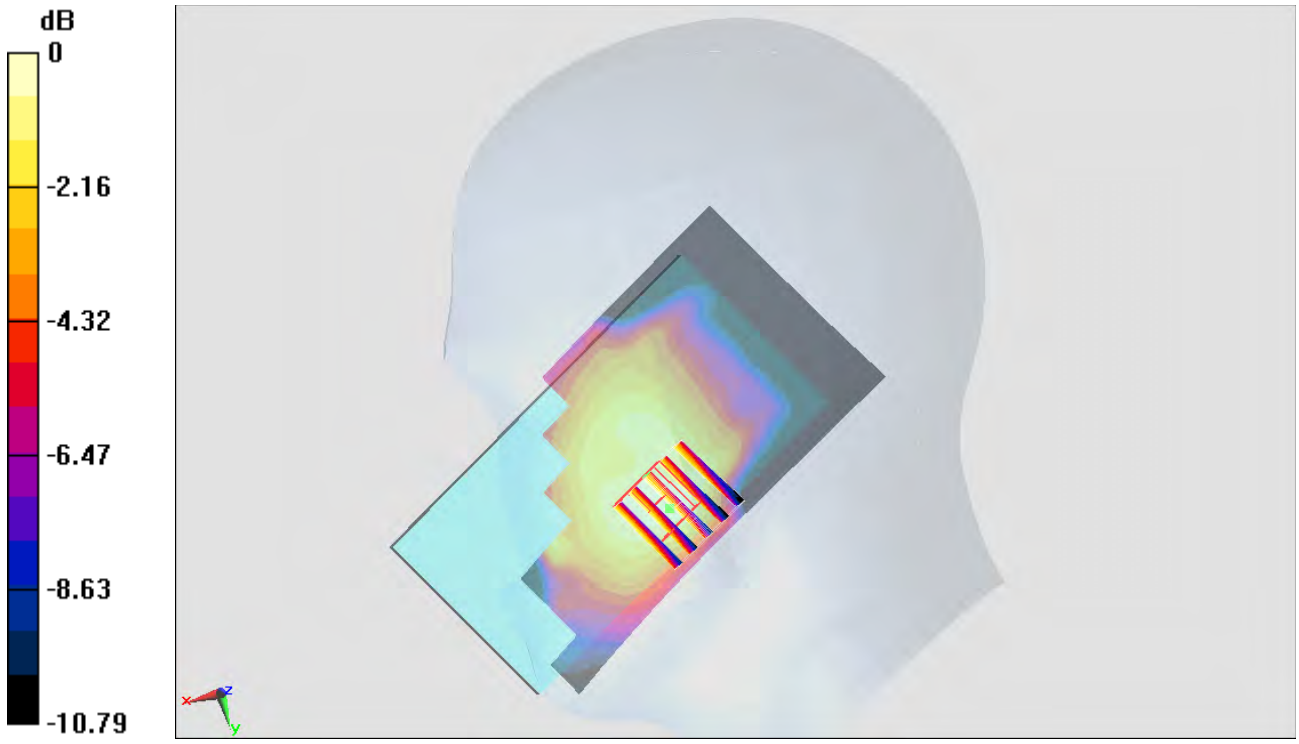

0 dB = 0.232 W/kg = -6.35 dBW/kg

#04_WCDMA IV_RMC 12.2Kbps_Left Cheek_Ch1513

Communication System: WCDMA ; Frequency: 1752.6 MHz;Duty Cycle: 1:1
Medium: HSL_1750_150214 Medium parameters used: f = 1753 MHz; σ = 1.341 S/m; ε_r = 39.923; ρ = 1000 kg/m^3
Ambient Temperature：23.3 ℃； Liquid Temperature：22.3 ℃

DASY5 Configuration:
- Probe: EX3DV4 - SN3955; ConvF(8.9, 8.9, 8.9); Calibrated: 2014/11/21;
- Sensor-Surface: 1.4mm (Mechanical Surface Detection)
- Electronics: DAE4 Sn1399; Calibrated: 2014/11/13
- Phantom: SAM_Left; Type: QD000P40CD; Serial: TP:1542
- Measurement SW: DASY52, Version 52.8 (7);SEMCAD X Version 14.6.10 (7164)

Configuration/Ch1513/Area Scan (61x121x1): Interpolated grid: dx=1.500 mm, dy=1.500 mm
Maximum value of SAR (interpolated) = 0.383 W/kg

Configuration/Ch1513/Zoom Scan (5x5x7)/Cube 0: Measurement grid: dx=8mm, dy=8mm, dz=5mm
Reference Value = 16.478 V/m; Power Drift = 0.17 dB
Peak SAR (extrapolated) = 0.402 W/kg
SAR(1 g) = 0.267 W/kg; SAR(10 g) = 0.171 W/kg
Maximum value of SAR (measured) = 0.347 W/kg

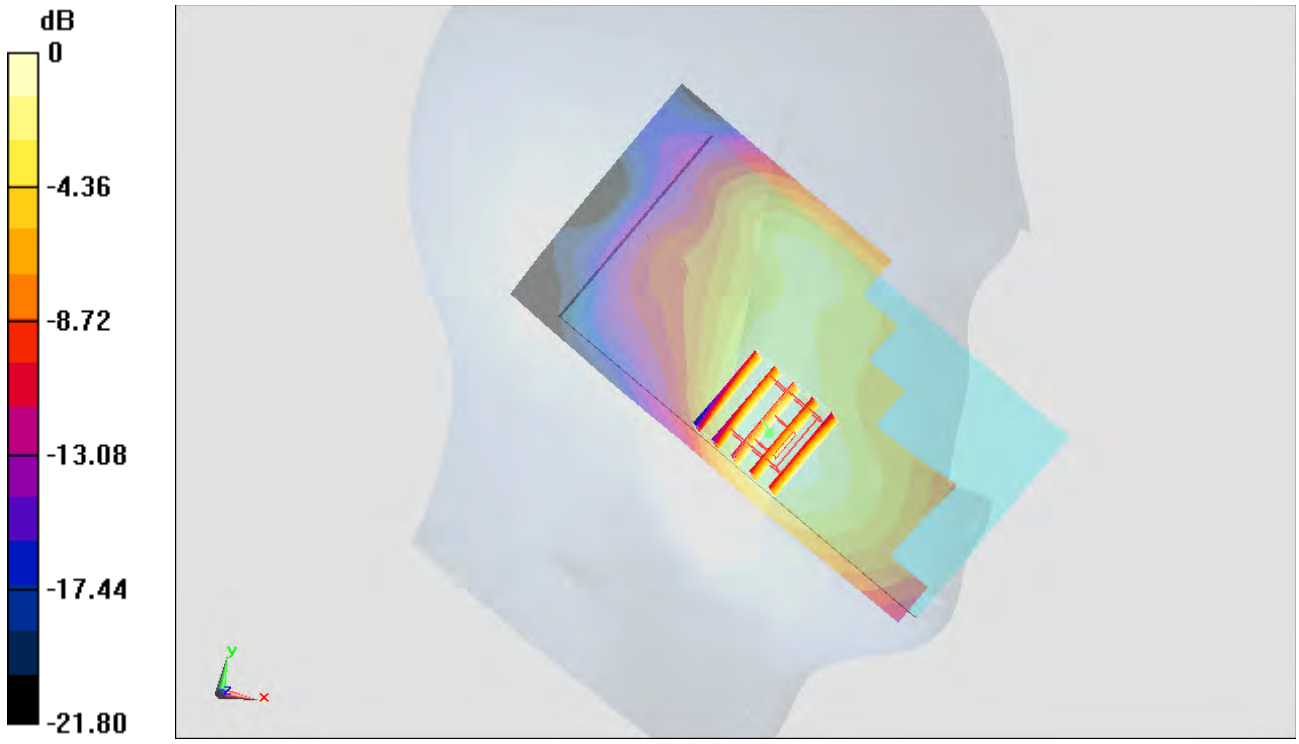

0 dB = 0.347 W/kg = -4.60 dBW/kg

#05_WCDMA II_RMC 12.2Kbps_Left Cheek_Ch9262

Communication System: WCDMA ; Frequency: 1852.4 MHz;Duty Cycle: 1:1
Medium: HSL_1900_150217 Medium parameters used: f = 1852.4 MHz; σ = 1.383 S/m; ε_r = 39.47; ρ = 1000 kg/m^3
Ambient Temperature：23.4 ℃； Liquid Temperature：22.4 ℃

DASY5 Configuration:
- Probe: EX3DV4 - SN3955; ConvF(8.5, 8.5, 8.5); Calibrated: 2014/11/21;
- Sensor-Surface: 1.4mm (Mechanical Surface Detection)
- Electronics: DAE4 Sn1399; Calibrated: 2014/11/13
- Phantom: SAM_Right; Type: QD000P40CC; Serial: TP:1383
- Measurement SW: DASY52, Version 52.8 (7);SEMCAD X Version 14.6.10 (7164)

Configuration/Ch9262/Area Scan (61x121x1): Interpolated grid: dx=1.500 mm, dy=1.500 mm
Maximum value of SAR (interpolated) = 0.486 W/kg

Configuration/Ch9262/Zoom Scan (5x5x7)/Cube 0: Measurement grid: dx=8mm, dy=8mm, dz=5mm
Reference Value = 18.558 V/m; Power Drift = -0.11 dB
Peak SAR (extrapolated) = 0.527 W/kg
SAR(1 g) = 0.331 W/kg; SAR(10 g) = 0.206 W/kg
Maximum value of SAR (measured) = 0.436 W/kg

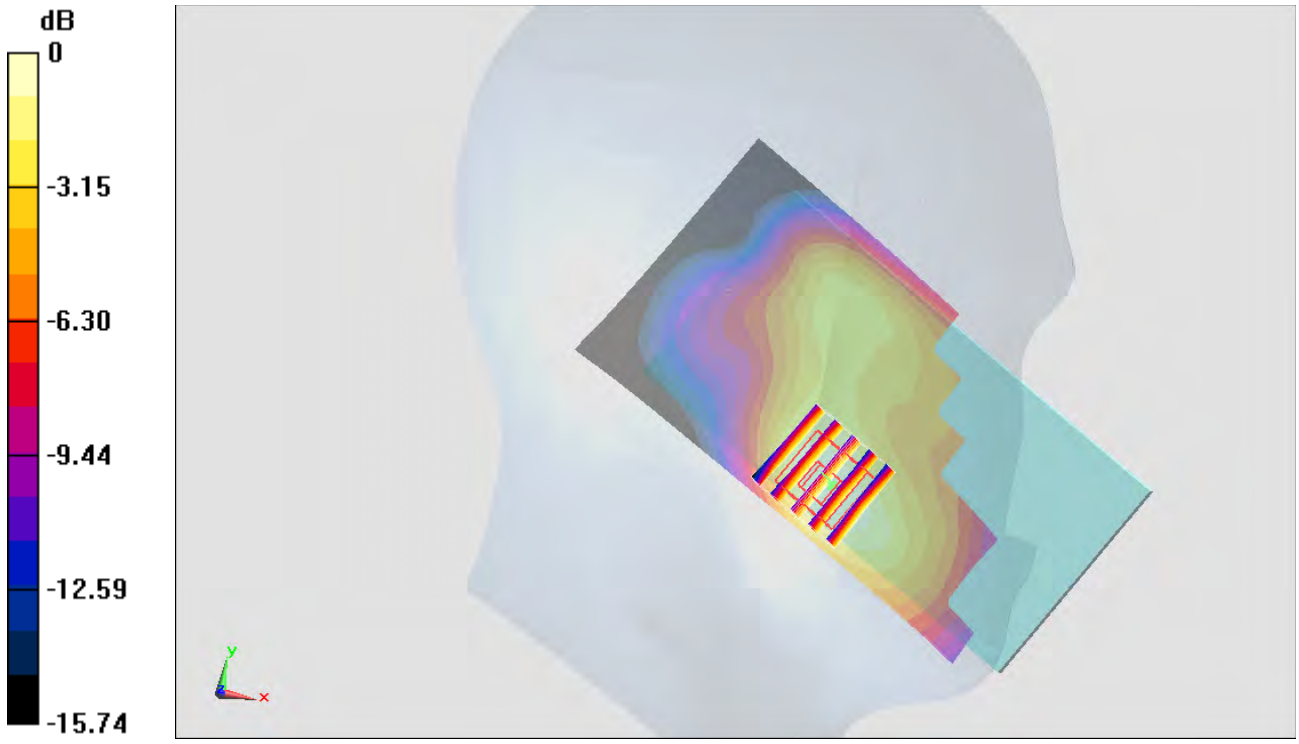

0 dB = 0.436 W/kg = -3.61 dBW/kg

#06_LTE Band 17_10M_QPSK_1RB_0offset_Right Cheek_Ch23800

Communication System: LTE ; Frequency: 711 MHz;Duty Cycle: 1:1
Medium: HSL_750_150225 Medium parameters used: f = 711 MHz; σ = 0.861 S/m; ε_r = 41.827; ρ = 1000 kg/m^3
Ambient Temperature：23.4 ℃； Liquid Temperature：22.4 ℃

DASY5 Configuration:
- Probe: EX3DV4 - SN3925; ConvF(10.26, 10.26, 10.26); Calibrated: 2014/5/22;
- Sensor-Surface: 1.4mm (Mechanical Surface Detection)
- Electronics: DAE3 Sn495; Calibrated: 2014/5/19
- Phantom: SAM_Left; Type: QD000P40CD; Serial: TP:1542
- Measurement SW: DASY52, Version 52.8 (7);SEMCAD X Version 14.6.10 (7164)

Configuration/Ch23800/Area Scan (61x121x1): Interpolated grid: dx=1.500 mm, dy=1.500 mm
Maximum value of SAR (interpolated) = 0.0792 W/kg

Configuration/Ch23800/Zoom Scan (5x5x7)/Cube 0: Measurement grid: dx=8mm, dy=8mm, dz=5mm
Reference Value = 9.975 V/m; Power Drift = 0.04 dB
Peak SAR (extrapolated) = 0.0860 W/kg
SAR(1 g) = 0.070 W/kg; SAR(10 g) = 0.055 W/kg
Maximum value of SAR (measured) = 0.0804 W/kg

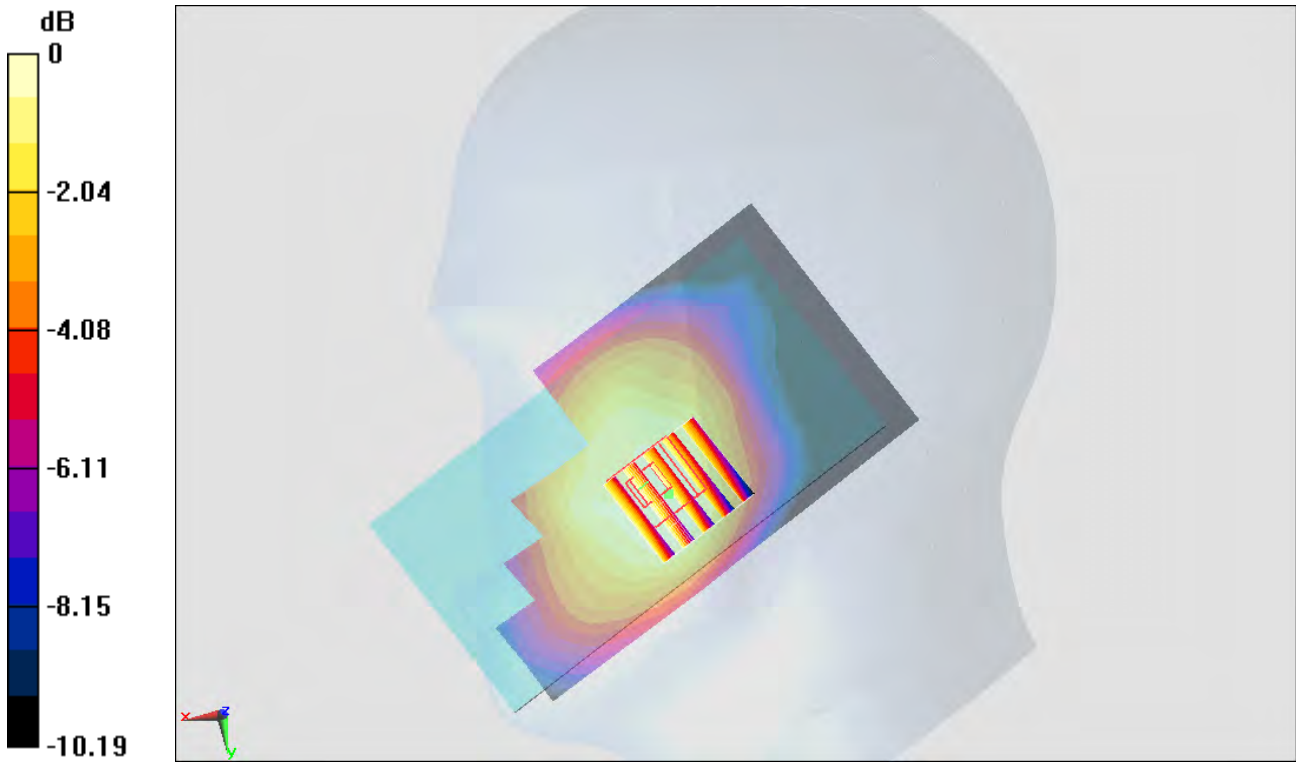

0 dB = 0.0804 W/kg = -10.95 dBW/kg

#07_LTE Band 5_10M_QPSK_1RB_0offset_Right Cheek_Ch20600

Communication System: LTE ; Frequency: 844 MHz;Duty Cycle: 1:1
Medium: HSL_850_150216 Medium parameters used: f = 844 MHz; σ = 0.921 S/m; ε_r = 40.562; ρ = 1000 kg/m^3
Ambient Temperature：23.3 ℃； Liquid Temperature：22.3 ℃

DASY5 Configuration:
- Probe: EX3DV4 - SN3697; ConvF(8.93, 8.93, 8.93); Calibrated: 2014/9/29;
- Sensor-Surface: 1.4mm (Mechanical Surface Detection)
- Electronics: DAE4 Sn1388; Calibrated: 2014/9/24
- Phantom: SAM_Left; Type: QD000P40CD; Serial: TP:1542
- Measurement SW: DASY52, Version 52.8 (7);SEMCAD X Version 14.6.10 (7164)

Configuration/Ch20600/Area Scan (61x121x1): Interpolated grid: dx=1.500 mm, dy=1.500 mm
Maximum value of SAR (interpolated) = 0.204 W/kg

Configuration/Ch20600/Zoom Scan (5x5x7)/Cube 0: Measurement grid: dx=8mm, dy=8mm, dz=5mm
Reference Value = 15.720 V/m; Power Drift = -0.18 dB
Peak SAR (extrapolated) = 0.228 W/kg
SAR(1 g) = 0.182 W/kg; SAR(10 g) = 0.143 W/kg
Maximum value of SAR (measured) = 0.213 W/kg

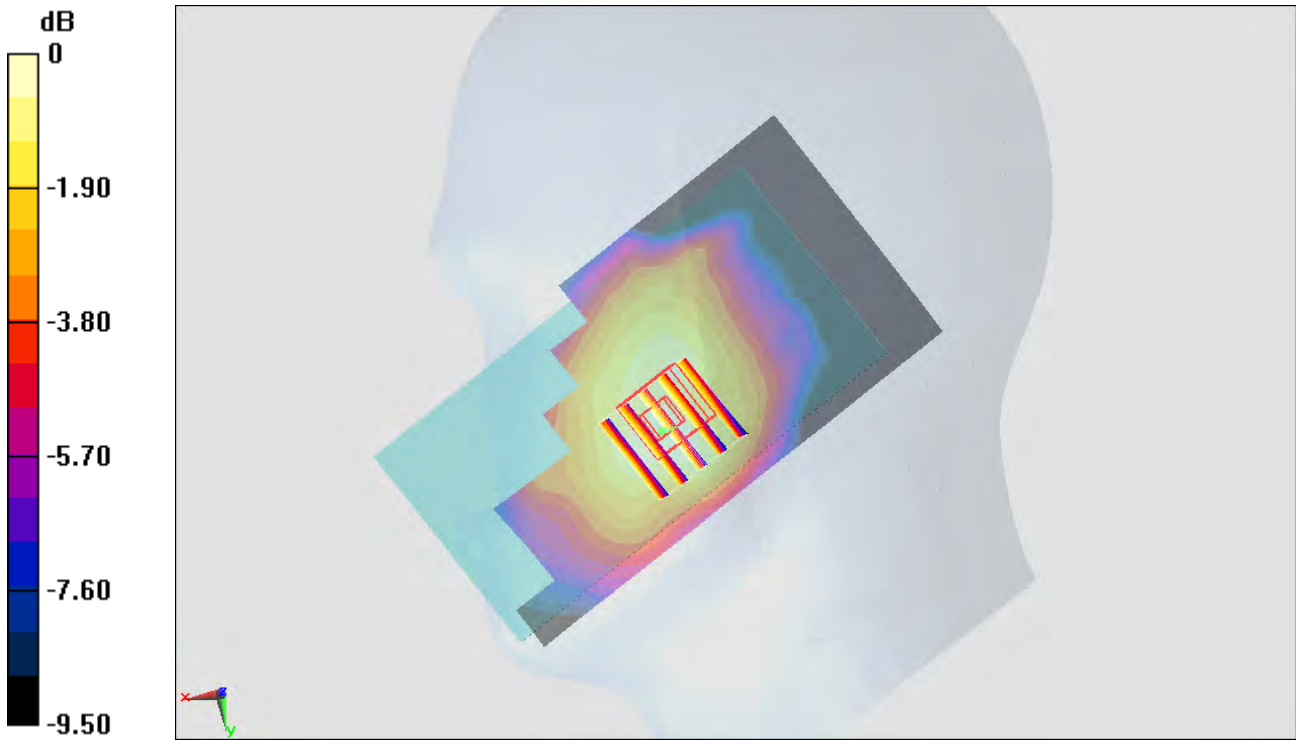

0 dB = 0.213 W/kg = -6.72 dBW/kg

#08_LTE Band 4_20M_QPSK_1RB_0offset_Right Cheek_Ch20300

Communication System: LTE ; Frequency: 1745 MHz;Duty Cycle: 1:1
Medium: HSL_1750_150214 Medium parameters used: f = 1745 MHz; σ = 1.334 S/m; ε_r = 39.961; ρ = 1000 kg/m^3
Ambient Temperature：23.3 ℃； Liquid Temperature：22.3 ℃

DASY5 Configuration:
- Probe: EX3DV4 - SN3955; ConvF(8.9, 8.9, 8.9); Calibrated: 2014/11/21;
- Sensor-Surface: 1.4mm (Mechanical Surface Detection)
- Electronics: DAE4 Sn1399; Calibrated: 2014/11/13
- Phantom: SAM_Left; Type: QD000P40CD; Serial: TP:1542
- Measurement SW: DASY52, Version 52.8 (7);SEMCAD X Version 14.6.10 (7164)

Configuration/Ch20300/Area Scan (61x121x1): Interpolated grid: dx=1.500 mm, dy=1.500 mm
Maximum value of SAR (interpolated) = 0.306 W/kg

Configuration/Ch20300/Zoom Scan (5x5x7)/Cube 0: Measurement grid: dx=8mm, dy=8mm, dz=5mm
Reference Value = 15.132 V/m; Power Drift = 0.11 dB
Peak SAR (extrapolated) = 0.351 W/kg
SAR(1 g) = 0.242 W/kg; SAR(10 g) = 0.157 W/kg
Maximum value of SAR (measured) = 0.312 W/kg

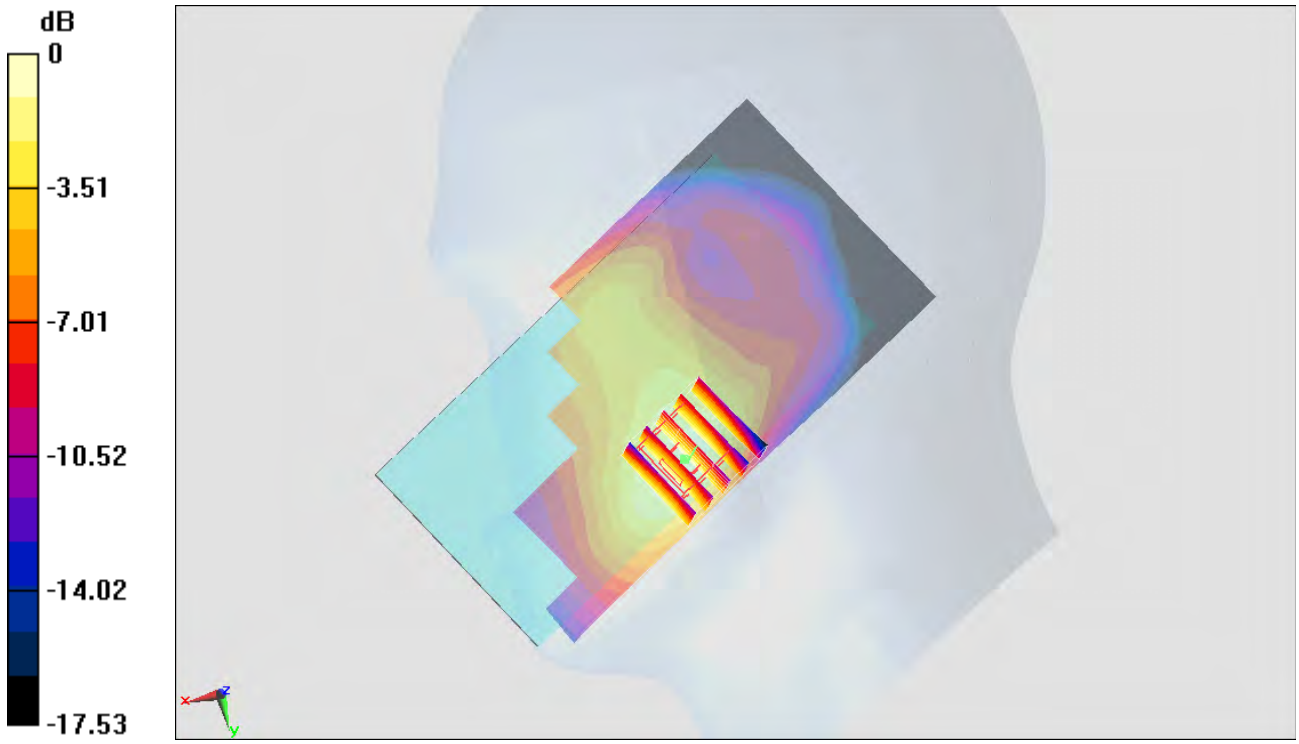

0 dB = 0.312 W/kg = -5.06 dBW/kg

#09_LTE Band 2_20M_QPSK_1RB_0offset_Left Cheek_Ch18700

Communication System: LTE ; Frequency: 1860 MHz;Duty Cycle: 1:1
Medium: HSL_1900_150217 Medium parameters used: f = 1860 MHz; σ = 1.39 S/m; ε_r = 39.444; ρ = 1000 kg/m^3
Ambient Temperature：23.4 ℃； Liquid Temperature：22.4 ℃

DASY5 Configuration:
- Probe: EX3DV4 - SN3955; ConvF(8.5, 8.5, 8.5); Calibrated: 2014/11/21;
- Sensor-Surface: 1.4mm (Mechanical Surface Detection)
- Electronics: DAE4 Sn1399; Calibrated: 2014/11/13
- Phantom: SAM_Right; Type: QD000P40CC; Serial: TP:1383
- Measurement SW: DASY52, Version 52.8 (7);SEMCAD X Version 14.6.10 (7164)

Configuration/Ch18700/Area Scan (61x121x1): Interpolated grid: dx=1.500 mm, dy=1.500 mm
Maximum value of SAR (interpolated) = 0.464 W/kg

Configuration/Ch18700/Zoom Scan (5x5x7)/Cube 0: Measurement grid: dx=8mm, dy=8mm, dz=5mm
Reference Value = 18.031 V/m; Power Drift = -0.01 dB
Peak SAR (extrapolated) = 0.536 W/kg
SAR(1 g) = 0.313 W/kg; SAR(10 g) = 0.195 W/kg
Maximum value of SAR (measured) = 0.432 W/kg

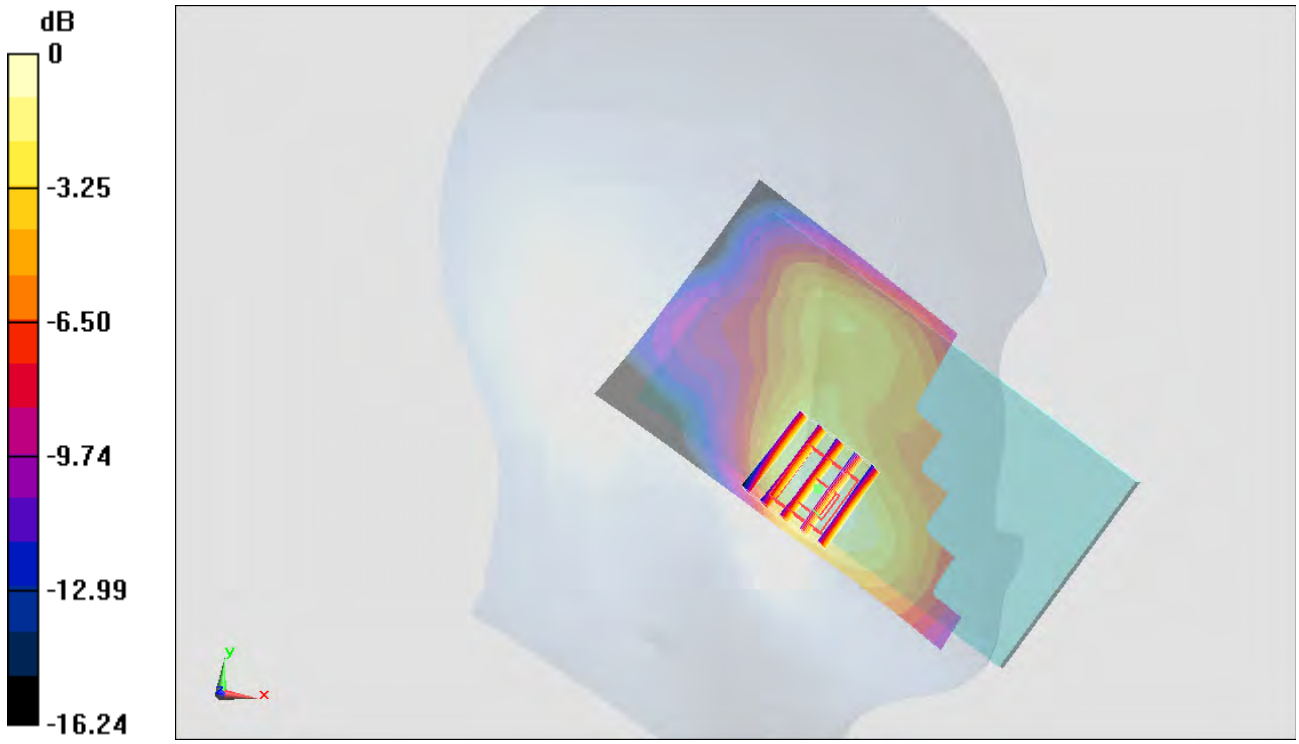

0 dB = 0.432 W/kg = -3.65 dBW/kg

#10_LTE Band 7_20M_QPSK_1RB_0offset_Left Cheek_Ch20850

Communication System: LTE ; Frequency: 2510 MHz;Duty Cycle: 1:1
Medium: HSL2600_150226 Medium parameters used: f = 2510 MHz; σ = 1.9 S/m; ε_r = 38.66; ρ = 1000 kg/m^3
Ambient Temperature：23.3 ℃； Liquid Temperature：22.3 ℃

DASY5 Configuration:
- Probe: EX3DV4 - SN3955; ConvF(7.21, 7.21, 7.21); Calibrated: 2014/11/21;
- Sensor-Surface: 1.4mm (Mechanical Surface Detection)
- Electronics: DAE4 Sn1399; Calibrated: 2014/11/13
- Phantom: SAM-Left; Type: QD 000 P40 C; Serial: TP-1478
- Measurement SW: DASY52, Version 52.8 (8);SEMCAD X Version 14.6.10 (7331)

Configuration/Ch20850/Area Scan (81x151x1): Interpolated grid: dx=1.200 mm, dy=1.200 mm
Maximum value of SAR (interpolated) = 0.117 W/kg

Configuration/Ch20850/Zoom Scan (7x7x7)/Cube 0: Measurement grid: dx=5mm, dy=5mm, dz=5mm
Reference Value = 7.620 V/m; Power Drift = 0.14 dB
Peak SAR (extrapolated) = 0.194 W/kg
SAR(1 g) = 0.101 W/kg; SAR(10 g) = 0.051 W/kg
Maximum value of SAR (measured) = 0.159 W/kg

0 dB = 0.159 W/kg = -7.99 dBW/kg

#11_WLAN2.4GHz_802.11b 1Mbps_Right Tilted_Ch6

Communication System: 802.11b; Frequency: 2437 MHz;Duty Cycle: 1:1.012
Medium: HSL_2450_150212 Medium parameters used: f = 2437 MHz; σ = 1.844 S/m; ε_r = 38.3; ρ = 1000 kg/m^3
Ambient Temperature：23.5 ℃； Liquid Temperature：22.5 ℃

DASY5 Configuration:
- Probe: ES3DV3 - SN3270; ConvF(4.52, 4.52, 4.52); Calibrated: 2014/9/26;
- Sensor-Surface: 2mm (Mechanical Surface Detection)
- Electronics: DAE4 Sn778; Calibrated: 2014/8/21
- Phantom: SAM_Right; Type: QD000P40CC; Serial: TP:1383
- Measurement SW: DASY52, Version 52.8 (7);SEMCAD X Version 14.6.10 (7164)

Configuration/Ch6/Area Scan (81x151x1): Interpolated grid: dx=1.200 mm, dy=1.200 mm
Maximum value of SAR (interpolated) = 0.0682 W/kg

Configuration/Ch6/Zoom Scan (7x7x7)/Cube 0: Measurement grid: dx=5mm, dy=5mm, dz=5mm
Reference Value = 7.108 V/m; Power Drift = 0.03 dB
Peak SAR (extrapolated) = 0.142 W/kg
SAR(1 g) = 0.057 W/kg; SAR(10 g) = 0.032 W/kg
Maximum value of SAR (measured) = 0.0832 W/kg

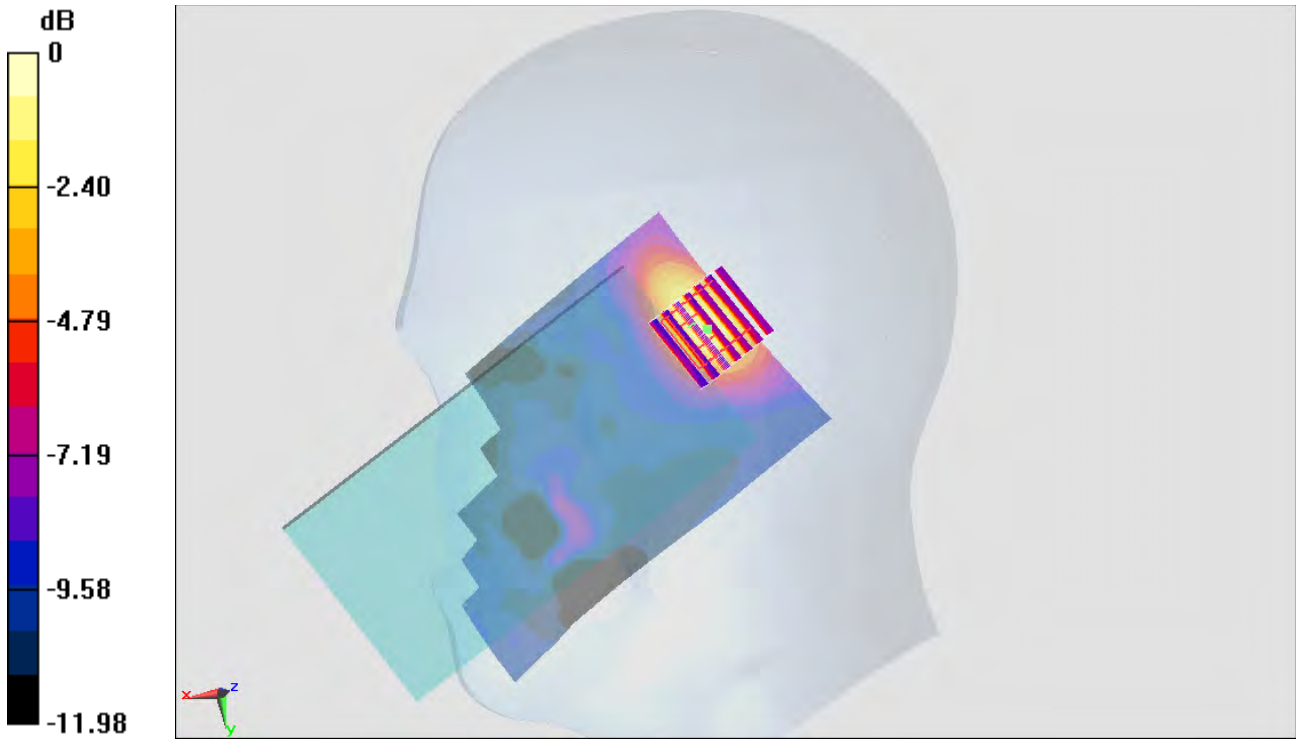

0 dB = 0.0832 W/kg = -10.80 dBW/kg

#12_WLAN5GHz_802.11a 6Mbps_Right Cheek_Ch36

Communication System: 802.11a; Frequency: 5180 MHz;Duty Cycle: 1:1.077
Medium: HSL_5G_150213 Medium parameters used: f = 5180 MHz; σ = 4.557 S/m; ε_r = 36.731; ρ = 1000 kg/m^3
Ambient Temperature：23.6 ℃； Liquid Temperature：22.6 ℃

DASY5 Configuration:
- Probe: EX3DV4 - SN3955; ConvF(5.13, 5.13, 5.13); Calibrated: 2014/11/21;
- Sensor-Surface: 1.4mm (Mechanical Surface Detection)
- Electronics: DAE4 Sn1399; Calibrated: 2014/11/13
- Phantom: SAM_Right; Type: QD000P40CC; Serial: TP:1383
- Measurement SW: DASY52, Version 52.8 (7);SEMCAD X Version 14.6.10 (7164)

Configuration/Ch36/Area Scan (91x181x1): Interpolated grid: dx=1.000 mm, dy=1.000 mm
Maximum value of SAR (interpolated) = 0.622 W/kg

Configuration/Ch36/Zoom Scan (7x7x7)/Cube 0: Measurement grid: dx=4mm, dy=4mm, dz=1.4mm
Reference Value = 12.894 V/m; Power Drift = 0.00 dB
Peak SAR (extrapolated) = 1.05 W/kg
SAR(1 g) = 0.285 W/kg; SAR(10 g) = 0.081 W/kg
Maximum value of SAR (measured) = 0.666 W/kg

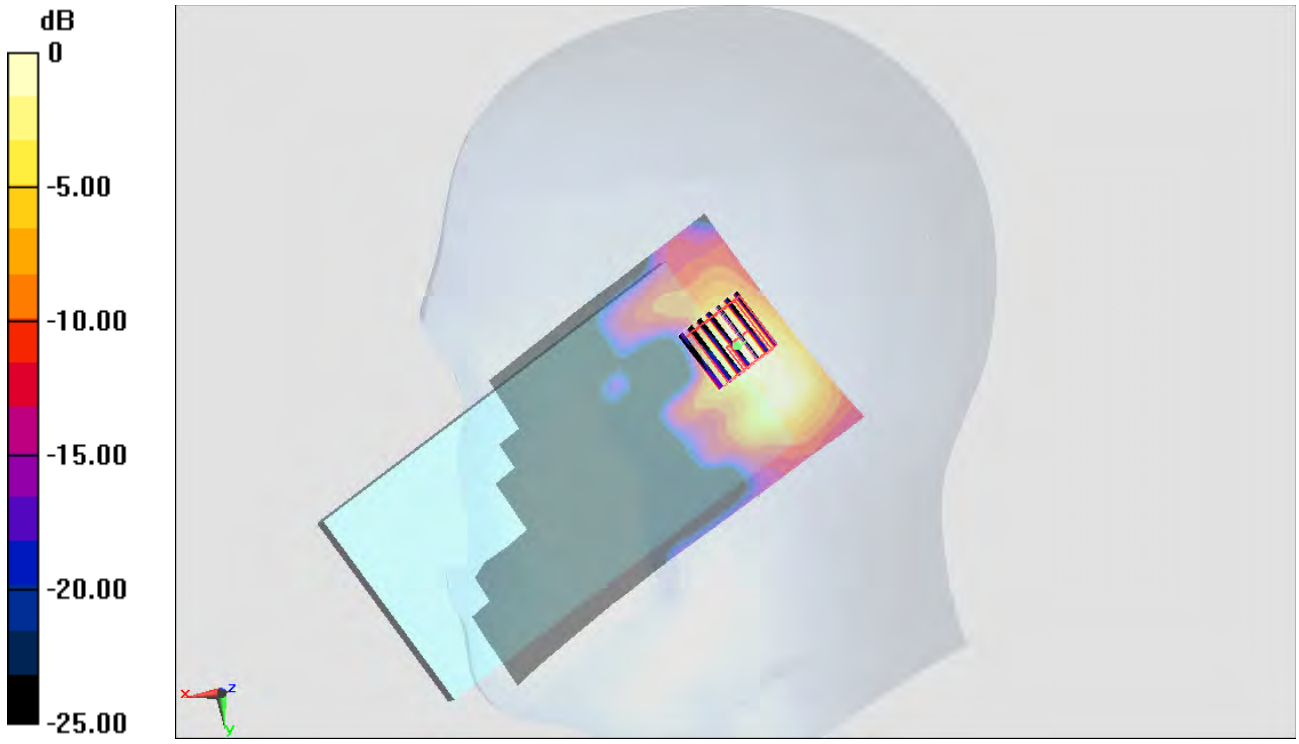

0 dB = 0.666 W/kg = -1.77 dBW/kg

#13_WLAN5GHz_802.11a 6Mbps_Left Tilted_Ch157

Communication System: 802.11a ; Frequency: 5785 MHz;Duty Cycle: 1:1.077
Medium: HSL_5G_150227 Medium parameters used: f = 5785 MHz; σ = 5.411 S/m; ε_r = 34.365; ρ = 1000 kg/m^3
Ambient Temperature：23.4 ℃； Liquid Temperature：22.4 ℃

DASY5 Configuration:
- Probe: EX3DV4 - SN3925; ConvF(4.63, 4.63, 4.63); Calibrated: 2014/5/22;
- Sensor-Surface: 1.4mm (Mechanical Surface Detection)
- Electronics: DAE3 Sn495; Calibrated: 2014/5/19
- Phantom: SAM_Right; Type: QD000P40CC; Serial: TP:1383
- Measurement SW: DASY52, Version 52.8 (7);SEMCAD X Version 14.6.10 (7164)

Configuration/Ch157/Area Scan (101x181x1): Interpolated grid: dx=1.000 mm, dy=1.000 mm
Maximum value of SAR (interpolated) = 0.687 W/kg

Configuration/Ch157/Zoom Scan (7x7x7)/Cube 0: Measurement grid: dx=4mm, dy=4mm, dz=1.4mm
Reference Value = 14.152 V/m; Power Drift = 0.07 dB
Peak SAR (extrapolated) = 1.67 W/kg
SAR(1 g) = 0.411 W/kg; SAR(10 g) = 0.123 W/kg
aximum value of SAR (measured) = 0.998 W/kg

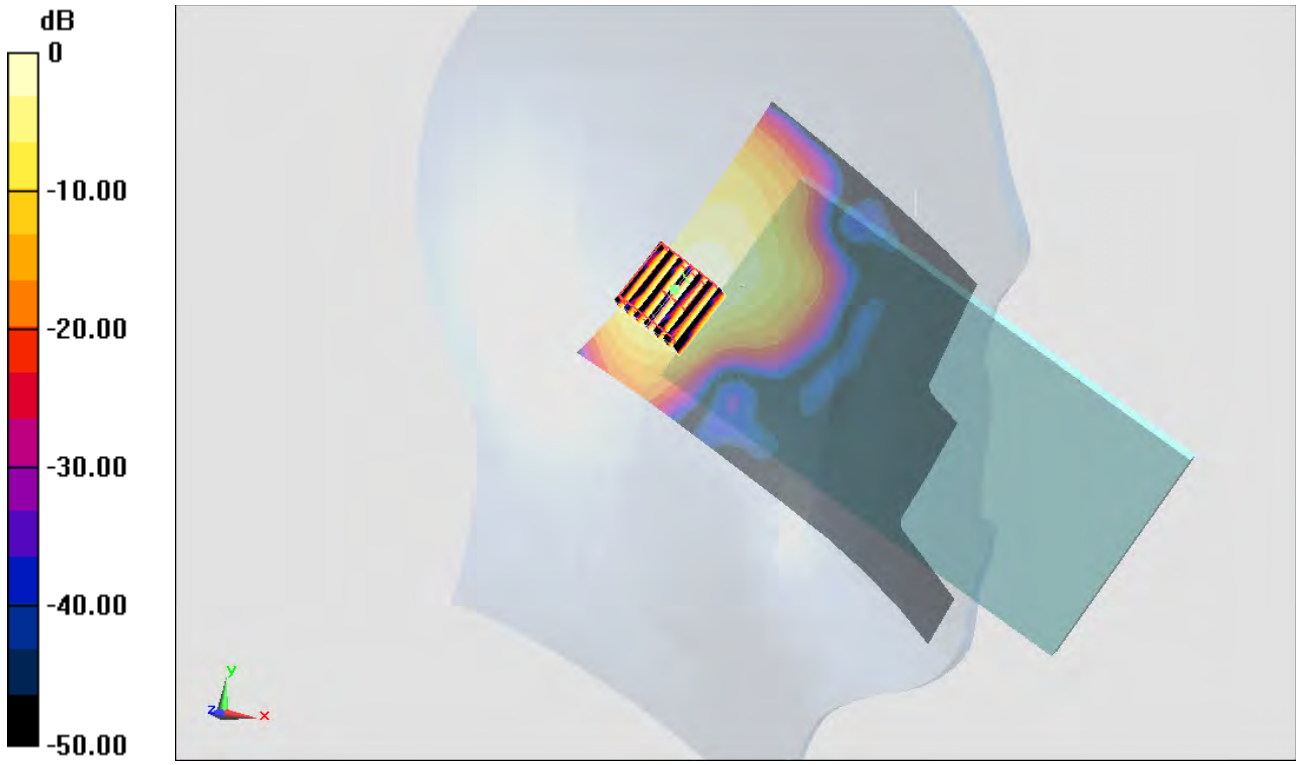

0 dB = 0.998 W/kg = -0.01 dBW/kg

#14_GSM850_GPRS (2 Tx slots)_Back_1cm_Ch128

Communication System: GSM850; Frequency: 824.2 MHz;Duty Cycle: 1:4.15
Medium: MSL_850_150215 Medium parameters used: f = 824.2 MHz; σ = 0.955 S/m; ε_r = 54.896; ρ = 1000 kg/m^3
Ambient Temperature：23.3 ℃； Liquid Temperature：22.3 ℃

DASY5 Configuration:
- Probe: ES3DV3 - SN3270; ConvF(6.15, 6.15, 6.15); Calibrated: 2014/9/26;
- Sensor-Surface: 2mm (Mechanical Surface Detection)
- Electronics: DAE4 Sn778; Calibrated: 2014/8/21
- Phantom: SAM_Right; Type: QD000P40CC; Serial: TP:1383
- Measurement SW: DASY52, Version 52.8 (7);SEMCAD X Version 14.6.10 (7164)

Configuration/Ch128/Area Scan (71x121x1): Interpolated grid: dx=1.500 mm, dy=1.500 mm
Maximum value of SAR (interpolated) = 0.430 W/kg

Configuration/Ch128/Zoom Scan (5x5x7)/Cube 0: Measurement grid: dx=8mm, dy=8mm, dz=5mm
Reference Value = 23.095 V/m; Power Drift = 0.01 dB
Peak SAR (extrapolated) = 0.493 W/kg
SAR(1 g) = 0.370 W/kg; SAR(10 g) = 0.282 W/kg
Maximum value of SAR (measured) = 0.434 W/kg

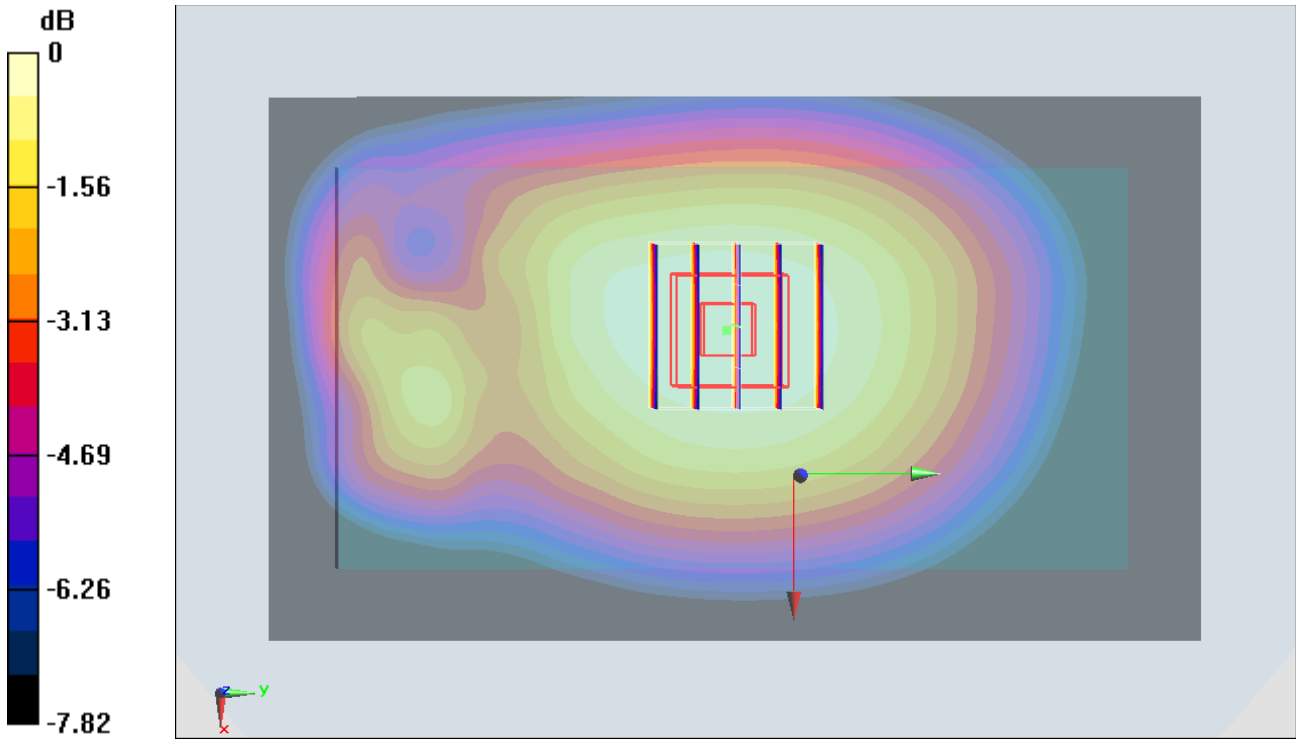

0 dB = 0.434 W/kg = -3.63 dBW/kg

#15_GSM1900_GPRS (2 Tx slots)_Bottom Side_1cm_Ch512

Communication System: PCS; Frequency: 1850.2 MHz;Duty Cycle: 1:4.15
Medium: MSL_1900_150215 Medium parameters used: f = 1850.2 MHz; σ = 1.462 S/m; ε_r = 53.425; ρ = 1000 kg/m^3
Ambient Temperature：23.3 ℃； Liquid Temperature：22.3 ℃

DASY5 Configuration:
- Probe: ES3DV3 - SN3270; ConvF(4.7, 4.7, 4.7); Calibrated: 2014/9/26;
- Sensor-Surface: 2mm (Mechanical Surface Detection)
- Electronics: DAE4 Sn778; Calibrated: 2014/8/21
- Phantom: SAM_Left; Type: QD000P40CD; Serial: TP:1542
- Measurement SW: DASY52, Version 52.8 (7);SEMCAD X Version 14.6.10 (7164)

Configuration/Ch512/Area Scan (41x61x1): Interpolated grid: dx=1.500 mm, dy=1.500 mm
Maximum value of SAR (interpolated) = 0.438 W/kg

Configuration/Ch512/Zoom Scan (5x5x7)/Cube 0: Measurement grid: dx=8mm, dy=8mm, dz=5mm
Reference Value = 18.499 V/m; Power Drift = 0.06 dB
Peak SAR (extrapolated) = 0.527 W/kg
SAR(1 g) = 0.313 W/kg; SAR(10 g) = 0.180 W/kg
Maximum value of SAR (measured) = 0.425 W/kg

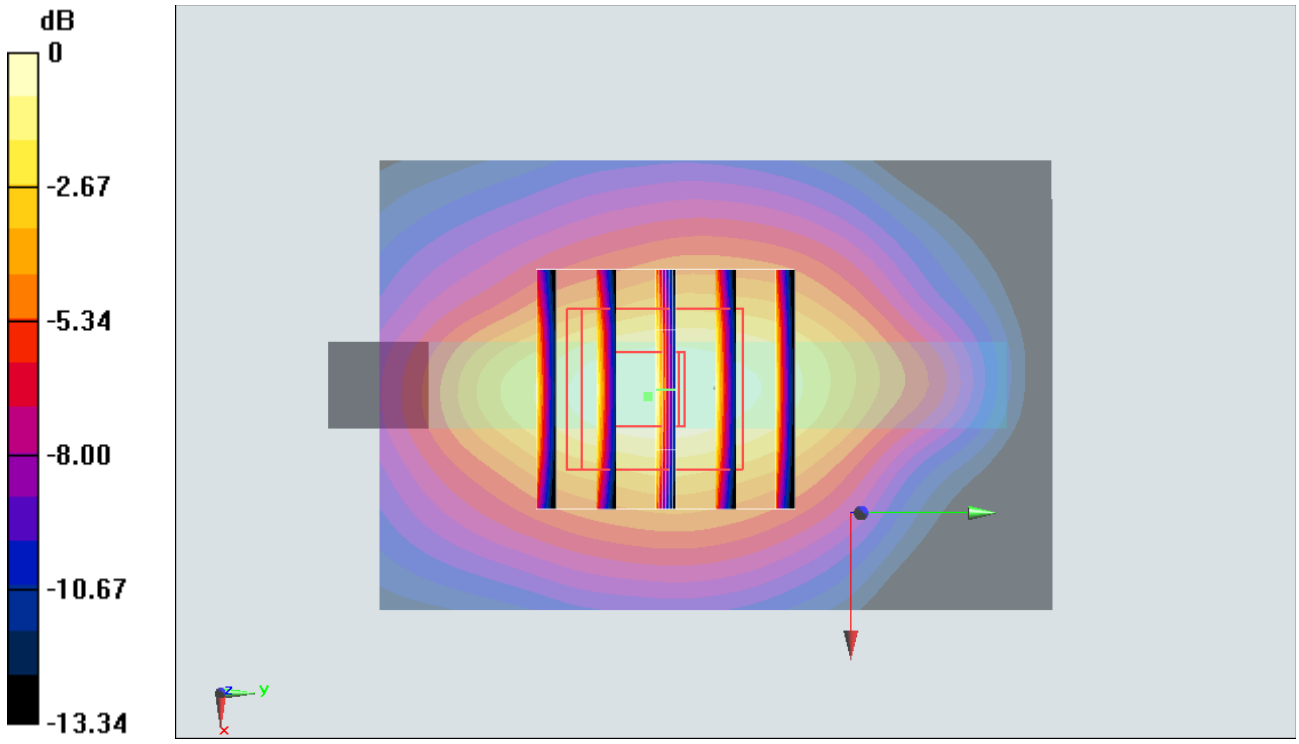

0 dB = 0.425 W/kg = -3.72 dBW/kg

#16_WCDMA V_RMC 12.2Kbps_Back_1cm_Ch4132

Communication System: WCDMA; Frequency: 826.4 MHz;Duty Cycle: 1:1
Medium: MSL_850_150215 Medium parameters used: f = 826.4 MHz; σ = 0.957 S/m; ε_r = 54.875; ρ = 1000 kg/m^3
Ambient Temperature：23.3 ℃； Liquid Temperature：22.3 ℃

DASY5 Configuration:
- Probe: ES3DV3 - SN3270; ConvF(6.15, 6.15, 6.15); Calibrated: 2014/9/26;
- Sensor-Surface: 2mm (Mechanical Surface Detection)
- Electronics: DAE4 Sn778; Calibrated: 2014/8/21
- Phantom: SAM_Right; Type: QD000P40CC; Serial: TP:1383
- Measurement SW: DASY52, Version 52.8 (7);SEMCAD X Version 14.6.10 (7164)

Configuration/Ch4132/Area Scan (71x121x1): Interpolated grid: dx=1.500 mm, dy=1.500 mm
Maximum value of SAR (interpolated) = 0.420 W/kg

Configuration/Ch4132/Zoom Scan (5x5x7)/Cube 0: Measurement grid: dx=8mm, dy=8mm, dz=5mm
Reference Value = 22.635 V/m; Power Drift = -0.00 dB
Peak SAR (extrapolated) = 0.472 W/kg
SAR(1 g) = 0.359 W/kg; SAR(10 g) = 0.273 W/kg
Maximum value of SAR (measured) = 0.418 W/kg

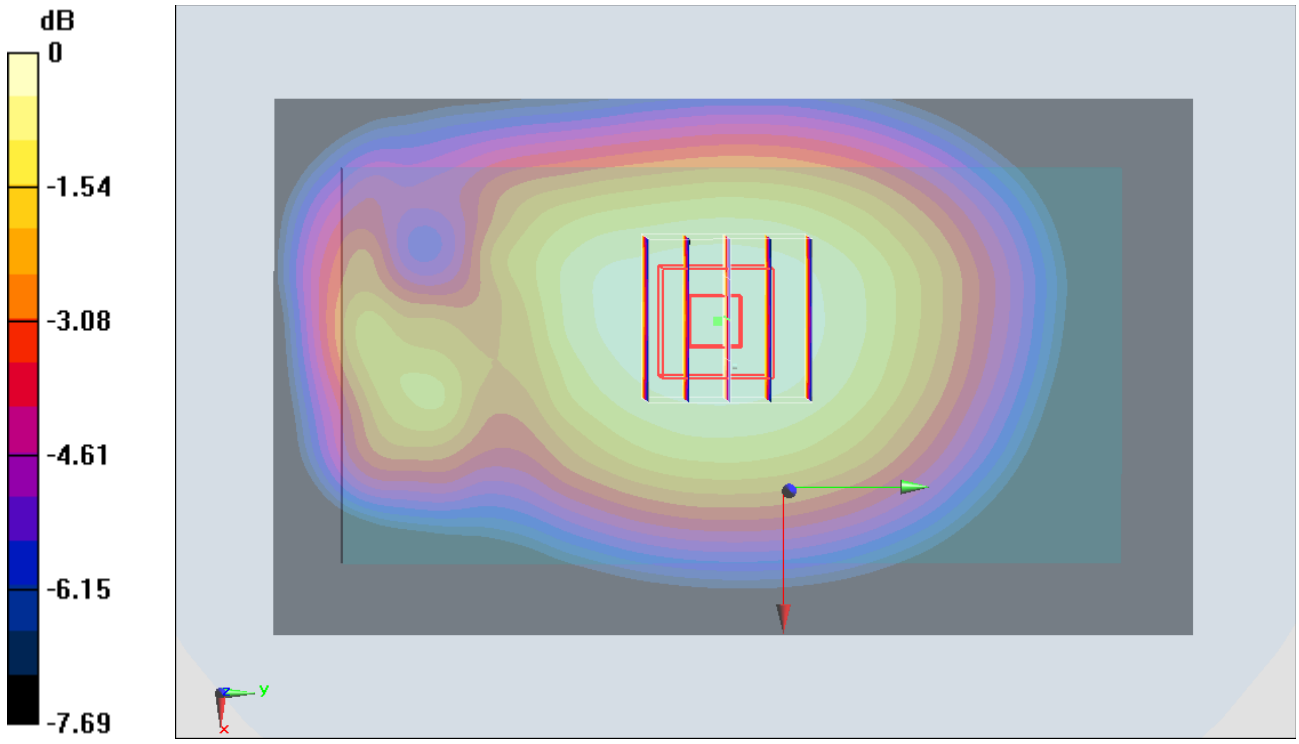

0 dB = 0.418 W/kg = -3.79 dBW/kg

#17_WCDMA IV_RMC 12.2Kbps_Back_1cm_Ch1413

Communication System: WCDMA; Frequency: 1732.6 MHz;Duty Cycle: 1:1
Medium: MSL_1750_150216 Medium parameters used: f = 1733 MHz; σ = 1.451 S/m; ε_r = 53.153; ρ = 1000 kg/m^3
Ambient Temperature：23.4 ℃； Liquid Temperature：22.4 ℃

DASY5 Configuration:
- Probe: ES3DV3 - SN3270; ConvF(4.95, 4.95, 4.95); Calibrated: 2014/9/26;
- Sensor-Surface: 2mm (Mechanical Surface Detection)
- Electronics: DAE4 Sn778; Calibrated: 2014/8/21
- Phantom: SAM_Left; Type: QD000P40CD; Serial: TP:1542
- Measurement SW: DASY52, Version 52.8 (7);SEMCAD X Version 14.6.10 (7164)

Configuration/Ch1413/Area Scan (71x121x1): Interpolated grid: dx=1.500 mm, dy=1.500 mm
Maximum value of SAR (interpolated) = 1.11 W/kg

Configuration/Ch1413/Zoom Scan (5x5x7)/Cube 0: Measurement grid: dx=8mm, dy=8mm, dz=5mm
Reference Value = 29.502 V/m; Power Drift = -0.04 dB
Peak SAR (extrapolated) = 1.42 W/kg
SAR(1 g) = 0.805 W/kg; SAR(10 g) = 0.465 W/kg
Maximum value of SAR (measured) = 1.08 W/kg

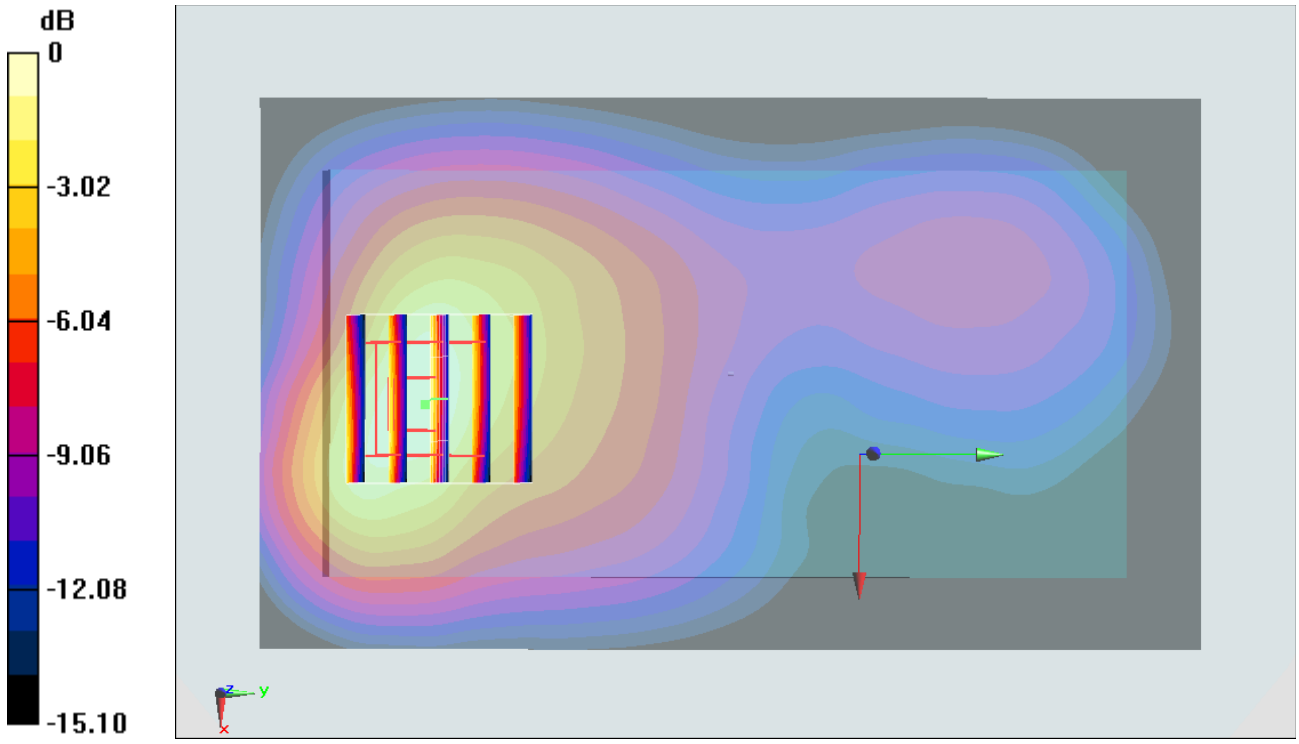

0 dB = 1.08 W/kg = 0.33 dBW/kg

#18_WCDMA II_RMC 12.2Kbps_Bottom Side_1cm_Ch9400

Communication System: WCDMA; Frequency: 1880 MHz;Duty Cycle: 1:1
Medium: MSL_1900_150215 Medium parameters used: f = 1880 MHz; σ = 1.505 S/m; ε_r = 53.303; ρ = 1000 kg/m^3
Ambient Temperature：23.3 ℃； Liquid Temperature：22.3 ℃

DASY5 Configuration:
- Probe: ES3DV3 - SN3270; ConvF(4.7, 4.7, 4.7); Calibrated: 2014/9/26;
- Sensor-Surface: 2mm (Mechanical Surface Detection)
- Electronics: DAE4 Sn778; Calibrated: 2014/8/21
- Phantom: SAM_Left; Type: QD000P40CD; Serial: TP:1542
- Measurement SW: DASY52, Version 52.8 (7);SEMCAD X Version 14.6.10 (7164)

Configuration/Ch9400/Area Scan (41x61x1): Interpolated grid: dx=1.500 mm, dy=1.500 mm
Maximum value of SAR (interpolated) = 0.940 W/kg

Configuration/Ch9400/Zoom Scan (5x5x7)/Cube 0: Measurement grid: dx=8mm, dy=8mm, dz=5mm
Reference Value = 27.720 V/m; Power Drift = -0.01 dB
Peak SAR (extrapolated) = 1.22 W/kg
SAR(1 g) = 0.714 W/kg; SAR(10 g) = 0.403 W/kg
Maximum value of SAR (measured) = 0.972 W/kg

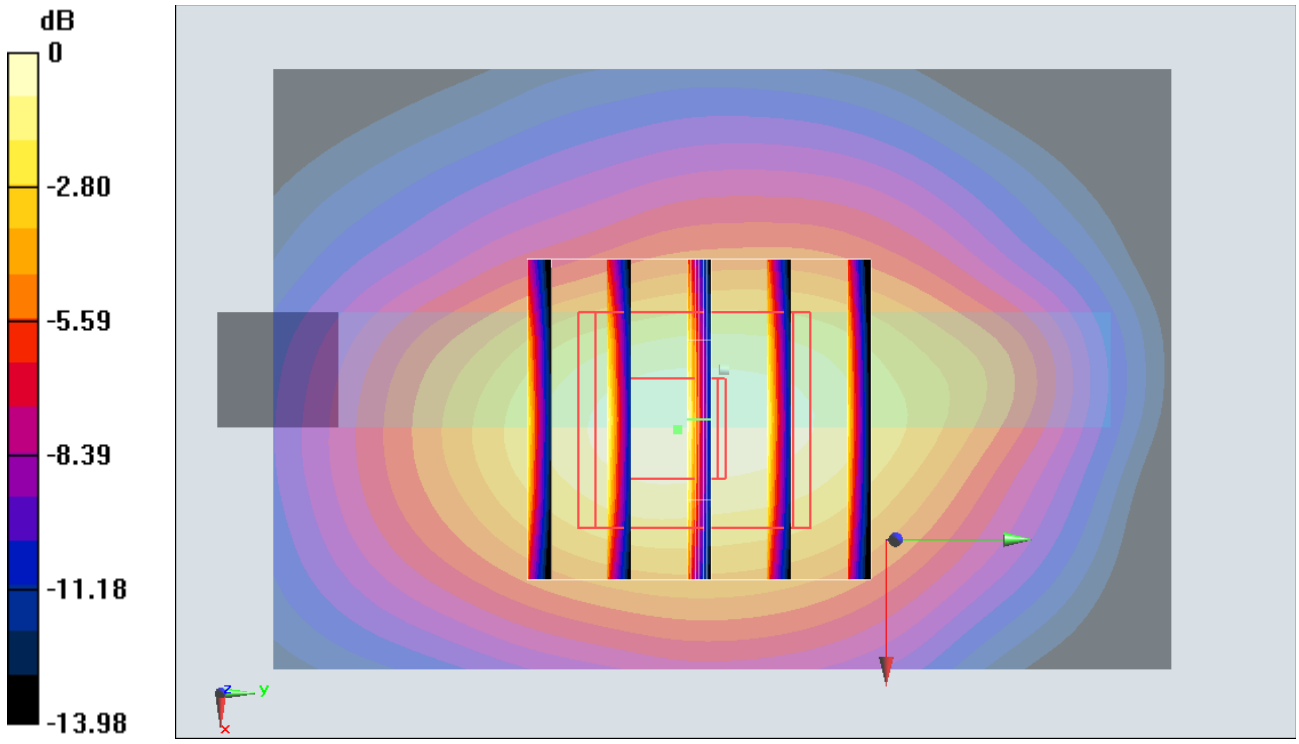

0 dB = 0.972 W/kg = -0.12 dBW/kg

#19_LTE Band 17_10M_QPSK_1RB_0offset_Back_1cm_Ch23800

Communication System: LTE; Frequency: 711 MHz;Duty Cycle: 1:1
Medium: MSL_750_150224 Medium parameters used: f = 711 MHz; σ = 0.936 S/m; ε_r = 56.824; ρ = 1000 kg/m^3
Ambient Temperature：23.4 ℃； Liquid Temperature：22.4 ℃

DASY5 Configuration:
- Probe: EX3DV4 - SN3925; ConvF(9.92, 9.92, 9.92); Calibrated: 2014/5/22;
- Sensor-Surface: 1.4mm (Mechanical Surface Detection)
- Electronics: DAE3 Sn495; Calibrated: 2014/5/19
- Phantom: SAM_Left; Type: QD000P40CD; Serial: TP:1542
- Measurement SW: DASY52, Version 52.8 (7);SEMCAD X Version 14.6.10 (7164)

Configuration/Ch23800/Area Scan (71x121x1): Interpolated grid: dx=1.500 mm, dy=1.500 mm
Maximum value of SAR (interpolated) = 0.172 W/kg

Configuration/Ch23800/Zoom Scan (5x5x7)/Cube 0: Measurement grid: dx=8mm, dy=8mm, dz=5mm
Reference Value = 14.357 V/m; Power Drift = 0.04 dB
Peak SAR (extrapolated) = 0.196 W/kg
SAR(1 g) = 0.151 W/kg; SAR(10 g) = 0.117 W/kg
Maximum value of SAR (measured) = 0.180 W/kg

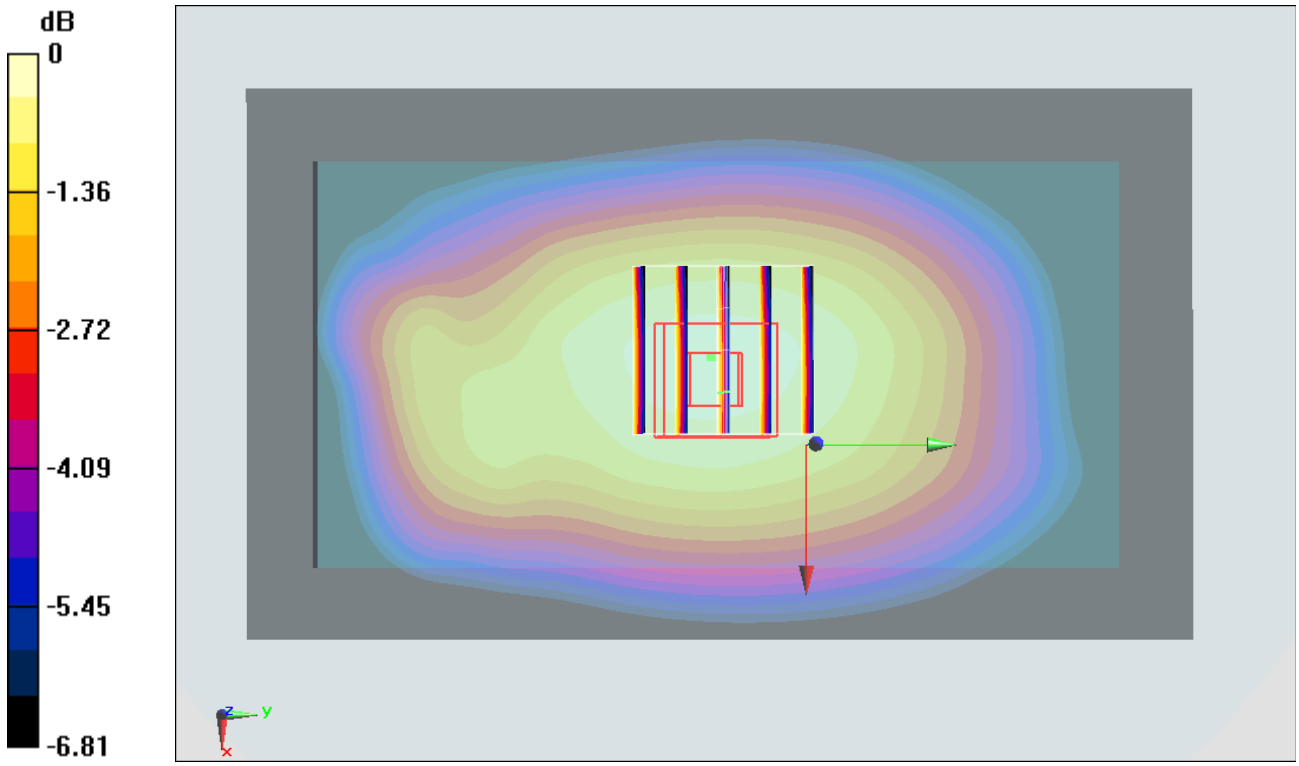

0 dB = 0.180 W/kg = -7.45 dBW/kg

#20_LTE Band 5_10M_QPSK_1RB_0offset_Right Side_1cm_Ch20450

Communication System: LTE; Frequency: 829 MHz;Duty Cycle: 1:1
Medium: MSL_850_150215 Medium parameters used: f = 829 MHz; σ = 0.96 S/m; ε_r = 54.848; ρ = 1000 kg/m^3
Ambient Temperature：23.3 ℃； Liquid Temperature：22.3 ℃

DASY5 Configuration:
- Probe: ES3DV3 - SN3270; ConvF(6.15, 6.15, 6.15); Calibrated: 2014/9/26;
- Sensor-Surface: 2mm (Mechanical Surface Detection)
- Electronics: DAE4 Sn778; Calibrated: 2014/8/21
- Phantom: SAM_Right; Type: QD000P40CC; Serial: TP:1383
- Measurement SW: DASY52, Version 52.8 (7);SEMCAD X Version 14.6.10 (7164)

Configuration/Ch20450/Area Scan (41x121x1): Interpolated grid: dx=1.500 mm, dy=1.500 mm
Maximum value of SAR (interpolated) = 0.416 W/kg

Configuration/Ch20450/Zoom Scan (5x5x7)/Cube 0: Measurement grid: dx=8mm, dy=8mm, dz=5mm
Reference Value = 22.546 V/m; Power Drift = 0.02 dB
Peak SAR (extrapolated) = 0.498 W/kg
SAR(1 g) = 0.339 W/kg; SAR(10 g) = 0.234 W/kg
Maximum value of SAR (measured) = 0.421 W/kg

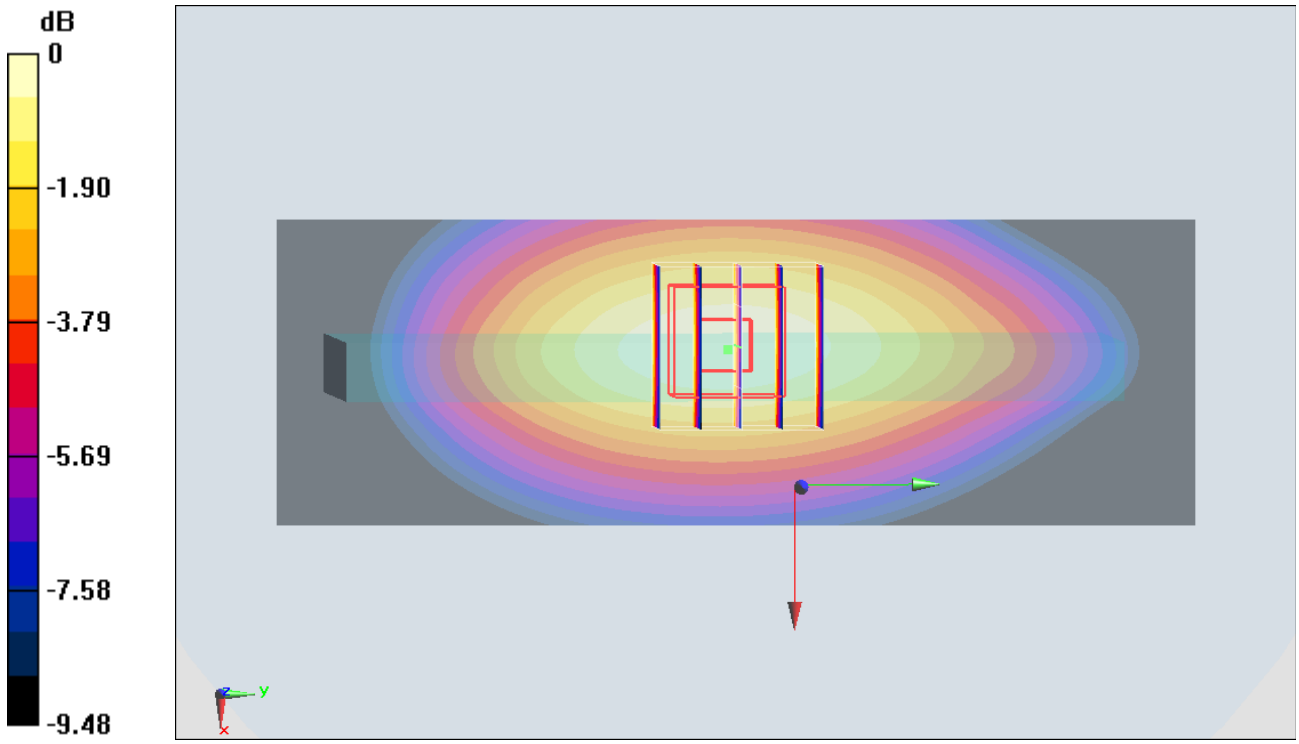

0 dB = 0.421 W/kg = -3.76 dBW/kg

#21_LTE Band 4_20M_QPSK_1RB_0offset_Back_1cm_Ch20300

Communication System: LTE; Frequency: 1745 MHz;Duty Cycle: 1:1
Medium: MSL_1750_150216 Medium parameters used: f = 1745 MHz; σ = 1.461 S/m; ε_r = 53.126; ρ = 1000 kg/m^3
Ambient Temperature：23.4 ℃； Liquid Temperature：22.4 ℃

DASY5 Configuration:
- Probe: ES3DV3 - SN3270; ConvF(4.95, 4.95, 4.95); Calibrated: 2014/9/26;
- Sensor-Surface: 2mm (Mechanical Surface Detection)
- Electronics: DAE4 Sn778; Calibrated: 2014/8/21
- Phantom: SAM_Left; Type: QD000P40CD; Serial: TP:1542
- Measurement SW: DASY52, Version 52.8 (7);SEMCAD X Version 14.6.10 (7164)

Configuration/Ch20300/Area Scan (71x121x1): Interpolated grid: dx=1.500 mm, dy=1.500 mm
Maximum value of SAR (interpolated) = 0.992 W/kg

Configuration/Ch20300/Zoom Scan (5x5x7)/Cube 0: Measurement grid: dx=8mm, dy=8mm, dz=5mm
Reference Value = 26.293 V/m; Power Drift = -0.09 dB
Peak SAR (extrapolated) = 1.16 W/kg
SAR(1 g) = 0.639 W/kg; SAR(10 g) = 0.369 W/kg
Maximum value of SAR (measured) = 0.857 W/kg

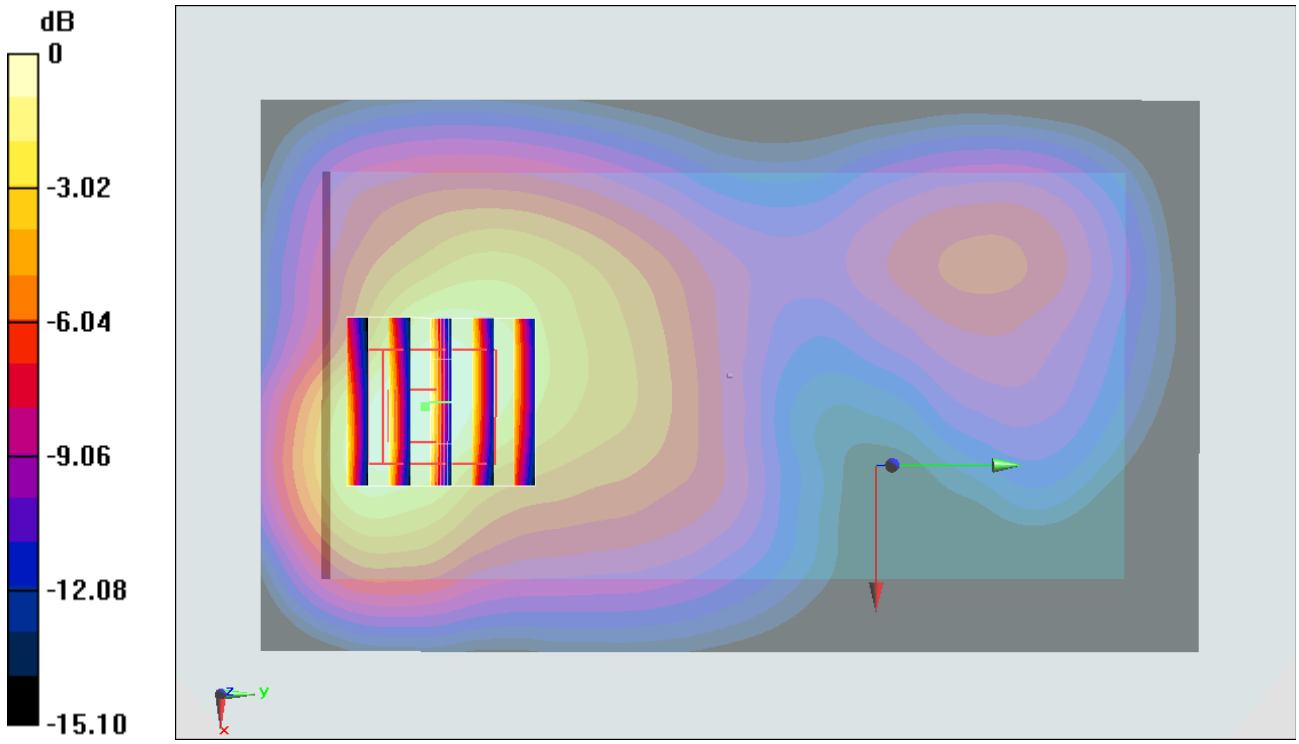

0 dB = 0.857 W/kg = -0.67 dBW/kg

#22_LTE Band 2_20M_QPSK_1RB_0offset_Bottom Side_1cm_Ch19100

Communication System: LTE; Frequency: 1900 MHz;Duty Cycle: 1:1
Medium: MSL_1900_150215 Medium parameters used: f = 1900 MHz; σ = 1.534 S/m; ε_r = 53.285; ρ = 1000 kg/m^3
Ambient Temperature：23.3 ℃； Liquid Temperature：22.3 ℃

DASY5 Configuration:
- Probe: ES3DV3 - SN3270; ConvF(4.7, 4.7, 4.7); Calibrated: 2014/9/26;
- Sensor-Surface: 2mm (Mechanical Surface Detection)
- Electronics: DAE4 Sn778; Calibrated: 2014/8/21
- Phantom: SAM_Left; Type: QD000P40CD; Serial: TP:1542
- Measurement SW: DASY52, Version 52.8 (7);SEMCAD X Version 14.6.10 (7164)

Configuration/Ch19100/Area Scan (41x61x1): Interpolated grid: dx=1.500 mm, dy=1.500 mm
Maximum value of SAR (interpolated) = 0.881 W/kg

Configuration/Ch19100/Zoom Scan (5x5x7)/Cube 0: Measurement grid: dx=8mm, dy=8mm, dz=5mm
Reference Value = 25.699 V/m; Power Drift = 0.09 dB
Peak SAR (extrapolated) = 1.09 W/kg
SAR(1 g) = 0.633 W/kg; SAR(10 g) = 0.351 W/kg
Maximum value of SAR (measured) = 0.850 W/kg

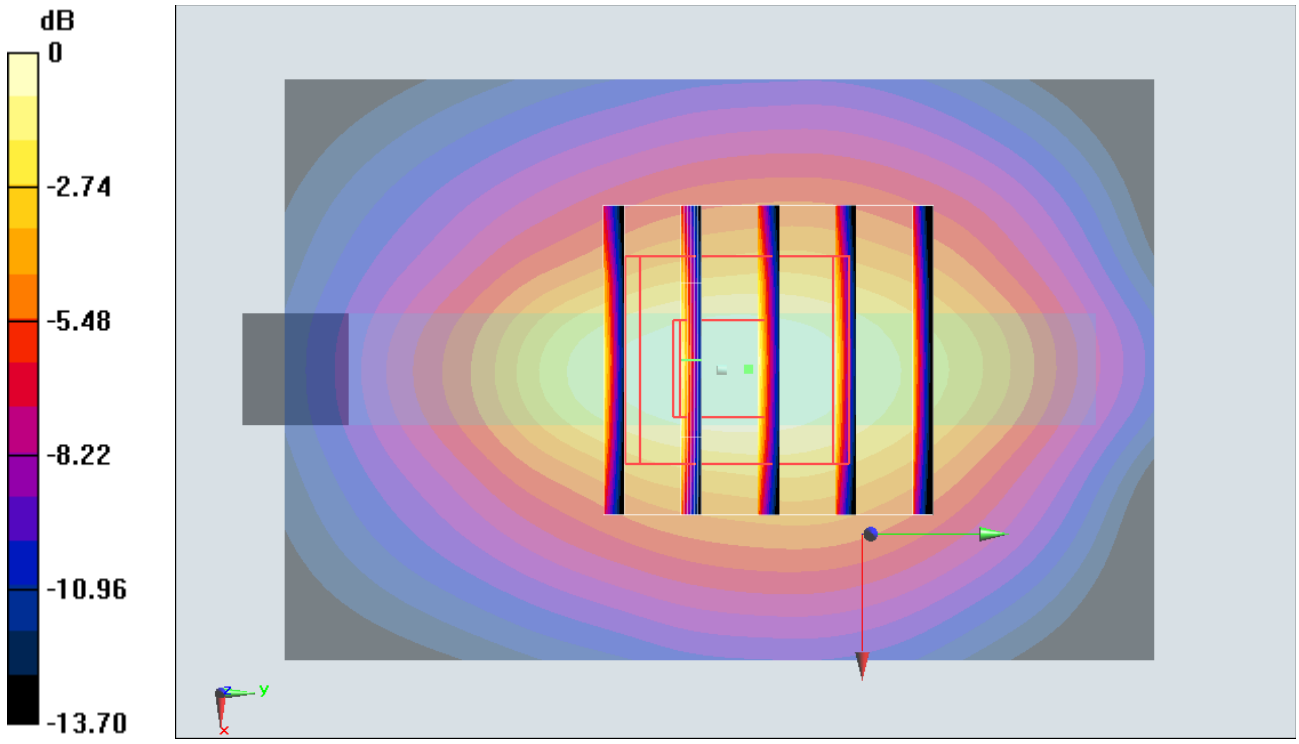

0 dB = 0.850 W/kg = -0.71 dBW/kg

#23_LTE Band 7_20M_QPSK_1RB_0offset_Back_1cm_Ch21350

Communication System: LTE; Frequency: 2560 MHz;Duty Cycle: 1:1
Medium: MSL_2600_150225 Medium parameters used: f = 2560 MHz; σ = 2.149 S/m; ε_r = 52.782; ρ = 1000 kg/m^3
Ambient Temperature：23.3 ℃； Liquid Temperature：22.3 ℃

DASY5 Configuration:
- Probe: EX3DV4 - SN3955; ConvF(7.09, 7.09, 7.09); Calibrated: 2014/11/21;
- Sensor-Surface: 1.4mm (Mechanical Surface Detection)
- Electronics: DAE4 Sn1399; Calibrated: 2014/11/13
- Phantom: SAM-Left; Type: QD 000 P40 C; Serial: TP-1478
- Measurement SW: DASY52, Version 52.8 (8);SEMCAD X Version 14.6.10 (7331)

Configuration/Ch21350/Area Scan (81x151x1): Interpolated grid: dx=1.200 mm, dy=1.200 mm
Maximum value of SAR (interpolated) = 0.808 W/kg

Configuration/Ch21350/Zoom Scan (7x7x7)/Cube 0: Measurement grid: dx=5mm, dy=5mm, dz=5mm
Reference Value = 22.46 V/m; Power Drift = -0.12 dB
Peak SAR (extrapolated) = 1.18 W/kg
SAR(1 g) = 0.563 W/kg; SAR(10 g) = 0.243 W/kg
Maximum value of SAR (measured) = 0.925 W/kg

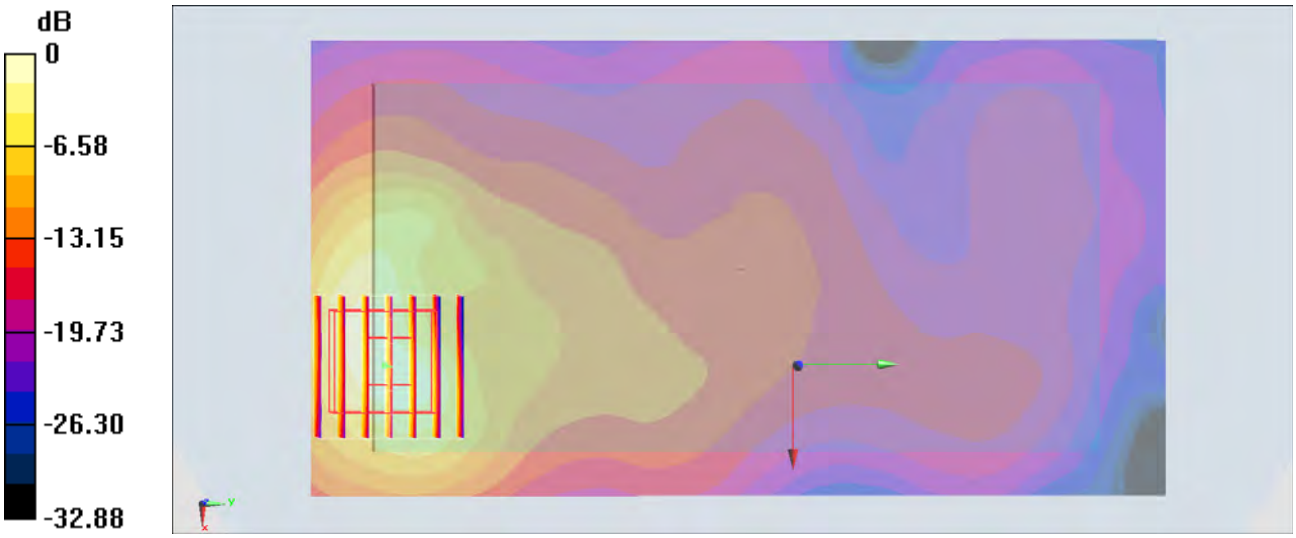

0 dB = 0.925 W/kg = -0.34 dBW/kg

#24_WLAN2.4GHz_802.11b 1Mbps_Back_1cm_Ch11

Communication System: 802.11b ; Frequency: 2462 MHz;Duty Cycle: 1:1.012
Medium: MSL_2450_150226 Medium parameters used: f = 2462 MHz; σ = 2.018 S/m; ε_r = 51.189; ρ = 1000 kg/m^3
Ambient Temperature：23.3 ℃； Liquid Temperature：22.3 ℃

DASY5 Configuration:
- Probe: EX3DV4 - SN3925; ConvF(7.36, 7.36, 7.36); Calibrated: 2014/5/22;
- Sensor-Surface: 1.4mm (Mechanical Surface Detection)
- Electronics: DAE3 Sn495; Calibrated: 2014/5/19
- Phantom: SAM_Right; Type: QD000P40CC; Serial: TP:1383
- Measurement SW: DASY52, Version 52.8 (7);SEMCAD X Version 14.6.10 (7164)

Configuration/Ch11/Area Scan (81x151x1): Interpolated grid: dx=1.200 mm, dy=1.200 mm
Maximum value of SAR (interpolated) = 0.213 W/kg

Configuration/Ch11/Zoom Scan (7x7x7)/Cube 0: Measurement grid: dx=5mm, dy=5mm, dz=5mm
Reference Value = 10.315 V/m; Power Drift = -0.14 dB
Peak SAR (extrapolated) = 0.267 W/kg
SAR(1 g) = 0.125 W/kg; SAR(10 g) = 0.055 W/kg
Maximum value of SAR (measured) = 0.203 W/kg

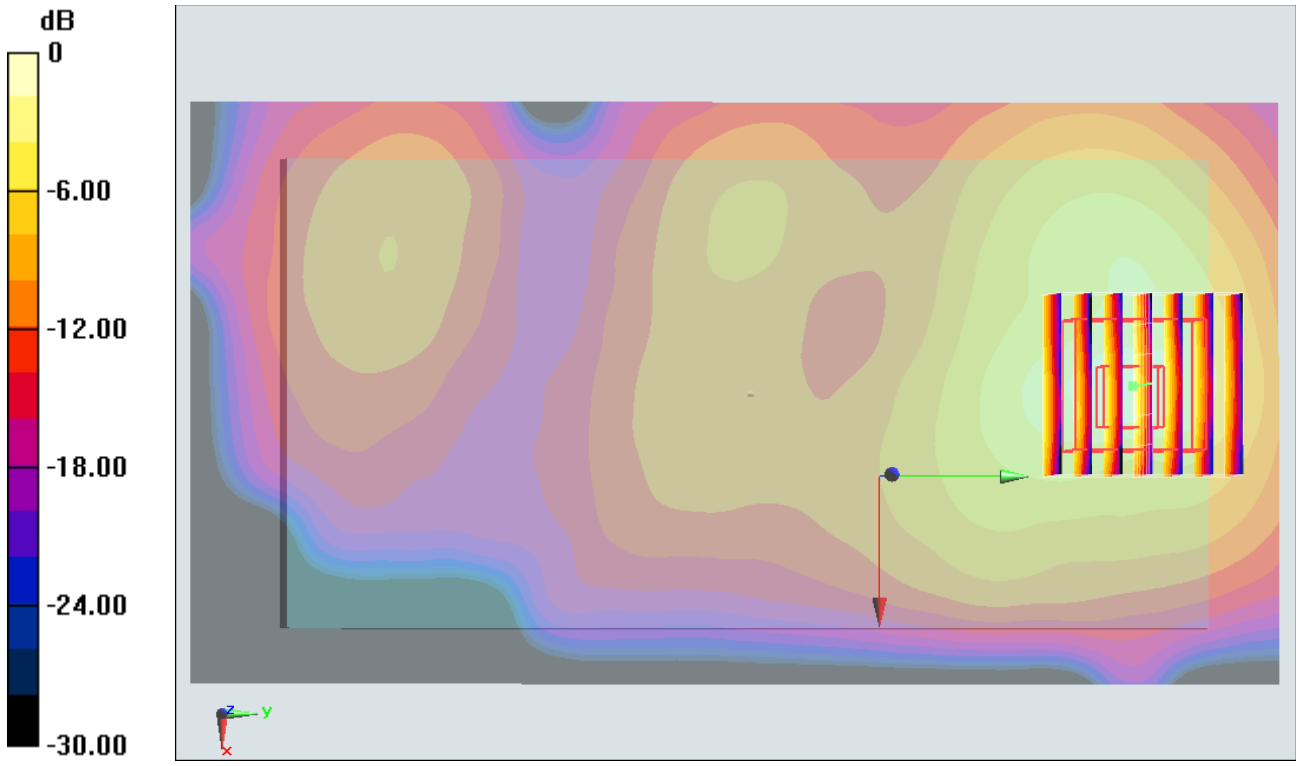

0 dB = 0.203 W/kg = -6.93 dBW/kg

#25_WLAN5GHz_802.11a 6Mbps_Back_1cm_Ch157

Communication System: 802.11a ; Frequency: 5785 MHz;Duty Cycle: 1:1.077
Medium: MSL_5G_150225 Medium parameters used: f = 5785 MHz; σ = 6.113 S/m; ε_r = 46.528; ρ = 1000 kg/m^3
Ambient Temperature：23.5 ℃； Liquid Temperature：22.5 ℃

DASY5 Configuration:
- Probe: EX3DV4 - SN3925; ConvF(4.09, 4.09, 4.09); Calibrated: 2014/5/22;
- Sensor-Surface: 1.4mm (Mechanical Surface Detection)
- Electronics: DAE3 Sn495; Calibrated: 2014/5/19
- Phantom: SAM_Right; Type: QD000P40CC; Serial: TP:1383
- Measurement SW: DASY52, Version 52.8 (7);SEMCAD X Version 14.6.10 (7164)

Configuration/Ch157/Area Scan (91x181x1): Interpolated grid: dx=1.000 mm, dy=1.000 mm
Maximum value of SAR (interpolated) = 0.469 W/kg

Configuration/Ch157/Zoom Scan (7x7x7)/Cube 0: Measurement grid: dx=4mm, dy=4mm, dz=1.4mm
Reference Value = 10.077 V/m; Power Drift = -0.04 dB
Peak SAR (extrapolated) = 0.786 W/kg
SAR(1 g) = 0.178 W/kg; SAR(10 g) = 0.055 W/kg
Maximum value of SAR (measured) = 0.455 W/kg

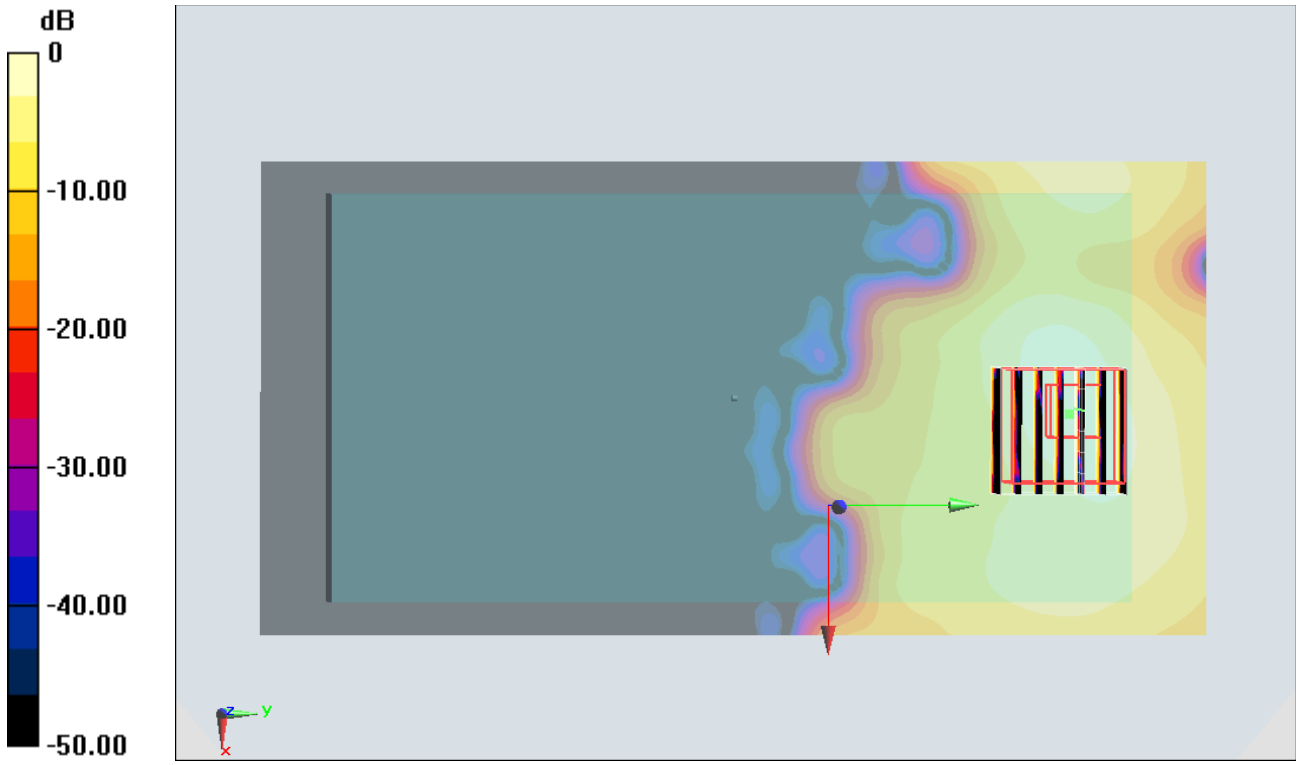

0 dB = 0.455 W/kg = -3.42 dBW/kg

#26_GSM850_GPRS (2 Tx slots)_Back_1cm_Ch128

Communication System: GSM850; Frequency: 824.2 MHz;Duty Cycle: 1:4.15
Medium: MSL_850_150215 Medium parameters used: f = 824.2 MHz; σ = 0.955 S/m; ε_r = 54.896; ρ = 1000 kg/m^3
Ambient Temperature：23.3 ℃； Liquid Temperature：22.3 ℃

DASY5 Configuration:
- Probe: ES3DV3 - SN3270; ConvF(6.15, 6.15, 6.15); Calibrated: 2014/9/26;
- Sensor-Surface: 2mm (Mechanical Surface Detection)
- Electronics: DAE4 Sn778; Calibrated: 2014/8/21
- Phantom: SAM_Right; Type: QD000P40CC; Serial: TP:1383
- Measurement SW: DASY52, Version 52.8 (7);SEMCAD X Version 14.6.10 (7164)

Configuration/Ch128/Area Scan (71x121x1): Interpolated grid: dx=1.500 mm, dy=1.500 mm
Maximum value of SAR (interpolated) = 0.430 W/kg

Configuration/Ch128/Zoom Scan (5x5x7)/Cube 0: Measurement grid: dx=8mm, dy=8mm, dz=5mm
Reference Value = 23.095 V/m; Power Drift = 0.01 dB
Peak SAR (extrapolated) = 0.493 W/kg
SAR(1 g) = 0.370 W/kg; SAR(10 g) = 0.282 W/kg
Maximum value of SAR (measured) = 0.434 W/kg

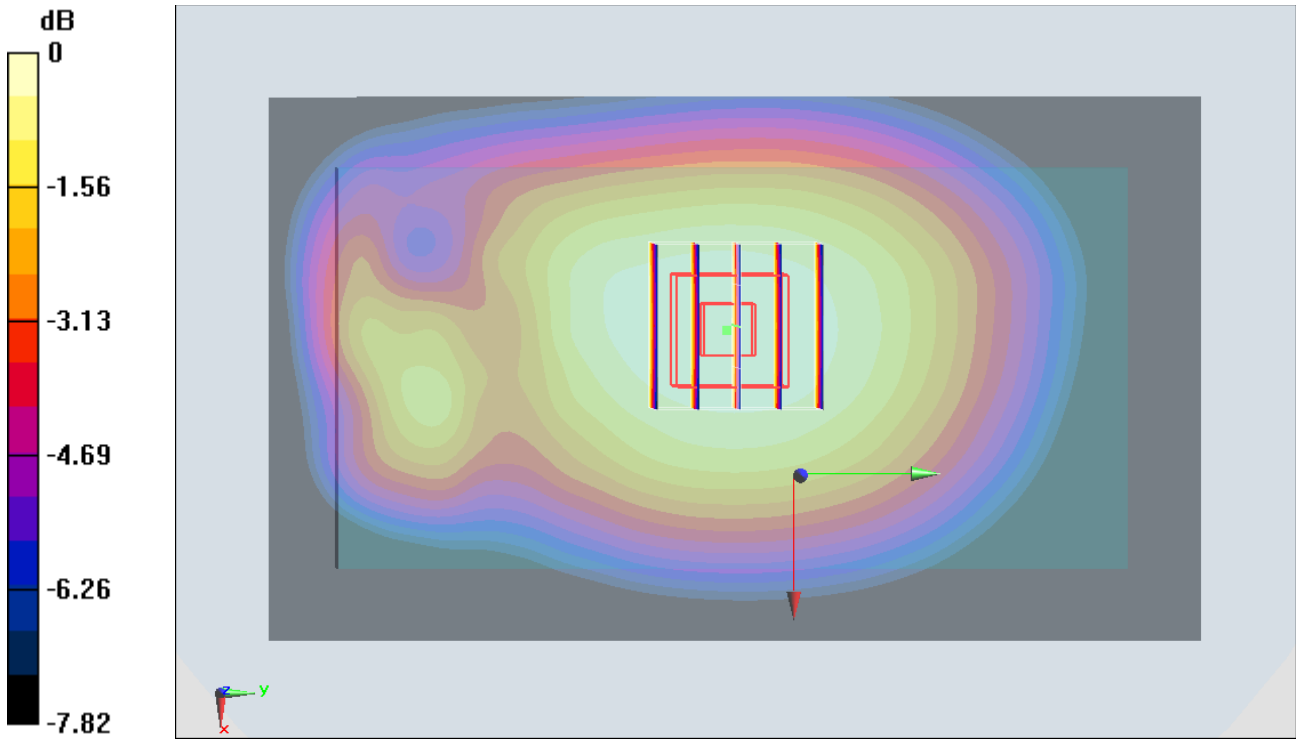

0 dB = 0.434 W/kg = -3.63 dBW/kg

#27_GSM1900_GPRS (2 Tx slots)_Back_1cm_Ch810

Communication System: PCS; Frequency: 1909.8 MHz;Duty Cycle: 1:4.15
Medium: MSL_1900_150215 Medium parameters used: f = 1910 MHz; σ = 1.546 S/m; ε_r = 53.273; ρ = 1000 kg/m^3
Ambient Temperature：23.3 ℃； Liquid Temperature：22.3 ℃

DASY5 Configuration:
- Probe: ES3DV3 - SN3270; ConvF(4.7, 4.7, 4.7); Calibrated: 2014/9/26;
- Sensor-Surface: 2mm (Mechanical Surface Detection)
- Electronics: DAE4 Sn778; Calibrated: 2014/8/21
- Phantom: SAM_Left; Type: QD000P40CD; Serial: TP:1542
- Measurement SW: DASY52, Version 52.8 (7);SEMCAD X Version 14.6.10 (7164)

Configuration/Ch810/Area Scan (71x121x1): Interpolated grid: dx=1.500 mm, dy=1.500 mm
Maximum value of SAR (interpolated) = 0.433 W/kg

Configuration/Ch810/Zoom Scan (5x5x7)/Cube 0: Measurement grid: dx=8mm, dy=8mm, dz=5mm
Reference Value = 18.021 V/m; Power Drift = -0.11 dB
Peak SAR (extrapolated) = 0.569 W/kg
SAR(1 g) = 0.311 W/kg; SAR(10 g) = 0.177 W/kg
Maximum value of SAR (measured) = 0.415 W/kg

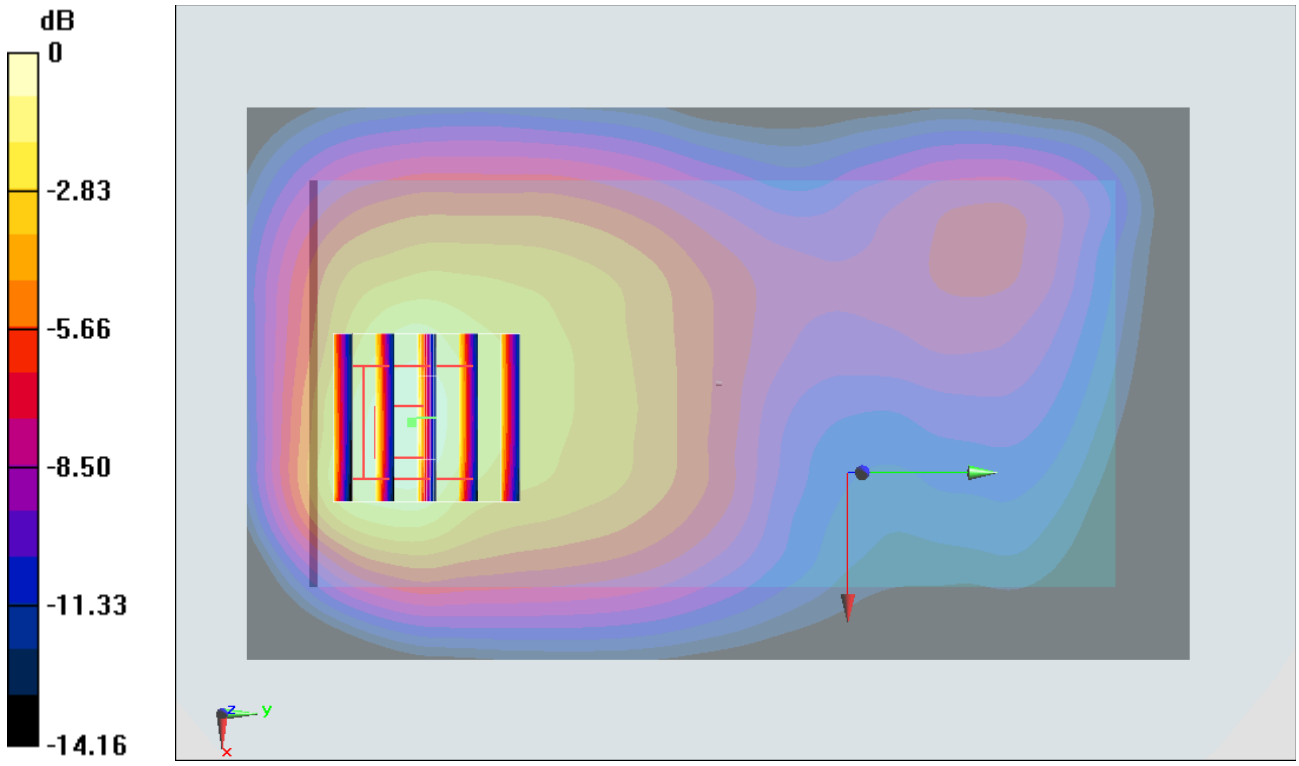

0 dB = 0.415 W/kg = -3.82 dBW/kg

#28_WCDMA V_RMC 12.2Kbps_Back_1cm_Ch4132

Communication System: WCDMA; Frequency: 826.4 MHz;Duty Cycle: 1:1
Medium: MSL_850_150215 Medium parameters used: f = 826.4 MHz; σ = 0.957 S/m; ε_r = 54.875; ρ = 1000 kg/m^3
Ambient Temperature：23.3 ℃； Liquid Temperature：22.3 ℃

DASY5 Configuration:
- Probe: ES3DV3 - SN3270; ConvF(6.15, 6.15, 6.15); Calibrated: 2014/9/26;
- Sensor-Surface: 2mm (Mechanical Surface Detection)
- Electronics: DAE4 Sn778; Calibrated: 2014/8/21
- Phantom: SAM_Right; Type: QD000P40CC; Serial: TP:1383
- Measurement SW: DASY52, Version 52.8 (7);SEMCAD X Version 14.6.10 (7164)

Configuration/Ch4132/Area Scan (71x121x1): Interpolated grid: dx=1.500 mm, dy=1.500 mm
Maximum value of SAR (interpolated) = 0.420 W/kg

Configuration/Ch4132/Zoom Scan (5x5x7)/Cube 0: Measurement grid: dx=8mm, dy=8mm, dz=5mm
Reference Value = 22.635 V/m; Power Drift = -0.00 dB
Peak SAR (extrapolated) = 0.472 W/kg
SAR(1 g) = 0.359 W/kg; SAR(10 g) = 0.273 W/kg
Maximum value of SAR (measured) = 0.418 W/kg

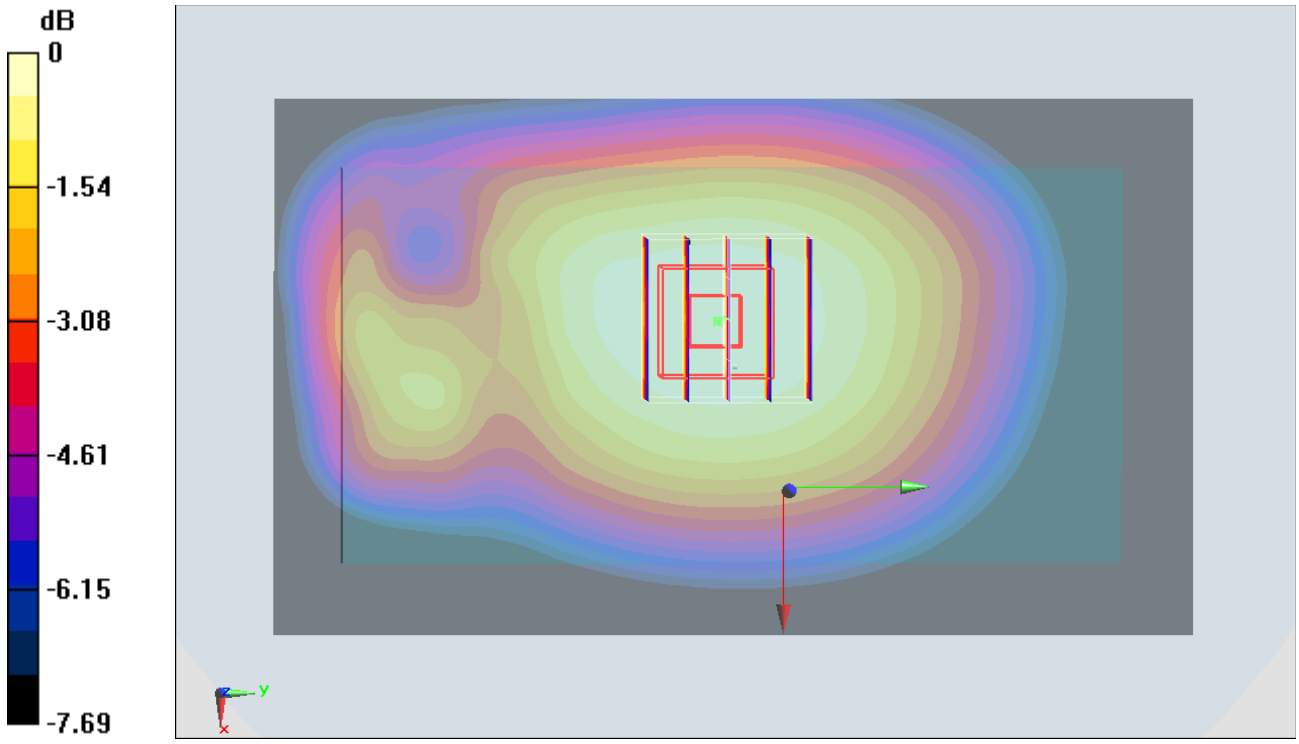

0 dB = 0.418 W/kg = -3.79 dBW/kg

#29_WCDMA IV_RMC 12.2Kbps_Back_1cm_Ch1413

Communication System: WCDMA; Frequency: 1732.6 MHz;Duty Cycle: 1:1
Medium: MSL_1750_150216 Medium parameters used: f = 1733 MHz; σ = 1.451 S/m; ε_r = 53.153; ρ = 1000 kg/m^3
Ambient Temperature：23.4 ℃； Liquid Temperature：22.4 ℃

DASY5 Configuration:
- Probe: ES3DV3 - SN3270; ConvF(4.95, 4.95, 4.95); Calibrated: 2014/9/26;
- Sensor-Surface: 2mm (Mechanical Surface Detection)
- Electronics: DAE4 Sn778; Calibrated: 2014/8/21
- Phantom: SAM_Left; Type: QD000P40CD; Serial: TP:1542
- Measurement SW: DASY52, Version 52.8 (7);SEMCAD X Version 14.6.10 (7164)

Configuration/Ch1413/Area Scan (71x121x1): Interpolated grid: dx=1.500 mm, dy=1.500 mm
Maximum value of SAR (interpolated) = 1.11 W/kg

Configuration/Ch1413/Zoom Scan (5x5x7)/Cube 0: Measurement grid: dx=8mm, dy=8mm, dz=5mm
Reference Value = 29.502 V/m; Power Drift = -0.04 dB
Peak SAR (extrapolated) = 1.42 W/kg
SAR(1 g) = 0.805 W/kg; SAR(10 g) = 0.465 W/kg
Maximum value of SAR (measured) = 1.08 W/kg

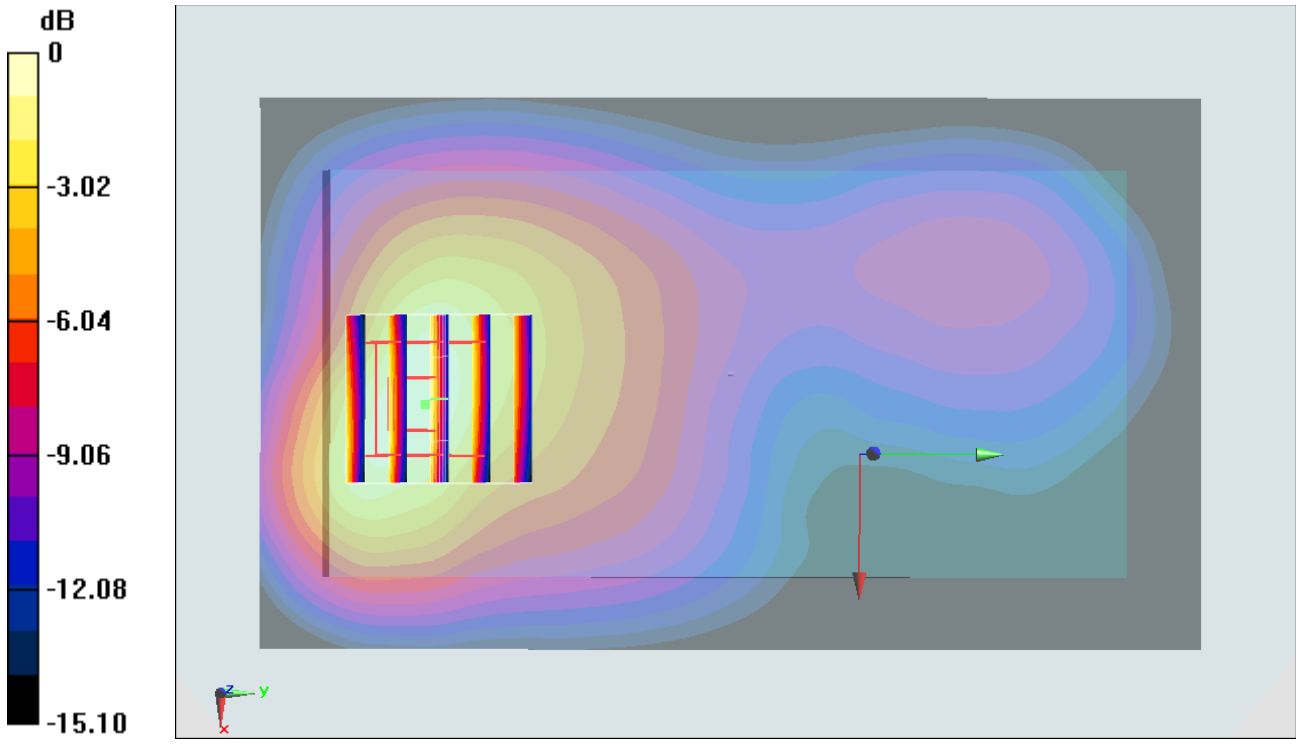

0 dB = 1.08 W/kg = 0.33 dBW/kg

#30_WCDMA II_RMC 12.2Kbps_Back_1cm_Ch9538

Communication System: WCDMA; Frequency: 1907.6 MHz;Duty Cycle: 1:1
Medium: MSL_1900_150215 Medium parameters used: f = 1908 MHz; σ = 1.544 S/m; ε_r = 53.278; ρ = 1000 kg/m^3
Ambient Temperature：23.3 ℃； Liquid Temperature：22.3 ℃

DASY5 Configuration:
- Probe: ES3DV3 - SN3270; ConvF(4.7, 4.7, 4.7); Calibrated: 2014/9/26;
- Sensor-Surface: 2mm (Mechanical Surface Detection)
- Electronics: DAE4 Sn778; Calibrated: 2014/8/21
- Phantom: SAM_Left; Type: QD000P40CD; Serial: TP:1542
- Measurement SW: DASY52, Version 52.8 (7);SEMCAD X Version 14.6.10 (7164)

Configuration/Ch9538/Area Scan (71x121x1): Interpolated grid: dx=1.500 mm, dy=1.500 mm
Maximum value of SAR (interpolated) = 0.909 W/kg

Configuration/Ch9538/Zoom Scan (5x5x7)/Cube 0: Measurement grid: dx=8mm, dy=8mm, dz=5mm
Reference Value = 26.227 V/m; Power Drift = -0.02 dB
Peak SAR (extrapolated) = 1.20 W/kg
SAR(1 g) = 0.643 W/kg; SAR(10 g) = 0.359 W/kg
Maximum value of SAR (measured) = 0.876 W/kg

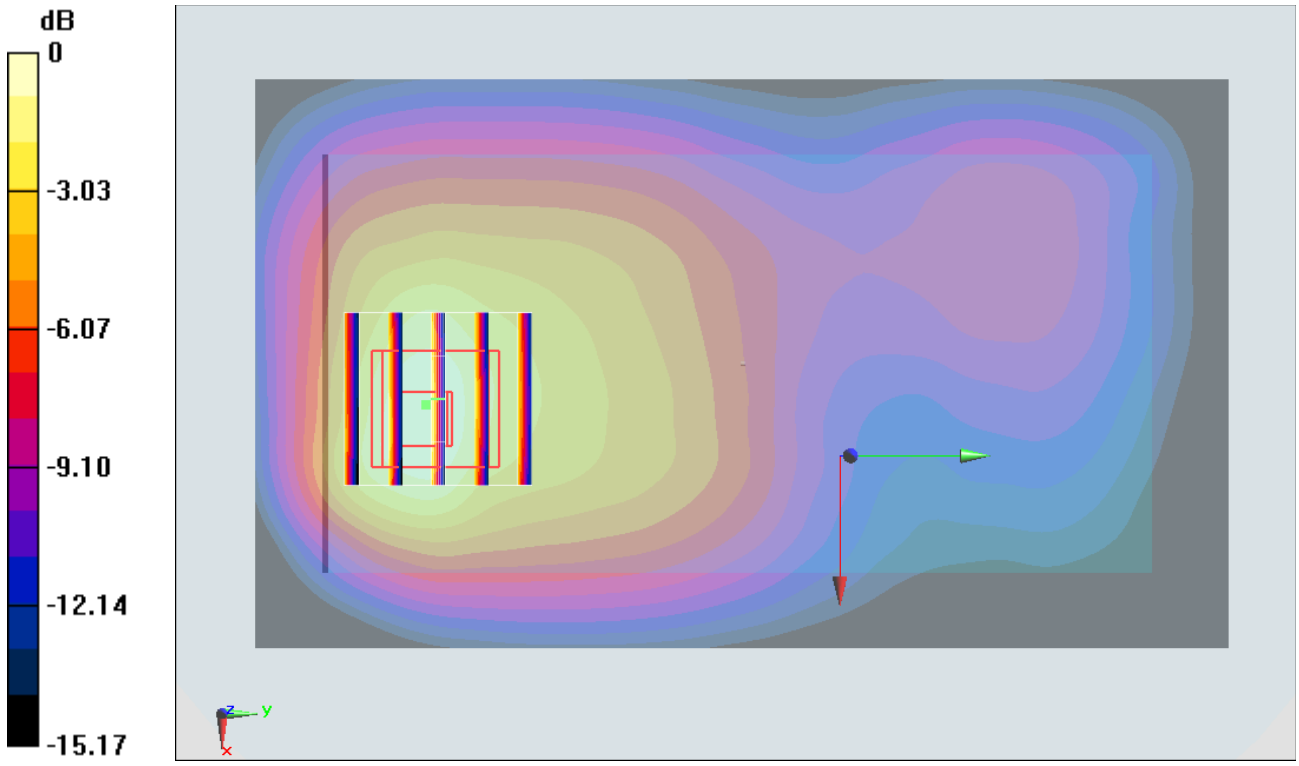

0 dB = 0.876 W/kg = -0.57 dBW/kg

#31_LTE Band 17_10M_QPSK_1RB_0offset_Back_1cm_Ch23800

Communication System: LTE; Frequency: 711 MHz;Duty Cycle: 1:1
Medium: MSL_750_150224 Medium parameters used: f = 711 MHz; σ = 0.936 S/m; ε_r = 56.824; ρ = 1000 kg/m^3
Ambient Temperature：23.4 ℃； Liquid Temperature：22.4 ℃

DASY5 Configuration:
- Probe: EX3DV4 - SN3925; ConvF(9.92, 9.92, 9.92); Calibrated: 2014/5/22;
- Sensor-Surface: 1.4mm (Mechanical Surface Detection)
- Electronics: DAE3 Sn495; Calibrated: 2014/5/19
- Phantom: SAM_Left; Type: QD000P40CD; Serial: TP:1542
- Measurement SW: DASY52, Version 52.8 (7);SEMCAD X Version 14.6.10 (7164)

Configuration/Ch23800/Area Scan (71x121x1): Interpolated grid: dx=1.500 mm, dy=1.500 mm
Maximum value of SAR (interpolated) = 0.172 W/kg

Configuration/Ch23800/Zoom Scan (5x5x7)/Cube 0: Measurement grid: dx=8mm, dy=8mm, dz=5mm
Reference Value = 14.357 V/m; Power Drift = 0.04 dB
Peak SAR (extrapolated) = 0.196 W/kg
SAR(1 g) = 0.151 W/kg; SAR(10 g) = 0.117 W/kg
Maximum value of SAR (measured) = 0.180 W/kg

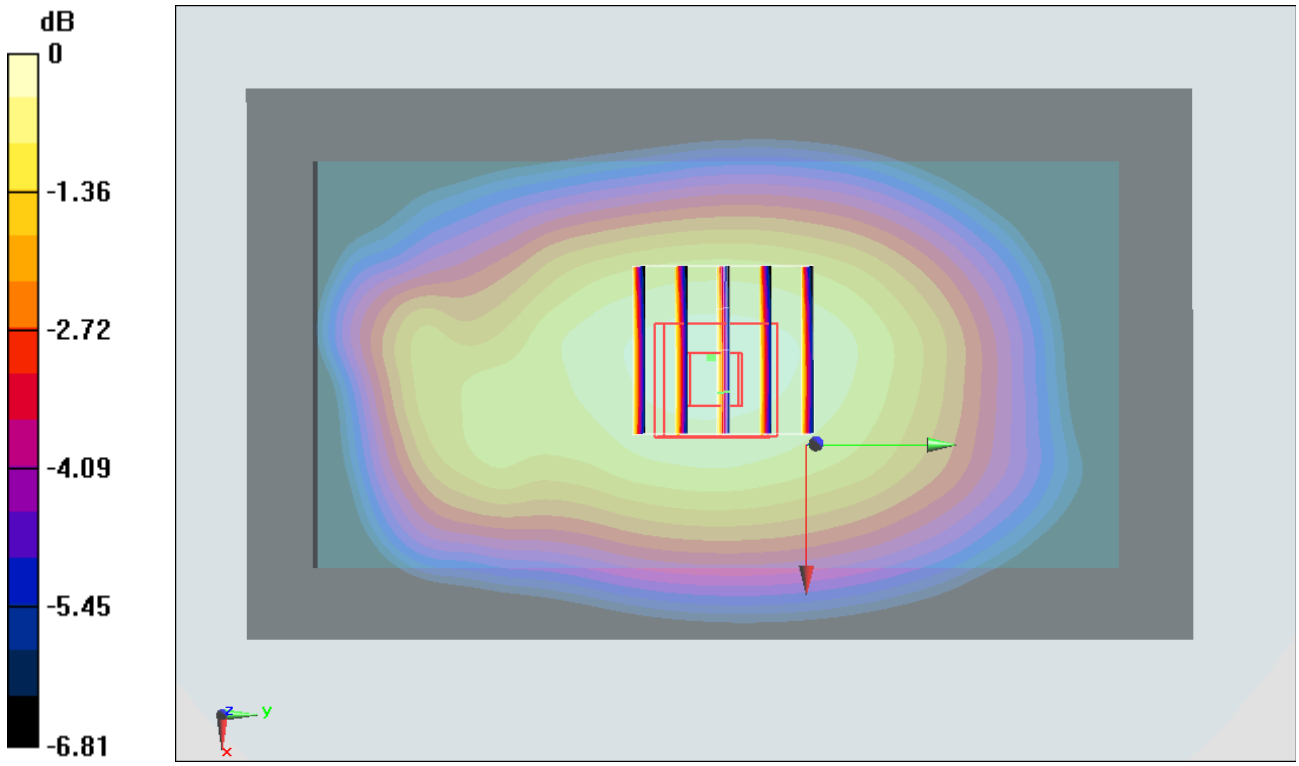

0 dB = 0.180 W/kg = -7.45 dBW/kg

#32_LTE Band 5_10M_QPSK_1RB_0offset_Back_1cm_Ch20600

Communication System: LTE; Frequency: 844 MHz;Duty Cycle: 1:1
Medium: MSL_850_150215 Medium parameters used: f = 844 MHz; σ = 0.975 S/m; ε_r = 54.706; ρ = 1000 kg/m^3
Ambient Temperature：23.3 ℃； Liquid Temperature：22.3 ℃

DASY5 Configuration:
- Probe: ES3DV3 - SN3270; ConvF(6.15, 6.15, 6.15); Calibrated: 2014/9/26;
- Sensor-Surface: 2mm (Mechanical Surface Detection)
- Electronics: DAE4 Sn778; Calibrated: 2014/8/21
- Phantom: SAM_Right; Type: QD000P40CC; Serial: TP:1383
- Measurement SW: DASY52, Version 52.8 (7);SEMCAD X Version 14.6.10 (7164)

Configuration/Ch20600/Area Scan (71x121x1): Interpolated grid: dx=1.500 mm, dy=1.500 mm
Maximum value of SAR (interpolated) = 0.377 W/kg

Configuration/Ch20600/Zoom Scan (5x5x7)/Cube 0: Measurement grid: dx=8mm, dy=8mm, dz=5mm
Reference Value = 20.482 V/m; Power Drift = 0.05 dB
Peak SAR (extrapolated) = 0.397 W/kg
SAR(1 g) = 0.299 W/kg; SAR(10 g) = 0.227 W/kg
Maximum value of SAR (measured) = 0.351 W/kg

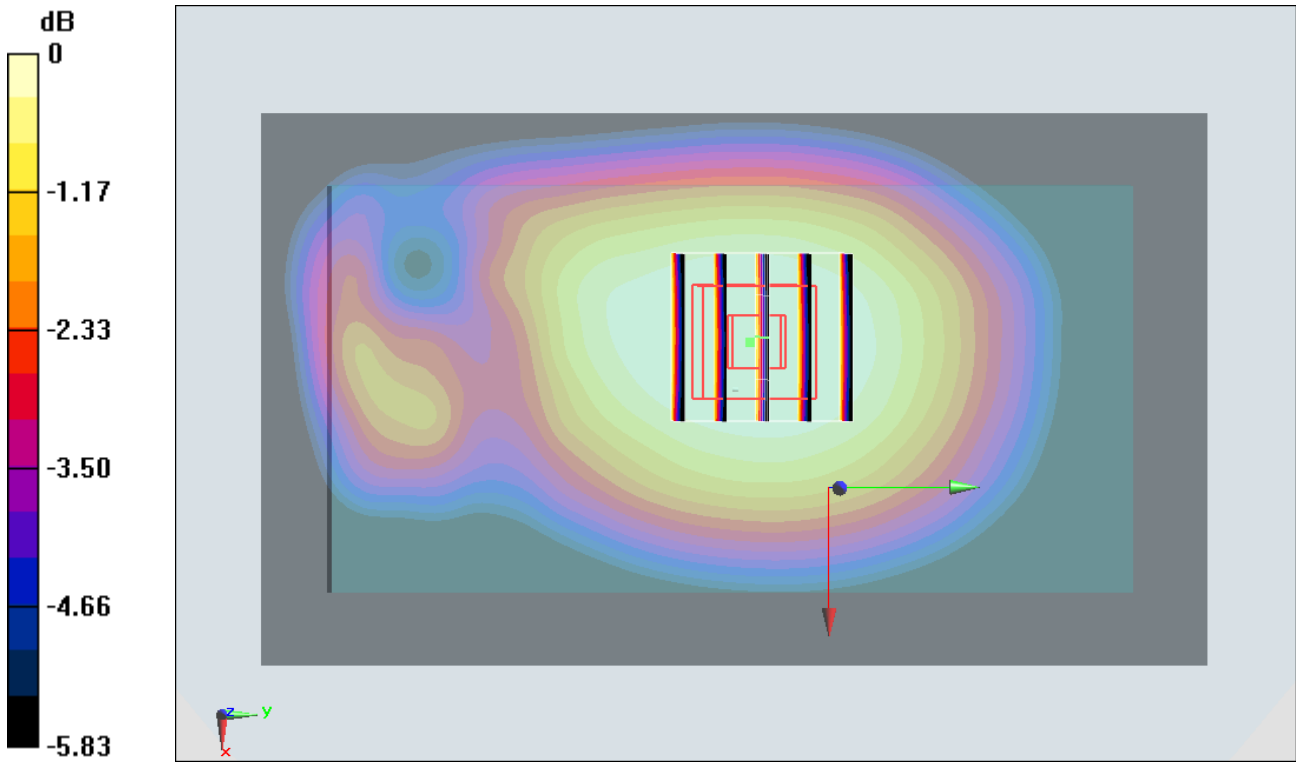

0 dB = 0.351 W/kg = -4.55 dBW/kg

#33_LTE Band 4_20M_QPSK_1RB_0offset_Back_1cm_Ch20300

Communication System: LTE; Frequency: 1745 MHz;Duty Cycle: 1:1
Medium: MSL_1750_150216 Medium parameters used: f = 1745 MHz; σ = 1.461 S/m; ε_r = 53.126; ρ = 1000 kg/m^3
Ambient Temperature：23.4 ℃； Liquid Temperature：22.4 ℃

DASY5 Configuration:
- Probe: ES3DV3 - SN3270; ConvF(4.95, 4.95, 4.95); Calibrated: 2014/9/26;
- Sensor-Surface: 2mm (Mechanical Surface Detection)
- Electronics: DAE4 Sn778; Calibrated: 2014/8/21
- Phantom: SAM_Left; Type: QD000P40CD; Serial: TP:1542
- Measurement SW: DASY52, Version 52.8 (7);SEMCAD X Version 14.6.10 (7164)

Configuration/Ch20300/Area Scan (71x121x1): Interpolated grid: dx=1.500 mm, dy=1.500 mm
Maximum value of SAR (interpolated) = 0.992 W/kg

Configuration/Ch20300/Zoom Scan (5x5x7)/Cube 0: Measurement grid: dx=8mm, dy=8mm, dz=5mm
Reference Value = 26.293 V/m; Power Drift = -0.09 dB
Peak SAR (extrapolated) = 1.16 W/kg
SAR(1 g) = 0.639 W/kg; SAR(10 g) = 0.369 W/kg
Maximum value of SAR (measured) = 0.857 W/kg

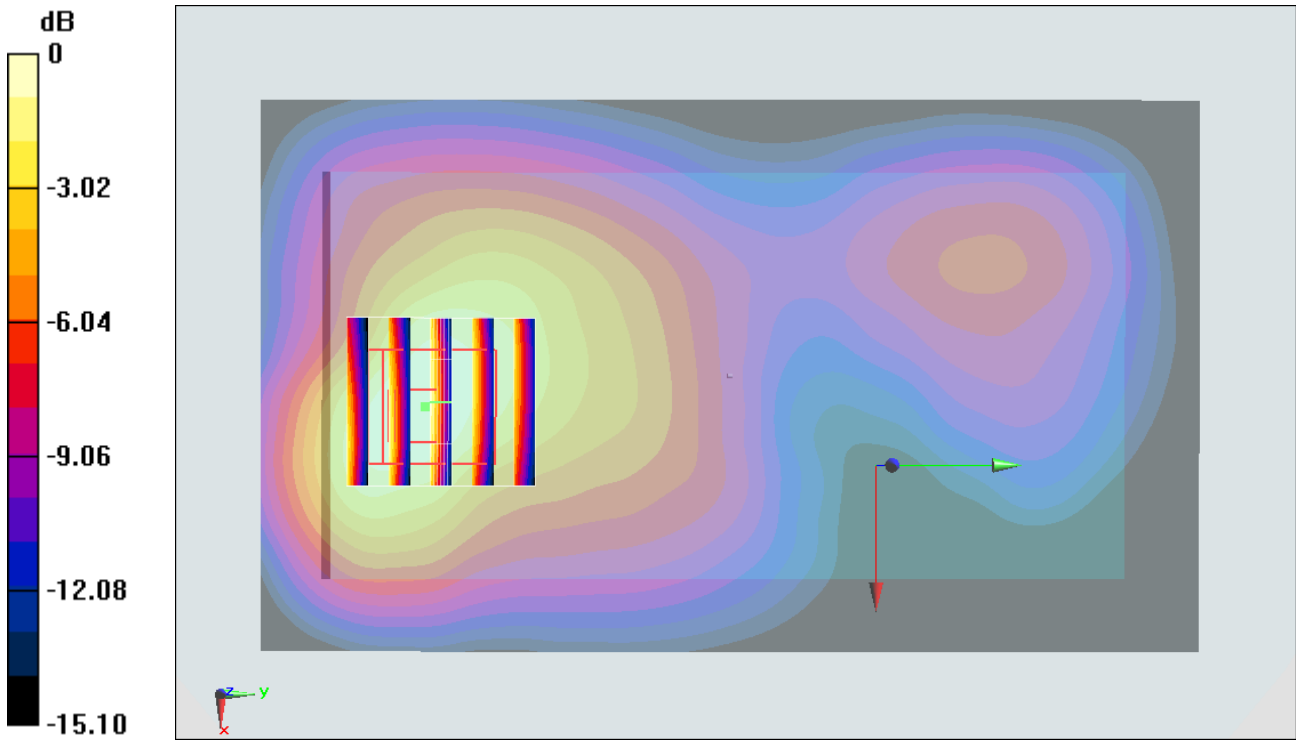

0 dB = 0.857 W/kg = -0.67 dBW/kg

#34_LTE Band 2_20M_QPSK_1RB_0offset_Back_1cm_Ch19100

Communication System: LTE; Frequency: 1900 MHz;Duty Cycle: 1:1
Medium: MSL_1900_150215 Medium parameters used: f = 1900 MHz; σ = 1.534 S/m; ε_r = 53.285; ρ = 1000 kg/m^3
Ambient Temperature：23.3 ℃； Liquid Temperature：22.3 ℃

DASY5 Configuration:
- Probe: ES3DV3 - SN3270; ConvF(4.7, 4.7, 4.7); Calibrated: 2014/9/26;
- Sensor-Surface: 2mm (Mechanical Surface Detection)
- Electronics: DAE4 Sn778; Calibrated: 2014/8/21
- Phantom: SAM_Left; Type: QD000P40CD; Serial: TP:1542
- Measurement SW: DASY52, Version 52.8 (7);SEMCAD X Version 14.6.10 (7164)

Configuration/Ch19100/Area Scan (71x121x1): Interpolated grid: dx=1.500 mm, dy=1.500 mm
Maximum value of SAR (interpolated) = 0.859 W/kg

Configuration/Ch19100/Zoom Scan (5x5x7)/Cube 0: Measurement grid: dx=8mm, dy=8mm, dz=5mm
Reference Value = 25.042 V/m; Power Drift = -0.11 dB
Peak SAR (extrapolated) = 1.01 W/kg
SAR(1 g) = 0.557 W/kg; SAR(10 g) = 0.316 W/kg
Maximum value of SAR (measured) = 0.752 W/kg

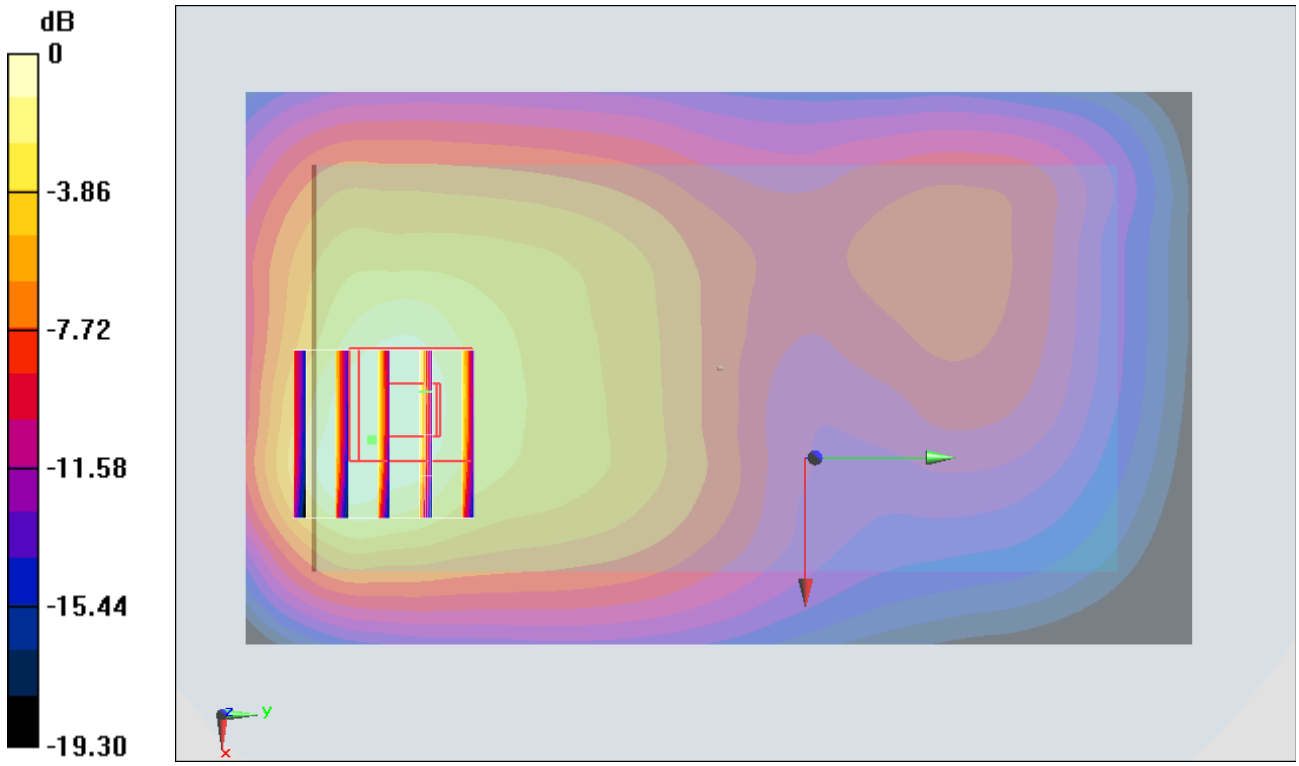

0 dB = 0.752 W/kg = -1.24 dBW/kg

#35_LTE Band 7_20M_QPSK_1RB_0offset_Back_1cm_Ch21350

Communication System: LTE; Frequency: 2560 MHz;Duty Cycle: 1:1
Medium: MSL_2600_150225 Medium parameters used: f = 2560 MHz; σ = 2.149 S/m; ε_r = 52.782; ρ = 1000 kg/m^3
Ambient Temperature：23.3 ℃； Liquid Temperature：22.3 ℃

DASY5 Configuration:
- Probe: EX3DV4 - SN3955; ConvF(7.09, 7.09, 7.09); Calibrated: 2014/11/21;
- Sensor-Surface: 1.4mm (Mechanical Surface Detection)
- Electronics: DAE4 Sn1399; Calibrated: 2014/11/13
- Phantom: SAM-Left; Type: QD 000 P40 C; Serial: TP-1478
- Measurement SW: DASY52, Version 52.8 (8);SEMCAD X Version 14.6.10 (7331)

Configuration/Ch21350/Area Scan (81x151x1): Interpolated grid: dx=1.200 mm, dy=1.200 mm
Maximum value of SAR (interpolated) = 0.808 W/kg

Configuration/Ch21350/Zoom Scan (7x7x7)/Cube 0: Measurement grid: dx=5mm, dy=5mm, dz=5mm
Reference Value = 22.46 V/m; Power Drift = -0.12 dB
Peak SAR (extrapolated) = 1.18 W/kg
SAR(1 g) = 0.563 W/kg; SAR(10 g) = 0.243 W/kg
Maximum value of SAR (measured) = 0.925 W/kg

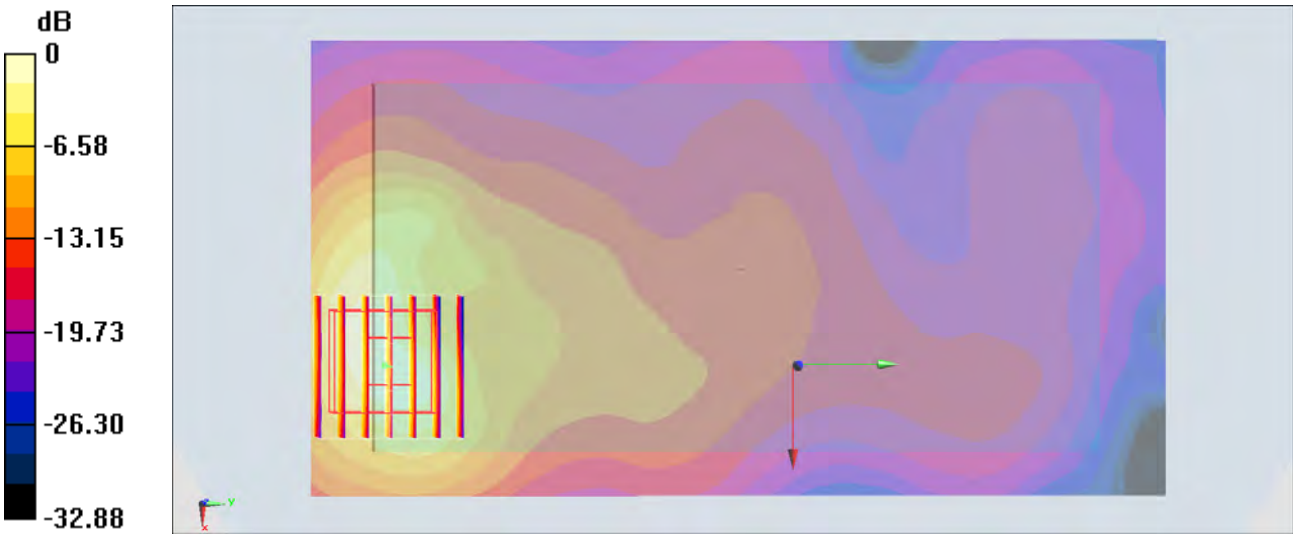

0 dB = 0.925 W/kg = -0.34 dBW/kg

#36_WLAN2.4GHz_802.11b 1Mbps_Back_1cm_Ch11

Communication System: 802.11b ; Frequency: 2462 MHz;Duty Cycle: 1:1.012
Medium: MSL_2450_150226 Medium parameters used: f = 2462 MHz; σ = 2.018 S/m; ε_r = 51.189; ρ = 1000 kg/m^3
Ambient Temperature：23.3 ℃； Liquid Temperature：22.3 ℃

DASY5 Configuration:
- Probe: EX3DV4 - SN3925; ConvF(7.36, 7.36, 7.36); Calibrated: 2014/5/22;
- Sensor-Surface: 1.4mm (Mechanical Surface Detection)
- Electronics: DAE3 Sn495; Calibrated: 2014/5/19
- Phantom: SAM_Right; Type: QD000P40CC; Serial: TP:1383
- Measurement SW: DASY52, Version 52.8 (7);SEMCAD X Version 14.6.10 (7164)

Configuration/Ch11/Area Scan (81x151x1): Interpolated grid: dx=1.200 mm, dy=1.200 mm
Maximum value of SAR (interpolated) = 0.213 W/kg

Configuration/Ch11/Zoom Scan (7x7x7)/Cube 0: Measurement grid: dx=5mm, dy=5mm, dz=5mm
Reference Value = 10.315 V/m; Power Drift = -0.14 dB
Peak SAR (extrapolated) = 0.267 W/kg
SAR(1 g) = 0.125 W/kg; SAR(10 g) = 0.055 W/kg
Maximum value of SAR (measured) = 0.203 W/kg

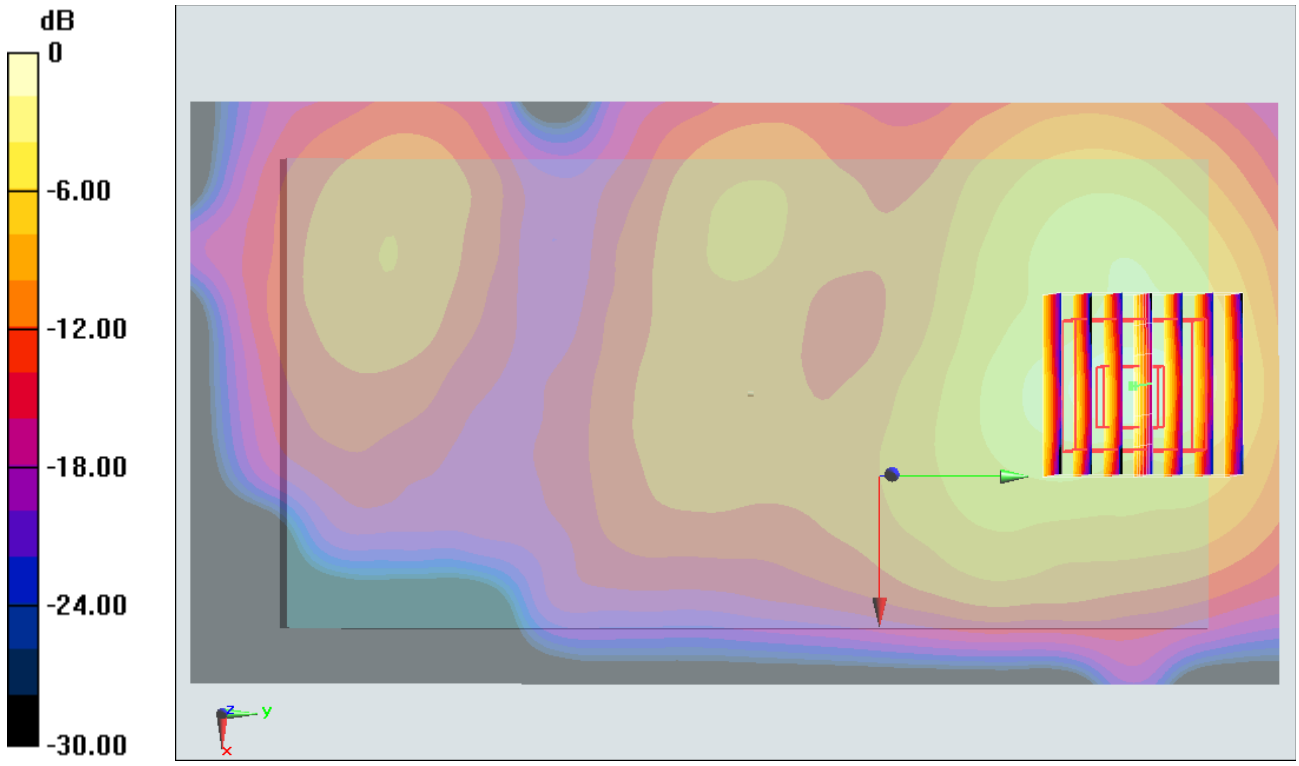

0 dB = 0.203 W/kg = -6.93 dBW/kg

#37_WLAN5GHz_802.11a 6Mbps_Back_1cm_Ch44

Communication System: 802.11a; Frequency: 5220 MHz;Duty Cycle: 1:1.077
Medium: MSL_5G_150224 Medium parameters used: f = 5220 MHz; σ = 5.257 S/m; ε_r = 47.44; ρ = 1000 kg/m^3
Ambient Temperature：23.5 ℃； Liquid Temperature：22.5 ℃

DASY5 Configuration:
- Probe: EX3DV4 - SN3925; ConvF(4.53, 4.53, 4.53); Calibrated: 2014/5/22;
- Sensor-Surface: 1.4mm (Mechanical Surface Detection)
- Electronics: DAE3 Sn495; Calibrated: 2014/5/19
- Phantom: SAM_Right; Type: QD000P40CC; Serial: TP:1383
- Measurement SW: DASY52, Version 52.8 (7);SEMCAD X Version 14.6.10 (7164)

Configuration/Ch44/Area Scan (91x181x1): Interpolated grid: dx=1.000 mm, dy=1.000 mm
Maximum value of SAR (interpolated) = 0.414 W/kg

Configuration/Ch44/Zoom Scan (7x7x7)/Cube 0: Measurement grid: dx=4mm, dy=4mm, dz=1.4mm
Reference Value = 9.894 V/m; Power Drift = -0.07 dB
Peak SAR (extrapolated) = 0.674 W/kg
SAR(1 g) = 0.174 W/kg; SAR(10 g) = 0.054 W/kg
Maximum value of SAR (measured) = 0.415 W/kg

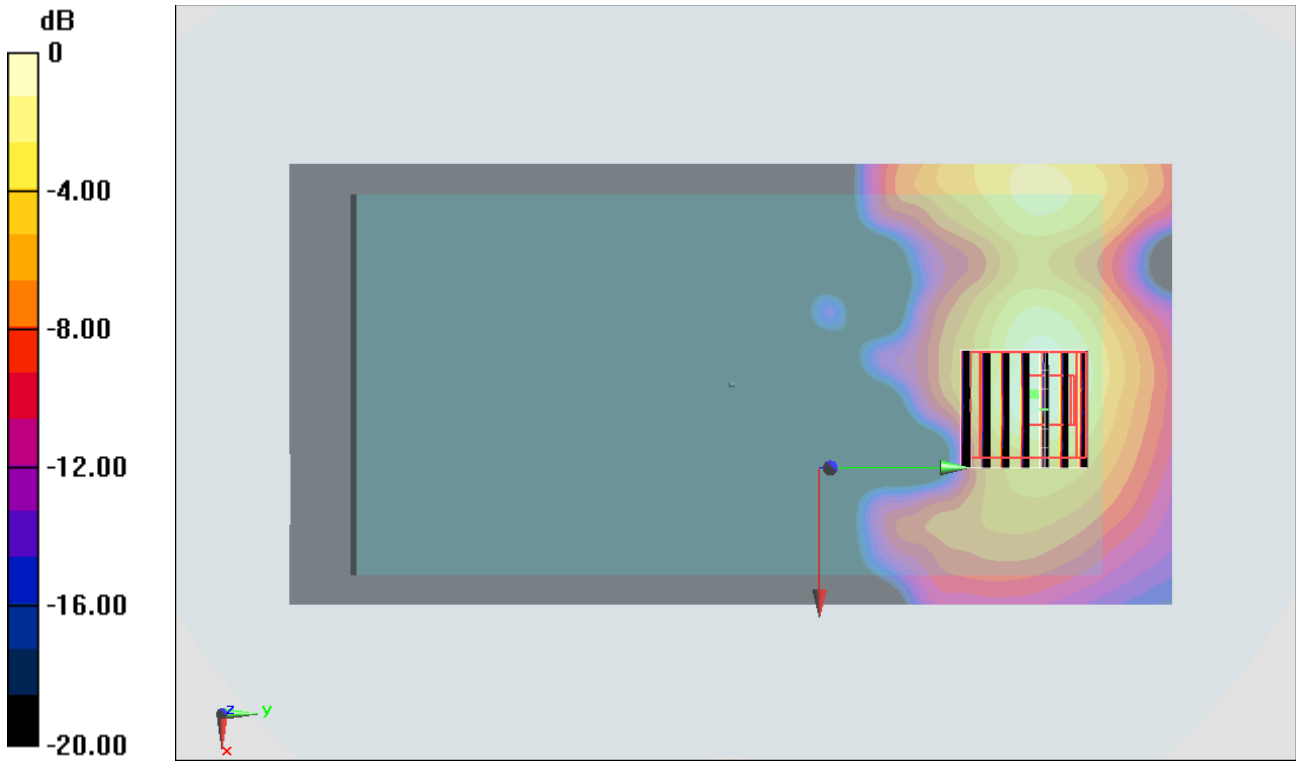

0 dB = 0.415 W/kg = -3.82 dBW/kg

#38_WLAN5GHz_802.11a 6Mbps_Back_1cm_Ch157

Communication System: 802.11a ; Frequency: 5785 MHz;Duty Cycle: 1:1.077
Medium: MSL_5G_150225 Medium parameters used: f = 5785 MHz; σ = 6.113 S/m; ε_r = 46.528; ρ = 1000 kg/m^3
Ambient Temperature：23.5 ℃； Liquid Temperature：22.5 ℃

DASY5 Configuration:
- Probe: EX3DV4 - SN3925; ConvF(4.09, 4.09, 4.09); Calibrated: 2014/5/22;
- Sensor-Surface: 1.4mm (Mechanical Surface Detection)
- Electronics: DAE3 Sn495; Calibrated: 2014/5/19
- Phantom: SAM_Right; Type: QD000P40CC; Serial: TP:1383
- Measurement SW: DASY52, Version 52.8 (7);SEMCAD X Version 14.6.10 (7164)

Configuration/Ch157/Area Scan (91x181x1): Interpolated grid: dx=1.000 mm, dy=1.000 mm
Maximum value of SAR (interpolated) = 0.469 W/kg

Configuration/Ch157/Zoom Scan (7x7x7)/Cube 0: Measurement grid: dx=4mm, dy=4mm, dz=1.4mm
Reference Value = 10.077 V/m; Power Drift = -0.04 dB
Peak SAR (extrapolated) = 0.786 W/kg
SAR(1 g) = 0.178 W/kg; SAR(10 g) = 0.055 W/kg
Maximum value of SAR (measured) = 0.455 W/kg

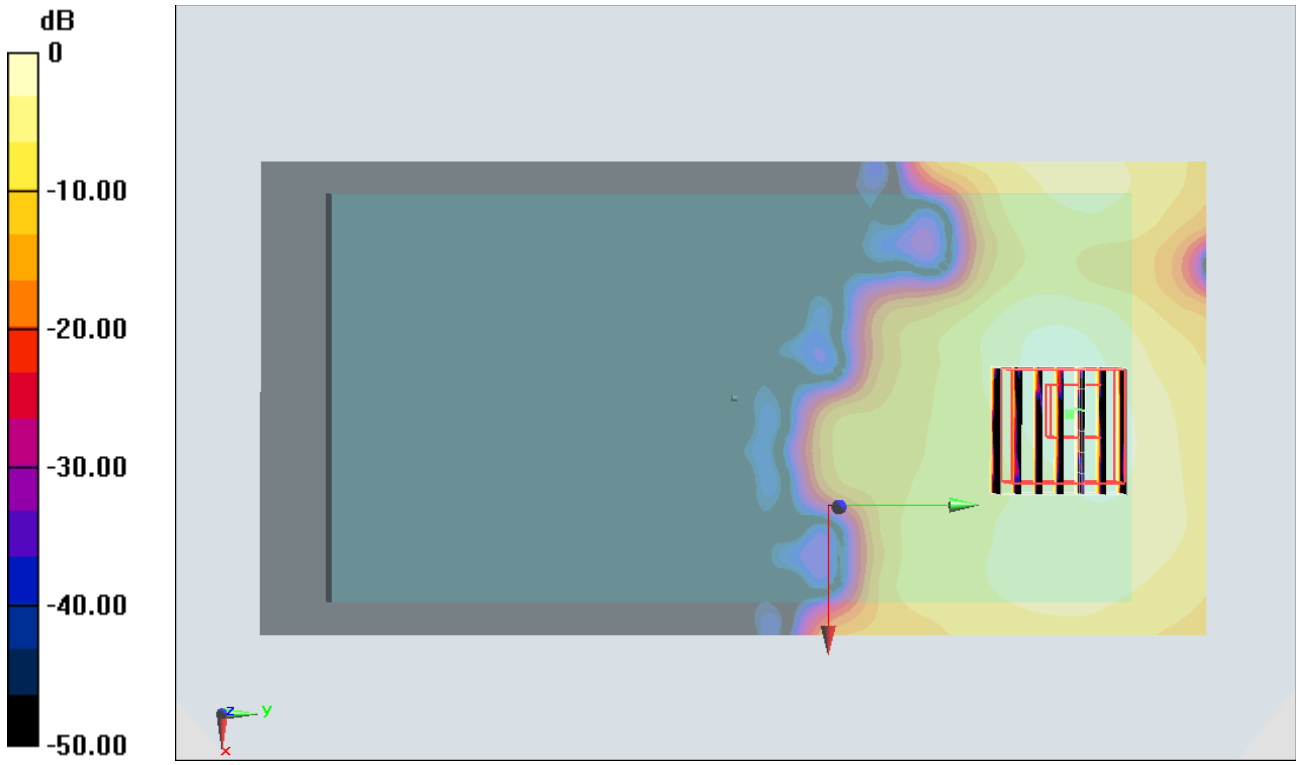

0 dB = 0.455 W/kg = -3.42 dBW/kg