FCC SAR Test Report

Report No.	:	**SA170425C26**
Applicant	:	**ASUSTek COMPUTER INC.**
Address	:	**4F, No. 150, LI-TE Rd., PEITOU, TAIPEI 112, TAIWAN**
Product	:	**ASUS Phone**
FCC	:	**MSQZ01KD**
Brand	:	**ASUS**
Model No.	:	**ASUS_Z01KD**
Standards	:	**FCC 47 CFR Part 2 (2.1093), IEEE C95.1:1992, IEEE Std 1528:2013** **KDB 865664 D01 v01r04, KDB 865664 D02 v01r02** **KDB 248227 D01 v02r02, KDB 447498 D01 v06, KDB 648474 D04 v01r03** **KDB 941225 D01 v03r01, KDB 941225 D05 v02r05, KDB 941225 D06 v02r01**
Sample Received Date	:	**Apr. 25, 2017**
Date of Testing	:	**Jul. 11, 2017 ~ Jul. 19, 2017**
Lab Address	:	**No. 47-2, 14th Ling, Chia Pau Vil., Lin Kou Dist., New Taipei City, Taiwan, R.O.C.**
Test Location	:	**No. 19, Hwa Ya 2nd Rd, Wen Hwa Vil, Kwei Shan Dist., Taoyuan City 33383, Taiwan (R.O.C)**

CERTIFICATION: The above equipment have been tested by **Bureau Veritas Consumer Products Services (H.K.) Ltd., Taoyuan Branch – Lin Kou Laboratories**, and found compliance with the requirement of the above standards. The test record, data evaluation & Equipment Under Test (EUT) configurations represented herein are true and accurate accounts of the measurements of the sample's SAR characteristics under the conditions specified in this report. It should not be reproduced except in full, without the written approval of our laboratory. The client should not use it to claim product certification, approval, or endorsement by TAF or any government agencies.

Prepared By : Ivonne Wu / Supervisor

Approved By : Gordon Lin / Assistant Manager

FCC Accredited No.: TW0003

This report is for your exclusive use. Any copying or replication of this report to or for any other person or entity, or use of our name or trademark, is permitted only with our prior written permission. This report sets forth our findings solely with respect to the test samples identified herein. The results set forth in this report are not indicative or representative of the quality or characteristics of the lot from which a test sample was taken or any similar or identical product unless specifically and expressly noted. Our report includes all of the tests requested by you and the results thereof based upon the information that you provided to us. You have 60 days from date of issuance of this report to notify us of any material error or omission caused by our negligence, provided, however, that such notice shall be in writing and shall specifically address the issue you wish to raise. A failure to raise such issue within the prescribed time shall constitute your unqualified acceptance of the completeness of this report, the tests conducted and the correctness of the report contents. Unless specific mention, the uncertainty of measurement has been explicitly taken into account to declare the compliance or non-compliance to the specification.

Table of Contents

Release Control Record **3**
1. Summary of Maximum SAR Value **4**
2. Description of Equipment Under Test **5**
3. SAR Measurement System **6**
3.1 Definition of Specific Absorption Rate (SAR) 6
3.2 SPEAG DASY52 System 6
3.2.1 Robot 7
3.2.2 Probes 8
3.2.3 Data Acquisition Electronics (DAE) 8
3.2.4 Phantoms 9
3.2.5 Device Holder 10
3.2.6 System Validation Dipoles 10
3.2.7 Tissue Simulating Liquids 11
3.3 SAR System Verification 14
3.4 SAR Measurement Procedure 15
3.4.1 Area & Zoom Scan Procedure 15
3.4.2 Volume Scan Procedure 15
3.4.3 Power Drift Monitoring 16
3.4.4 Spatial Peak SAR Evaluation 16
3.4.5 SAR Averaged Methods 16
4. SAR Measurement Evaluation **17**
4.1 EUT Configuration and Setting 17
4.2 EUT Testing Position 23
4.2.1 Head Exposure Conditions 23
4.2.2 Body-worn Accessory Exposure Conditions 25
4.2.3 Hotspot Mode Exposure Conditions 26
4.3 Tissue Verification 27
4.4 System Validation 28
4.5 System Verification 29
4.6 Maximum Output Power 30
4.6.1 Maximum Target Conducted Power 30
4.6.2 Measured Conducted Power Result 31
4.7 SAR Testing Results 40
4.7.1 SAR Test Reduction Considerations 40
4.7.2 SAR Results for Head Exposure Condition 46
4.7.3 SAR Results for Body-worn Exposure Condition (Test Separation Distance is 10 mm) 48
4.7.4 SAR Results for Hotspot Exposure Condition (Test Separation Distance is 10 mm) 49
4.7.5 SAR Measurement Variability 51
4.7.6 Simultaneous Multi-band Transmission Evaluation 52
5. Calibration of Test Equipment **64**
6. Measurement Uncertainty **65**
7. Information on the Testing Laboratories **69**

Appendix A. SAR Plots of System Verification
Appendix B. SAR Plots of SAR Measurement
Appendix C. Calibration Certificate for Probe and Dipole
Appendix D. Photographs of EUT and Setup

Release Control Record

Report No.	Reason for Change	Date Issued
SA170425C26	Initial release	Jul. 25, 2017

1. Summary of Maximum SAR Value

Equipment Class	Mode	Highest SAR-1g Head (W/kg)	Highest SAR-1g Body-worn Tested at 10 mm (W/kg)	Highest SAR-1g Hotspot Tested at 10 mm (W/kg)
PCE	GSM850	0.15	0.79	0.79
	GSM1900	0.02	0.55	0.65
	WCDMA II	0.03	0.63	0.75
	WCDMA IV	0.05	0.49	0.54
	WCDMA V	0.18	0.49	0.49
	LTE 2	0.02	0.59	0.99
	LTE 4	0.05	0.66	0.73
	LTE 5	0.18	0.50	0.50
	LTE 7	0.08	0.63	1.19
	LTE 12	0.07	0.22	0.22
	LTE 17	0.08	0.25	0.25
DTS	2.4G WLAN	1.16	0.38	0.38
NII	5.2G WLAN	N/A	N/A	0.33
	5.3G WLAN	1.18	0.46	N/A
	5.6G WLAN	1.02	0.59	N/A
	5.8G WLAN	1.07	0.36	0.36
DSS	Bluetooth	N/A	0.03	N/A
DXX	NFC	N/A	N/A	N/A
Highest Simultaneous Transmission SAR		Head	Body-worn	Hotspot
		1.36	1.38	1.19

Note:

1. The SAR criteria **(Head & Body: SAR-1g 1.6 W/kg, and Extremity: SAR-10g 4.0 W/kg)** for general population / uncontrolled exposure is specified in FCC 47 CFR part 2 (2.1093) and ANSI/IEEE C95.1-1992.

2. Description of Equipment Under Test

EUT Type	ASUS Phone
FCC ID	MSQZ01KD
Brand Name	ASUS
Model Name	ASUS_Z01KD
SKU	BR/NA/SA-2CA US/BR/CO/PE/CL
Tx Frequency Bands (Unit: MHz)	GSM850 : 824.2 ~ 848.8 GSM1900 : 1850.2 ~ 1909.8 WCDMA Band II : 1852.4 ~ 1907.6 WCDMA Band IV : 1712.4 ~ 1752.6 WCDMA Band V : 826.4 ~ 846.6 LTE Band 2 : 1850.7 ~ 1909.3 (BW: 1.4M, 3M, 5M, 10M, 15M, 20M) LTE Band 4 : 1710.7 ~ 1754.3 (BW: 1.4M, 3M, 5M, 10M, 15M, 20M) LTE Band 5 : 824.7 ~ 848.3 (BW: 1.4M, 3M, 5M, 10M) LTE Band 7 : 2502.5 ~ 2567.5 (BW: 5M, 10M, 15M, 20M) LTE Band 12 : 699.7 ~ 715.3 (BW: 1.4M, 3M, 5M, 10M) LTE Band 17 : 706.5 ~ 713.5 (BW: 5M, 10M) WLAN : 2412 ~ 2462, 5180 ~ 5240, 5260 ~ 5320, 5500 ~ 5700, 5745 ~ 5825 Bluetooth : 2402 ~ 2480 NFC : 13.56
Uplink Modulations	GSM & GPRS : GMSK EDGE : 8PSK WCDMA : QPSK LTE : QPSK, 16QAM 802.11b : DSSS 802.11a/g/n/ac : OFDM Bluetooth : GFSK, π/4-DQPSK, 8-DPSK NFC : ASK
Maximum Tune-up Conducted Power (Unit: dBm)	Please refer to section 4.6.1 of this report.
Antenna Type	WWAN: Fixed Internal Antenna WLAN/BT: PIFA Antenna
EUT Stage	Production Unit

Note:

1. The above EUT information is declared by manufacturer and for more detailed features description please refers to the manufacturer's specifications or User's Manual.

3. SAR Measurement System

3.1 Definition of Specific Absorption Rate (SAR)

SAR is related to the rate at which energy is absorbed per unit mass in an object exposed to a radio field. The SAR distribution in a biological body is complicated and is usually carried out by experimental techniques or numerical modeling. The standard recommends limits for two tiers of groups, occupational/controlled and general population/uncontrolled, based on a person's awareness and ability to exercise control over his or her exposure. In general, occupational/controlled exposure limits are higher than the limits for general population/uncontrolled.

The SAR definition is the time derivative (rate) of the incremental energy (dW) absorbed by (dissipated in) an incremental mass (dm) contained in a volume element (dv) of a given density (ρ). The equation description is as below:

$$\mathbf{SAR} = \frac{\mathbf{d}}{\mathbf{dt}}\left(\frac{\mathbf{dW}}{\mathbf{dm}}\right) = \frac{\mathbf{d}}{\mathbf{dt}}\left(\frac{\mathbf{dW}}{\boldsymbol{\rho}\mathbf{dv}}\right)$$

SAR is expressed in units of Watts per kilogram (W/kg)

SAR measurement can be related to the electrical field in the tissue by

$$\mathbf{SAR} = \frac{\boldsymbol{\sigma}|\mathbf{E}|^2}{\boldsymbol{\rho}}$$

Where: σ is the conductivity of the tissue, ρ is the mass density of the tissue and E is the RMS electrical field strength.

3.2 SPEAG DASY52 System

DASY52 system consists of high precision robot, probe alignment sensor, phantom, robot controller, controlled measurement server and near-field probe. The robot includes six axes that can move to the precision position of the DASY52 software defined. The DASY52 software can define the area that is detected by the probe. The robot is connected to controlled box. Controlled measurement server is connected to the controlled robot box. The DAE includes amplifier, signal multiplexing, AD converter, offset measurement and surface detection. It is connected to the Electro-optical coupler (ECO). The ECO performs the conversion form the optical into digital electric signal of the DAE and transfers data to the PC.

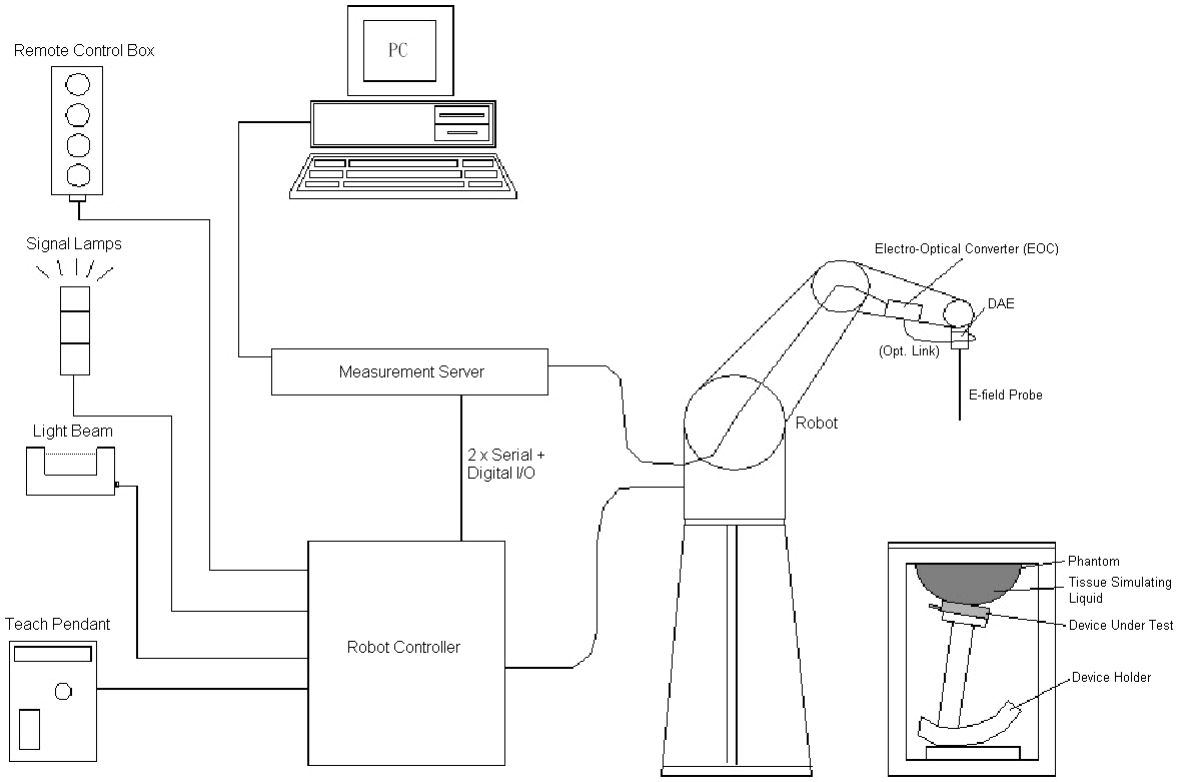

Fig-3.1 SPEAG DASY52 System Setup

3.2.1 Robot

The DASY52 systems use the high precision robots from Stäubli SA (France). For the 6-axis controller system, the robot controller version of CS8c from Stäubli is used. The Stäubli robot series have many features that are important for our application:

- High precision (repeatability ±0.035 mm)
- High reliability (industrial design)
- Jerk-free straight movements
- Low ELF interference (the closed metallic construction shields against motor control fields)

Fig-3.2 SPEAG DASY52 System

3.2.2 Probes

The SAR measurement is conducted with the dosimetric probe. The probe is specially designed and calibrated for use in liquid with high permittivity. The dosimetric probe has special calibration in liquid at different frequency.

Model	EX3DV4	
Construction	Symmetrical design with triangular core. Built-in shielding against static charges. PEEK enclosure material (resistant to organic solvents, e.g., DGBE).	
Frequency	10 MHz to 6 GHz Linearity: ± 0.2 dB	
Directivity	± 0.3 dB in HSL (rotation around probe axis) ± 0.5 dB in tissue material (rotation normal to probe axis)	
Dynamic Range	10 µW/g to 100 mW/g Linearity: ± 0.2 dB (noise: typically < 1 µW/g)	
Dimensions	Overall length: 337 mm (Tip: 20 mm) Tip diameter: 2.5 mm (Body: 12 mm) Typical distance from probe tip to dipole centers: 1 mm	

Model	ES3DV3	
Construction	Symmetrical design with triangular core. Interleaved sensors. Built-in shielding against static charges. PEEK enclosure material (resistant to organic solvents, e.g., DGBE).	
Frequency	10 MHz to 4 GHz Linearity: ± 0.2 dB	
Directivity	± 0.2 dB in HSL (rotation around probe axis) ± 0.3 dB in tissue material (rotation normal to probe axis)	
Dynamic Range	5 µW/g to 100 mW/g Linearity: ± 0.2 dB	
Dimensions	Overall length: 337 mm (Tip: 20 mm) Tip diameter: 3.9 mm (Body: 12 mm) Distance from probe tip to dipole centers: 2.0 mm	

Model	ET3DV6	
Construction	Symmetrical design with triangular core Built-in optical fiber for surface detection system. Built-in shielding against static charges. PEEK enclosure material (resistant to organic solvents, e.g., DGBE)	
Frequency	10 MHz to 2.3 GHz; Linearity: ± 0.2 dB	
Directivity	± 0.2 dB in TSL (rotation around probe axis) ± 0.4 dB in TSL (rotation normal to probe axis)	
Dynamic Range	5 µW/g to 100 mW/g; Linearity: ± 0.2 dB	
Dimensions	Overall length: 337 mm (Tip: 16 mm) Tip diameter: 6.8 mm (Body: 12 mm) Distance from probe tip to dipole centers: 2.7 mm	

3.2.3 Data Acquisition Electronics (DAE)

Model	DAE3, DAE4	
Construction	Signal amplifier, multiplexer, A/D converter and control logic. Serial optical link for communication with DASY embedded system (fully remote controlled). Two step probe touch detector for mechanical surface detection and emergency robot stop.	
Measurement Range	-100 to +300 mV (16 bit resolution and two range settings: 4mV, 400mV)	
Input Offset Voltage	< 5µV (with auto zero)	
Input Bias Current	< 50 fA	
Dimensions	60 x 60 x 68 mm	

3.2.4 Phantoms

Model	Twin SAM	
Construction	The shell corresponds to the specifications of the Specific Anthropomorphic Mannequin (SAM) phantom defined in IEEE 1528 and IEC 62209-1. It enables the dosimetric evaluation of left and right hand phone usage as well as body mounted usage at the flat phantom region. A cover prevents evaporation of the liquid. Reference markings on the phantom allow the complete setup of all predefined phantom positions and measurement grids by teaching three points with the robot.	
Material	Vinylester, glass fiber reinforced (VE-GF)	
Shell Thickness	2 ± 0.2 mm (6 ± 0.2 mm at ear point)	
Dimensions	Length: 1000 mm Width: 500 mm Height: adjustable feet	
Filling Volume	approx. 25 liters	

Model	ELI	
Construction	Phantom for compliance testing of handheld and body-mounted wireless devices in the frequency range of 30 MHz to 6 GHz. ELI is fully compatible with the IEC 62209-2 standard and all known tissue simulating liquids. ELI has been optimized regarding its performance and can be integrated into our standard phantom tables. A cover prevents evaporation of the liquid. Reference markings on the phantom allow installation of the complete setup, including all predefined phantom positions and measurement grids, by teaching three points. The phantom is compatible with all SPEAG dosimetric probes and dipoles.	
Material	Vinylester, glass fiber reinforced (VE-GF)	
Shell Thickness	2.0 ± 0.2 mm (bottom plate)	
Dimensions	Major axis: 600 mm Minor axis: 400 mm	
Filling Volume	approx. 30 liters	

3.2.5 Device Holder

Model	Mounting Device	
Construction	In combination with the Twin SAM Phantom or ELI4, the Mounting Device enables the rotation of the mounted transmitter device in spherical coordinates. Rotation point is the ear opening point. Transmitter devices can be easily and accurately positioned according to IEC, IEEE, FCC or other specifications. The device holder can be locked for positioning at different phantom sections (left head, right head, flat).	
Material	POM	

Model	Laptop Extensions Kit	
Construction	Simple but effective and easy-to-use extension for Mounting Device that facilitates the testing of larger devices according to IEC 62209-2 (e.g., laptops, cameras, etc.). It is lightweight and fits easily on the upper part of the Mounting Device in place of the phone positioner.	
Material	POM, Acrylic glass, Foam	

3.2.6 System Validation Dipoles

Model	D-Serial	
Construction	Symmetrical dipole with l/4 balun. Enables measurement of feed point impedance with NWA. Matched for use near flat phantoms filled with tissue simulating solutions.	
Frequency	750 MHz to 5800 MHz	
Return Loss	> 20 dB	
Power Capability	> 100 W (f < 1GHz), > 40 W (f > 1GHz)	

3.2.7 Tissue Simulating Liquids

For SAR measurement of the field distribution inside the phantom, the phantom must be filled with homogeneous tissue simulating liquid to a depth of at least 15 cm. For head SAR testing, the liquid height from the ear reference point (ERP) of the phantom to the liquid top surface is larger than 15 cm. For body SAR testing, the liquid height from the center of the flat phantom to the liquid top surface is larger than 15 cm. The nominal dielectric values of the tissue simulating liquids in the phantom and the tolerance of 5% are listed in Table-3.1.

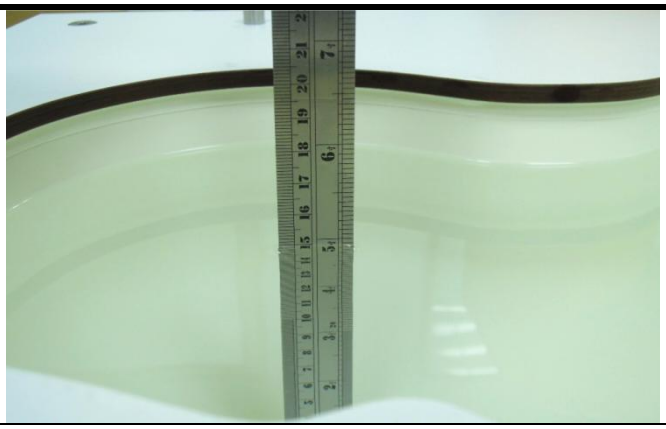	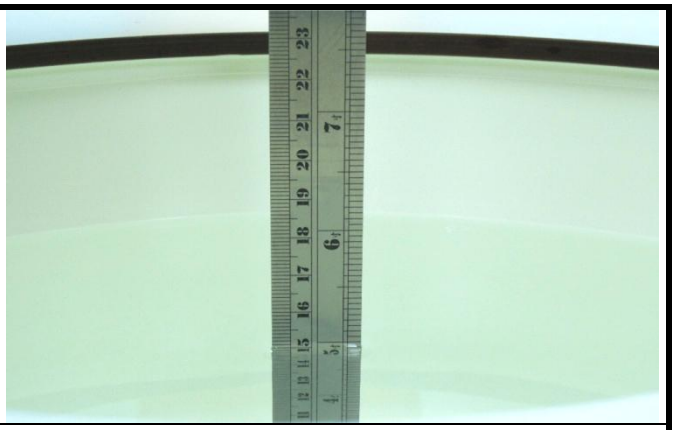
Photo of Liquid Height for Head Position	**Photo of Liquid Height for Body Position**

The dielectric properties of the head tissue simulating liquids are defined in IEEE 1528, and KDB 865664 D01 Appendix A. For the body tissue simulating liquids, the dielectric properties are defined in KDB 865664 D01 Appendix A. The dielectric properties of the tissue simulating liquids were verified prior to the SAR evaluation using a dielectric assessment kit and a network analyzer.

Table-3.1 Targets of Tissue Simulating Liquid

Frequency (MHz)	Target Permittivity	Range of ±5%	Target Conductivity	Range of ±5%
For Head				
750	41.9	39.8 ~ 44.0	0.89	0.85 ~ 0.93
835	41.5	39.4 ~ 43.6	0.90	0.86 ~ 0.95
900	41.5	39.4 ~ 43.6	0.97	0.92 ~ 1.02
1450	40.5	38.5 ~ 42.5	1.20	1.14 ~ 1.26
1640	40.3	38.3 ~ 42.3	1.29	1.23 ~ 1.35
1750	40.1	38.1 ~ 42.1	1.37	1.30 ~ 1.44
1800	40.0	38.0 ~ 42.0	1.40	1.33 ~ 1.47
1900	40.0	38.0 ~ 42.0	1.40	1.33 ~ 1.47
2000	40.0	38.0 ~ 42.0	1.40	1.33 ~ 1.47
2300	39.5	37.5 ~ 41.5	1.67	1.59 ~ 1.75
2450	39.2	37.2 ~ 41.2	1.80	1.71 ~ 1.89
2600	39.0	37.1 ~ 41.0	1.96	1.86 ~ 2.06
3500	37.9	36.0 ~ 39.8	2.91	2.76 ~ 3.06
5200	36.0	34.2 ~ 37.8	4.66	4.43 ~ 4.89
5300	35.9	34.1 ~ 37.7	4.76	4.52 ~ 5.00
5500	35.6	33.8 ~ 37.4	4.96	4.71 ~ 5.21
5600	35.5	33.7 ~ 37.3	5.07	4.82 ~ 5.32
5800	35.3	33.5 ~ 37.1	5.27	5.01 ~ 5.53
For Body				
750	55.5	52.7 ~ 58.3	0.96	0.91 ~ 1.01
835	55.2	52.4 ~ 58.0	0.97	0.92 ~ 1.02
900	55.0	52.3 ~ 57.8	1.05	1.00 ~ 1.10
1450	54.0	51.3 ~ 56.7	1.30	1.24 ~ 1.37
1640	53.8	51.1 ~ 56.5	1.40	1.33 ~ 1.47
1750	53.4	50.7 ~ 56.1	1.49	1.42 ~ 1.56
1800	53.3	50.6 ~ 56.0	1.52	1.44 ~ 1.60
1900	53.3	50.6 ~ 56.0	1.52	1.44 ~ 1.60
2000	53.3	50.6 ~ 56.0	1.52	1.44 ~ 1.60
2300	52.9	50.3 ~ 55.5	1.81	1.72 ~ 1.90
2450	52.7	50.1 ~ 55.3	1.95	1.85 ~ 2.05
2600	52.5	49.9 ~ 55.1	2.16	2.05 ~ 2.27
3500	51.3	48.7 ~ 53.9	3.31	3.14 ~ 3.48
5200	49.0	46.6 ~ 51.5	5.30	5.04 ~ 5.57
5300	48.9	46.5 ~ 51.3	5.42	5.15 ~ 5.69
5500	48.6	46.2 ~ 51.0	5.65	5.37 ~ 5.93
5600	48.5	46.1 ~ 50.9	5.77	5.48 ~ 6.06
5800	48.2	45.8 ~ 50.6	6.00	5.70 ~ 6.30

The following table gives the recipes for tissue simulating liquids.

Table-3.2 Recipes of Tissue Simulating Liquid

Tissue Type	Bactericide	DGBE	HEC	NaCl	Sucrose	Triton X-100	Water	Diethylene Glycol Mono-hexylether
H750	0.2	-	0.2	1.5	56.0	-	42.1	-
H835	0.2	-	0.2	1.5	57.0	-	41.1	-
H900	0.2	-	0.2	1.4	58.0	-	40.2	-
H1450	-	43.3	-	0.6	-	-	56.1	-
H1640	-	45.8	-	0.5	-	-	53.7	-
H1750	-	47.0	-	0.4	-	-	52.6	-
H1800	-	44.5	-	0.3	-	-	55.2	-
H1900	-	44.5	-	0.2	-	-	55.3	-
H2000	-	44.5	-	0.1	-	-	55.4	-
H2300	-	44.9	-	0.1	-	-	55.0	-
H2450	-	45.0	-	0.1	-	-	54.9	-
H2600	-	45.1	-	0.1	-	-	54.8	-
H3500	-	8.0	-	0.2	-	20.0	71.8	-
H5G	-	-	-	-	-	17.2	65.5	17.3
B750	0.2	-	0.2	0.8	48.8	-	50.0	-
B835	0.2	-	0.2	0.9	48.5	-	50.2	-
B900	0.2	-	0.2	0.9	48.2	-	50.5	-
B1450	-	34.0	-	0.3	-	-	65.7	-
B1640	-	32.5	-	0.3	-	-	67.2	-
B1750	-	31.0	-	0.2	-	-	68.8	-
B1800	-	29.5	-	0.4	-	-	70.1	-
B1900	-	29.5	-	0.3	-	-	70.2	-
B2000	-	30.0	-	0.2	-	-	69.8	-
B2300	-	31.0	-	0.1	-	-	68.9	-
B2450	-	31.4	-	0.1	-	-	68.5	-
B2600	-	31.8	-	0.1	-	-	68.1	-
B3500	-	28.8	-	0.1	-	-	71.1	-
B5G	-	-	-	-	-	10.7	78.6	10.7

3.3 SAR System Verification

The system check verifies that the system operates within its specifications. It is performed daily or before every SAR measurement. The system check uses normal SAR measurements in the flat section of the phantom with a matched dipole at a specified distance. The system verification setup is shown as below.

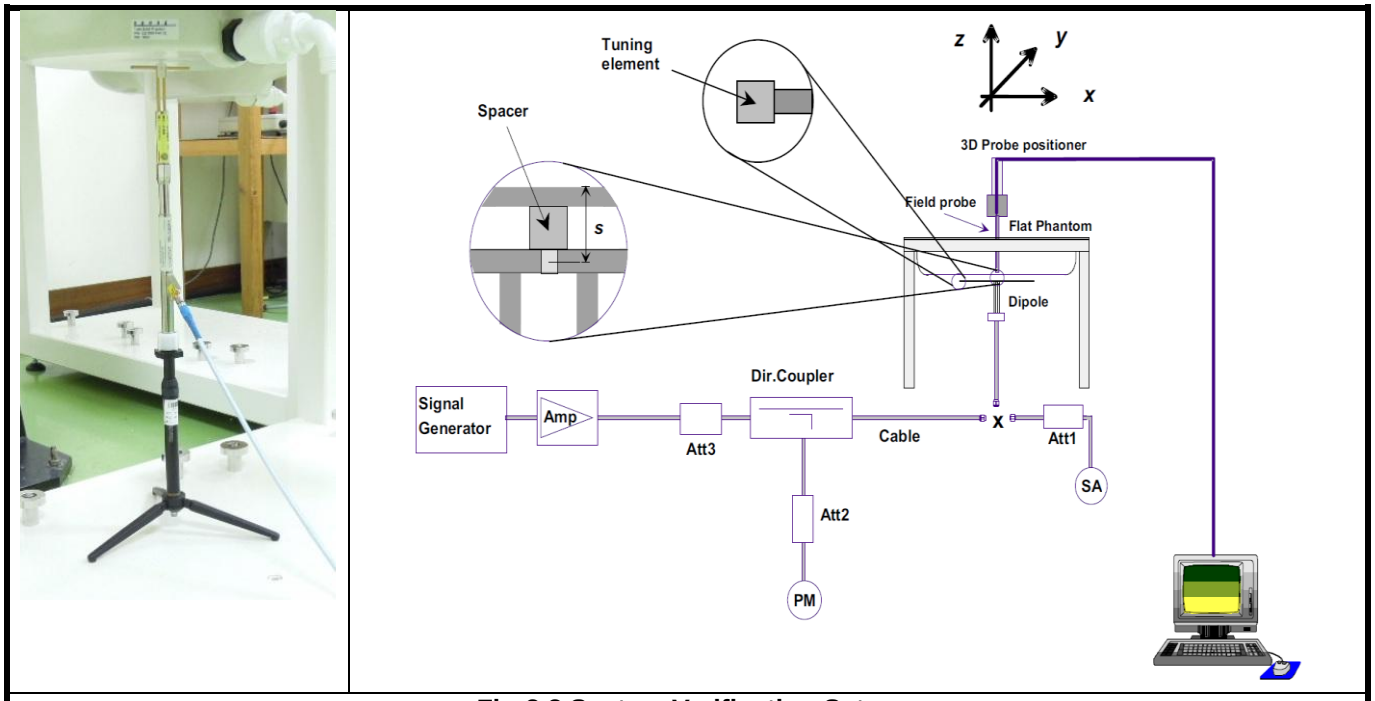

Fig-3.3 System Verification Setup

The validation dipole is placed beneath the flat phantom with the specific spacer in place. The distance spacer is touch the phantom surface with a light pressure at the reference marking and be oriented parallel to the long side of the phantom. The spectrum analyzer measures the forward power at the location of the system check dipole connector. The signal generator is adjusted for the desired forward power (250 mW is used for 700 MHz to 3 GHz, 100 mW is used for 3.5 GHz to 6 GHz) at the dipole connector and the power meter is read at that level. After connecting the cable to the dipole, the signal generator is readjusted for the same reading at power meter.

After system check testing, the SAR result will be normalized to 1W forward input power and compared with the reference SAR value derived from validation dipole certificate report. The deviation of system check should be within 10 %.

3.4 SAR Measurement Procedure

According to the SAR test standard, the recommended procedure for assessing the peak spatial-average SAR value consists of the following steps:

(a) Power reference measurement
(b) Area scan
(c) Zoom scan
(d) Power drift measurement

The SAR measurement procedures for each of test conditions are as follows:

(a) Make EUT to transmit maximum output power
(b) Measure conducted output power through RF cable
(c) Place the EUT in the specific position of phantom
(d) Perform SAR testing steps on the DASY system
(e) Record the SAR value

3.4.1 Area & Zoom Scan Procedure

First Area Scan is used to locate the approximate location(s) of the local peak SAR value(s). The measurement grid within an Area Scan is defined by the grid extent, grid step size and grid offset. Next, in order to determine the EM field distribution in a three-dimensional spatial extension, Zoom Scan is required. The Zoom Scan is performed around the highest E-field value to determine the averaged SAR-distribution over 10 g. According to KDB 865664 D01, the resolution for Area and Zoom scan is specified in the table below.

Items	<= 2 GHz	2-3 GHz	3-4 GHz	4-5 GHz	5-6 GHz
Area Scan (Δx, Δy)	<= 15 mm	<= 12 mm	<= 12 mm	<= 10 mm	<= 10 mm
Zoom Scan (Δx, Δy)	<= 8 mm	<= 5 mm	<= 5 mm	<= 4 mm	<= 4 mm
Zoom Scan (Δz)	<= 5 mm	<= 5 mm	<= 4 mm	<= 3 mm	<= 2 mm
Zoom Scan Volume	>= 30 mm	>= 30 mm	>= 28 mm	>= 25 mm	>= 22 mm

Note:

When zoom scan is required and report SAR is <= 1.4 W/kg, the zoom scan resolution of Δx / Δy (2-3GHz: <= 8 mm, 3-4GHz: <= 7 mm, 4-6GHz: <= 5 mm) may be applied.

3.4.2 Volume Scan Procedure

The volume scan is used for assess overlapping SAR distributions for antennas transmitting in different frequency bands. It is equivalent to an oversized zoom scan used in standalone measurements. The measurement volume will be used to enclose all the simultaneous transmitting antennas. For antennas transmitting simultaneously in different frequency bands, the volume scan is measured separately in each frequency band. In order to sum correctly to compute the 1g aggregate SAR, the EUT remain in the same test position for all measurements and all volume scan use the same spatial resolution and grid spacing. When all volume scan were completed, the software, SEMCAD postprocessor can combine and subsequently superpose these measurement data to calculating the multiband SAR.

3.4.3 Power Drift Monitoring

All SAR testing is under the EUT install full charged battery and transmit maximum output power. In DASY measurement software, the power reference measurement and power drift measurement procedures are used for monitoring the power drift of EUT during SAR test. Both these procedures measure the field at a specified reference position before and after the SAR testing. The software will calculate the field difference in dB. If the power drift more than 5%, the SAR will be retested.

3.4.4 Spatial Peak SAR Evaluation

The procedure for spatial peak SAR evaluation has been implemented according to the test standard. It can be conducted for 1g and 10g, as well as for user-specific masses. The DASY software includes all numerical procedures necessary to evaluate the spatial peak SAR value.

The base for the evaluation is a "cube" measurement. The measured volume must include the 1g and 10g cubes with the highest averaged SAR values. For that purpose, the center of the measured volume is aligned to the interpolated peak SAR value of a previously performed area scan.

The entire evaluation of the spatial peak values is performed within the post-processing engine (SEMCAD). The system always gives the maximum values for the 1g and 10g cubes. The algorithm to find the cube with highest averaged SAR is divided into the following stages:

(a) Extraction of the measured data (grid and values) from the Zoom Scan
(b) Calculation of the SAR value at every measurement point based on all stored data (A/D values and measurement parameters)
(c) Generation of a high-resolution mesh within the measured volume
(d) Interpolation of all measured values form the measurement grid to the high-resolution grid
(e) Extrapolation of the entire 3-D field distribution to the phantom surface over the distance from sensor to surface
(f) Calculation of the averaged SAR within masses of 1g and 10g

3.4.5 SAR Averaged Methods

In DASY, the interpolation and extrapolation are both based on the modified Quadratic Shepard’s method. The interpolation scheme combines a least-square fitted function method and a weighted average method which are the two basic types of computational interpolation and approximation.

Extrapolation routines are used to obtain SAR values between the lowest measurement points and the inner phantom surface. The extrapolation distance is determined by the surface detection distance and the probe sensor offset. The uncertainty increases with the extrapolation distance. To keep the uncertainty within 1% for the 1 g and 10 g cubes, the extrapolation distance should not be larger than 5 mm.

4. SAR Measurement Evaluation

4.1 EUT Configuration and Setting

<Connections between EUT and System Simulator>

For WWAN SAR testing, the EUT was linked and controlled by base station emulator. Communication between the EUT and the emulator was established by air link. The distance between the EUT and the communicating antenna of the emulator is larger than 50 cm and the output power radiated from the emulator antenna is at least 30 dB smaller than the output power of EUT. The EUT was set from the emulator to radiate maximum output power during SAR testing.

<Considerations Related to GSM / GPRS / EDGE for Setup and Testing>

The maximum multi-slot capability supported by this device is as below.

1. This EUT is class B device
2. This EUT supports GPRS multi-slot class 10 (max. uplink: 2, max. downlink: 4, total timeslots: 5)
3. This EUT supports EDGE multi-slot class 10 (max. uplink: 2, max. downlink: 4, total timeslots: 5)

For GSM850 frequency band, the power control level is set to 5 for GSM mode and GPRS (GMSK: CS1), and set to 8 for EDGE (GMSK: MCS1, 8PSK: MCS9). For GSM1900 frequency band, the power control level is set to 0 for GSM mode and GPRS (GMSK: CS1), and set to 2 for EDGE (GMSK: MCS1, 8PSK: MCS9).

SAR test reduction for GPRS and EDGE modes is determined by the source-based time-averaged output power specified for production units, including tune-up tolerance. The data mode with highest specified time-averaged output power should be tested for SAR compliance in the applicable exposure conditions. For modes with the same specified maximum output power and tolerance, the higher number time-slot configuration should be tested.

<Considerations Related to WCDMA for Setup and Testing>

WCDMA Handsets Head SAR

SAR for next to the ear head exposure is measured using a 12.2 kbps RMC with TPC bits configured to all “1’s”. The 3G SAR test reduction procedure is applied to AMR configurations with 12.2 kbps RMC as the primary mode.

WCDMA Handsets Body-worn SAR

SAR for body-worn configurations is measured using a 12.2 kbps RMC with TPC bits configured to all “1’s”. The 3G SAR test reduction procedure is applied to other spreading codes and multiple $DPDCH_n$ configurations supported by the handset with 12.2 kbps RMC as the primary mode.

Handsets with Release 5 HSDPA

The 3G SAR test reduction procedure is applied to HSDPA body-worn configurations with 12.2 kbps RMC as the primary mode. Otherwise, SAR is measured for HSDPA using the HSDPA body SAR procedures in the “Release 5 HSDPA Data Devices”, for the highest reported SAR body-worn exposure configuration in 12.2 kbps RMC. Handsets with both HSDPA and HSUPA are tested according to Release 6 HSPA test procedures.

Handsets with Release 6 HSUPA

The 3G SAR test reduction procedure is applied to HSPA (HSUPA/HSDPA with RMC) body-worn configurations with 12.2 kbps RMC as the primary mode. Otherwise, SAR is measured for HSPA using the HSPA body SAR procedures in the “Release 6 HSPA Data Devices”, for the highest reported body-worn exposure SAR configuration in 12.2 kbps RMC. When VOIP is applicable for next to the ear head exposure in HSPA, the 3G SAR test reduction procedure is applied to HSPA with 12.2 kbps RMC as the primary mode; otherwise, the same HSPA configuration used for body-worn measurements is tested for next to the ear head exposure.

Release 5 HSDPA Data Devices

The 3G SAR test reduction procedure is applied to body SAR with 12.2 kbps RMC as the primary mode. Otherwise, body SAR for HSDPA is measured using an FRC with H-Set 1 in Sub-test 1 and a 12.2 kbps RMC configured in Test Loop Mode 1, for the highest reported SAR configuration in 12.2 kbps RMC without HSDPA. HSDPA is configured according to the applicable UE category of a test device. The number of HS-DSCH / HS-PDSCHs, HARQ processes, minimum inter-TTI interval, transport block sizes and RV coding sequence are defined by the H-set. To maintain a consistent test configuration and stable transmission conditions, QPSK is used in the H-set for SAR testing. HS-DPCCH should be configured with a CQI feedback cycle of 4 ms and a CQI repetition factor of 2 to maintain a constant rate of active CQI slots. DPCCH and DPDCH gain factors (β_c, β_d), and HS-DPCCH power offset parameters (Δ_{ACK}, Δ_{NACK}, Δ_{CQI}) are set according to values indicated in below. The CQI value is determined by the UE category, transport block size, number of HS-PDSCHs and modulation used in the H-set.

Sub-test	β_c	β_d	β_d (SF)	β_c/β_d	β_{HS} (1)(2)	CM (3) (dB)	MPR (3) (dB)
1	2/15	15/15	64	2/15	4/15	0.0	0.0
2	12/15 (4)	15/15 (4)	64	12/15 (4)	24/15	1.0	0.0
3	15/15	8/15	64	15/8	30/15	1.5	0.5
4	15/15	4/15	64	15/4	30/15	1.5	0.5

Note 1: Δ_{ACK}, Δ_{NACK} and Δ_{CQI} = 30/15 with β_{HS} = 30/15 * β_c.
Note 2: For the HS-DPCCH power mask requirement test in clause 5.2C, 5.7A, and the Error Vector Magnitude (EVM) with HS-DPCCH test in clause 5.13.1A, and HSDPA EVM with phase discontinuity in clause 5.13.1AA, Δ_{ACK} and Δ_{NACK} = 30/15 with β_{HS} = 30/15 * β_c, and Δ_{CQI} = 24/15 with β_{HS} = 24/15 * β_c.
Note 3: CM = 1 for β_c/β_d = 12/15, β_{HS}/β_c = 24/15. For all other combinations of DPDCH, DPCCH and HS-DPCCH the MPR is based on the relative CM difference. This is applicable for only UEs that support HSDPA in release 6 and later releases.
Note 4: For subtest 2 the β_c/β_d ratio of 12/15 for the TFC during the measurement period (TF1, TF0) is achieved by setting the signalled gain factors for the reference TFC (TF1, TF1) to β_c = 11/15 and β_d = 15/15.

Release 6 HSUPA Data Devices

The 3G SAR test reduction procedure is applied to body SAR with 12.2 kbps RMC as the primary mode. Otherwise, body SAR for HSPA is measured with E-DCH Sub-test 5, using H-Set 1 and QPSK for FRC and a 12.2 kbps RMC configured in Test Loop Mode 1 and power control algorithm 2, according to the highest reported body SAR configuration in 12.2 kbps RMC without HSPA. When VOIP applies to head exposure, the 3G SAR test reduction procedure is applied with 12.2 kbps RMC as the primary mode. Otherwise, the same HSPA configuration used for body SAR measurements are applied to head exposure testing. Due to inner loop power control requirements in HSPA, a communication test set is required for output power and SAR tests. The 12.2 kbps RMC, FRC H-set 1 and E-DCH configurations for HSPA are configured according to the β values indicated in below.

Sub-test	β_c	β_d	β_d (SF)	β_c / β_d	β_{HS} (1)	β_{ec}	β_{ed} (4)(5)	β_{ed} (SF)	β_{ed} (Codes)	CM (2) (dB)	MPR (2)(6) (dB)	AG (5) Index	E-TFCI
1	11/15 (3)	15/15 (3)	64	11/15 (3)	22/15	209/225	1309/225	4	1	1.0	0.0	20	75
2	6/15	15/15	64	6/15	12/15	12/15	94/75	4	1	3.0	2.0	12	67
3	15/15	9/15	64	15/9	30/15	30/15	$\beta_{ed}1$: 47/15 $\beta_{ed}2$: 47/15	4 4	2	2.0	1.0	15	92
4	2/15	15/15	64	2/15	4/15	2/15	56/75	4	1	3.0	2.0	17	71
5	15/15	0	-	-	5/15	5/15	47/15	4	1	1.0	0.0	12	67

Note 1: For sub-test 1 to 4, Δ_{ACK}, Δ_{NACK} and Δ_{CQI} = 30/15 with β_{HS} = 30/15 * β_c. For sub-test 5, Δ_{ACK}, Δ_{NACK} and Δ_{CQI} = 5/15 with β_{HS} = 5/15 * β_c.
Note 2: CM = 1 for β_c/β_d = 12/15, β_{HS}/β_c = 24/15. For all other combinations of DPDCH, DPCCH, HS-DPCCH, E-DPDCH and E-DPCCH the MPR is based on the relative CM difference.
Note 3: For subtest 1 the β_c/β_d ratio of 11/15 for the TFC during the measurement period (TF1, TF0) is achieved by setting the signalled gain factors for the reference TFC (TF1, TF1) to β_c = 10/15 and β_d = 15/15.
Note 4: In case of testing by UE using E-DPDCH Physical Layer category 1, Sub-test 3 is omitted according to TS25.306 Table 5.1g.
Note 5: β_{ed} can not be set directly; it is set by Absolute Grant Value.
Note 6: For subtests 2, 3 and 4, UE may perform E-DPDCH power scaling at max power which could results in slightly smaller MPR values.

<Considerations Related to LTE for Setup and Testing>

This device contains LTE transmitter which follows 3GPP standards, is category 3, supports both QPSK and QAM modulations, and supported LTE band and channel bandwidth is listed in below. The output power was tested per 3GPP TS 36.521-1 maximum transmit procedures for both QPSK and QAM modulation. The results please refer to section 4.6 of this report.

EUT Supported LTE Band and Channel Bandwidth						
LTE Band	**BW 1.4 MHz**	**BW 3 MHz**	**BW 5 MHz**	**BW 10 MHz**	**BW 15 MHz**	**BW 20 MHz**
2	**V**	**V**	**V**	**V**	**V**	**V**
4	**V**	**V**	**V**	**V**	**V**	**V**
5	**V**	**V**	**V**	**V**		
7			**V**	**V**	**V**	**V**
12	**V**	**V**	**V**	**V**		
17			**V**	**V**		

The LTE maximum power reduction (MPR) in accordance with 3GPP TS 36.101 is active all times during LTE operation. The allowed MPR for the maximum output power is specified in below.

Modulation	Channel Bandwidth / RB Configurations						LTE MPR Setting (dB)
	BW 1.4 MHz	BW 3 MHz	BW 5 MHz	BW 10 MHz	BW 15 MHz	BW 20 MHz	
QPSK	> 5	> 4	> 8	> 12	> 16	> 18	1
16QAM	<= 5	<= 4	<= 8	<= 12	<= 16	<= 18	1
16QAM	> 5	> 4	> 8	> 12	> 16	> 18	2
64QAM	<= 5	<= 4	<= 8	<= 12	<= 16	<= 18	2
64QAM	> 5	> 4	> 8	> 12	> 16	> 18	3
256QAM	>= 1						5

Note: MPR is according to the standard and implemented in the circuit (mandatory).

In addition, the device is compliant with additional maximum power reduction (A-MPR) requirements defined in 3GPP TS 36.101 section 6.2.4 that was disabled for all FCC compliance testing.

During LTE SAR testing, the related parameters of operating band, channel bandwidth, uplink channel number, modulation type, and RB was set in base station simulator. When the EUT has registered and communicated to base station simulator, the simulator set to make EUT transmitting the maximum radiated power.

<Considerations Related to WLAN for Setup and Testing>

In general, various vendor specific external test software and chipset based internal test modes are typically used for SAR measurement. These chipset based test mode utilities are generally hardware and manufacturer dependent, and often include substantial flexibility to reconfigure or reprogram a device. A Wi-Fi device must be configured to transmit continuously at the required data rate, channel bandwidth and signal modulation, using the highest transmission duty factor supported by the test mode tools for SAR measurement. The test frequencies established using test mode must correspond to the actual channel frequencies. When 802.11 frame gaps are accounted for in the transmission, a maximum transmission duty factor of 92 - 96% is typically achievable in most test mode configurations. A minimum transmission duty factor of 85% is required to avoid certain hardware and device implementation issues related to wide range SAR scaling. In addition, a periodic transmission duty factor is required for current generation SAR systems to measure SAR correctly. The reported SAR must be scaled to 100% transmission duty factor to determine compliance at the maximum tune-up tolerance limit.

According to KDB 248227 D01, this device has installed WLAN engineering testing software which can provide continuous transmitting RF signal. During WLAN SAR testing, this device was operated to transmit continuously at the maximum transmission duty with specified transmission mode, operating frequency, lowest data rate, and maximum output power.

Initial Test Configuration

An initial test configuration is determined for OFDM transmission modes in 2.4 GHz and 5 GHz bands according to the channel bandwidth, modulation and data rate combination(s) with the highest maximum output power specified for production units in each standalone and aggregated frequency band. When the same maximum power is specified for multiple transmission modes in a frequency band, the largest channel bandwidth, lowest order modulation, lowest data rate and lowest order 802.11a/g/n/ac mode is used for SAR measurement, on the highest measured output power channel in the initial test configuration, for each frequency band.

Subsequent Test Configuration

SAR measurement requirements for the remaining 802.11 transmission mode configurations that have not been tested in the initial test configuration are determined separately for each standalone and aggregated frequency band, in each exposure condition, according to the maximum output power specified for production units. Additional power measurements may be required to determine if SAR measurements are required for subsequent highest output power channels in a subsequent test configuration. When the highest reported SAR for the initial test configuration according to the initial test position or fixed exposure position requirements, is adjusted by the ratio of the subsequent test configuration to initial test configuration specified maximum output power and the adjusted SAR is ≤ 1.2 W/kg, SAR is not required for that subsequent test configuration.

SAR Test Configuration and Channel Selection

When multiple channel bandwidth configurations in a frequency band have the same specified maximum output power, the initial test configuration is using largest channel bandwidth, lowest order modulation, lowest data rate, and lowest order 802.11 mode (i.e., 802.11a is chosen over 802.11n then 802.11ac or 802.11g is chosen over 802.11n). After an initial test configuration is determined, if multiple test channels have the same measured maximum output power, the channel chosen for SAR measurement is determined according to the following.

1) The channel closest to mid-band frequency is selected for SAR measurement.

2) For channels with equal separation from mid-band frequency; for example, high and low channels or two mid-band channels, the higher frequency (number) channel is selected for SAR measurement.

For devices that operate in both U-NII bands using the same transmitter and antenna(s), SAR test reduction is determined according to the following.

1) When the same maximum output power is specified for both bands, begin SAR measurement in U-NII-2A band by applying the OFDM SAR requirements. If the highest reported SAR for a test configuration is ≤ 1.2 W/kg, SAR is not required for U-NII-1 band for that configuration (802.11 mode and exposure condition).

2) When different maximum output power is specified for the bands, begin SAR measurement in the band with higher specified maximum output power. The highest reported SAR for the tested configuration is adjusted by the ratio of lower to higher specified maximum output power for the two bands. When the adjusted SAR is ≤ 1.2 W/kg, SAR is not required for the band with lower maximum output power in that test configuration.

<Considerations Related to Bluetooth for Setup and Testing>

This device has installed Bluetooth engineering testing software which can provide continuous transmitting RF signal. During Bluetooth SAR testing, this device was operated to transmit continuously at the maximum transmission duty with specified transmission mode, operating frequency, lowest data rate, and maximum output power.

4.2 EUT Testing Position

According to KDB 648474 D04, handsets are tested for SAR compliance in head, body-worn accessory and other use configurations described in the following subsections.

4.2.1 Head Exposure Conditions

Head exposure is limited to next to the ear voice mode operations. Head SAR compliance is tested according to the test positions defined in IEEE Std 1528-2003 using the SAM phantom illustrated as below.

1. Define two imaginary lines on the handset

(a) The vertical centerline passes through two points on the front side of the handset - the midpoint of the width w_t of the handset at the level of the acoustic output, and the midpoint of the width w_b of the bottom of the handset.

(b) The horizontal line is perpendicular to the vertical centerline and passes through the center of the acoustic output. The horizontal line is also tangential to the face of the handset at point A.

(c) The two lines intersect at point A. Note that for many handsets, point A coincides with the center of the acoustic output; however, the acoustic output may be located elsewhere on the horizontal line. Also note that the vertical centerline is not necessarily parallel to the front face of the handset, especially for clamshell handsets, handsets with flip covers, and other irregularly shaped handsets.

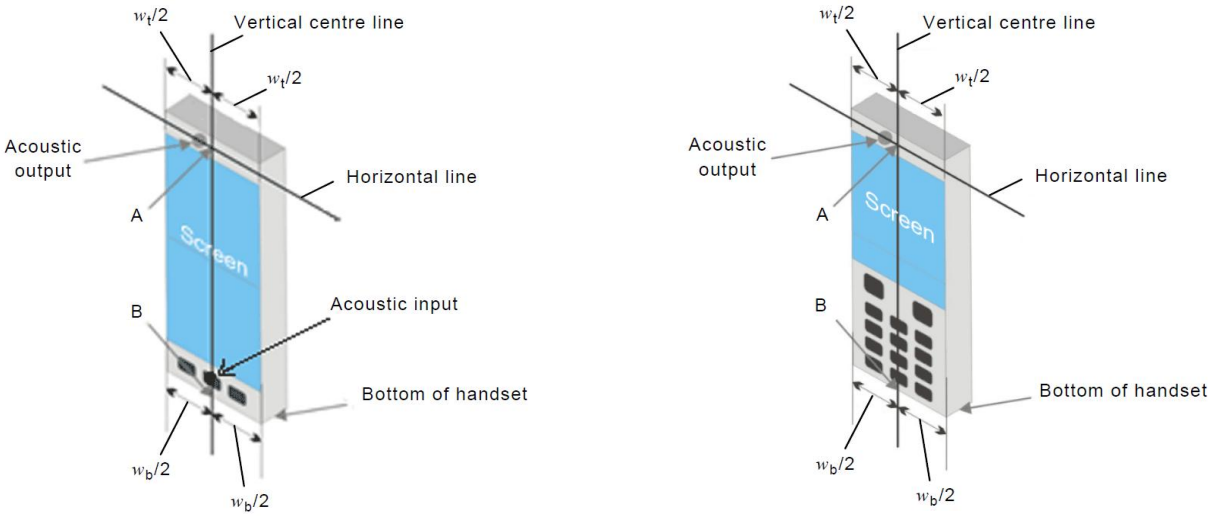

Fig-4.1 Illustration for Handset Vertical and Horizontal Reference Lines

2. Cheek Position

(a) To position the device with the vertical center line of the body of the device and the horizontal line crossing the center piece in a plane parallel to the sagittal plane of the phantom. While maintaining the device in this plane, align the vertical center line with the reference plane containing the three ear and mouth reference point (M: Mouth, RE: Right Ear, and LE: Left Ear) and align the center of the ear piece with the line RE-LE.

(b) To move the device towards the phantom with the ear piece aligned with the line LE-RE until the phone touched the ear. While maintaining the device in the reference plane and maintaining the phone contact with the ear, move the bottom of the phone until any point on the front side is in contact with the cheek of the phantom or until contact with the ear is lost (see Fig-4.2).

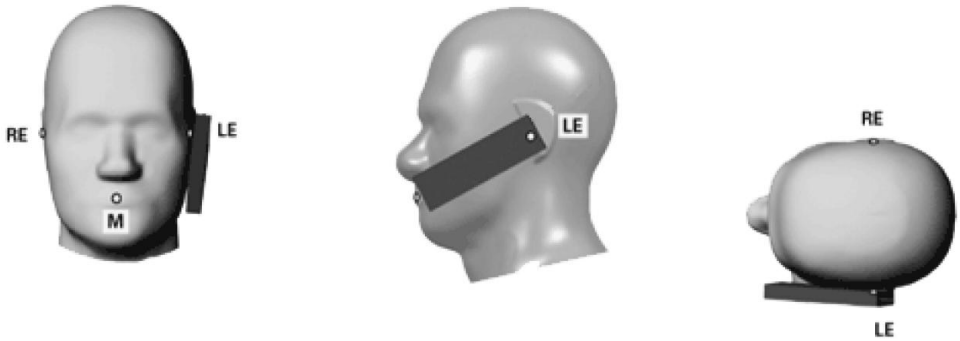

Fig-4.2 Illustration for Cheek Position

3. Tilted Position

(a) To position the device in the “cheek” position described above.

(b) While maintaining the device the reference plane described above and pivoting against the ear, moves it outward away from the mouth by an angle of 15 degrees or until contact with the ear is lost (see Fig-4.3).

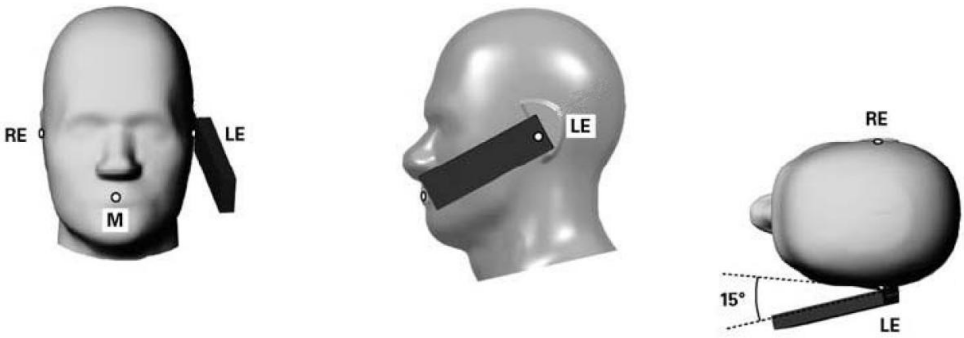

Fig-4.3 Illustration for Tilted Position

4.2.2 Body-worn Accessory Exposure Conditions

Body-worn accessory exposure is typically related to voice mode operations when handsets are carried in body-worn accessories. The body-worn accessory procedures in KDB 447498 D01 are used to test for body-worn accessory SAR compliance, without a headset connected to it. This enables the test results for such configuration to be compatible with that required for hotspot mode when the body-worn accessory test separation distance is greater than or equal to that required for hotspot mode. When the reported SAR for a body-worn accessory, measured without a headset connected to the handset, is > 1.2 W/kg, the highest reported SAR configuration for that wireless mode and frequency band should be repeated for that body-worn accessory with a headset attached to the handset.

Body-worn accessories that do not contain metallic or conductive components may be tested according to worst-case exposure configurations, typically according to the smallest test separation distance required for the group of body-worn accessories with similar operating and exposure characteristics. All body-worn accessories containing metallic components are tested in conjunction with the host device.

Body-worn accessory SAR compliance is based on a single minimum test separation distance for all wireless and operating modes applicable to each body-worn accessory used by the host, and according to the relevant voice and/or data mode transmissions and operations. If a body-worn accessory supports voice only operations in its normal and expected use conditions, testing of data mode for body-worn compliance is not required.

A conservative minimum test separation distance for supporting off-the-shelf body-worn accessories that may be acquired by users of consumer handsets is used to test for body-worn accessory SAR compliance. This distance is determined by the handset manufacturer, according to the requirements of Supplement C 01-01. Devices that are designed to operate on the body of users using lanyards and straps, or without requiring additional body-worn accessories, will be tested using a conservative minimum test separation distance <= 5 mm to support compliance.

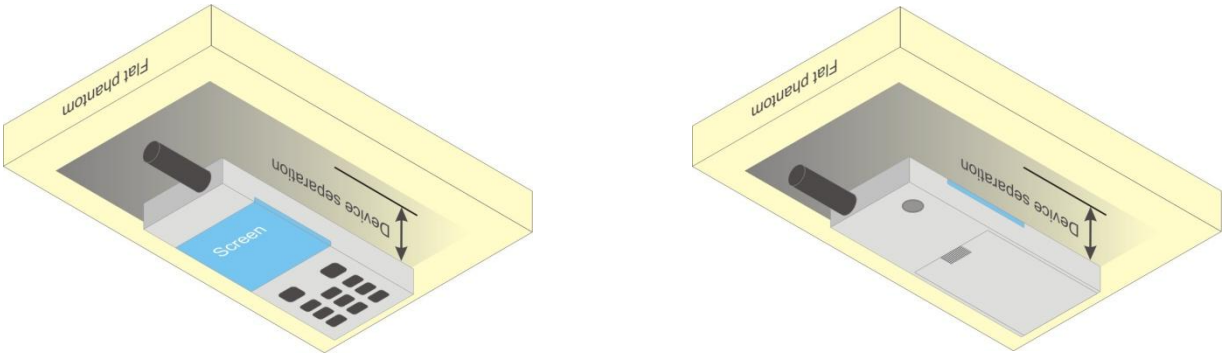

Fig-4.4 Illustration for Body Worn Position

4.2.3 Hotspot Mode Exposure Conditions

For handsets that support hotspot mode operations, with wireless router capabilities and various web browsing functions, the relevant hand and body exposure conditions are tested according to the hotspot SAR procedures in KDB 941225 D06. A test separation distance of 10 mm is required between the phantom and all surfaces and edges with a transmitting antenna located within 25 mm from that surface or edge. When the form factor of a handset is smaller than 9 cm x 5 cm, a test separation distance of 5 mm (instead of 10 mm) is required for testing hotspot mode. When the separation distance required for body-worn accessory testing is larger than or equal to that tested for hotspot mode, in the same wireless mode and for the same surface of the phone, the hotspot mode SAR data may be used to support body-worn accessory SAR compliance for that particular configuration (surface).

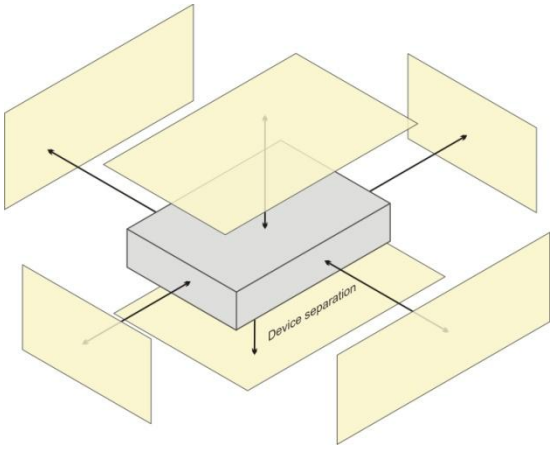

Based on the antenna location shown on appendix D of this report, the SAR testing required for hotspot mode is listed as below.

Antenna	Front Face	Rear Face	Left Side	Right Side	Top Side	Bottom Side
WWAN (L+M Band)	V	V	V	V		V
WWAN (H Band)	V	V	V			V
WLAN / BT	V	V	V		V	

4.3 Tissue Verification

The measuring results for tissue simulating liquid are shown as below.

Test Date	Tissue Type	Frequency (MHz)	Liquid Temp. (℃)	Measured Conductivity (σ)	Measured Permittivity (ε_r)	Target Conductivity (σ)	Target Permittivity (ε_r)	Conductivity Deviation (%)	Permittivity Deviation (%)
Jul. 12, 2017	Head	750	23.3	0.892	42.797	0.89	41.9	0.22	2.14
Jul. 12, 2017	Head	835	23.3	0.921	42.338	0.90	41.5	2.33	2.02
Jul. 13, 2017	Head	835	23.4	0.918	41.678	0.90	41.5	2.00	0.43
Jul. 12, 2017	Head	1750	23.2	1.328	40.136	1.37	40.1	-3.07	0.09
Jul. 12, 2017	Head	1900	23.2	1.458	39.592	1.40	40.0	4.14	-1.02
Jul. 13, 2017	Head	1900	23.4	1.458	39.154	1.40	40.0	4.14	-2.11
Jul. 13, 2017	Head	2450	23.4	1.890	39.974	1.80	39.2	5.00	1.97
Jul. 13, 2017	Head	2600	23.4	2.056	39.473	1.96	39.0	4.90	1.21
Jul. 13, 2017	Head	5250	23.2	4.631	34.694	4.71	35.9	-1.68	-3.36
Jul. 13, 2017	Head	5600	23.2	4.964	34.172	5.07	35.5	-2.09	-3.74
Jul. 13, 2017	Head	5800	23.2	5.176	33.874	5.27	35.3	-1.78	-4.04
Jul. 12, 2017	Body	750	23.3	0.959	53.094	0.96	55.5	-0.10	-4.34
Jul. 12, 2017	Body	835	23.6	1.002	54.241	0.97	55.2	3.30	-1.74
Jul. 11, 2017	Body	1750	23.3	1.444	51.025	1.49	53.4	-3.09	-4.45
Jul. 12, 2017	Body	1750	23.2	1.450	53.218	1.49	53.4	-2.68	-0.34
Jul. 12, 2017	Body	1750	23.1	1.450	53.218	1.49	53.4	-2.68	-0.34
Jul. 11, 2017	Body	1900	23.6	1.566	50.880	1.52	53.3	3.03	-4.54
Jul. 12, 2017	Body	1900	23.2	1.586	52.819	1.52	53.3	4.34	-0.90
Jul. 14, 2017	Body	2450	23.2	1.997	51.558	1.95	52.7	2.41	-2.17
Jul. 19, 2017	Body	2450	23.3	1.999	50.532	1.95	52.7	2.51	-4.11
Jul. 11, 2017	Body	2600	23.3	2.192	50.137	2.16	52.5	1.48	-4.50
Jul. 14, 2017	Body	2600	23.3	2.169	51.144	2.16	52.5	0.42	-2.58
Jul. 14, 2017	Body	5250	23.3	5.395	47.266	5.36	48.9	0.65	-3.34
Jul. 14, 2017	Body	5600	23.3	5.822	46.671	5.77	48.5	0.90	-3.77
Jul. 14, 2017	Body	5800	23.3	6.110	46.403	6.00	48.2	1.83	-3.73

Note:

The dielectric properties of the tissue simulating liquid must be measured within 24 hours before the SAR testing and within ±5% of the target values. Liquid temperature during the SAR testing must be within ±2 ℃.

4.4 System Validation

The SAR measurement system was validated according to procedures in KDB 865664 D01. The validation status in tabulated summary is as below.

Test Date	Probe S/N	Calibration Point		Measured Conductivity (σ)	Measured Permittivity (ε_r)	Validation for CW			Validation for Modulation		
						Sensitivity Range	Probe Linearity	Probe Isotropy	Modulation Type	Duty Factor	PAR
Jul. 12, 2017	7353	Head	750	0.892	42.797	Pass	Pass	Pass	N/A	N/A	N/A
Jul. 12, 2017	3753	Head	835	0.921	42.338	Pass	Pass	Pass	N/A	N/A	N/A
Jul. 13, 2017	7351	Head	835	0.918	41.678	Pass	Pass	Pass	GMSK	Pass	N/A
Jul. 12, 2017	3753	Head	1750	1.328	40.136	Pass	Pass	Pass	N/A	N/A	N/A
Jul. 12, 2017	3753	Head	1900	1.458	39.592	Pass	Pass	Pass	N/A	N/A	N/A
Jul. 13, 2017	7351	Head	1900	1.458	39.154	Pass	Pass	Pass	GMSK	Pass	N/A
Jul. 13, 2017	7351	Head	2450	1.890	39.974	Pass	Pass	Pass	OFDM	N/A	Pass
Jul. 13, 2017	7351	Head	2600	2.056	39.473	Pass	Pass	Pass	N/A	N/A	N/A
Jul. 13, 2017	3753	Head	5250	4.631	34.694	Pass	Pass	Pass	OFDM	N/A	Pass
Jul. 13, 2017	3753	Head	5600	4.964	34.172	Pass	Pass	Pass	OFDM	N/A	Pass
Jul. 13, 2017	3753	Head	5800	5.176	33.874	Pass	Pass	Pass	OFDM	N/A	Pass
Jul. 12, 2017	3753	Body	750	0.959	53.094	Pass	Pass	Pass	N/A	N/A	N/A
Jul. 12, 2017	3753	Body	835	1.002	54.241	Pass	Pass	Pass	GMSK	Pass	N/A
Jul. 11, 2017	3971	Body	1750	1.444	51.025	Pass	Pass	Pass	N/A	N/A	N/A
Jul. 12, 2017	1790	Body	1750	1.450	53.218	Pass	Pass	Pass	N/A	N/A	N/A
Jul. 12, 2017	3753	Body	1750	1.450	53.218	Pass	Pass	Pass	N/A	N/A	N/A
Jul. 11, 2017	3971	Body	1900	1.566	50.880	Pass	Pass	Pass	N/A	N/A	N/A
Jul. 12, 2017	1790	Body	1900	1.586	52.819	Pass	Pass	Pass	GMSK	Pass	N/A
Jul. 14, 2017	3753	Body	2450	1.997	51.558	Pass	Pass	Pass	OFDM	N/A	Pass
Jul. 19, 2017	3753	Body	2450	1.999	50.532	Pass	Pass	Pass	OFDM	N/A	Pass
Jul. 11, 2017	3971	Body	2600	2.192	50.137	Pass	Pass	Pass	N/A	N/A	N/A
Jul. 14, 2017	3753	Body	2600	2.169	51.144	Pass	Pass	Pass	OFDM	N/A	Pass
Jul. 14, 2017	3971	Body	5250	5.395	47.266	Pass	Pass	Pass	OFDM	N/A	Pass
Jul. 14, 2017	3971	Body	5600	5.822	46.671	Pass	Pass	Pass	OFDM	N/A	Pass
Jul. 14, 2017	3971	Body	5800	6.110	46.403	Pass	Pass	Pass	OFDM	N/A	Pass

4.5 System Verification

The measuring result for system verification is tabulated as below.

Test Date	Mode	Frequency (MHz)	1W Target SAR-1g (W/kg)	Measured SAR-1g (W/kg)	Normalized to 1W SAR-1g (W/kg)	Deviation (%)	Dipole S/N	Probe S/N	DAE S/N
Jul. 12, 2017	Head	750	8.24	2.01	8.04	-2.43	1013	3753	916
Jul. 12, 2017	Head	835	9.40	2.47	9.88	5.11	4d121	3753	916
Jul. 13, 2017	Head	835	9.40	2.23	8.92	-5.11	4d121	7351	1431
Jul. 12, 2017	Head	1750	36.90	9.33	37.32	1.14	1055	3753	916
Jul. 12, 2017	Head	1900	40.20	10.30	41.20	2.49	5d036	3753	916
Jul. 13, 2017	Head	1900	40.20	9.74	38.96	-3.08	5d036	7351	1431
Jul. 13, 2017	Head	2450	52.60	13.70	54.80	4.18	737	7351	1431
Jul. 13, 2017	Head	2600	58.10	15.10	60.40	3.96	1020	7351	1431
Jul. 13, 2017	Head	5250	79.60	7.76	77.60	-2.51	1019	3753	916
Jul. 13, 2017	Head	5600	82.40	8.10	81.00	-1.70	1019	3753	916
Jul. 13, 2017	Head	5800	79.40	8.16	81.60	2.77	1019	3753	916
Jul. 12, 2017	Body	750	8.77	2.17	8.68	-1.03	1013	3753	916
Jul. 12, 2017	Body	835	9.57	2.42	9.68	1.15	4d121	3753	916
Jul. 11, 2017	Body	1750	37.50	8.80	35.20	-6.13	1055	3971	579
Jul. 12, 2017	Body	1750	37.50	8.99	35.96	-4.11	1055	1790	861
Jul. 12, 2017	Body	1750	37.50	9.11	36.44	-2.83	1055	3753	916
Jul. 11, 2017	Body	1900	40.10	9.66	38.64	-3.64	5d036	3971	579
Jul. 12, 2017	Body	1900	40.10	9.95	39.80	-0.75	5d036	1790	861
Jul. 14, 2017	Body	2450	51.10	12.00	48.00	-6.07	737	3753	916
Jul. 19, 2017	Body	2450	51.10	12.20	48.80	-4.50	737	3753	916
Jul. 11, 2017	Body	2600	55.70	13.50	54.00	-3.05	1020	3971	579
Jul. 14, 2017	Body	2600	55.70	13.60	54.40	-2.33	1020	3753	916
Jul. 14, 2017	Body	5250	77.60	7.29	72.90	-6.06	1019	3971	579
Jul. 14, 2017	Body	5600	79.60	7.71	77.10	-3.14	1019	3971	579
Jul. 14, 2017	Body	5800	77.30	7.76	77.60	0.39	1019	3971	579

Note:

Comparing to the reference SAR value provided by SPEAG, the validation data should be within its specification of 10 %. The result indicates the system check can meet the variation criterion and the plots can be referred to Appendix A of this report.

4.6 Maximum Output Power

4.6.1 Maximum Target Conducted Power

The maximum conducted average power (Unit: dBm) including tune-up tolerance is shown as below.

Mode	Maximum Burst-Averaged Output Power		Maximum Frame-Averaged Output Power	
	GSM850	GSM1900	GSM850	GSM1900
GSM (GMSK, 1Tx-slot)	33.0	30.0	24.0	21.0
GPRS (GMSK, 1Tx-slot)	33.0	30.0	24.0	21.0
GPRS (GMSK, 2Tx-slot)	**33.0**	**30.0**	27.0	24.0
EDGE (8PSK, 1Tx-slot)	27.0	26.0	18.0	17.0
EDGE (8PSK, 2Tx-slot)	27.0	26.0	21.0	20.0

Note:

1. SAR testing was performed on the maximum frame-averaged power mode.
2. The frame-averaged power is linearly proportion to the slot number configured and it is linearly scaled the maximum burst-averaged power based on time slots. The calculated method is shown as below:
   Frame-averaged power = 10 x log (Burst-averaged power mW x Slot used / 8)

Mode	WCDMA Band II	WCDMA Band IV	WCDMA Band V
RMC 12.2K	**24.0**	**23.5**	**23.0**
HSDPA	23.0	22.5	21.5
HSUPA	23.0	22.5	22.0

Mode	LTE 2	LTE 4	LTE 5	LTE 7
Maximum Target Power	**24.0**	**24.0**	**23.0**	**23.0**

Mode	LTE 12	LTE 17
Maximum Target Power	**24.0**	**24.0**

Mode	2.4G WLAN (without Power Reduction) (Data Mode_Hotspot-on)	2.4G WLAN (with Power Reduction) (Voice Mode_receiver-on)	Power Reduction (dB)
802.11b	**17.5**	**15.0**	2.5
802.11g	17.5	14.5	3.0
802.11n HT20	17.5	14.5	3.0

Mode	5.2G WLAN (without Power Reduction) (Data Mode_Hotspot-on)	5.2G WLAN (with Power Reduction) (Voice Mode_receiver-on)	Power Reduction (dB)
802.11a	17.5	11.5	6.0
802.11n HT20	17.5	11.5	6.0
802.11n HT40	**17.5**	12.0	5.5
802.11ac VHT80	16.5	11.5	5.0

Mode	5.3G WLAN (without Power Reduction) (Data Mode)	5.3G WLAN (with Power Reduction) (Voice Mode_receiver-on)	Power Reduction (dB)
802.11a	17.5	11.5	6.0
802.11n HT20	17.5	11.5	6.0
802.11n HT40	**17.5**	**12.0**	5.5
802.11ac VHT80	16.5	11.5	5.0

Mode	5.6G WLAN (without Power Reduction) (Data Mode)	5.6G WLAN (with Power Reduction) (Voice Mode_receiver-on)	Power Reduction (dB)
802.11a	17.5	11.0	6.5
802.11n HT20	17.5	11.0	6.5
802.11n HT40	**17.5**	**11.0**	6.5
802.11ac VHT80	16.5	10.9	5.6

Mode	5.8G WLAN (without Power Reduction) (Data Mode_Hotspot-on)	5.8G WLAN (with Power Reduction) (Voice Mode_receiver-on)	Power Reduction (dB)
802.11a	17.5	14.0	3.5
802.11n HT20	17.5	14.0	3.5
802.11n HT40	**17.5**	**14.0**	3.5
802.11ac VHT80	16.5	14.0	2.5

Mode	2.4G Bluetooth
Bluetooth	**10.5**

4.6.2 Measured Conducted Power Result

The measuring conducted average power (Unit: dBm) is shown as below.

Band	GSM850			GSM1900		
Channel	128	189	251	512	661	810
Frequency (MHz)	824.2	836.4	848.8	1850.2	1880.0	1909.8
Maximum Burst-Averaged Output Power						
GSM (GMSK, 1Tx-slot)	**32.50**	32.36	32.21	29.04	29.22	29.22
GPRS (GMSK, 1Tx-slot)	32.32	32.13	32.07	29.05	**29.23**	29.20
GPRS (GMSK, 2Tx-slot)	**32.31**	32.06	31.93	28.96	**29.21**	29.19
EDGE (8PSK, 1Tx-slot)	26.48	26.32	26.18	25.73	25.88	25.85
EDGE (8PSK, 2Tx-slot)	26.28	26.13	26.05	25.61	25.81	25.80

Band	WCDMA Band II			WCDMA Band IV			WCDMA Band V			3GPP MPR (dB)
Channel	9262	9400	9538	1312	1413	1513	4132	4182	4233	
Frequency (MHz)	1852.4	1880.0	1907.6	1712.4	1732.6	1752.6	826.4	836.4	846.6	
RMC 12.2K	23.80	**23.84**	23.60	**23.20**	23.08	23.10	**22.48**	22.27	22.06	-
HSDPA Subtest-1	22.84	22.83	22.63	22.17	22.11	22.28	21.49	21.41	21.33	0
HSDPA Subtest-2	22.84	22.88	22.65	22.19	22.16	22.29	21.40	21.42	21.31	0
HSDPA Subtest-3	22.34	21.94	22.14	21.63	21.71	21.78	20.87	20.93	20.82	0.5
HSDPA Subtest-4	22.32	22.37	22.14	21.70	21.66	21.80	20.90	20.91	20.88	0.5
HSUPA Subtest-1	22.78	22.80	22.69	22.19	22.29	22.37	21.62	21.47	21.36	0
HSUPA Subtest-2	20.84	20.93	20.71	20.37	20.31	20.40	19.65	19.54	19.44	2
HSUPA Subtest-3	21.83	21.97	21.72	21.38	21.30	21.34	20.70	20.48	20.38	1
HSUPA Subtest-4	20.88	20.94	20.69	20.36	20.30	20.35	19.69	19.53	19.45	2
HSUPA Subtest-5	22.70	22.90	22.70	22.30	22.30	22.40	21.70	21.50	21.40	0

LTE Band / BW	RB Size	RB Offset	QPSK			3GPP MPR (dB)	16QAM			3GPP MPR (dB)
			Low CH 18607 1850.7 MHz	Mid CH 18900 1880.0 MHz	High CH 19193 1909.3 MHz		Low CH 18607 1850.7 MHz	Mid CH 18900 1880.0 MHz	High CH 19193 1909.3 MHz	
2 / 1.4M	1	0	23.40	23.28	23.10	0	22.47	22.35	22.17	1
	1	2	23.18	23.02	22.74	0	22.27	22.04	21.86	1
	1	5	22.92	22.84	22.67	0	22.10	21.92	21.67	1
	3	0	22.81	22.68	22.39	0	21.90	21.77	21.43	1
	3	1	22.60	22.47	22.23	0	21.68	21.50	21.19	1
	3	3	22.48	22.35	22.18	0	21.60	21.34	21.11	1
	6	0	22.11	21.94	21.71	1	21.13	20.93	20.69	2

LTE Band / BW	RB Size	RB Offset	QPSK			3GPP MPR (dB)	16QAM			3GPP MPR (dB)
			Low CH 18615 1851.5 MHz	Mid CH 18900 1880.0 MHz	High CH 19185 1908.5 MHz		Low CH 18615 1851.5 MHz	Mid CH 18900 1880.0 MHz	High CH 19185 1908.5 MHz	
2 / 3M	1	0	23.47	23.37	23.18	0	22.52	22.42	22.21	1
	1	7	23.29	23.07	22.87	0	22.24	22.13	21.88	1
	1	14	23.14	22.96	22.71	0	22.07	21.97	21.71	1
	8	0	22.32	22.21	21.89	1	21.38	21.18	20.89	2
	8	3	22.18	22.03	21.83	1	21.23	21.00	20.74	2
	8	7	21.99	21.93	21.72	1	21.02	20.83	20.69	2
	15	0	22.23	22.08	21.78	1	21.15	21.04	20.78	2

LTE Band / BW	RB Size	RB Offset	QPSK			3GPP MPR (dB)	16QAM			3GPP MPR (dB)
			Low CH 18625 1852.5 MHz	Mid CH 18900 1880.0 MHz	High CH 19175 1907.5 MHz		Low CH 18625 1852.5 MHz	Mid CH 18900 1880.0 MHz	High CH 19175 1907.5 MHz	
2 / 5M	1	0	23.51	23.41	23.24	0	22.56	22.47	22.28	1
	1	12	23.36	23.16	23.02	0	22.40	22.19	21.98	1
	1	24	23.09	23.04	22.85	0	22.15	22.06	21.91	1
	12	0	22.41	22.29	22.03	1	21.43	21.28	21.00	2
	12	6	22.32	22.13	21.97	1	21.32	21.11	20.88	2
	12	13	22.18	22.05	21.86	1	21.09	20.99	20.83	2
	25	0	22.27	22.17	21.91	1	21.23	21.14	20.96	2

LTE Band / BW	RB Size	RB Offset	QPSK			3GPP MPR (dB)	16QAM			3GPP MPR (dB)
			Low CH 18650	Mid CH 18900	High CH 19150		Low CH 18650	Mid CH 18900	High CH 19150	
			1855.0 MHz	1880.0 MHz	1905.0 MHz		1855.0 MHz	1880.0 MHz	1905.0 MHz	
2 / 10M	1	0	23.57	23.47	23.29	0	22.62	22.50	22.33	1
	1	24	23.34	23.23	23.12	0	22.40	22.27	22.07	1
	1	49	23.22	23.11	23.00	0	22.23	22.13	21.93	1
	25	0	22.47	22.38	22.21	1	21.53	21.39	21.10	2
	25	12	22.40	22.25	22.09	1	21.35	21.21	21.05	2
	25	25	22.33	22.15	22.02	1	21.24	21.12	20.98	2
	50	0	22.37	22.28	22.14	1	21.32	21.27	21.02	2

LTE Band / BW	RB Size	RB Offset	QPSK			3GPP MPR (dB)	16QAM			3GPP MPR (dB)
			Low CH 18675	Mid CH 18900	High CH 19125		Low CH 18675	Mid CH 18900	High CH 19125	
			1857.5 MHz	1880.0 MHz	1902.5 MHz		1857.5 MHz	1880.0 MHz	1902.5 MHz	
2 / 15M	1	0	23.62	23.53	23.39	0	22.66	22.57	22.40	1
	1	37	23.42	23.30	23.21	0	22.40	22.31	22.18	1
	1	74	23.33	23.19	23.04	0	22.28	22.21	21.96	1
	36	0	22.56	22.50	22.32	1	21.64	21.49	21.32	2
	36	19	22.49	22.39	22.23	1	21.51	21.36	21.18	2
	36	39	22.38	22.31	22.15	1	21.37	21.27	21.11	2
	75	0	22.49	22.41	22.29	1	21.51	21.40	21.29	2

LTE Band / BW	RB Size	RB Offset	QPSK			3GPP MPR (dB)	16QAM			3GPP MPR (dB)
			Low CH 18700	Mid CH 18900	High CH 19100		Low CH 18700	Mid CH 18900	High CH 19100	
			1860.0 MHz	1880.0 MHz	1900.0 MHz		1860.0 MHz	1880.0 MHz	1900.0 MHz	
2 / 20M	1	0	**23.67**	23.58	23.44	0	22.72	22.63	22.47	1
	1	50	23.52	23.38	23.28	0	22.56	22.41	22.28	1
	1	99	23.39	23.28	23.17	0	22.37	22.30	22.16	1
	50	0	**22.70**	22.61	22.50	1	21.78	21.61	21.46	2
	50	25	22.58	22.51	22.36	1	21.56	21.48	21.33	2
	50	50	22.56	22.44	22.33	1	21.52	21.40	21.27	2
	100	0	22.61	22.53	22.37	1	21.61	21.51	21.40	2

LTE Band / BW	RB Size	RB Offset	QPSK			3GPP MPR (dB)	16QAM			3GPP MPR (dB)
			Low CH 19957	Mid CH 20175	High CH 20393		Low CH 19957	Mid CH 20175	High CH 20393	
			1710.7 MHz	1732.5 MHz	1754.3 MHz		1710.7 MHz	1732.5 MHz	1754.3 MHz	
4 / 1.4M	1	0	23.25	23.31	22.76	0	22.33	22.35	21.80	1
	1	2	22.71	22.82	22.21	0	21.77	21.87	21.34	1
	1	5	22.47	22.61	22.17	0	21.60	21.66	21.19	1
	3	0	22.67	22.73	22.08	0	21.68	21.78	21.08	1
	3	1	22.49	22.65	22.05	0	21.53	21.65	21.05	1
	3	3	22.31	22.43	22.02	0	21.37	21.41	21.04	1
	6	0	21.97	22.05	21.36	1	20.93	21.05	20.43	2

LTE Band / BW	RB Size	RB Offset	QPSK			3GPP MPR (dB)	16QAM			3GPP MPR (dB)
			Low CH 19965	Mid CH 20175	High CH 20385		Low CH 19965	Mid CH 20175	High CH 20385	
			1711.5 MHz	1732.5 MHz	1753.5 MHz		1711.5 MHz	1732.5 MHz	1753.5 MHz	
4 / 3M	1	0	23.33	23.36	22.86	0	22.36	22.41	21.87	1
	1	7	22.86	22.92	22.44	0	21.87	21.91	21.27	1
	1	14	22.57	22.71	22.21	0	21.54	21.70	21.14	1
	8	0	22.19	22.28	21.69	1	21.18	21.23	20.63	2
	8	3	22.06	22.15	21.51	1	21.06	21.13	20.50	2
	8	7	21.93	21.99	21.44	1	20.81	20.97	20.39	2
	15	0	22.08	22.15	21.66	1	21.06	21.13	20.50	2

LTE Band / BW	RB Size	RB Offset	QPSK			3GPP MPR (dB)	16QAM			3GPP MPR (dB)
			Low CH 19975	Mid CH 20175	High CH 20375		Low CH 19975	Mid CH 20175	High CH 20375	
			1712.5 MHz	1732.5 MHz	1752.5 MHz		1712.5 MHz	1732.5 MHz	1752.5 MHz	
4 / 5M	1	0	23.39	23.42	22.93	0	22.42	22.47	21.94	1
	1	12	22.93	22.99	22.47	0	21.94	22.00	21.42	1
	1	24	22.74	22.80	22.16	0	21.71	21.79	21.16	1
	12	0	22.30	22.37	21.85	1	21.30	21.35	20.80	2
	12	6	22.18	22.26	21.65	1	21.16	21.25	20.68	2
	12	13	22.06	22.10	21.56	1	20.99	21.09	20.52	2
	25	0	22.13	22.26	21.68	1	21.16	21.25	20.61	2

LTE Band / BW	RB Size	RB Offset	QPSK			3GPP MPR (dB)	16QAM			3GPP MPR (dB)
			Low CH 20000	Mid CH 20175	High CH 20350		Low CH 20000	Mid CH 20175	High CH 20350	
			1715.0 MHz	1732.5 MHz	1750.0 MHz		1715.0 MHz	1732.5 MHz	1750.0 MHz	
4 / 10M	1	0	23.44	23.47	22.98	0	22.48	22.52	22.02	1
	1	24	23.00	23.04	22.47	0	22.02	22.07	21.48	1
	1	49	22.78	22.86	22.33	0	21.82	21.89	21.32	1
	25	0	22.41	22.47	21.99	1	21.42	21.48	20.86	2
	25	12	22.35	22.38	21.79	1	21.32	21.38	20.72	2
	25	25	22.10	22.22	21.73	1	21.13	21.21	20.67	2
	50	0	22.27	22.38	21.88	1	21.27	21.38	20.76	2

LTE Band / BW	RB Size	RB Offset	QPSK			3GPP MPR (dB)	16QAM			3GPP MPR (dB)
			Low CH 20025	Mid CH 20175	High CH 20325		Low CH 20025	Mid CH 20175	High CH 20325	
			1717.5 MHz	1732.5 MHz	1747.5 MHz		1717.5 MHz	1732.5 MHz	1747.5 MHz	
4 / 15M	1	0	23.50	23.52	23.06	0	22.55	22.57	22.07	1
	1	37	23.05	23.10	22.69	0	22.09	22.14	21.67	1
	1	74	22.86	22.94	22.44	0	21.86	21.96	21.38	1
	36	0	22.52	22.55	22.10	1	21.50	21.54	21.02	2
	36	19	22.44	22.48	21.91	1	21.41	21.47	20.93	2
	36	39	22.32	22.35	21.88	1	21.26	21.33	20.84	2
	75	0	22.40	22.48	21.99	1	21.41	21.47	20.96	2

LTE Band / BW	RB Size	RB Offset	QPSK			3GPP MPR (dB)	16QAM			3GPP MPR (dB)
			Low CH 20050	Mid CH 20175	High CH 20300		Low CH 20050	Mid CH 20175	High CH 20300	
			1720.0 MHz	1732.5 MHz	1745.0 MHz		1720.0 MHz	1732.5 MHz	1745.0 MHz	
4 / 20M	1	0	23.55	**23.57**	23.11	0	22.59	22.61	22.12	1
	1	50	23.11	23.15	22.63	0	22.12	22.17	21.69	1
	1	99	22.98	23.01	22.55	0	21.94	22.02	21.59	1
	50	0	22.60	**22.63**	22.22	1	21.61	21.63	21.20	2
	50	25	22.55	22.57	22.09	1	21.51	21.56	21.03	2
	50	50	22.45	22.47	22.05	1	21.37	21.44	20.99	2
	100	0	22.55	22.57	22.09	1	21.50	21.56	21.16	2

LTE Band / BW	RB Size	RB Offset	QPSK			3GPP MPR (dB)	16QAM			3GPP MPR (dB)
			Low CH 20407	Mid CH 20525	High CH 20643		Low CH 20407	Mid CH 20525	High CH 20643	
			824.7 MHz	836.5 MHz	848.3 MHz		824.7 MHz	836.5 MHz	848.3 MHz	
5 / 1.4M	1	0	22.73	22.62	22.60	0	21.78	21.67	21.59	1
	1	2	22.62	22.47	22.42	0	21.64	21.45	21.39	1
	1	5	22.52	22.37	22.32	0	21.54	21.34	21.24	1
	3	0	21.56	21.43	21.36	0	20.52	20.38	20.28	1
	3	1	21.61	21.49	21.43	0	20.62	20.45	20.38	1
	3	3	21.49	21.30	21.27	0	20.41	20.23	20.20	1
	6	0	21.57	21.43	21.36	1	20.57	20.38	20.25	2

LTE Band / BW	RB Size	RB Offset	QPSK			3GPP MPR (dB)	16QAM			3GPP MPR (dB)
			Low CH 20415	Mid CH 20525	High CH 20635		Low CH 20415	Mid CH 20525	High CH 20635	
			825.5 MHz	836.5 MHz	847.5 MHz		825.5 MHz	836.5 MHz	847.5 MHz	
5 / 3M	1	0	22.78	22.67	22.65	0	21.82	21.70	21.67	1
	1	7	22.67	22.52	22.50	0	21.74	21.54	21.48	1
	1	14	22.58	22.44	22.34	0	21.57	21.44	21.39	1
	8	0	21.66	21.53	21.47	1	20.62	20.52	20.43	2
	8	3	21.71	21.58	21.53	1	20.69	20.54	20.52	2
	8	7	21.55	21.43	21.41	1	20.59	20.38	20.36	2
	15	0	21.67	21.53	21.47	1	20.66	20.52	20.41	2

LTE Band / BW	RB Size	RB Offset	QPSK			3GPP MPR (dB)	16QAM			3GPP MPR (dB)
			Low CH 20425	Mid CH 20525	High CH 20625		Low CH 20425	Mid CH 20525	High CH 20625	
			826.5 MHz	836.5 MHz	846.5 MHz		826.5 MHz	836.5 MHz	846.5 MHz	
5 / 5M	1	0	22.83	22.72	22.70	0	21.88	21.78	21.75	1
	1	12	22.77	22.60	22.55	0	21.73	21.60	21.54	1
	1	24	22.67	22.51	22.42	0	21.69	21.52	21.43	1
	12	0	21.73	21.66	21.62	1	20.73	20.64	20.59	2
	12	6	21.80	21.68	21.66	1	20.80	20.67	20.64	2
	12	13	21.74	21.57	21.55	1	20.71	20.55	20.50	2
	25	0	21.77	21.66	21.60	1	20.76	20.64	20.59	2

LTE Band / BW	RB Size	RB Offset	QPSK			3GPP MPR (dB)	16QAM			3GPP MPR (dB)
			Low CH 20450	Mid CH 20525	High CH 20600		Low CH 20450	Mid CH 20525	High CH 20600	
			829.0 MHz	836.5 MHz	844.0 MHz		829.0 MHz	836.5 MHz	844.0 MHz	
5 / 10M	1	0	**22.88**	22.78	22.76	0	21.92	21.82	21.79	1
	1	24	22.79	22.67	22.61	0	21.79	21.69	21.65	1
	1	49	22.71	22.59	22.53	0	21.72	21.60	21.54	1
	25	0	21.87	21.77	21.75	1	20.83	20.75	20.72	2
	25	12	**21.89**	21.79	21.77	1	20.89	20.77	20.75	2
	25	25	21.82	21.72	21.70	1	20.81	20.67	20.65	2
	50	0	21.87	21.77	21.75	1	20.85	20.75	20.72	2

LTE Band / BW	RB Size	RB Offset	QPSK			3GPP MPR (dB)	16QAM			3GPP MPR (dB)
			Low CH 20775	Mid CH 21100	High CH 21425		Low CH 20775	Mid CH 21100	High CH 21425	
			2502.5 MHz	2535.0 MHz	2567.5 MHz		2502.5 MHz	2535.0 MHz	2567.5 MHz	
7 / 5M	1	0	22.73	22.77	22.75	0	21.68	21.72	21.70	1
	1	12	22.65	22.69	22.67	0	21.60	21.64	21.62	1
	1	24	22.67	22.71	22.69	0	21.62	21.66	21.64	1
	12	0	21.72	21.76	21.74	1	20.67	20.71	20.69	2
	12	6	21.67	21.71	21.69	1	20.62	20.66	20.64	2
	12	13	21.71	21.75	21.73	1	20.66	20.70	20.68	2
	25	0	21.69	21.73	21.71	1	20.64	20.68	20.66	2

LTE Band / BW	RB Size	RB Offset	QPSK			3GPP MPR (dB)	16QAM			3GPP MPR (dB)
			Low CH 20800	Mid CH 21100	High CH 21400		Low CH 20800	Mid CH 21100	High CH 21400	
			2505.0 MHz	2535.0 MHz	2565.0 MHz		2505.0 MHz	2535.0 MHz	2565.0 MHz	
7 / 10M	1	0	22.80	22.84	22.82	0	21.75	21.79	21.77	1
	1	24	22.72	22.76	22.74	0	21.67	21.71	21.69	1
	1	49	22.74	22.78	22.76	0	21.69	21.73	21.71	1
	25	0	21.79	21.83	21.81	1	20.74	20.78	20.76	2
	25	12	21.74	21.78	21.76	1	20.69	20.73	20.71	2
	25	25	21.78	21.82	21.80	1	20.73	20.77	20.75	2
	50	0	21.76	21.80	21.78	1	20.71	20.75	20.73	2

LTE Band / BW	RB Size	RB Offset	QPSK			3GPP MPR (dB)	16QAM			3GPP MPR (dB)
			Low CH 20825	Mid CH 21100	High CH 21375		Low CH 20825	Mid CH 21100	High CH 21375	
			2507.5 MHz	2535.0 MHz	2562.5 MHz		2507.5 MHz	2535.0 MHz	2562.5 MHz	
7 / 15M	1	0	22.87	22.91	22.89	0	21.82	21.86	21.84	1
	1	37	22.79	22.83	22.81	0	21.74	21.78	21.76	1
	1	74	22.81	22.85	22.83	0	21.76	21.80	21.78	1
	36	0	21.86	21.90	21.88	1	20.81	20.85	20.83	2
	36	19	21.81	21.85	21.83	1	20.76	20.80	20.78	2
	36	39	21.85	21.89	21.87	1	20.80	20.84	20.82	2
	75	0	21.83	21.87	21.85	1	20.78	20.82	20.80	2

LTE Band / BW	RB Size	RB Offset	QPSK			3GPP MPR (dB)	16QAM			3GPP MPR (dB)
			Low CH 20850	Mid CH 21100	High CH 21350		Low CH 20850	Mid CH 21100	High CH 21350	
			2510.0 MHz	2535.0 MHz	2560.0 MHz		2510.0 MHz	2535.0 MHz	2560.0 MHz	
7 / 20M	1	0	**22.93**	**22.97**	**22.95**	0	21.88	21.92	21.90	1
	1	50	22.85	22.89	22.87	0	21.80	21.84	21.82	1
	1	99	22.87	22.91	22.89	0	21.82	21.86	21.84	1
	50	0	**21.92**	**21.96**	**21.94**	1	20.87	20.91	20.89	2
	50	25	21.87	21.91	21.89	1	20.82	20.86	20.84	2
	50	50	21.91	21.95	21.93	1	20.86	20.90	20.88	2
	100	0	21.89	**21.93**	21.91	1	20.84	20.88	20.86	2

LTE Band / BW	RB Size	RB Offset	QPSK			3GPP MPR (dB)	16QAM			3GPP MPR (dB)
			Low CH 23017	Mid CH 23095	High CH 23173		Low CH 23017	Mid CH 23095	High CH 23173	
			699.7 MHz	707.5 MHz	715.3 MHz		699.7 MHz	707.5 MHz	715.3 MHz	
12 / 1.4M	1	0	22.75	23.21	23.03	0	21.77	22.26	22.05	1
	1	2	22.47	22.92	22.60	0	21.51	21.94	21.65	1
	1	5	22.68	23.11	22.84	0	21.65	22.14	21.89	1
	3	0	22.01	22.36	22.13	0	21.85	21.41	21.08	1
	3	1	22.15	22.59	22.36	0	21.11	21.65	21.54	1
	3	3	22.03	22.51	22.30	0	21.01	21.57	21.34	1
	6	0	21.46	21.95	21.75	1	20.41	21.01	20.73	2

LTE Band / BW	RB Size	RB Offset	QPSK			3GPP MPR (dB)	16QAM			3GPP MPR (dB)
			Low CH 23025	Mid CH 23095	High CH 23165		Low CH 23025	Mid CH 23095	High CH 23165	
			700.5 MHz	707.5 MHz	714.5 MHz		700.5 MHz	707.5 MHz	714.5 MHz	
12 / 3M	1	0	22.83	23.26	23.09	0	21.87	22.31	22.13	1
	1	7	22.59	22.99	22.74	0	21.63	22.03	21.80	1
	1	14	22.64	23.16	22.91	0	21.68	22.20	22.06	1
	8	0	21.61	22.00	21.89	1	20.57	21.02	20.87	2
	8	3	21.74	22.20	22.05	1	20.77	21.24	20.99	2
	8	7	21.64	22.13	21.94	1	20.61	21.15	20.98	2
	15	0	21.61	22.10	21.86	1	20.57	21.11	20.75	2

LTE Band / BW	RB Size	RB Offset	QPSK			3GPP MPR (dB)	16QAM			3GPP MPR (dB)
			Low CH 23035	Mid CH 23095	High CH 23155		Low CH 23035	Mid CH 23095	High CH 23155	
			701.5 MHz	707.5 MHz	713.5 MHz		701.5 MHz	707.5 MHz	713.5 MHz	
12 / 5M	1	0	22.89	23.31	23.14	0	21.93	22.36	22.19	1
	1	12	22.71	23.03	22.90	0	21.66	22.08	21.92	1
	1	24	22.80	23.21	22.96	0	21.82	22.25	22.11	1
	12	0	21.72	22.11	21.83	1	20.67	21.10	20.87	2
	12	6	21.88	22.30	22.11	1	20.96	21.32	21.20	2
	12	13	21.80	22.23	22.07	1	20.80	21.24	21.04	2
	25	0	21.76	22.20	22.01	1	20.72	21.18	20.91	2

LTE Band / BW	RB Size	RB Offset	QPSK			3GPP MPR (dB)	16QAM			3GPP MPR (dB)
			Low CH 23060	Mid CH 23095	High CH 23130		Low CH 23060	Mid CH 23095	High CH 23130	
			704.0 MHz	707.5 MHz	711.0 MHz		704.0 MHz	707.5 MHz	711.0 MHz	
12 / 10M	1	0	22.97	**23.36**	23.20	0	22.00	22.40	22.24	1
	1	24	22.76	23.11	22.96	0	21.80	22.14	21.90	1
	1	49	22.92	23.26	23.03	0	21.93	22.30	22.15	1
	25	0	21.84	22.21	22.03	1	20.80	21.21	21.11	2
	25	12	22.09	**22.39**	22.24	1	21.00	21.40	21.30	2
	25	25	21.93	22.32	22.15	1	20.89	21.32	21.16	2
	50	0	21.91	22.29	22.13	1	20.85	21.29	21.05	2

LTE Band / BW	RB Size	RB Offset	QPSK			3GPP MPR (dB)	16QAM			3GPP MPR (dB)
			Low CH 23755	Mid CH 23790	High CH 23825		Low CH 23755	Mid CH 23790	High CH 23825	
			706.5 MHz	710.0 MHz	713.5 MHz		706.5 MHz	710.0 MHz	713.5 MHz	
17 / 5M	1	0	23.21	23.30	23.27	0	22.22	22.35	22.28	1
	1	12	23.03	23.25	23.18	0	22.15	22.28	22.20	1
	1	24	22.95	23.08	23.03	0	21.99	22.11	22.06	1
	12	0	22.11	22.22	22.19	1	21.05	21.22	21.19	2
	12	6	22.17	22.25	22.21	1	21.11	21.27	21.22	2
	12	13	22.22	22.33	22.27	1	21.23	21.35	21.31	2
	25	0	22.08	22.19	22.13	1	21.08	21.19	21.14	2

LTE Band / BW	RB Size	RB Offset	QPSK			3GPP MPR (dB)	16QAM			3GPP MPR (dB)
			Low CH 23780	Mid CH 23790	High CH 23800		Low CH 23780	Mid CH 23790	High CH 23800	
			709.0 MHz	710.0 MHz	711.0 MHz		709.0 MHz	710.0 MHz	711.0 MHz	
17 / 10M	1	0	23.27	**23.35**	23.32	0	22.30	22.40	22.38	1
	1	24	23.13	23.30	23.27	0	22.18	22.34	22.28	1
	1	49	23.06	23.16	23.13	0	22.06	22.16	22.13	1
	25	0	22.25	22.35	22.33	1	21.21	21.32	21.24	2
	25	12	22.30	22.38	22.35	1	21.23	21.36	21.33	2
	25	25	22.34	**22.44**	22.42	1	21.30	21.44	21.38	2
	50	0	22.25	22.33	22.30	1	21.20	21.29	21.22	2

<WLAN 2.4G>

EUT without Power Reduction (Data Mode_Hotspot-on)			
Mode	802.11b		
Channel / Frequency (MHz)	1 (2412)	6 (2437)	11 (2462)
Average Power	**17.26**	17.17	17.09
EUT with Power Reduction (Voice Mode_receiver-on)			
Mode	802.11b		
Channel / Frequency (MHz)	1 (2412)	6 (2437)	11 (2462)
Average Power	**14.50**	14.41	14.40

<WLAN 5.2G>

EUT without Power Reduction (Data Mode_Hotspot-on)		
Mode	802.11n (HT40)	
Channel / Frequency (MHz)	38 (5190)	46 (5230)
Average Power	17.18	**17.26**

<WLAN 5.3G>

EUT without Power Reduction (Data Mode_Hotspot-on)		
Mode	802.11n (HT40)	
Channel / Frequency (MHz)	54 (5270)	62 (5310)
Average Power	17.28	**17.32**
EUT with Power Reduction (Voice Mode_receiver-on)		
Mode	802.11n (HT40)	
Channel / Frequency (MHz)	54 (5270)	62 (5310)
Average Power	11.47	**11.51**

<WLAN 5.6G>

EUT without Power Reduction (Data Mode_Hotspot-on)			
Mode	802.11n (HT40)		
Channel / Frequency (MHz)	102 (5510)	110 (5550)	134 (5670)
Average Power	**17.36**	17.31	**17.27**
EUT with Power Reduction (Voice Mode_receiver-on)			
Mode	802.11n (HT40)		
Channel / Frequency (MHz)	102 (5510)	110 (5550)	134 (5670)
Average Power	**10.99**	**10.95**	10.85

<WLAN 5.8G>

EUT without Power Reduction (Data Mode_Hotspot-on)		
Mode	802.11n (HT40)	
Channel / Frequency (MHz)	151 (5755)	159 (5795)
Average Power	17.13	**17.26**
EUT with Power Reduction (Voice Mode_receiver-on)		
Mode	802.11n (HT40)	
Channel / Frequency (MHz)	151 (5755)	159 (5795)
Average Power	**13.75**	**13.76**

<Bluetooth>

Mode	Bluetooth		
Channel / Frequency (MHz)	0 (2402)	39 (2441)	78 (2480)
Average Power	**10.26**	9.49	9.77

4.7 SAR Testing Results

4.7.1 SAR Test Reduction Considerations

<KDB 447498 D01, General RF Exposure Guidance>

Testing of other required channels within the operating mode of a frequency band is not required when the reported SAR for the mid-band or highest output power channel is:

(1) ≤ 0.8 W/kg or 2.0 W/kg, for 1-g or 10-g respectively, when the transmission band is ≤ 100 MHz

(2) ≤ 0.6 W/kg or 1.5 W/kg, for 1-g or 10-g respectively, when the transmission band is between 100 MHz and 200 MHz

(3) ≤ 0.4 W/kg or 1.0 W/kg, for 1-g or 10-g respectively, when the transmission band is ≥ 200 MHz

<KDB 941225 D01, 3G SAR Measurement Procedures>

The mode tested for SAR is referred to as the primary mode. The equivalent modes considered for SAR test reduction are denoted as secondary modes. Both primary and secondary modes must be in the same frequency band. When the maximum output power and tune-up tolerance specified for production units in a secondary mode is ≤ 1/4 dB higher than the primary mode or when the highest reported SAR of the primary mode is scaled by the ratio of specified maximum output power and tune-up tolerance of secondary to primary mode and the adjusted SAR is ≤ 1.2 W/kg, SAR measurement is not required for the secondary mode.

<KDB 941225 D05, SAR Evaluation Considerations for LTE Devices>

(1) QPSK with 1 RB and 50% RB allocation

Start with the largest channel bandwidth and measure SAR, using the RB offset and required test channel combination with the highest maximum output power among RB offsets at the upper edge, middle and lower edge of each required test channel. When the reported SAR is ≤ 0.8 W/kg, testing of the remaining RB offset configurations and required test channels is not required; otherwise, SAR is required for the remaining required test channels and only for the RB offset configuration with the highest output power for that channel. When the reported SAR of a required test channel is > 1.45 W/kg, SAR is required for all three RB offset configurations for that required test channel.

(2) QPSK with 100% RB allocation

SAR is not required when the highest maximum output power for 100% RB allocation is less than the highest maximum output power in 50% and 1 RB allocations and the highest reported SAR for 1 RB and 50% RB allocation are ≤ 0.8 W/kg. Otherwise, SAR is measured for the highest output power channel; and if the reported SAR is > 1.45 W/kg, the remaining required test channels must also be tested.

(3) Higher order modulations

SAR is required only when the highest maximum output power for the configuration in the higher order modulation is > 1/2 dB higher than the same configuration in QPSK or when the reported SAR for the QPSK configuration is > 1.45 W/kg.

(4) Other channel bandwidth

SAR is required when the highest maximum output power of the smaller channel bandwidth is > 1/2 dB higher than the equivalent channel configurations in the largest channel bandwidth configuration or the reported SAR of a configuration for the largest channel bandwidth is > 1.45 W/kg.

<KDB 248227 D01, SAR Guidance for Wi-Fi Transmitters>

(1) For handsets operating next to ear, hotspot mode or mini-tablet configurations, the initial test position procedures were applied. The test position with the highest extrapolated peak SAR will be used as the initial test position. When the reported SAR of initial test position is <= 0.4 W/kg, SAR testing for remaining test positions is not required. Otherwise, SAR is evaluated at the subsequent highest peak SAR positions until the reported SAR result is <= 0.8 W/kg or all test positions are measured.

(2) For WLAN 2.4 GHz, the highest measured maximum output power channel for DSSS was selected for SAR measurement. When the reported SAR is <= 0.8 W/kg, no further SAR testing is required. Otherwise, SAR is evaluated at the next highest measured output power channel. When any reported SAR is > 1.2 W/kg, SAR is required for the third channel. For OFDM modes (802.11g/n), SAR is not required when the highest reported SAR for DSSS is adjusted by the ratio of OFDM to DSSS specified maximum output power and it is <= 1.2 W/kg.

(3) For WLAN 5 GHz, the initial test configuration was selected according to the transmission mode with the highest maximum output power. When the reported SAR of initial test configuration is > 0.8 W/kg, SAR is required for the subsequent highest measured output power channel until the reported SAR result is <= 1.2 W/kg or all required channels are measured. For other transmission modes, SAR is not required when the highest reported SAR for initial test configuration is adjusted by the ratio of subsequent test configuration to initial test configuration specified maximum output power and it is <= 1.2 W/kg.

<KDB 648474 D04, SAR Guidance for Dynamic Antenna Tuning>

This device supports dynamic antenna tuning for WCDMA II / IV / V and LTE 2 / 4 / 5 / 12 / 17. According to KDB 648474 D04 and FCC guidance in October 2015 TCBC workshop, the following test procedure was followed to demonstrate that SAR results in this report represented the appropriate SAR test conditions. For bands with dynamic tuning implemented, SAR was measured according to the required FCC SAR test procedures with the dynamic tuner active to allow the device to automatically tune to the antenna state for the respective RF exposure test configurations. The tuning state determined by the auto-tune was verified before and after SAR measurement for the highest reported SAR configuration for each band and testing configuration to confirm the antenna state of auto-tune is the same. Additional single point SAR time-sweep measurements were evaluated for other tuner states to determine that the other tuner configurations would result in equivalent or lower SAR values. The additional tuner hardware has no influence to the antenna characteristics, other than impedance matching.

To evaluate all of the tuner states, the 96 tuner states were divided among the aggregate band, mode and exposure combinations so that each combination was evaluated for at least 3 tuner states and also so that at least 3 single point SAR measurements were made for every available tuner state. Single point time-sweep measurements were performed at the peak SAR location determined by the zoom scan of the configuration with the highest reported SAR for each combination. The tuner state was able to be established remotely by QRCT software installed in laptop PC through a micro USB cable connected between the DUT and the laptop PC, so that the DUT was not moved and the probe remained stationary at the same position throughout the entire series of single point measurements for each combination.

The operational description contains more information about the design and implementation of the dynamic antenna tuning.

Supplemental Data for Head SAR

Band	WCDMA II	Band	WCDMA IV	Band	WCDMA V	Band	LTE 2
Mode	RMC12.2K	Mode	RMC12.2K	Mode	RMC12.2K	Mode	QPSK,20M 1RB, OS0
Position	Left Cheek	Position	Left Cheek	Position	Right Cheek	Position	Left Cheek
Channel	9400	Channel	1312	Channel	4132	Channel	18700
Measured 1g SAR (W/kg)	0.027	Measured 1g SAR (W/kg)	0.047	Measured 1g SAR (W/kg)	0.157	Measured 1g SAR (W/kg)	0.017
Average Value of Time Sweep (W/kg)		Average Value of Time Sweep (W/kg)		Average Value of Time Sweep (W/kg)		Average Value of Time Sweep (W/kg)	
Auto-tune	0.058	Auto-tune	0.068	Auto-tune	0.161	Auto-tune	0.063
Default (Open-loop)	0.040	Default (Open-loop)	0.060	Default (Open-loop)	0.131	Default (Open-loop)	0.051
State 0	0.058	State 0	0.064	State 0	0.063	State 0	0.059
State 5	0.052	State 5	0.055	State 5	0.008	State 5	0.022
State 11	0.046	State 11	0.063	State 11	0.104	State 11	0.014
State 12	0.052	State 12	0.042	State 12	0.005	State 12	0.049
State 17	0.052	State 17	0.053	State 17	0.047	State 17	0.025
State 23	0.044	State 23	0.065	State 23	0.149	State 23	0.045
State 24	0.044	State 24	0.057	State 24	0.055	State 24	0.049
State 29	0.046	State 29	0.068	State 29	0.078	State 29	0.057
State 35	0.042	State 35	0.063	State 35	0.135	State 35	0.057
State 36	0.048	State 36	0.038	State 36	0.058	State 36	0.050
State 41	0.049	State 41	0.043	State 41	0.083	State 41	0.060
State 47	0.039	State 47	0.049	State 47	0.142	State 47	0.054
State 48	0.041	State 48	0.047	State 48	0.021	State 48	0.042
State 53	0.042	State 53	0.055	State 53	0.055	State 53	0.058
State 59	0.043	State 59	0.059	State 59	0.121	State 59	0.036
State 60	0.048	State 60	0.012	State 60	0.013	State 60	0.044
State 65	0.048	State 65	0.044	State 65	0.063	State 65	0.018
State 71	0.041	State 71	0.057	State 71	0.153	State 71	0.007
State 72	0.042	State 72	0.059	State 72	0.091	State 72	0.040
State 77	0.042	State 77	0.063	State 77	0.118	State 77	0.058
State 83	0.038	State 83	0.063	State 83	0.149	State 83	0.054
State 84	0.036	State 84	0.041	State 84	0.091	State 84	0.059
State 89	0.032	State 89	0.044	State 89	0.117	State 89	0.010
State 95	0.038	State 95	0.046	State 95	0.127	State 95	0.002

Band	LTE 4	Band	LTE 5	Band	LTE 12	Band	LTE 17
Mode	QPSK,20M 1RB, OS0	Mode	QPSK,10M 1RB, OS0	Mode	QPSK,10M 1RB, OS0	Mode	QPSK,10M 1RB, OS0
Position	Left Cheek	Position	Left Cheek	Position	Left Tilted	Position	Left Tilted
Channel	20175	Channel	20450	Channel	23095	Channel	23790
Measured 1g SAR (W/kg)	0.047	Measured 1g SAR (W/kg)	0.175	Measured 1g SAR (W/kg)	0.064	Measured 1g SAR (W/kg)	0.072
Average Value of Time Sweep (W/kg)		Average Value of Time Sweep (W/kg)		Average Value of Time Sweep (W/kg)		Average Value of Time Sweep (W/kg)	
Auto-tune	0.080	Auto-tune	0.239	Auto-tune	0.141	Auto-tune	0.152
Default (Open-loop)	0.073	Default (Open-loop)	0.188	Default (Open-loop)	0.070	Default (Open-loop)	0.076
State 0	0.044	State 0	0.076	State 0	0.104	State 0	0.129
State 5	0.008	State 5	0.010	State 5	0.132	State 5	0.148
State 11	0.049	State 11	0.118	State 11	0.095	State 11	0.110
State 12	0.043	State 12	0.018	State 12	0.068	State 12	0.061
State 17	0.054	State 17	0.053	State 17	0.042	State 17	0.020
State 23	0.068	State 23	0.172	State 23	0.010	State 23	0.005
State 24	0.052	State 24	0.070	State 24	0.040	State 24	0.005
State 29	0.058	State 29	0.096	State 29	0.041	State 29	0.019
State 35	0.068	State 35	0.160	State 35	0.012	State 35	0.010
State 36	0.055	State 36	0.067	State 36	0.023	State 36	0.011
State 41	0.059	State 41	0.097	State 41	0.086	State 41	0.089
State 47	0.063	State 47	0.163	State 47	0.010	State 47	0.036
State 48	0.042	State 48	0.009	State 48	0.063	State 48	0.074
State 53	0.047	State 53	0.064	State 53	0.066	State 53	0.077
State 59	0.061	State 59	0.144	State 59	0.045	State 59	0.059
State 60	0.049	State 60	0.044	State 60	0.061	State 60	0.089
State 65	0.055	State 65	0.074	State 65	0.066	State 65	0.070
State 71	0.073	State 71	0.182	State 71	0.025	State 71	0.022
State 72	0.066	State 72	0.115	State 72	0.008	State 72	0.003
State 77	0.067	State 77	0.144	State 77	0.019	State 77	0.018
State 83	0.079	State 83	0.181	State 83	0.002	State 83	0.015
State 84	0.050	State 84	0.114	State 84	0.010	State 84	0.011
State 89	0.061	State 89	0.133	State 89	0.079	State 89	0.093
State 95	0.058	State 95	0.143	State 95	0.006	State 95	0.006

Supplemental Data for Body SAR

Band	WCDMA II	Band	WCDMA IV	Band	WCDMA V	Band	LTE 2
Mode	RMC12.2K	Mode	RMC12.2K	Mode	RMC12.2K	Mode	QPSK,20M 1RB, OS0
Position	Bottom Side	Position	Bottom Side	Position	Rear Face	Position	Bottom Side
Channel	9400	Channel	1312	Channel	4132	Channel	19100
Measured 1g SAR (W/kg)	0.721	Measured 1g SAR (W/kg)	0.506	Measured 1g SAR (W/kg)	0.433	Measured 1g SAR (W/kg)	0.873
Average Value of Time Sweep (W/kg)		Average Value of Time Sweep (W/kg)		Average Value of Time Sweep (W/kg)		Average Value of Time Sweep (W/kg)	
Auto-tune	1.17	Auto-tune	1.08	Auto-tune	0.460	Auto-tune	1.18
Default (Open-loop)	0.946	Default (Open-loop)	0.455	Default (Open-loop)	0.438	Default (Open-loop)	1.15
State 0	0.934	State 0	0.946	State 0	0.207	State 0	0.882
State 5	0.858	State 5	0.813	State 5	0.109	State 5	0.836
State 11	0.895	State 11	0.975	State 11	0.325	State 11	0.884
State 12	1.13	State 12	0.531	State 12	0.086	State 12	1.06
State 17	1.15	State 17	0.747	State 17	0.154	State 17	1.11
State 23	0.834	State 23	1.01	State 23	0.451	State 23	0.823
State 24	0.918	State 24	0.849	State 24	0.182	State 24	0.896
State 29	0.988	State 29	0.992	State 29	0.255	State 29	0.962
State 35	0.950	State 35	1.05	State 35	0.416	State 35	0.906
State 36	1.17	State 36	0.593	State 36	0.190	State 36	1.14
State 41	1.07	State 41	0.682	State 41	0.269	State 41	1.09
State 47	0.799	State 47	0.812	State 47	0.408	State 47	0.866
State 48	0.806	State 48	0.730	State 48	0.116	State 48	0.929
State 53	0.902	State 53	0.873	State 53	0.177	State 53	1.00
State 59	0.895	State 59	1.02	State 59	0.373	State 59	0.874
State 60	1.12	State 60	0.558	State 60	0.127	State 60	1.08
State 65	1.14	State 65	0.835	State 65	0.204	State 65	1.16
State 71	0.834	State 71	1.05	State 71	0.438	State 71	0.871
State 72	1.02	State 72	0.893	State 72	0.284	State 72	1.04
State 77	1.02	State 77	0.998	State 77	0.364	State 77	1.12
State 83	0.956	State 83	1.06	State 83	0.431	State 83	1.03
State 84	1.09	State 84	0.607	State 84	0.286	State 84	1.15
State 89	1.06	State 89	0.699	State 89	0.351	State 89	1.16
State 95	0.732	State 95	0.725	State 95	0.350	State 95	0.864

Band	LTE 4	Band	LTE 5	Band	LTE 12	Band	LTE 17
Mode	QPSK,20M 1RB, OS0	Mode	QPSK,10M 1RB, OS0	Mode	QPSK,10M 1RB, OS0	Mode	QPSK,10M 1RB, OS0
Position	Bottom Side	Position	Rear Face	Position	Front Face	Position	Front Face
Channel	20175	Channel	20450	Channel	23095	Channel	23790
Measured 1g SAR (W/kg)	0.663	Measured 1g SAR (W/kg)	0.491	Measured 1g SAR (W/kg)	0.186	Measured 1g SAR (W/kg)	0.211
Average Value of Time Sweep (W/kg)		Average Value of Time Sweep (W/kg)		Average Value of Time Sweep (W/kg)		Average Value of Time Sweep (W/kg)	
Auto-tune	1.12	Auto-tune	0.551	Auto-tune	0.230	Auto-tune	0.421
Default (Open-loop)	0.926	Default (Open-loop)	0.493	Default (Open-loop)	0.216	Default (Open-loop)	0.229
State 0	0.683	State 0	0.256	State 0	0.196	State 0	0.356
State 5	0.575	State 5	0.136	State 5	0.223	State 5	0.415
State 11	0.724	State 11	0.403	State 11	0.175	State 11	0.316
State 12	0.617	State 12	0.104	State 12	0.108	State 12	0.178
State 17	0.862	State 17	0.185	State 17	0.080	State 17	0.138
State 23	0.998	State 23	0.545	State 23	0.004	State 23	0.062
State 24	0.747	State 24	0.227	State 24	0.075	State 24	0.124
State 29	0.823	State 29	0.315	State 29	0.080	State 29	0.137
State 35	0.958	State 35	0.507	State 35	0.057	State 35	0.101
State 36	0.663	State 36	0.232	State 36	0.060	State 36	0.108
State 41	0.811	State 41	0.326	State 41	0.163	State 41	0.264
State 47	0.946	State 47	0.488	State 47	0.005	State 47	0.010
State 48	0.579	State 48	0.147	State 48	0.132	State 48	0.225
State 53	0.663	State 53	0.223	State 53	0.127	State 53	0.231
State 59	0.786	State 59	0.465	State 59	0.098	State 59	0.169
State 60	0.651	State 60	0.154	State 60	0.122	State 60	0.218
State 65	0.878	State 65	0.248	State 65	0.131	State 65	0.211
State 71	1.07	State 71	0.532	State 71	0.008	State 71	0.015
State 72	0.891	State 72	0.356	State 72	0.044	State 72	0.076
State 77	0.970	State 77	0.453	State 77	0.049	State 77	0.082
State 83	1.09	State 83	0.534	State 83	0.012	State 83	0.061
State 84	0.705	State 84	0.202	State 84	0.005	State 84	0.050
State 89	0.812	State 89	0.243	State 89	0.140	State 89	0.262
State 95	0.847	State 95	0.235	State 95	0.006	State 95	0.009

4.7.2 SAR Results for Head Exposure Condition

Plot No.	Band	Mode	Test Position	Ch.	Max. Tune-up Power (dBm)	Measured Conducted Power (dBm)	Scaling Factor	Power Drift (dB)	Measured SAR-1g (W/kg)	Scaled SAR-1g (W/kg)
	GSM850	GPRS10	Right Cheek	128	33.0	32.31	1.17	-0.19	0.116	0.14
	GSM850	GPRS10	Right Tilted	128	33.0	32.31	1.17	0.08	0.062	0.07
01	GSM850	GPRS10	Left Cheek	128	33.0	32.31	1.17	0.01	0.129	**0.15**
	GSM850	GPRS10	Left Tilted	128	33.0	32.31	1.17	-0.06	0.053	0.06
	GSM1900	GPRS10	Right Cheek	661	30.0	29.21	1.20	0.16	0.002	0.00
	GSM1900	GPRS10	Right Tilted	661	30.0	29.21	1.20	0.19	0.001	0.00
02	GSM1900	GPRS10	Left Cheek	661	30.0	29.21	1.20	0.16	0.016	**0.02**
	GSM1900	GPRS10	Left Tilted	661	30.0	29.21	1.20	0.01	0.001	0.00
	WCDMA II	RMC12.2K	Right Cheek	9400	24.0	23.84	1.04	0.01	0.003	0.00
	WCDMA II	RMC12.2K	Right Tilted	9400	24.0	23.84	1.04	0.03	0.001	0.00
03	WCDMA II	RMC12.2K	Left Cheek	9400	24.0	23.84	1.04	-0.03	0.027	**0.03**
	WCDMA II	RMC12.2K	Left Tilted	9400	24.0	23.84	1.04	0.05	0.001	0.00
	WCDMA IV	RMC12.2K	Right Cheek	1312	23.5	23.20	1.07	-0.11	0.004	0.00
	WCDMA IV	RMC12.2K	Right Tilted	1312	23.5	23.20	1.07	-0.17	0.001	0.00
04	WCDMA IV	RMC12.2K	Left Cheek	1312	23.5	23.20	1.07	-0.01	0.047	**0.05**
	WCDMA IV	RMC12.2K	Left Tilted	1312	23.5	23.20	1.07	-0.08	0.001	0.00
05	WCDMA V	RMC12.2K	Right Cheek	4132	23.0	22.48	1.13	-0.08	0.157	**0.18**
	WCDMA V	RMC12.2K	Right Tilted	4132	23.0	22.48	1.13	-0.11	0.103	0.12
	WCDMA V	RMC12.2K	Left Cheek	4132	23.0	22.48	1.13	0.07	0.061	0.07
	WCDMA V	RMC12.2K	Left Tilted	4132	23.0	22.48	1.13	0.15	0.042	0.05

Plot No.	Band	Mode	Test Position	Ch.	RB#	RB Offset	Max. Tune-up Power (dBm)	Measured Conducted Power (dBm)	Scaling Factor	Power Drift (dB)	Measured SAR-1g (W/kg)	Scaled SAR-1g (W/kg)
	LTE 2	QPSK20M	Right Cheek	18700	1	0	24.0	23.67	1.08	0.18	0.002	0.00
	LTE 2	QPSK20M	Right Tilted	18700	1	0	24.0	23.67	1.08	-0.11	0.001	0.00
06	LTE 2	QPSK20M	Left Cheek	18700	1	0	24.0	23.67	1.08	-0.17	0.017	**0.02**
	LTE 2	QPSK20M	Left Tilted	18700	1	0	24.0	23.67	1.08	-0.15	0.012	0.01
	LTE 2	QPSK20M	Right Cheek	18700	50	0	23.0	22.70	1.07	0.01	0.002	0.00
	LTE 2	QPSK20M	Right Tilted	18700	50	0	23.0	22.70	1.07	-0.05	0.001	0.00
	LTE 2	QPSK20M	Left Cheek	18700	50	0	23.0	22.70	1.07	-0.18	0.013	0.01
	LTE 2	QPSK20M	Left Tilted	18700	50	0	23.0	22.70	1.07	0.07	0.011	0.01
	LTE 4	QPSK20M	Right Cheek	20175	1	0	24.0	23.57	1.10	-0.11	0.026	0.03
	LTE 4	QPSK20M	Right Tilted	20175	1	0	24.0	23.57	1.10	0.05	0.001	0.00
07	LTE 4	QPSK20M	Left Cheek	20175	1	0	24.0	23.57	1.10	-0.05	0.047	**0.05**
	LTE 4	QPSK20M	Left Tilted	20175	1	0	24.0	23.57	1.10	-0.01	0.002	0.00
	LTE 4	QPSK20M	Right Cheek	20175	50	0	23.0	22.63	1.09	0.07	0.021	0.02
	LTE 4	QPSK20M	Right Tilted	20175	50	0	23.0	22.63	1.09	0.15	0.001	0.00
	LTE 4	QPSK20M	Left Cheek	20175	50	0	23.0	22.63	1.09	0.13	0.035	0.04
	LTE 4	QPSK20M	Left Tilted	20175	50	0	23.0	22.63	1.09	0.17	0.001	0.00
08	LTE 5	QPSK10M	Right Cheek	20450	1	0	23.0	22.88	1.03	0.00	0.175	**0.18**
	LTE 5	QPSK10M	Right Tilted	20450	1	0	23.0	22.88	1.03	0.11	0.063	0.06
	LTE 5	QPSK10M	Left Cheek	20450	1	0	23.0	22.88	1.03	-0.15	0.097	0.10
	LTE 5	QPSK10M	Left Tilted	20450	1	0	23.0	22.88	1.03	-0.08	0.057	0.06
	LTE 5	QPSK10M	Right Cheek	20450	25	12	22.0	21.89	1.03	0.08	0.116	0.12
	LTE 5	QPSK10M	Right Tilted	20450	25	12	22.0	21.89	1.03	0.01	0.043	0.04
	LTE 5	QPSK10M	Left Cheek	20450	25	12	22.0	21.89	1.03	0.15	0.077	0.08
	LTE 5	QPSK10M	Left Tilted	20450	25	12	22.0	21.89	1.03	0.17	0.045	0.05

Plot No.	Band	Mode	Test Position	Ch.	RB#	RB Offset	Max. Tune-up Power (dBm)	Measured Conducted Power (dBm)	Scaling Factor	Power Drift (dB)	Measured SAR-1g (W/kg)	Scaled SAR-1g (W/kg)
	LTE 7	QPSK20M	Right Cheek	21100	1	0	23.0	22.97	1.01	0.17	0.059	0.06
	LTE 7	QPSK20M	Right Tilted	21100	1	0	23.0	22.97	1.01	0.12	0.032	0.03
09	LTE 7	QPSK20M	Left Cheek	21100	1	0	23.0	22.97	1.01	-0.06	0.082	**0.08**
	LTE 7	QPSK20M	Left Tilted	21100	1	0	23.0	22.97	1.01	0.15	0.030	0.03
	LTE 7	QPSK20M	Right Cheek	21100	50	0	22.0	21.96	1.01	0.13	0.037	0.04
	LTE 7	QPSK20M	Right Tilted	21100	50	0	22.0	21.96	1.01	0.01	0.032	0.03
	LTE 7	QPSK20M	Left Cheek	21100	50	0	22.0	21.96	1.01	-0.05	0.068	0.07
	LTE 7	QPSK20M	Left Tilted	21100	50	0	22.0	21.96	1.01	-0.18	0.010	0.01
	LTE 12	QPSK10M	Right Cheek	23095	1	0	24.0	23.36	1.16	-0.08	0.028	0.03
	LTE 12	QPSK10M	Right Tilted	23095	1	0	24.0	23.36	1.16	-0.07	0.041	0.05
	LTE 12	QPSK10M	Left Cheek	23095	1	0	24.0	23.36	1.16	0.15	0.051	0.06
10	LTE 12	QPSK10M	Left Tilted	23095	1	0	24.0	23.36	1.16	0.13	0.064	**0.07**
	LTE 12	QPSK10M	Right Cheek	23095	25	12	23.0	22.39	1.15	0.17	0.001	0.00
	LTE 12	QPSK10M	Right Tilted	23095	25	12	23.0	22.39	1.15	0.12	0.002	0.00
	LTE 12	QPSK10M	Left Cheek	23095	25	12	23.0	22.39	1.15	0.16	0.046	0.05
	LTE 12	QPSK10M	Left Tilted	23095	25	12	23.0	22.39	1.15	0.17	0.057	0.07
	LTE 17	QPSK10M	Right Cheek	23790	1	0	24.0	23.35	1.16	0.02	0.062	0.07
	LTE 17	QPSK10M	Right Tilted	23790	1	0	24.0	23.35	1.16	-0.08	0.043	0.05
	LTE 17	QPSK10M	Left Cheek	23790	1	0	24.0	23.35	1.16	-0.01	0.045	0.05
11	LTE 17	QPSK10M	Left Tilted	23790	1	0	24.0	23.35	1.16	0.12	0.072	**0.08**
	LTE 17	QPSK10M	Right Cheek	23790	25	25	23.0	22.44	1.14	-0.18	0.048	0.05
	LTE 17	QPSK10M	Right Tilted	23790	25	25	23.0	22.44	1.14	0.13	0.037	0.04
	LTE 17	QPSK10M	Left Cheek	23790	25	25	23.0	22.44	1.14	0.03	0.041	0.05
	LTE 17	QPSK10M	Left Tilted	23790	25	25	23.0	22.44	1.14	0.05	0.063	0.07

Plot No.	Band	Mode	Test Position	Ch.	Max. Tune-up Power (dBm)	Measured Conducted Power (dBm)	Scaling Factor	Power Drift (dB)	Measured SAR-1g (W/kg)	Scaled SAR-1g (W/kg)
	2.4G WLAN	802.11b	Right Cheek	1	15.0	14.50	1.12	0.12	0.913	1.02
	2.4G WLAN	802.11b	Right Tilted	1	15.0	14.50	1.12	0.16	0.743	0.83
	2.4G WLAN	802.11b	Left Cheek	1	15.0	14.50	1.12	0.17	0.411	0.46
	2.4G WLAN	802.11b	Left Tilted	1	15.0	14.50	1.12	0.05	0.432	0.48
12	2.4G WLAN	802.11b	Right Cheek	6	15.0	14.41	1.15	-0.01	1.01	**1.16**
	2.4G WLAN	802.11b	Right Tilted	6	15.0	14.41	1.15	0.13	0.811	0.93
	2.4G WLAN	802.11b	Right Cheek	6	15.0	14.41	1.15	0.01	0.980	1.12
13	5.3G WLAN	802.11n HT40	Right Cheek	62	12.0	11.51	1.12	0.17	1.05	**1.18**
	5.3G WLAN	802.11n HT40	Right Tilted	62	12.0	11.51	1.12	0.13	0.819	0.92
	5.3G WLAN	802.11n HT40	Left Cheek	62	12.0	11.51	1.12	0.03	0.741	0.83
	5.3G WLAN	802.11n HT40	Left Tilted	62	12.0	11.51	1.12	0.05	0.947	1.06
	5.3G WLAN	802.11n HT40	Right Cheek	54	12.0	11.47	1.13	0.16	1.02	1.15
	5.3G WLAN	802.11n HT40	Right Tilted	54	12.0	11.47	1.13	0.17	1.01	1.14
	5.3G WLAN	802.11n HT40	Left Cheek	54	12.0	11.47	1.13	0.03	0.661	0.75
	5.3G WLAN	802.11n HT40	Left Tilted	54	12.0	11.47	1.13	0.17	0.726	0.82
	5.3G WLAN	802.11n HT40	Right Cheek	62	12.0	11.51	1.12	0.12	1.01	1.13
	5.6G WLAN	802.11n HT40	Right Cheek	102	11.0	10.99	1.00	-0.15	0.900	0.90
	5.6G WLAN	802.11n HT40	Right Tilted	102	11.0	10.99	1.00	-0.06	0.816	0.82
	5.6G WLAN	802.11n HT40	Left Cheek	102	11.0	10.99	1.00	-0.15	0.466	0.47
	5.6G WLAN	802.11n HT40	Left Tilted	102	11.0	10.99	1.00	-0.02	0.654	0.66
14	5.6G WLAN	802.11n HT40	Right Cheek	110	11.0	10.95	1.01	0.13	1.01	**1.02**
	5.6G WLAN	802.11n HT40	Right Tilted	110	11.0	10.95	1.01	-0.15	0.769	0.78
	5.6G WLAN	802.11n HT40	Right Cheek	110	11.0	10.95	1.01	0.10	0.970	0.98
15	5.8G WLAN	802.11n HT40	Right Cheek	159	14.0	13.76	1.06	-0.10	1.01	**1.07**
	5.8G WLAN	802.11n HT40	Right Tilted	159	14.0	13.76	1.06	0.05	0.911	0.96
	5.8G WLAN	802.11n HT40	Left Cheek	159	14.0	13.76	1.06	0.16	0.707	0.75
	5.8G WLAN	802.11n HT40	Left Tilted	159	14.0	13.76	1.06	0.17	0.672	0.71
	5.8G WLAN	802.11n HT40	Right Cheek	151	14.0	13.75	1.06	0.03	0.920	0.97
	5.8G WLAN	802.11n HT40	Right Tilted	151	14.0	13.75	1.06	0.05	0.760	0.81
	5.8G WLAN	802.11n HT40	Right Cheek	159	14.0	13.76	1.06	0.04	0.942	1.00

4.7.3 SAR Results for Body-worn Exposure Condition (Test Separation Distance is 10 mm)

Plot No.	Band	Mode	Test Position	Ch.	Max. Tune-up Power (dBm)	Measured Conducted Power (dBm)	Scaling Factor	Power Drift (dB)	Measured SAR-1g (W/kg)	Scaled SAR-1g (W/kg)
16	GSM850	GPRS10	Front Face	128	33.0	32.31	1.17	-0.01	0.672	**0.79**
	GSM850	GPRS10	Rear Face	128	33.0	32.31	1.17	0.08	0.629	0.74
17	GSM1900	GPRS10	Front Face	661	30.0	29.21	1.20	-0.03	0.458	**0.55**
	GSM1900	GPRS10	Rear Face	661	30.0	29.21	1.20	0.04	0.318	0.38
18	WCDMA II	RMC12.2K	Front Face	9400	24.0	23.84	1.04	0.10	0.612	**0.63**
	WCDMA II	RMC12.2K	Rear Face	9400	24.0	23.84	1.04	-0.06	0.386	0.40
19	WCDMA IV	RMC12.2K	Front Face	1312	23.5	23.20	1.07	-0.04	0.453	**0.49**
	WCDMA IV	RMC12.2K	Rear Face	1312	23.5	23.20	1.07	0.05	0.450	0.48
	WCDMA V	RMC12.2K	Front Face	4132	23.0	22.48	1.13	-0.02	0.412	0.46
20	WCDMA V	RMC12.2K	Rear Face	4132	23.0	22.48	1.13	-0.09	0.433	**0.49**

Plot No.	Band	Mode	Test Position	Ch.	RB#	RB Offset	Max. Tune-up Power (dBm)	Measured Conducted Power (dBm)	Scaling Factor	Power Drift (dB)	Measured SAR-1g (W/kg)	Scaled SAR-1g (W/kg)
21	LTE 2	QPSK20M	Front Face	18700	1	0	24.0	23.67	1.08	0.11	0.549	**0.59**
	LTE 2	QPSK20M	Rear Face	18700	1	0	24.0	23.67	1.08	0.06	0.331	0.36
	LTE 2	QPSK20M	Front Face	18700	50	0	23.0	22.70	1.07	-0.04	0.325	0.35
	LTE 2	QPSK20M	Rear Face	18700	50	0	23.0	22.70	1.07	-0.08	0.299	0.32
22	LTE 4	QPSK20M	Front Face	20175	1	0	24.0	23.57	1.10	0.10	0.601	**0.66**
	LTE 4	QPSK20M	Rear Face	20175	1	0	24.0	23.57	1.10	0.18	0.433	0.48
	LTE 4	QPSK20M	Front Face	20175	50	0	23.0	22.63	1.09	0.06	0.400	0.44
	LTE 4	QPSK20M	Rear Face	20175	50	0	23.0	22.63	1.09	0.03	0.377	0.41
	LTE 5	QPSK10M	Front Face	20450	1	0	23.0	22.88	1.03	-0.02	0.475	0.49
23	LTE 5	QPSK10M	Rear Face	20450	1	0	23.0	22.88	1.03	0.02	0.491	**0.50**
	LTE 5	QPSK10M	Front Face	20450	25	12	22.0	21.89	1.03	-0.11	0.413	0.42
	LTE 5	QPSK10M	Rear Face	20450	25	12	22.0	21.89	1.03	0.12	0.381	0.39
	LTE 7	QPSK20M	Front Face	21100	1	0	23.0	22.97	1.01	0.09	0.436	0.44
24	LTE 7	QPSK20M	Rear Face	21100	1	0	23.0	22.97	1.01	0.01	0.629	**0.63**
	LTE 7	QPSK20M	Front Face	21100	50	0	22.0	21.96	1.01	-0.17	0.355	0.36
	LTE 7	QPSK20M	Rear Face	21100	50	0	22.0	21.96	1.01	-0.07	0.413	0.42
25	LTE 12	QPSK10M	Front Face	23095	1	0	24.0	23.36	1.16	-0.06	0.186	**0.22**
	LTE 12	QPSK10M	Rear Face	23095	1	0	24.0	23.36	1.16	-0.08	0.171	0.20
	LTE 12	QPSK10M	Front Face	23095	25	12	23.0	22.39	1.15	-0.01	0.161	0.19
	LTE 12	QPSK10M	Rear Face	23095	25	12	23.0	22.39	1.15	0.07	0.142	0.16
26	LTE 17	QPSK10M	Front Face	23790	1	0	24.0	23.35	1.16	-0.08	0.211	**0.25**
	LTE 17	QPSK10M	Rear Face	23790	1	0	24.0	23.35	1.16	0.01	0.195	0.23
	LTE 17	QPSK10M	Front Face	23790	25	25	23.0	22.44	1.14	0.18	0.203	0.23
	LTE 17	QPSK10M	Rear Face	23790	25	25	23.0	22.44	1.14	0.16	0.178	0.20

Plot No.	Band	Mode	Test Position	Ch.	Max. Tune-up Power (dBm)	Measured Conducted Power (dBm)	Scaling Factor	Power Drift (dB)	Measured SAR-1g (W/kg)	Scaled SAR-1g (W/kg)
	2.4G WLAN	802.11b	Front Face	1	17.5	17.26	1.06	0.08	0.295	0.31
27	2.4G WLAN	802.11b	Rear Face	1	17.5	17.26	1.06	0.01	0.359	**0.38**
29	5.3G WLAN	802.11n HT40	Front Face	62	17.5	17.32	1.04	0.00	0.438	**0.46**
	5.3G WLAN	802.11n HT40	Rear Face	62	17.5	17.32	1.04	0.08	0.342	0.36
30	5.6G WLAN	802.11n HT40	Front Face	102	17.5	17.36	1.03	0.01	0.574	**0.59**
	5.6G WLAN	802.11n HT40	Rear Face	102	17.5	17.36	1.03	-0.06	0.403	0.42
31	5.8G WLAN	802.11n HT40	Front Face	159	17.5	17.26	1.06	-0.07	0.343	**0.36**
	5.8G WLAN	802.11n HT40	Rear Face	159	17.5	17.26	1.06	0.05	0.335	0.35

Plot No.	Band	Mode	Test Position	Ch.	Max. Tune-up Power (dBm)	Measured Conducted Power (dBm)	Scaling Factor	Power Drift (dB)	Measured SAR-1g (W/kg)	Scaled SAR-1g (W/kg)
	Bluetooth	DH1	Front Face	0	10.5	10.26	1.06	0.05	0.021	0.02
32	Bluetooth	DH1	Rear Face	0	10.5	10.26	1.06	-0.02	0.029	**0.03**

4.7.4 SAR Results for Hotspot Exposure Condition (Test Separation Distance is 10 mm)

Plot No.	Band	Mode	Test Position	Ch.	Max. Tune-up Power (dBm)	Measured Conducted Power (dBm)	Scaling Factor	Power Drift (dB)	Measured SAR-1g (W/kg)	Scaled SAR-1g (W/kg)
16	GSM850	GPRS10	Front Face	128	33.0	32.31	1.17	-0.01	0.672	**0.79**
	GSM850	GPRS10	Rear Face	128	33.0	32.31	1.17	0.08	0.629	0.74
	GSM850	GPRS10	Left Side	128	33.0	32.31	1.17	-0.15	0.080	0.09
	GSM850	GPRS10	Right Side	128	33.0	32.31	1.17	0.05	0.284	0.33
	GSM850	GPRS10	Bottom Side	128	33.0	32.31	1.17	-0.19	0.343	0.40
	GSM1900	GPRS10	Front Face	661	30.0	29.21	1.20	-0.03	0.458	0.55
	GSM1900	GPRS10	Rear Face	661	30.0	29.21	1.20	0.04	0.318	0.38
	GSM1900	GPRS10	Left Side	661	30.0	29.21	1.20	-0.15	0.001	0.00
33	GSM1900	GPRS10	Bottom Side	661	30.0	29.21	1.20	0.11	0.544	**0.65**
	WCDMA II	RMC12.2K	Front Face	9400	24.0	23.84	1.04	0.10	0.612	0.63
	WCDMA II	RMC12.2K	Rear Face	9400	24.0	23.84	1.04	-0.06	0.386	0.40
	WCDMA II	RMC12.2K	Left Side	9400	24.0	23.84	1.04	0.11	0.001	0.00
34	WCDMA II	RMC12.2K	Bottom Side	9400	24.0	23.84	1.04	-0.11	0.721	**0.75**
	WCDMA IV	RMC12.2K	Front Face	1312	23.5	23.20	1.07	-0.04	0.453	0.49
	WCDMA IV	RMC12.2K	Rear Face	1312	23.5	23.20	1.07	0.05	0.450	0.48
	WCDMA IV	RMC12.2K	Left Side	1312	23.5	23.20	1.07	-0.02	0.065	0.07
35	WCDMA IV	RMC12.2K	Bottom Side	1312	23.5	23.20	1.07	0.18	0.506	**0.54**
	WCDMA V	RMC12.2K	Front Face	4132	23.0	22.48	1.13	-0.02	0.412	0.46
20	WCDMA V	RMC12.2K	Rear Face	4132	23.0	22.48	1.13	-0.09	0.433	**0.49**
	WCDMA V	RMC12.2K	Left Side	4132	23.0	22.48	1.13	-0.15	0.074	0.08
	WCDMA V	RMC12.2K	Right Side	4132	23.0	22.48	1.13	0.05	0.216	0.24
	WCDMA V	RMC12.2K	Bottom Side	4132	23.0	22.48	1.13	-0.02	0.304	0.34

Plot No.	Band	Mode	Test Position	Ch.	RB#	RB Offset	Max. Tune-up Power (dBm)	Measured Conducted Power (dBm)	Scaling Factor	Power Drift (dB)	Measured SAR-1g (W/kg)	Scaled SAR-1g (W/kg)
	LTE 2	QPSK20M	Front Face	18700	1	0	24.0	23.67	1.08	0.11	0.549	0.59
	LTE 2	QPSK20M	Rear Face	18700	1	0	24.0	23.67	1.08	0.06	0.331	0.36
	LTE 2	QPSK20M	Left Side	18700	1	0	24.0	23.67	1.08	0.03	0.001	0.00
	LTE 2	QPSK20M	Bottom Side	18700	1	0	24.0	23.67	1.08	-0.11	0.766	0.83
	LTE 2	QPSK20M	Front Face	18700	50	0	23.0	22.70	1.07	-0.04	0.325	0.35
	LTE 2	QPSK20M	Rear Face	18700	50	0	23.0	22.70	1.07	-0.08	0.299	0.32
	LTE 2	QPSK20M	Left Side	18700	50	0	23.0	22.70	1.07	-0.11	0.001	0.00
	LTE 2	QPSK20M	Bottom Side	18700	50	0	23.0	22.70	1.07	-0.04	0.572	0.61
	LTE 2	QPSK20M	Bottom Side	18900	1	0	24.0	23.58	1.10	0.12	0.798	0.88
36	LTE 2	QPSK20M	Bottom Side	19100	1	0	24.0	23.44	1.14	0.06	0.873	**0.99**
	LTE 2	QPSK20M	Bottom Side	18700	100	0	23.0	22.61	1.09	0.06	0.578	0.63
	LTE 2	QPSK20M	Bottom Side	19100	1	0	24.0	23.44	1.14	0.07	0.850	0.97

Plot No.	Band	Mode	Test Position	Ch.	RB#	RB Offset	Max. Tune-up Power (dBm)	Measured Conducted Power (dBm)	Scaling Factor	Power Drift (dB)	Measured SAR-1g (W/kg)	Scaled SAR-1g (W/kg)
	LTE 4	QPSK20M	Front Face	20175	1	0	24.0	23.57	1.10	0.10	0.601	0.66
	LTE 4	QPSK20M	Rear Face	20175	1	0	24.0	23.57	1.10	0.18	0.433	0.48
	LTE 4	QPSK20M	Left Side	20175	1	0	24.0	23.57	1.10	-0.16	0.031	0.03
37	LTE 4	QPSK20M	Bottom Side	20175	1	0	24.0	23.57	1.10	0.06	0.663	**0.73**
	LTE 4	QPSK20M	Front Face	20175	50	0	23.0	22.63	1.09	0.06	0.400	0.44
	LTE 4	QPSK20M	Rear Face	20175	50	0	23.0	22.63	1.09	0.03	0.377	0.41
	LTE 4	QPSK20M	Left Side	20175	50	0	23.0	22.63	1.09	-0.08	0.001	0.00
	LTE 4	QPSK20M	Bottom Side	20175	50	0	23.0	22.63	1.09	-0.11	0.559	0.61
	LTE 5	QPSK10M	Front Face	20450	1	0	23.0	22.88	1.03	-0.02	0.475	0.49
23	LTE 5	QPSK10M	Rear Face	20450	1	0	23.0	22.88	1.03	0.02	0.491	**0.50**
	LTE 5	QPSK10M	Left Side	20450	1	0	23.0	22.88	1.03	-0.08	0.059	0.06
	LTE 5	QPSK10M	Right Side	20450	1	0	23.0	22.88	1.03	-0.11	0.231	0.24
	LTE 5	QPSK10M	Bottom Side	20450	1	0	23.0	22.88	1.03	-0.08	0.335	0.34
	LTE 5	QPSK10M	Front Face	20450	25	12	22.0	21.89	1.03	-0.11	0.413	0.42
	LTE 5	QPSK10M	Rear Face	20450	25	12	22.0	21.89	1.03	0.12	0.381	0.39
	LTE 5	QPSK10M	Left Side	20450	25	12	22.0	21.89	1.03	-0.04	0.055	0.06
	LTE 5	QPSK10M	Right Side	20450	25	12	22.0	21.89	1.03	0.12	0.186	0.19
	LTE 5	QPSK10M	Bottom Side	20450	25	12	22.0	21.89	1.03	0.18	0.262	0.27
	LTE 7	QPSK20M	Front Face	21100	1	0	23.0	22.97	1.01	0.09	0.436	0.44
	LTE 7	QPSK20M	Rear Face	21100	1	0	23.0	22.97	1.01	0.01	0.629	0.63
	LTE 7	QPSK20M	Left Side	21100	1	0	23.0	22.97	1.01	0.08	0.298	0.30
	LTE 7	QPSK20M	Bottom Side	21100	1	0	23.0	22.97	1.01	-0.15	1.03	1.04
	LTE 7	QPSK20M	Front Face	21100	50	0	22.0	21.96	1.01	-0.17	0.355	0.36
	LTE 7	QPSK20M	Rear Face	21100	50	0	22.0	21.96	1.01	-0.07	0.413	0.42
	LTE 7	QPSK20M	Left Side	21100	50	0	22.0	21.96	1.01	0.08.	0.246	0.25
	LTE 7	QPSK20M	Bottom Side	21100	50	0	22.0	21.96	1.01	0.01	0.821	0.83
38	LTE 7	QPSK20M	Bottom Side	20850	1	0	23.0	22.93	1.02	0.02	1.17	**1.19**
	LTE 7	QPSK20M	Bottom Side	21350	1	0	23.0	22.95	1.01	-0.01	0.991	1.00
	LTE 7	QPSK20M	Bottom Side	20850	50	0	22.0	21.92	1.02	-0.07	0.902	0.92
	LTE 7	QPSK20M	Bottom Side	21350	50	0	22.0	21.94	1.01	-0.06	0.783	0.79
	LTE 7	QPSK20M	Bottom Side	21100	100	0	22.0	21.93	1.02	-0.11	0.829	0.84
	LTE 7	QPSK20M	Bottom Side	20850	1	0	23.0	22.93	1.02	-0.04	1.11	1.13
25	LTE 12	QPSK10M	Front Face	23095	1	0	24.0	23.36	1.16	-0.06	0.186	**0.22**
	LTE 12	QPSK10M	Rear Face	23095	1	0	24.0	23.36	1.16	-0.08	0.171	0.20
	LTE 12	QPSK10M	Left Side	23095	1	0	24.0	23.36	1.16	-0.11	0.062	0.07
	LTE 12	QPSK10M	Right Side	23095	1	0	24.0	23.36	1.16	0.05	0.141	0.16
	LTE 12	QPSK10M	Bottom Side	23095	1	0	24.0	23.36	1.16	-0.07	0.133	0.15
	LTE 12	QPSK10M	Front Face	23095	25	12	23.0	22.39	1.15	-0.01	0.161	0.19
	LTE 12	QPSK10M	Rear Face	23095	25	12	23.0	22.39	1.15	0.07	0.142	0.16
	LTE 12	QPSK10M	Left Side	23095	25	12	23.0	22.39	1.15	0.11	0.005	0.01
	LTE 12	QPSK10M	Right Side	23095	25	12	23.0	22.39	1.15	0.18	0.133	0.15
	LTE 12	QPSK10M	Bottom Side	23095	25	12	23.0	22.39	1.15	0.17	0.121	0.14
26	LTE 17	QPSK10M	Front Face	23790	1	0	24.0	23.35	1.16	-0.08	0.211	**0.25**
	LTE 17	QPSK10M	Rear Face	23790	1	0	24.0	23.35	1.16	0.01	0.195	0.23
	LTE 17	QPSK10M	Left Side	23790	1	0	24.0	23.35	1.16	-0.08	0.047	0.05
	LTE 17	QPSK10M	Right Side	23790	1	0	24.0	23.35	1.16	0.05	0.168	0.20
	LTE 17	QPSK10M	Bottom Side	23790	1	0	24.0	23.35	1.16	0.11	0.159	0.18
	LTE 17	QPSK10M	Front Face	23790	25	25	23.0	22.44	1.14	0.18	0.203	0.23
	LTE 17	QPSK10M	Rear Face	23790	25	25	23.0	22.44	1.14	0.16	0.178	0.20
	LTE 17	QPSK10M	Left Side	23790	25	25	23.0	22.44	1.14	0.15	0.003	0.00
	LTE 17	QPSK10M	Right Side	23790	25	25	23.0	22.44	1.14	-0.11	0.159	0.18
	LTE 17	QPSK10M	Bottom Side	23790	25	25	23.0	22.44	1.14	0.15	0.152	0.17

Plot No.	Band	Mode	Test Position	Ch.	Max. Tune-up Power (dBm)	Measured Conducted Power (dBm)	Scaling Factor	Power Drift (dB)	Measured SAR-1g (W/kg)	Scaled SAR-1g (W/kg)
	2.4G WLAN	802.11b	Front Face	1	17.5	17.26	1.06	0.08	0.295	0.31
27	2.4G WLAN	802.11b	Rear Face	1	17.5	17.26	1.06	0.01	0.359	**0.38**
	2.4G WLAN	802.11b	Left Side	1	17.5	17.26	1.06	-0.11	0.159	0.17
	2.4G WLAN	802.11b	Top Side	1	17.5	17.26	1.06	-0.15	0.216	0.23
28	5.2G WLAN	802.11n HT40	Front Face	46	17.5	17.26	1.06	-0.02	0.314	**0.33**
	5.2G WLAN	802.11n HT40	Rear Face	46	17.5	17.26	1.06	0.11	0.286	0.30
	5.2G WLAN	802.11n HT40	Left Side	46	17.5	17.26	1.06	0.18	0.145	0.15
	5.2G WLAN	802.11n HT40	Top Side	46	17.5	17.26	1.06	-0.11	0.001	0.00
31	5.8G WLAN	802.11n HT40	Front Face	159	17.5	17.26	1.06	-0.07	0.343	**0.36**
	5.8G WLAN	802.11n HT40	Rear Face	159	17.5	17.26	1.06	0.05	0.335	0.35
	5.8G WLAN	802.11n HT40	Left Side	159	17.5	17.26	1.06	0.11	0.145	0.15
	5.8G WLAN	802.11n HT40	Top Side	159	17.5	17.26	1.06	0.01	0.230	0.24

4.7.5 SAR Measurement Variability

According to KDB 865664 D01, SAR measurement variability was assessed for each frequency band, which is determined by the SAR probe calibration point and tissue-equivalent medium used for the device measurements. When both head and body tissue-equivalent media are required for SAR measurements in a frequency band, the variability measurement procedures should be applied to the tissue medium with the highest measured SAR, using the highest measured SAR configuration for that tissue-equivalent medium. Alternatively, if the highest measured SAR for both head and body tissue-equivalent media are ≤ 1.45 W/kg and the ratio of these highest SAR values, i.e., largest divided by smallest value, is ≤ 1.10, the highest SAR configuration for either head or body tissue-equivalent medium may be used to perform the repeated measurement. These additional measurements are repeated after the completion of all measurements requiring the same head or body tissue-equivalent medium in a frequency band. The test device should be returned to ambient conditions (normal room temperature) with the battery fully charged before it is re-mounted on the device holder for the repeated measurement(s) to minimize any unexpected variations in the repeated results.

SAR repeated measurement procedure:

1. When the highest measured SAR is < 0.80 W/kg, repeated measurement is not required.
2. When the highest measured SAR is >= 0.80 W/kg, repeat that measurement once.
3. If the ratio of largest to smallest SAR for the original and first repeated measurements is > 1.20, or when the original or repeated measurement is >= 1.45 W/kg, perform a second repeated measurement.
4. If the ratio of largest to smallest SAR for the original, first and second repeated measurements is > 1.20, and the original, first or second repeated measurement is >= 1.5 W/kg, perform a third repeated measurement.

Band	Test Position	Ch.	Original Measured SAR-1g (W/kg)	1st Repeated SAR-1g (W/kg)	L/S Ratio	2nd Repeated SAR-1g (W/kg)	L/S Ratio	3rd Repeated SAR-1g (W/kg)	L/S Ratio
2.4G WLAN	Right Cheek	6	1.01	0.98	1.03	N/A	N/A	N/A	N/A
5.3G WLAN	Right Cheek	62	1.05	1.01	1.04	N/A	N/A	N/A	N/A
5.6G WLAN	Right Cheek	110	1.01	0.97	1.04	N/A	N/A	N/A	N/A
5.8G WLAN	Right Cheek	159	1.01	0.942	1.07	N/A	N/A	N/A	N/A
LTE 2	Bottom Side	19100	0.873	0.85	1.03	N/A	N/A	N/A	N/A
LTE 7	Bottom Side	20850	1.17	1.11	1.05	N/A	N/A	N/A	N/A

4.7.6 Simultaneous Multi-band Transmission Evaluation

<Possibilities of Simultaneous Transmission>

The simultaneous transmission possibilities for this device are listed as below.

Simultaneous TX Combination	Capable Transmit Configurations	Head Exposure Condition	Body-worn Exposure Condition	Hotspot Exposure Condition
1	GSM + WLAN 2.4G	Yes	Yes	Yes
2	GSM + WLAN 5G	Yes	Yes	Yes
3	GSM + BT (Data)	No	Yes	No
4	WCDMA + WLAN 2.4G	Yes	Yes	Yes
5	WCDMA + WLAN 5G	Yes	Yes	Yes
6	WCDMA + BT (Data)	No	Yes	No
7	LTE + WLAN 2.4G	Yes	Yes	Yes
8	LTE + WLAN 5G	Yes	Yes	Yes
9	LTE + BT (Data)	No	Yes	No

Note :

1. The WLAN 2.4G and WLAN 5G cannot transmit simultaneously.
2. The WLAN and Bluetooth cannot transmit simultaneously.

<SAR Summation Analysis>

Simultaneous transmission SAR test exclusion is determined for each operating configuration and exposure condition according to the reported standalone SAR of each applicable simultaneous transmitting antenna. When the sum of SAR_{1g} of all simultaneously transmitting antennas in an operating mode and exposure condition combination is within the SAR limit (SAR_{1g} 1.6 W/kg), the simultaneous transmission SAR is not required. When the sum of SAR_{1g} is greater than the SAR limit (SAR_{1g} 1.6 W/kg), SAR test exclusion is determined by the SPLSR.

No.	Conditions (SAR1 + SAR2)	Exposure Condition	Test Position	Max. SAR1	Max. SAR2	SAR Summation	SPLSR Analysis
1	GSM850 + WLAN (DTS)	Head	Right Cheek	0.14	1.16	1.30	Σ SAR < 1.6, Not required
			Right Tilted	0.07	0.93	1.00	Σ SAR < 1.6, Not required
			Left Cheek	0.15	0.46	0.61	Σ SAR < 1.6, Not required
			Left Tilted	0.06	0.48	0.54	Σ SAR < 1.6, Not required
		Body-Worn	Front Face	0.79	0.31	1.10	Σ SAR < 1.6, Not required
			Rear Face	0.74	0.38	1.12	Σ SAR < 1.6, Not required
		Hotspot	Front Face	0.79	0.31	1.10	Σ SAR < 1.6, Not required
			Rear Face	0.74	0.38	1.12	Σ SAR < 1.6, Not required
			Left Side	0.09	0.17	0.26	Σ SAR < 1.6, Not required
			Right Side	0.33	0.00	0.33	Σ SAR < 1.6, Not required
			Top Side	0.00	0.23	0.23	Σ SAR < 1.6, Not required
			Bottom Side	0.40	0.00	0.40	Σ SAR < 1.6, Not required
2	GSM850 + WLAN (NII)	Head	Right Cheek	0.14	1.18	1.32	Σ SAR < 1.6, Not required
			Right Tilted	0.07	1.14	1.21	Σ SAR < 1.6, Not required
			Left Cheek	0.15	0.83	0.98	Σ SAR < 1.6, Not required
			Left Tilted	0.06	1.06	1.12	Σ SAR < 1.6, Not required
		Body-Worn	Front Face	0.79	0.59	**1.38**	Σ SAR < 1.6, Not required
			Rear Face	0.74	0.42	1.16	Σ SAR < 1.6, Not required
		Hotspot	Front Face	0.79	0.36	1.15	Σ SAR < 1.6, Not required
			Rear Face	0.74	0.35	1.09	Σ SAR < 1.6, Not required
			Left Side	0.09	0.15	0.24	Σ SAR < 1.6, Not required
			Right Side	0.33	0.00	0.33	Σ SAR < 1.6, Not required
			Top Side	0.00	0.24	0.24	Σ SAR < 1.6, Not required
			Bottom Side	0.40	0.00	0.40	Σ SAR < 1.6, Not required
3	GSM850 + BT (DSS)	Body-Worn	Front Face	0.79	0.02	0.81	Σ SAR < 1.6, Not required
			Rear Face	0.74	0.03	0.77	Σ SAR < 1.6, Not required

No.	Conditions (SAR1 + SAR2)	Exposure Condition	Test Position	Max. SAR1	Max. SAR2	SAR Summation	SPLSR Analysis
4	GSM1900 + WLAN (DTS)	Head	Right Cheek	0.00	1.16	1.16	Σ SAR < 1.6, Not required
			Right Tilted	0.00	0.93	0.93	Σ SAR < 1.6, Not required
			Left Cheek	0.02	0.46	0.48	Σ SAR < 1.6, Not required
			Left Tilted	0.00	0.48	0.48	Σ SAR < 1.6, Not required
		Body-Worn	Front Face	0.55	0.31	0.86	Σ SAR < 1.6, Not required
			Rear Face	0.38	0.38	0.76	Σ SAR < 1.6, Not required
		Hotspot	Front Face	0.55	0.31	0.86	Σ SAR < 1.6, Not required
			Rear Face	0.38	0.38	0.76	Σ SAR < 1.6, Not required
			Left Side	0.00	0.17	0.17	Σ SAR < 1.6, Not required
			Right Side	0.04	0.00	0.04	Σ SAR < 1.6, Not required
			Top Side	0.00	0.23	0.23	Σ SAR < 1.6, Not required
			Bottom Side	0.65	0.00	0.65	Σ SAR < 1.6, Not required
5	GSM1900 + WLAN (NII)	Head	Right Cheek	0.00	1.18	1.18	Σ SAR < 1.6, Not required
			Right Tilted	0.00	1.14	1.14	Σ SAR < 1.6, Not required
			Left Cheek	0.02	0.83	0.85	Σ SAR < 1.6, Not required
			Left Tilted	0.00	1.06	1.06	Σ SAR < 1.6, Not required
		Body-Worn	Front Face	0.55	0.59	1.14	Σ SAR < 1.6, Not required
			Rear Face	0.38	0.42	0.80	Σ SAR < 1.6, Not required
		Hotspot	Front Face	0.55	0.36	0.91	Σ SAR < 1.6, Not required
			Rear Face	0.38	0.35	0.73	Σ SAR < 1.6, Not required
			Left Side	0.00	0.15	0.15	Σ SAR < 1.6, Not required
			Right Side	0.04	0.00	0.04	Σ SAR < 1.6, Not required
			Top Side	0.00	0.24	0.24	Σ SAR < 1.6, Not required
			Bottom Side	0.65	0.00	0.65	Σ SAR < 1.6, Not required
6	GSM1900 + BT (DSS)	Body-Worn	Front Face	0.55	0.02	0.57	Σ SAR < 1.6, Not required
			Rear Face	0.38	0.03	0.41	Σ SAR < 1.6, Not required

No.	Conditions (SAR1 + SAR2)	Exposure Condition	Test Position	Max. SAR1	Max. SAR2	SAR Summation	SPLSR Analysis
7	WCDMA II + WLAN (DTS)	Head	Right Cheek	0.00	1.16	1.16	Σ SAR < 1.6, Not required
			Right Tilted	0.00	0.93	0.93	Σ SAR < 1.6, Not required
			Left Cheek	0.03	0.46	0.49	Σ SAR < 1.6, Not required
			Left Tilted	0.00	0.48	0.48	Σ SAR < 1.6, Not required
		Body-Worn	Front Face	0.63	0.31	0.94	Σ SAR < 1.6, Not required
			Rear Face	0.40	0.38	0.78	Σ SAR < 1.6, Not required
		Hotspot	Front Face	0.63	0.31	0.94	Σ SAR < 1.6, Not required
			Rear Face	0.40	0.38	0.78	Σ SAR < 1.6, Not required
			Left Side	0.00	0.17	0.17	Σ SAR < 1.6, Not required
			Right Side	0.04	0.00	0.04	Σ SAR < 1.6, Not required
			Top Side	0.00	0.23	0.23	Σ SAR < 1.6, Not required
			Bottom Side	0.75	0.00	0.75	Σ SAR < 1.6, Not required
8	WCDMA II + WLAN (NII)	Head	Right Cheek	0.00	1.18	1.18	Σ SAR < 1.6, Not required
			Right Tilted	0.00	1.14	1.14	Σ SAR < 1.6, Not required
			Left Cheek	0.03	0.83	0.86	Σ SAR < 1.6, Not required
			Left Tilted	0.00	1.06	1.06	Σ SAR < 1.6, Not required
		Body-Worn	Front Face	0.63	0.59	1.22	Σ SAR < 1.6, Not required
			Rear Face	0.40	0.42	0.82	Σ SAR < 1.6, Not required
		Hotspot	Front Face	0.63	0.36	0.99	Σ SAR < 1.6, Not required
			Rear Face	0.40	0.35	0.75	Σ SAR < 1.6, Not required
			Left Side	0.00	0.15	0.15	Σ SAR < 1.6, Not required
			Right Side	0.04	0.00	0.04	Σ SAR < 1.6, Not required
			Top Side	0.00	0.24	0.24	Σ SAR < 1.6, Not required
			Bottom Side	0.75	0.00	0.75	Σ SAR < 1.6, Not required
9	WCDMA II + BT (DSS)	Body-Worn	Front Face	0.63	0.02	0.65	Σ SAR < 1.6, Not required
			Rear Face	0.40	0.03	0.43	Σ SAR < 1.6, Not required

No.	Conditions (SAR1 + SAR2)	Exposure Condition	Test Position	Max. SAR1	Max. SAR2	SAR Summation	SPLSR Analysis
10	WCDMA IV + WLAN (DTS)	Head	Right Cheek	0.00	1.16	1.16	Σ SAR < 1.6, Not required
			Right Tilted	0.00	0.93	0.93	Σ SAR < 1.6, Not required
			Left Cheek	0.05	0.46	0.51	Σ SAR < 1.6, Not required
			Left Tilted	0.00	0.48	0.48	Σ SAR < 1.6, Not required
		Body-Worn	Front Face	0.49	0.31	0.80	Σ SAR < 1.6, Not required
			Rear Face	0.48	0.38	0.86	Σ SAR < 1.6, Not required
		Hotspot	Front Face	0.49	0.31	0.80	Σ SAR < 1.6, Not required
			Rear Face	0.48	0.38	0.86	Σ SAR < 1.6, Not required
			Left Side	0.07	0.17	0.24	Σ SAR < 1.6, Not required
			Right Side	0.22	0.00	0.22	Σ SAR < 1.6, Not required
			Top Side	0.00	0.23	0.23	Σ SAR < 1.6, Not required
			Bottom Side	0.54	0.00	0.54	Σ SAR < 1.6, Not required
11	WCDMA IV + WLAN (NII)	Head	Right Cheek	0.00	1.18	1.18	Σ SAR < 1.6, Not required
			Right Tilted	0.00	1.14	1.14	Σ SAR < 1.6, Not required
			Left Cheek	0.05	0.83	0.88	Σ SAR < 1.6, Not required
			Left Tilted	0.00	1.06	1.06	Σ SAR < 1.6, Not required
		Body-Worn	Front Face	0.49	0.59	1.08	Σ SAR < 1.6, Not required
			Rear Face	0.48	0.42	0.90	Σ SAR < 1.6, Not required
		Hotspot	Front Face	0.49	0.36	0.85	Σ SAR < 1.6, Not required
			Rear Face	0.48	0.35	0.83	Σ SAR < 1.6, Not required
			Left Side	0.07	0.15	0.22	Σ SAR < 1.6, Not required
			Right Side	0.22	0.00	0.22	Σ SAR < 1.6, Not required
			Top Side	0.00	0.24	0.24	Σ SAR < 1.6, Not required
			Bottom Side	0.54	0.00	0.54	Σ SAR < 1.6, Not required
12	WCDMA IV + BT (DSS)	Body-Worn	Front Face	0.49	0.02	0.51	Σ SAR < 1.6, Not required
			Rear Face	0.48	0.03	0.51	Σ SAR < 1.6, Not required

No.	Conditions (SAR1 + SAR2)	Exposure Condition	Test Position	Max. SAR1	Max. SAR2	SAR Summation	SPLSR Analysis
13	WCDMA V + WLAN (DTS)	Head	Right Cheek	0.18	1.16	1.34	Σ SAR < 1.6, Not required
			Right Tilted	0.12	0.93	1.05	Σ SAR < 1.6, Not required
			Left Cheek	0.07	0.46	0.53	Σ SAR < 1.6, Not required
			Left Tilted	0.05	0.48	0.53	Σ SAR < 1.6, Not required
		Body-Worn	Front Face	0.46	0.31	0.77	Σ SAR < 1.6, Not required
			Rear Face	0.49	0.38	0.87	Σ SAR < 1.6, Not required
		Hotspot	Front Face	0.46	0.31	0.77	Σ SAR < 1.6, Not required
			Rear Face	0.49	0.38	0.87	Σ SAR < 1.6, Not required
			Left Side	0.08	0.17	0.25	Σ SAR < 1.6, Not required
			Right Side	0.24	0.00	0.24	Σ SAR < 1.6, Not required
			Top Side	0.00	0.23	0.23	Σ SAR < 1.6, Not required
			Bottom Side	0.34	0.00	0.34	Σ SAR < 1.6, Not required
14	WCDMA V + WLAN (NII)	Head	Right Cheek	0.18	1.18	**1.36**	Σ SAR < 1.6, Not required
			Right Tilted	0.12	1.14	1.26	Σ SAR < 1.6, Not required
			Left Cheek	0.07	0.83	0.9	Σ SAR < 1.6, Not required
			Left Tilted	0.05	1.06	1.11	Σ SAR < 1.6, Not required
		Body-Worn	Front Face	0.46	0.59	1.05	Σ SAR < 1.6, Not required
			Rear Face	0.49	0.42	0.91	Σ SAR < 1.6, Not required
		Hotspot	Front Face	0.46	0.36	0.82	Σ SAR < 1.6, Not required
			Rear Face	0.49	0.35	0.84	Σ SAR < 1.6, Not required
			Left Side	0.08	0.15	0.23	Σ SAR < 1.6, Not required
			Right Side	0.24	0.00	0.24	Σ SAR < 1.6, Not required
			Top Side	0.00	0.24	0.24	Σ SAR < 1.6, Not required
			Bottom Side	0.34	0.00	0.34	Σ SAR < 1.6, Not required
15	WCDMA V + BT (DSS)	Body-Worn	Front Face	0.46	0.02	0.48	Σ SAR < 1.6, Not required
			Rear Face	0.49	0.03	0.52	Σ SAR < 1.6, Not required

No.	Conditions (SAR1 + SAR2)	Exposure Condition	Test Position	Max. SAR1	Max. SAR2	SAR Summation	SPLSR Analysis
16	LTE 2 + WLAN (DTS)	Head	Right Cheek	0.00	1.16	1.16	Σ SAR < 1.6, Not required
			Right Tilted	0.00	0.93	0.93	Σ SAR < 1.6, Not required
			Left Cheek	0.02	0.46	0.48	Σ SAR < 1.6, Not required
			Left Tilted	0.01	0.48	0.49	Σ SAR < 1.6, Not required
		Body-Worn	Front Face	0.59	0.31	0.90	Σ SAR < 1.6, Not required
			Rear Face	0.36	0.38	0.74	Σ SAR < 1.6, Not required
		Hotspot	Front Face	0.59	0.31	0.90	Σ SAR < 1.6, Not required
			Rear Face	0.36	0.38	0.74	Σ SAR < 1.6, Not required
			Left Side	0.00	0.17	0.17	Σ SAR < 1.6, Not required
			Right Side	0.04	0.00	0.04	Σ SAR < 1.6, Not required
			Top Side	0.00	0.23	0.23	Σ SAR < 1.6, Not required
			Bottom Side	0.99	0.00	0.99	Σ SAR < 1.6, Not required
17	LTE 2 + WLAN (NII)	Head	Right Cheek	0.00	1.18	1.18	Σ SAR < 1.6, Not required
			Right Tilted	0.00	1.14	1.14	Σ SAR < 1.6, Not required
			Left Cheek	0.02	0.83	0.85	Σ SAR < 1.6, Not required
			Left Tilted	0.01	1.06	1.07	Σ SAR < 1.6, Not required
		Body-Worn	Front Face	0.59	0.59	1.18	Σ SAR < 1.6, Not required
			Rear Face	0.36	0.42	0.78	Σ SAR < 1.6, Not required
		Hotspot	Front Face	0.59	0.36	0.95	Σ SAR < 1.6, Not required
			Rear Face	0.36	0.35	0.71	Σ SAR < 1.6, Not required
			Left Side	0.00	0.15	0.15	Σ SAR < 1.6, Not required
			Right Side	0.04	0.00	0.04	Σ SAR < 1.6, Not required
			Top Side	0.00	0.24	0.24	Σ SAR < 1.6, Not required
			Bottom Side	0.99	0.00	0.99	Σ SAR < 1.6, Not required
18	LTE 2 + BT (DSS)	Body-Worn	Front Face	0.59	0.02	0.61	Σ SAR < 1.6, Not required
			Rear Face	0.36	0.03	0.39	Σ SAR < 1.6, Not required

No.	Conditions (SAR1 + SAR2)	Exposure Condition	Test Position	Max. SAR1	Max. SAR2	SAR Summation	SPLSR Analysis
19	LTE 4 + WLAN (DTS)	Head	Right Cheek	0.03	1.16	1.19	Σ SAR < 1.6, Not required
			Right Tilted	0.00	0.93	0.93	Σ SAR < 1.6, Not required
			Left Cheek	0.05	0.46	0.51	Σ SAR < 1.6, Not required
			Left Tilted	0.00	0.48	0.48	Σ SAR < 1.6, Not required
		Body-Worn	Front Face	0.66	0.31	0.97	Σ SAR < 1.6, Not required
			Rear Face	0.48	0.38	0.86	Σ SAR < 1.6, Not required
		Hotspot	Front Face	0.66	0.31	0.97	Σ SAR < 1.6, Not required
			Rear Face	0.48	0.38	0.86	Σ SAR < 1.6, Not required
			Left Side	0.03	0.17	0.20	Σ SAR < 1.6, Not required
			Right Side	0.04	0.00	0.04	Σ SAR < 1.6, Not required
			Top Side	0.00	0.23	0.23	Σ SAR < 1.6, Not required
			Bottom Side	0.73	0.00	0.73	Σ SAR < 1.6, Not required
20	LTE 4 + WLAN (NII)	Head	Right Cheek	0.03	1.18	1.21	Σ SAR < 1.6, Not required
			Right Tilted	0.00	1.14	1.14	Σ SAR < 1.6, Not required
			Left Cheek	0.05	0.83	0.88	Σ SAR < 1.6, Not required
			Left Tilted	0.00	1.06	1.06	Σ SAR < 1.6, Not required
		Body-Worn	Front Face	0.66	0.59	1.25	Σ SAR < 1.6, Not required
			Rear Face	0.48	0.42	0.90	Σ SAR < 1.6, Not required
		Hotspot	Front Face	0.66	0.36	1.02	Σ SAR < 1.6, Not required
			Rear Face	0.48	0.35	0.83	Σ SAR < 1.6, Not required
			Left Side	0.03	0.15	0.18	Σ SAR < 1.6, Not required
			Right Side	0.04	0.00	0.04	Σ SAR < 1.6, Not required
			Top Side	0.00	0.24	0.24	Σ SAR < 1.6, Not required
			Bottom Side	0.73	0.00	0.73	Σ SAR < 1.6, Not required
21	LTE 4 + BT (DSS)	Body-Worn	Front Face	0.66	0.02	0.68	Σ SAR < 1.6, Not required
			Rear Face	0.48	0.03	0.51	Σ SAR < 1.6, Not required

No.	Conditions (SAR1 + SAR2)	Exposure Condition	Test Position	Max. SAR1	Max. SAR2	SAR Summation	SPLSR Analysis
22	LTE 5 + WLAN (DTS)	Head	Right Cheek	0.18	1.16	1.34	Σ SAR < 1.6, Not required
			Right Tilted	0.06	0.93	0.99	Σ SAR < 1.6, Not required
			Left Cheek	0.10	0.46	0.56	Σ SAR < 1.6, Not required
			Left Tilted	0.06	0.48	0.54	Σ SAR < 1.6, Not required
		Body-Worn	Front Face	0.49	0.31	0.80	Σ SAR < 1.6, Not required
			Rear Face	0.50	0.38	0.88	Σ SAR < 1.6, Not required
		Hotspot	Front Face	0.49	0.31	0.80	Σ SAR < 1.6, Not required
			Rear Face	0.50	0.38	0.88	Σ SAR < 1.6, Not required
			Left Side	0.06	0.17	0.23	Σ SAR < 1.6, Not required
			Right Side	0.24	0.00	0.24	Σ SAR < 1.6, Not required
			Top Side	0.00	0.23	0.23	Σ SAR < 1.6, Not required
			Bottom Side	0.34	0.00	0.34	Σ SAR < 1.6, Not required
23	LTE 5 + WLAN (NII)	Head	Right Cheek	0.18	1.18	**1.36**	Σ SAR < 1.6, Not required
			Right Tilted	0.06	1.14	1.20	Σ SAR < 1.6, Not required
			Left Cheek	0.10	0.83	0.93	Σ SAR < 1.6, Not required
			Left Tilted	0.06	1.06	1.12	Σ SAR < 1.6, Not required
		Body-Worn	Front Face	0.49	0.59	1.08	Σ SAR < 1.6, Not required
			Rear Face	0.50	0.42	0.92	Σ SAR < 1.6, Not required
		Hotspot	Front Face	0.49	0.36	0.85	Σ SAR < 1.6, Not required
			Rear Face	0.50	0.35	0.85	Σ SAR < 1.6, Not required
			Left Side	0.06	0.15	0.21	Σ SAR < 1.6, Not required
			Right Side	0.24	0.00	0.24	Σ SAR < 1.6, Not required
			Top Side	0.00	0.24	0.24	Σ SAR < 1.6, Not required
			Bottom Side	0.34	0.00	0.34	Σ SAR < 1.6, Not required
24	LTE 5 + BT (DSS)	Body-Worn	Front Face	0.49	0.02	0.51	Σ SAR < 1.6, Not required
			Rear Face	0.50	0.03	0.53	Σ SAR < 1.6, Not required

No.	Conditions (SAR1 + SAR2)	Exposure Condition	Test Position	Max. SAR1	Max. SAR2	SAR Summation	SPLSR Analysis
25	LTE 7 + WLAN (DTS)	Head	Right Cheek	0.06	1.16	1.22	Σ SAR < 1.6, Not required
			Right Tilted	0.03	0.93	0.96	Σ SAR < 1.6, Not required
			Left Cheek	0.08	0.46	0.54	Σ SAR < 1.6, Not required
			Left Tilted	0.03	0.48	0.51	Σ SAR < 1.6, Not required
		Body-Worn	Front Face	0.44	0.31	0.75	Σ SAR < 1.6, Not required
			Rear Face	0.63	0.38	1.01	Σ SAR < 1.6, Not required
		Hotspot	Front Face	0.44	0.31	0.75	Σ SAR < 1.6, Not required
			Rear Face	0.63	0.38	1.01	Σ SAR < 1.6, Not required
			Left Side	0.30	0.17	0.47	Σ SAR < 1.6, Not required
			Right Side	0.13	0.00	0.13	Σ SAR < 1.6, Not required
			Top Side	0.00	0.23	0.23	Σ SAR < 1.6, Not required
			Bottom Side	1.19	0.00	1.19	Σ SAR < 1.6, Not required
26	LTE 7 + WLAN (NII)	Head	Right Cheek	0.06	1.18	1.24	Σ SAR < 1.6, Not required
			Right Tilted	0.03	1.14	1.17	Σ SAR < 1.6, Not required
			Left Cheek	0.08	0.83	0.91	Σ SAR < 1.6, Not required
			Left Tilted	0.03	1.06	1.09	Σ SAR < 1.6, Not required
		Body-Worn	Front Face	0.44	0.59	1.03	Σ SAR < 1.6, Not required
			Rear Face	0.63	0.42	1.05	Σ SAR < 1.6, Not required
		Hotspot	Front Face	0.44	0.36	0.80	Σ SAR < 1.6, Not required
			Rear Face	0.63	0.35	0.98	Σ SAR < 1.6, Not required
			Left Side	0.30	0.15	0.45	Σ SAR < 1.6, Not required
			Right Side	0.13	0.00	0.13	Σ SAR < 1.6, Not required
			Top Side	0.00	0.24	0.24	Σ SAR < 1.6, Not required
			Bottom Side	1.19	0.00	**1.19**	Σ SAR < 1.6, Not required
27	LTE 7 + BT (DSS)	Body-Worn	Front Face	0.44	0.02	0.46	Σ SAR < 1.6, Not required
			Rear Face	0.63	0.03	0.66	Σ SAR < 1.6, Not required

No.	Conditions (SAR1 + SAR2)	Exposure Condition	Test Position	Max. SAR1	Max. SAR2	SAR Summation	SPLSR Analysis
28	LTE 12 + WLAN (DTS)	Head	Right Cheek	0.03	1.16	1.19	Σ SAR < 1.6, Not required
			Right Tilted	0.05	0.93	0.98	Σ SAR < 1.6, Not required
			Left Cheek	0.06	0.46	0.52	Σ SAR < 1.6, Not required
			Left Tilted	0.07	0.48	0.55	Σ SAR < 1.6, Not required
		Body-Worn	Front Face	0.22	0.31	0.53	Σ SAR < 1.6, Not required
			Rear Face	0.20	0.38	0.58	Σ SAR < 1.6, Not required
		Hotspot	Front Face	0.22	0.31	0.53	Σ SAR < 1.6, Not required
			Rear Face	0.20	0.38	0.58	Σ SAR < 1.6, Not required
			Left Side	0.07	0.17	0.24	Σ SAR < 1.6, Not required
			Right Side	0.16	0.00	0.16	Σ SAR < 1.6, Not required
			Top Side	0.00	0.23	0.23	Σ SAR < 1.6, Not required
			Bottom Side	0.15	0.00	0.15	Σ SAR < 1.6, Not required
29	LTE 12 + WLAN (NII)	Head	Right Cheek	0.03	1.18	1.21	Σ SAR < 1.6, Not required
			Right Tilted	0.05	1.14	1.19	Σ SAR < 1.6, Not required
			Left Cheek	0.06	0.83	0.89	Σ SAR < 1.6, Not required
			Left Tilted	0.07	1.06	1.13	Σ SAR < 1.6, Not required
		Body-Worn	Front Face	0.22	0.59	0.81	Σ SAR < 1.6, Not required
			Rear Face	0.20	0.42	0.62	Σ SAR < 1.6, Not required
		Hotspot	Front Face	0.22	0.36	0.58	Σ SAR < 1.6, Not required
			Rear Face	0.20	0.35	0.55	Σ SAR < 1.6, Not required
			Left Side	0.07	0.15	0.22	Σ SAR < 1.6, Not required
			Right Side	0.16	0.00	0.16	Σ SAR < 1.6, Not required
			Top Side	0.00	0.24	0.24	Σ SAR < 1.6, Not required
			Bottom Side	0.15	0.00	0.15	Σ SAR < 1.6, Not required
30	LTE 12 + BT (DSS)	Body-Worn	Front Face	0.22	0.02	0.24	Σ SAR < 1.6, Not required
			Rear Face	0.20	0.03	0.23	Σ SAR < 1.6, Not required

No.	Conditions (SAR1 + SAR2)	Exposure Condition	Test Position	Max. SAR1	Max. SAR2	SAR Summation	SPLSR Analysis
31	LTE 17 + WLAN (DTS)	Head	Right Cheek	0.07	1.16	1.23	Σ SAR < 1.6, Not required
			Right Tilted	0.05	0.93	0.98	Σ SAR < 1.6, Not required
			Left Cheek	0.05	0.46	0.51	Σ SAR < 1.6, Not required
			Left Tilted	0.08	0.48	0.56	Σ SAR < 1.6, Not required
		Body-Worn	Front Face	0.25	0.31	0.56	Σ SAR < 1.6, Not required
			Rear Face	0.23	0.38	0.61	Σ SAR < 1.6, Not required
		Hotspot	Front Face	0.25	0.31	0.56	Σ SAR < 1.6, Not required
			Rear Face	0.23	0.38	0.61	Σ SAR < 1.6, Not required
			Left Side	0.05	0.17	0.22	Σ SAR < 1.6, Not required
			Right Side	0.20	0.00	0.20	Σ SAR < 1.6, Not required
			Top Side	0.00	0.23	0.23	Σ SAR < 1.6, Not required
			Bottom Side	0.18	0.00	0.18	Σ SAR < 1.6, Not required
32	LTE 17 + WLAN (NII)	Head	Right Cheek	0.07	1.18	1.25	Σ SAR < 1.6, Not required
			Right Tilted	0.05	1.14	1.19	Σ SAR < 1.6, Not required
			Left Cheek	0.05	0.83	0.88	Σ SAR < 1.6, Not required
			Left Tilted	0.08	1.06	1.14	Σ SAR < 1.6, Not required
		Body-Worn	Front Face	0.25	0.59	0.84	Σ SAR < 1.6, Not required
			Rear Face	0.23	0.42	0.65	Σ SAR < 1.6, Not required
		Hotspot	Front Face	0.25	0.36	0.61	Σ SAR < 1.6, Not required
			Rear Face	0.23	0.35	0.58	Σ SAR < 1.6, Not required
			Left Side	0.05	0.15	0.20	Σ SAR < 1.6, Not required
			Right Side	0.20	0.00	0.20	Σ SAR < 1.6, Not required
			Top Side	0.00	0.24	0.24	Σ SAR < 1.6, Not required
			Bottom Side	0.18	0.00	0.18	Σ SAR < 1.6, Not required
33	LTE 17 + BT (DSS)	Body-Worn	Front Face	0.25	0.02	0.27	Σ SAR < 1.6, Not required
			Rear Face	0.23	0.03	0.26	Σ SAR < 1.6, Not required

Test Engineer : Eric Wu and Willy Chang

5. Calibration of Test Equipment

Equipment	Manufacturer	Model	SN	Cal. Date	Cal. Interval
System Validation Dipole	SPEAG	D750V3	1013	Aug. 30, 2016	1 Year
System Validation Dipole	SPEAG	D835V2	4d121	Aug. 25, 2016	1 Year
System Validation Dipole	SPEAG	D1750V2	1055	Aug. 31, 2016	1 Year
System Validation Dipole	SPEAG	D1900V2	5d036	Jan. 23, 2017	1 Year
System Validation Dipole	SPEAG	D2450V2	737	Aug. 26, 2016	1 Year
System Validation Dipole	SPEAG	D2600V2	1020	Aug. 26, 2016	1 Year
System Validation Dipole	SPEAG	D5GHzV2	1019	Aug. 23, 2016	1 Year
Dosimetric E-Field Probe	SPEAG	EX3DV4	3753	May 05, 2017	1 Year
Dosimetric E-Field Probe	SPEAG	EX3DV4	3971	Mar. 24, 2017	1 Year
Dosimetric E-Field Probe	SPEAG	ET3DV6	1790	May. 24, 2017	1 Year
Dosimetric E-Field Probe	SPEAG	ET3DV6	7351	Mar. 20, 2017	1 Year
Data Acquisition Electronics	SPEAG	DAE3	579	Sep. 05, 2016	1 Year
Data Acquisition Electronics	SPEAG	DAE4	861	May. 22, 2017	1 Year
Data Acquisition Electronics	SPEAG	DAE4	1431	Mar. 20, 2017	1 Year
Data Acquisition Electronics	SPEAG	DAE4	916	Dec. 15, 2016	1 Year
Universal Radio Communication Tester	R&S	CMW500	151084	Oct. 18, 2016	1 Year
Spectrum Analyzer	R&S	FSL6	102006	Mar. 27, 2017	1 Year
MXG Analong Signal Generator	Agilent	N5181A	MY50143868	Jul. 07, 2016	1 Year
Vector Signal Generator	Anritsu	MG3710A	6201599977	Mar. 27, 2017	1 Year
Power Meter	Anritsu	ML2495A	1218009	Jul. 06, 2016	1 Year
Power Sensor	Anritsu	MA2411B	1207252	Jul. 06, 2016	1 Year
Thermometer	YFE	YF-160A	130504591	Mar. 24, 2017	1 Year
Power Amplifier	AR	5S1G4	0339656	Sep. 21, 2016	1 Year
Attenuator	MTJ	MTJ6011-03	N/A	Sep. 21, 2016	1 Year
Attenuator	Woken	00800A1G01L-10	N/A	Sep. 21, 2016	1 Year
Directional Coupler	Woken	0110A05602O-10	11122702	Sep. 21, 2016	1 Year
Dielectric Assessment Kit	SPEAG	DAK-3.5	1151	Aug. 25, 2016	1 Year
Twin SAM Phantom	SPEAG	QD 000 P40 CD	1654	N/A	N/A
Twin SAM Phantom	SPEAG	QD 000 P40 CB	1485	N/A	N/A
Twin SAM Phantom	SPEAG	QD 000 P40 CD	1823	N/A	N/A

6. Measurement Uncertainty

Source of Uncertainty	Uncertainty (± %)	Probability Distribution	Divisor	Ci (1g)	Ci (10g)	Standard Uncertainty (± %, 1g)	Standard Uncertainty (± %, 10g)	Vi
Measurement System								
Probe Calibration	6.0	Normal	1	1	1	6.0	6.0	∞
Axial Isotropy	4.7	Rectangular	√3	√0.5	√0.5	1.9	1.9	∞
Hemispherical Isotropy	9.6	Rectangular	√3	√0.5	√0.5	3.9	3.9	∞
Boundary Effect	1.0	Rectangular	√3	1	1	0.6	0.6	∞
Linearity	4.7	Rectangular	√3	1	1	2.7	2.7	∞
Detection Limits	0.25	Rectangular	√3	1	1	0.14	0.14	∞
Probe Modulation Response	3.5	Rectangular	√3	1	1	2.0	2.0	∞
Readout Electronics	0.3	Normal	1	1	1	0.3	0.3	∞
Response Time	0.0	Rectangular	√3	1	1	0.0	0.0	∞
Integration Time	1.7	Rectangular	√3	1	1	1.0	1.0	∞
RF Ambient Conditions – Noise	3.0	Rectangular	√3	1	1	1.7	1.7	∞
RF Ambient Conditions – Reflections	3.0	Rectangular	√3	1	1	1.7	1.7	∞
Probe Positioner Mechanical Tolerance	0.4	Rectangular	√3	1	1	0.2	0.2	∞
Probe Positioning with Respect to Phantom	2.9	Rectangular	√3	1	1	1.7	1.7	∞
Post-processing	2.0	Rectangular	√3	1	1	1.2	1.2	∞
Test Sample Related								
Test Sample Positioning	3.9 / 2.06	Normal	1	1	1	3.9	2.1	35
Device Holder Uncertainty	2.9 / 4.1	Normal	1	1	1	2.9	4.1	11
Power Drift of Measurement	5.0	Rectangular	√3	1	1	2.9	2.9	∞
Power Scaling	0.0	Rectangular	√3	1	1	0.0	0.0	∞
Phantom and Setup								
Phantom Uncertainty (Shape and Thickness Tolerances)	6.1	Rectangular	√3	1	1	3.5	3.5	∞
Liquid Conductivity (Temperature Uncertainty)	3.24	Rectangular	√3	0.78	0.71	1.5	1.3	∞
Liquid Conductivity (Measured)	2.88	Normal	1	0.78	0.71	2.2	2.0	43
Liquid Permittivity (Temperature Uncertainty)	1.13	Rectangular	√3	0.23	0.26	0.2	0.2	∞
Liquid Permittivity (Measured)	2.50	Normal	1	0.23	0.26	0.6	0.7	54
Combined Standard Uncertainty						± 11.4 %	± 11.2 %	
Expanded Uncertainty (K=2)						**± 22.8 %**	**± 22.4 %**	

Head SAR Uncertainty Budget for Frequency Range of 300 MHz to 3 GHz

Source of Uncertainty	Uncertainty (± %)	Probability Distribution	Divisor	Ci (1g)	Ci (10g)	Standard Uncertainty (± %, 1g)	Standard Uncertainty (± %, 10g)	Vi
Measurement System								
Probe Calibration	6.55	Normal	1	1	1	6.55	6.55	∞
Axial Isotropy	4.7	Rectangular	√3	0.7	0.7	1.9	1.9	∞
Hemispherical Isotropy	9.6	Rectangular	√3	0.7	0.7	3.9	3.9	∞
Boundary Effect	2.0	Rectangular	√3	1	1	1.2	1.2	∞
Linearity	4.7	Rectangular	√3	1	1	2.7	2.7	∞
Detection Limits	0.25	Rectangular	√3	1	1	0.14	0.14	∞
Probe Modulation Response	3.5	Rectangular	√3	1	1	2.0	2.0	∞
Readout Electronics	0.3	Normal	1	1	1	0.3	0.3	∞
Response Time	0.0	Rectangular	√3	1	1	0.0	0.0	∞
Integration Time	1.7	Rectangular	√3	1	1	1.0	1.0	∞
RF Ambient Conditions – Noise	3.0	Rectangular	√3	1	1	1.7	1.7	∞
RF Ambient Conditions – Reflections	3.0	Rectangular	√3	1	1	1.7	1.7	∞
Probe Positioner Mechanical Tolerance	0.4	Rectangular	√3	1	1	0.2	0.2	∞
Probe Positioning with Respect to Phantom	6.7	Rectangular	√3	1	1	3.9	3.9	∞
Post-processing	4.0	Rectangular	√3	1	1	2.3	2.3	∞
Test Sample Related								
Test Sample Positioning	3.9 / 2.06	Normal	1	1	1	3.9	2.1	35
Device Holder Uncertainty	2.9 / 4.1	Normal	1	1	1	2.9	4.1	11
Power Drift of Measurement	5.0	Rectangular	√3	1	1	2.9	2.9	∞
Power Scaling	0.0	Rectangular	√3	1	1	0.0	0.0	∞
Phantom and Setup								
Phantom Uncertainty (Shape and Thickness Tolerances)	6.6	Rectangular	√3	1	1	3.8	3.8	∞
Liquid Conductivity (Temperature Uncertainty)	3.24	Rectangular	√3	0.78	0.71	1.5	1.3	∞
Liquid Conductivity (Measured)	2.88	Normal	1	0.78	0.71	2.2	2.0	43
Liquid Permittivity (Temperature Uncertainty)	1.13	Rectangular	√3	0.23	0.26	0.2	0.2	∞
Liquid Permittivity (Measured)	2.50	Normal	1	0.23	0.26	0.6	0.7	54
Combined Standard Uncertainty						± 12.5 %	± 12.3 %	
Expanded Uncertainty (K=2)						**± 25.0 %**	**± 24.6 %**	

Head SAR Uncertainty Budget for Frequency Range of 3 GHz to 6 GHz

Source of Uncertainty	Uncertainty (± %)	Probability Distribution	Divisor	Ci (1g)	Ci (10g)	Standard Uncertainty (± %, 1g)	Standard Uncertainty (± %, 10g)	Vi
Measurement System								
Probe Calibration	6.0	Normal	1	1	1	6.0	6.0	∞
Axial Isotropy	4.7	Rectangular	√3	√0.5	√0.5	1.9	1.9	∞
Hemispherical Isotropy	9.6	Rectangular	√3	√0.5	√0.5	3.9	3.9	∞
Boundary Effect	1.0	Rectangular	√3	1	1	0.6	0.6	∞
Linearity	4.7	Rectangular	√3	1	1	2.7	2.7	∞
Detection Limits	0.25	Rectangular	√3	1	1	0.14	0.14	∞
Probe Modulation Response	3.5	Rectangular	√3	1	1	2.0	2.0	∞
Readout Electronics	0.3	Normal	1	1	1	0.3	0.3	∞
Response Time	0.0	Rectangular	√3	1	1	0.0	0.0	∞
Integration Time	1.7	Rectangular	√3	1	1	1.0	1.0	∞
RF Ambient Conditions – Noise	3.0	Rectangular	√3	1	1	1.7	1.7	∞
RF Ambient Conditions – Reflections	3.0	Rectangular	√3	1	1	1.7	1.7	∞
Probe Positioner Mechanical Tolerance	0.4	Rectangular	√3	1	1	0.2	0.2	∞
Probe Positioning with Respect to Phantom	2.9	Rectangular	√3	1	1	1.7	1.7	∞
Post-processing	2.0	Rectangular	√3	1	1	1.2	1.2	∞
Test Sample Related								
Test Sample Positioning	4.38 / 1.35	Normal	1	1	1	4.4	1.4	29
Device Holder Uncertainty	2.9 / 4.1	Normal	1	1	1	2.9	4.1	11
Power Drift of Measurement	5.0	Rectangular	√3	1	1	2.9	2.9	∞
Power Scaling	0.0	Rectangular	√3	1	1	0.0	0.0	∞
Phantom and Setup								
Phantom Uncertainty (Shape and Thickness Tolerances)	7.2	Rectangular	√3	1	1	4.2	4.2	∞
Liquid Conductivity (Temperature Uncertainty)	3.24	Rectangular	√3	0.78	0.71	1.5	1.3	∞
Liquid Conductivity (Measured)	2.88	Normal	1	0.78	0.71	2.2	2.0	43
Liquid Permittivity (Temperature Uncertainty)	1.13	Rectangular	√3	0.23	0.26	0.2	0.2	∞
Liquid Permittivity (Measured)	2.50	Normal	1	0.23	0.26	0.6	0.7	54
Combined Standard Uncertainty						± 11.8 %	± 11.3 %	
Expanded Uncertainty (K=2)						**± 23.6 %**	**± 22.6 %**	

Body SAR Uncertainty Budget for Frequency Range of 300 MHz to 3 GHz

Source of Uncertainty	Uncertainty (± %)	Probability Distribution	Divisor	Ci (1g)	Ci (10g)	Standard Uncertainty (± %, 1g)	Standard Uncertainty (± %, 10g)	Vi
Measurement System								
Probe Calibration	6.55	Normal	1	1	1	6.55	6.55	∞
Axial Isotropy	4.7	Rectangular	√3	0.7	0.7	1.9	1.9	∞
Hemispherical Isotropy	9.6	Rectangular	√3	0.7	0.7	3.9	3.9	∞
Boundary Effect	2.0	Rectangular	√3	1	1	1.2	1.2	∞
Linearity	4.7	Rectangular	√3	1	1	2.7	2.7	∞
Detection Limits	0.25	Rectangular	√3	1	1	0.14	0.14	∞
Probe Modulation Response	3.5	Rectangular	√3	1	1	2.0	2.0	∞
Readout Electronics	0.3	Normal	1	1	1	0.3	0.3	∞
Response Time	0.0	Rectangular	√3	1	1	0.0	0.0	∞
Integration Time	1.7	Rectangular	√3	1	1	1.0	1.0	∞
RF Ambient Conditions – Noise	3.0	Rectangular	√3	1	1	1.7	1.7	∞
RF Ambient Conditions – Reflections	3.0	Rectangular	√3	1	1	1.7	1.7	∞
Probe Positioner Mechanical Tolerance	0.4	Rectangular	√3	1	1	0.2	0.2	∞
Probe Positioning with Respect to Phantom	6.7	Rectangular	√3	1	1	3.9	3.9	∞
Post-processing	4.0	Rectangular	√3	1	1	2.3	2.3	∞
Test Sample Related								
Test Sample Positioning	4.38 / 1.35	Normal	1	1	1	4.4	1.4	29
Device Holder Uncertainty	2.9 / 4.1	Normal	1	1	1	2.9	4.1	11
Power Drift of Measurement	5.0	Rectangular	√3	1	1	2.9	2.9	∞
Power Scaling	0.0	Rectangular	√3	1	1	0.0	0.0	∞
Phantom and Setup								
Phantom Uncertainty (Shape and Thickness Tolerances)	7.6	Rectangular	√3	1	1	4.4	4.4	∞
Liquid Conductivity (Temperature Uncertainty)	3.24	Rectangular	√3	0.78	0.71	1.5	1.3	∞
Liquid Conductivity (Measured)	2.88	Normal	1	0.78	0.71	2.2	2.0	43
Liquid Permittivity (Temperature Uncertainty)	1.13	Rectangular	√3	0.23	0.26	0.2	0.2	∞
Liquid Permittivity (Measured)	2.50	Normal	1	0.23	0.26	0.6	0.7	54
Combined Standard Uncertainty						± 12.8 %	± 12.4 %	
Expanded Uncertainty (K=2)						**± 25.6 %**	**± 24.8 %**	

Body SAR Uncertainty Budget for Frequency Range of 3 GHz to 6 GHz

7. Information on the Testing Laboratories

We, Bureau Veritas Consumer Products Services (H.K.) Ltd., Taoyuan Branch, were founded in 1988 to provide our best service in EMC, Radio, Telecom and Safety consultation. Our laboratories are accredited and approved according to ISO/IEC 17025.

If you have any comments, please feel free to contact us at the following:

Taiwan HwaYa EMC/RF/Safety/Telecom Lab:
Add: No. 19, Hwa Ya 2nd Rd, Wen Hwa Vil., Kwei Shan Hsiang, Taoyuan Hsien 333, Taiwan, R.O.C.
Tel: 886-3-318-3232
Fax: 886-3-327-0892

Taiwan LinKo EMC/RF Lab:
Add: No. 47-2, 14th Ling, Chia Pau Vil., Linkou Dist., New Taipei City 244, Taiwan, R.O.C.
Tel: 886-2-2605-2180
Fax: 886-2-2605-1924

Taiwan HsinChu EMC/RF Lab:
Add: No. 81-1, Lu Liao Keng, 9th Ling, Wu Lung Vil., Chiung Lin Township, Hsinchu County 307, Taiwan, R.O.C.
Tel: 886-3-593-5343
Fax: 886-3-593-5342

Email: service.adt@tw.bureauveritas.com
Web Site: www.adt.com.tw

The road map of all our labs can be found in our web site also.

---END---

Appendix A. SAR Plots of System Verification

The plots for system verification with largest deviation for each SAR system combination are shown as follows.

Test Laboratory: Bureau Veritas ADT SAR/HAC Testing Lab Date: 2017/07/12

System Check_H750_170712

DUT: Dipole 750 MHz; Type: D750V3; SN: 1013

Communication System: CW; Frequency: 750 MHz;Duty Cycle: 1:1
Medium: H06T09N1_0712 Medium parameters used: f = 750 MHz; σ = 0.892 S/m; ε_r = 42.797; ρ = 1000 kg/m^3
Ambient Temperature：23.8 ℃ ; Liquid Temperature：23.3 ℃

DASY5 Configuration:
- Probe: EX3DV4 - SN3753; ConvF(9.42, 9.42, 9.42); Calibrated: 2017/05/05;
- Sensor-Surface: 1.4mm (Mechanical Surface Detection)
- Electronics: DAE4 Sn916; Calibrated: 2016/12/15
- Phantom: Twin SAM Phantom_1485; Type: QD000P40;
- Measurement SW: DASY52, Version 52.8 (8); SEMCAD X Version 14.6.10 (7373)

Pin=250mW/Area Scan (61x81x1): Interpolated grid: dx=1.500 mm, dy=1.500 mm
Maximum value of SAR (interpolated) = 2.73 W/kg

Pin=250mW/Zoom Scan (5x5x7)/Cube 0: Measurement grid: dx=8mm, dy=8mm, dz=5mm
Reference Value = 57.75 V/m; Power Drift = -0.03 dB
Peak SAR (extrapolated) = 3.12 W/kg
SAR(1 g) = 2.01 W/kg; SAR(10 g) = 1.32 W/kg
Maximum value of SAR (measured) = 2.73 W/kg

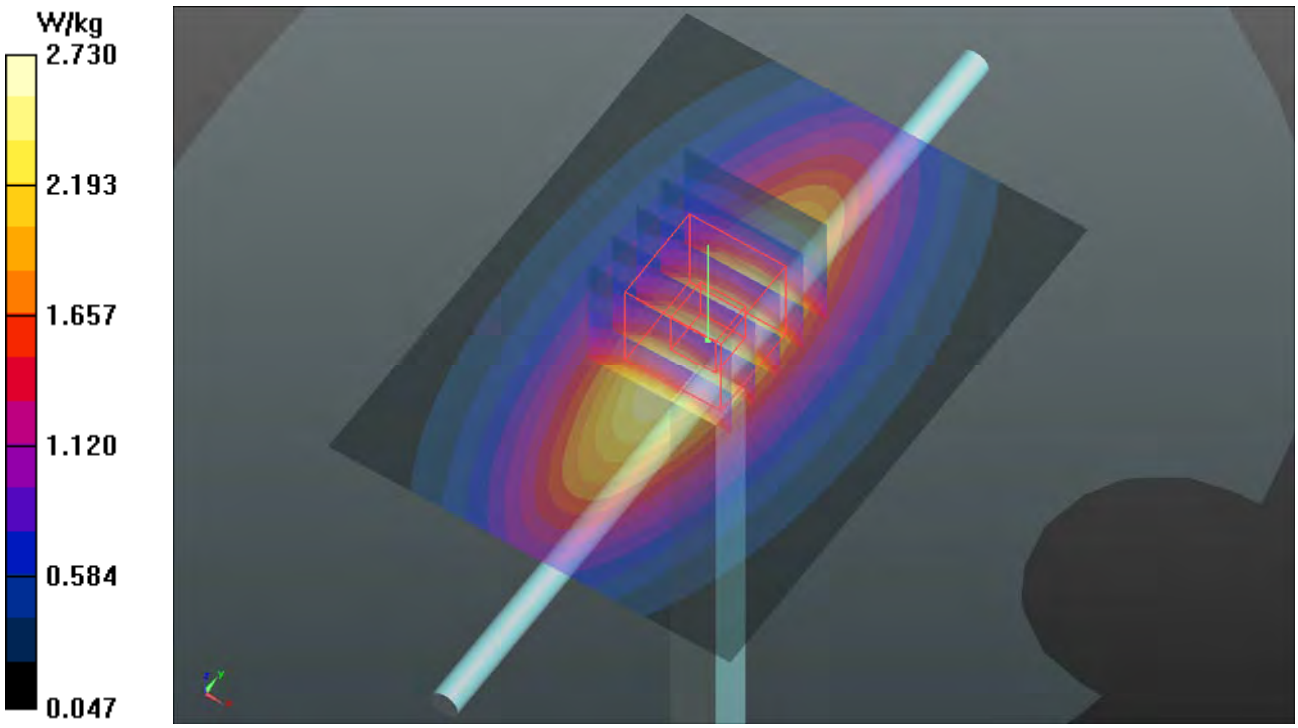

Test Laboratory: Bureau Veritas ADT SAR/HAC Testing Lab Date: 2017/07/12

System Check_H835_170712

DUT: Dipole 835 MHz; Type: D835V2; SN: 4d121

Communication System: CW; Frequency: 835 MHz;Duty Cycle: 1:1
Medium: H07T10N1_0712 Medium parameters used: f = 835 MHz; σ = 0.921 S/m; ε_r = 42.338; ρ = 1000 kg/m^3
Ambient Temperature：23.7 ℃ ; Liquid Temperature：23.3 ℃

DASY5 Configuration:
- Probe: EX3DV4 - SN3753; ConvF(9.13, 9.13, 9.13); Calibrated: 2017/05/05;
- Sensor-Surface: 1.4mm (Mechanical Surface Detection)
- Electronics: DAE4 Sn916; Calibrated: 2016/12/15
- Phantom: Twin SAM Phantom_1485; Type: QD000P40;
- Measurement SW: DASY52, Version 52.8 (8); SEMCAD X Version 14.6.10 (7373)

Pin=250mW/Area Scan (61x61x1): Interpolated grid: dx=1.500 mm, dy=1.500 mm
Maximum value of SAR (interpolated) = 3.06 W/kg

Pin=250mW/Zoom Scan (5x5x7)/Cube 0: Measurement grid: dx=8mm, dy=8mm, dz=5mm
Reference Value = 56.24 V/m; Power Drift = -0.05 dB
Peak SAR (extrapolated) = 3.77 W/kg
SAR(1 g) = 2.47 W/kg; SAR(10 g) = 1.62 W/kg
Maximum value of SAR (measured) = 3.32 W/kg

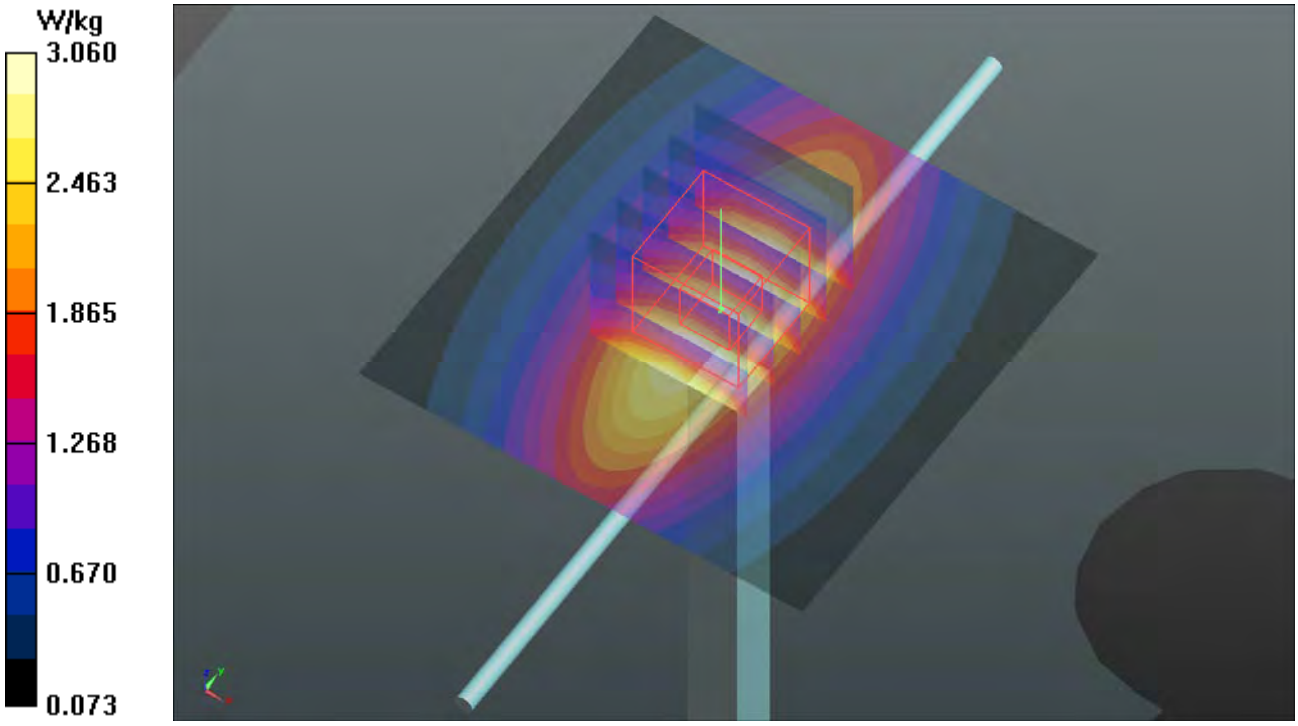

Test Laboratory: Bureau Veritas ADT SAR/HAC Testing Lab Date: 2017/07/12

System Check_H1750_170712

DUT: Dipole 1750 MHz; Type: D1750V2; SN: 1055

Communication System: CW; Frequency: 1750 MHz;Duty Cycle: 1:1
Medium: H16T20N1_0712 Medium parameters used: f = 1750 MHz; σ = 1.328 S/m; ε_r = 40.136; ρ = 1000 kg/m^3
Ambient Temperature：23.8 ℃ ; Liquid Temperature：23.2 ℃

DASY5 Configuration:
- Probe: EX3DV4 - SN3753; ConvF(8.16, 8.16, 8.16); Calibrated: 2017/05/05;
- Sensor-Surface: 1.4mm (Mechanical Surface Detection)
- Electronics: DAE4 Sn916; Calibrated: 2016/12/15
- Phantom: Twin SAM Phantom_1485; Type: QD000P40;
- Measurement SW: DASY52, Version 52.8 (8); SEMCAD X Version 14.6.10 (7373)

Pin=250mW/Area Scan (61x61x1): Interpolated grid: dx=1.500 mm, dy=1.500 mm
Maximum value of SAR (interpolated) = 14.4 W/kg

Pin=250mW/Zoom Scan (5x5x7)/Cube 0: Measurement grid: dx=8mm, dy=8mm, dz=5mm
Reference Value = 101.1 V/m; Power Drift = -0.01 dB
Peak SAR (extrapolated) = 17.0 W/kg
SAR(1 g) = 9.33 W/kg; SAR(10 g) = 4.98 W/kg
Maximum value of SAR (measured) = 14.3 W/kg

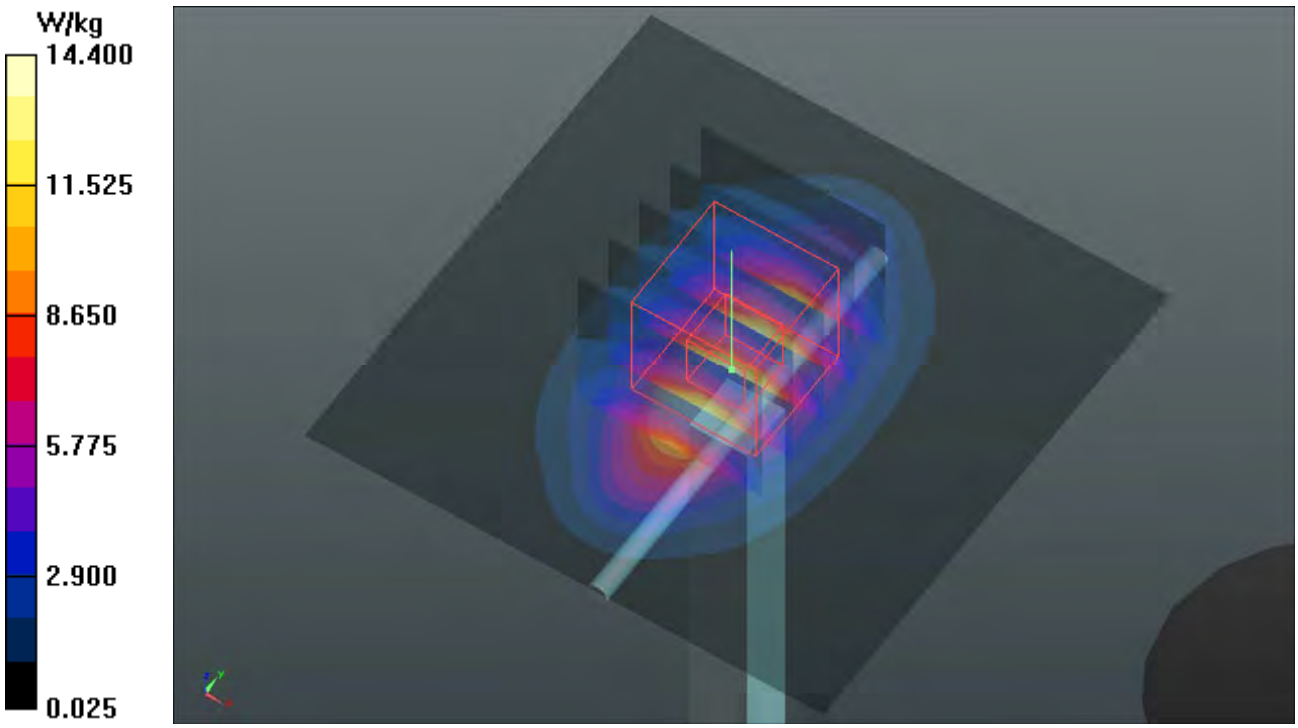

System Check_H1900_170713

DUT: Dipole 1900 MHz; Type: D1900V2; SN: 5d036

Communication System: CW; Frequency: 1900 MHz;Duty Cycle: 1:1
Medium: H16T20N3_0713 Medium parameters used: f = 1900 MHz; σ = 1.458 S/m; ε_r = 39.154; ρ = 1000 kg/m^3
Ambient Temperature：23.9 ℃ ; Liquid Temperature：23.4 ℃

DASY5 Configuration:
- Probe: EX3DV4 - SN7351; ConvF(8.59, 8.59, 8.59); Calibrated: 2016/12/20;
- Sensor-Surface: 2mm (Mechanical Surface Detection)
- Electronics: DAE4 Sn1431; Calibrated: 2017/03/20
- Phantom: Twin SAM Phantom_1822; Type: QD000P40
- Measurement SW: DASY52, Version 52.8 (8); SEMCAD X Version 14.6.10 (7373)

Pin=250mW/Area Scan (61x61x1): Interpolated grid: dx=1.500 mm, dy=1.500 mm
Maximum value of SAR (interpolated) = 14.6 W/kg

Pin=250mW/Zoom Scan (5x5x7)/Cube 0: Measurement grid: dx=8mm, dy=8mm, dz=5mm
Reference Value = 99.97 V/m; Power Drift = 0.02 dB
Peak SAR (extrapolated) = 18.0 W/kg
SAR(1 g) = 9.74 W/kg; SAR(10 g) = 5.04 W/kg
Maximum value of SAR (measured) = 14.0 W/kg

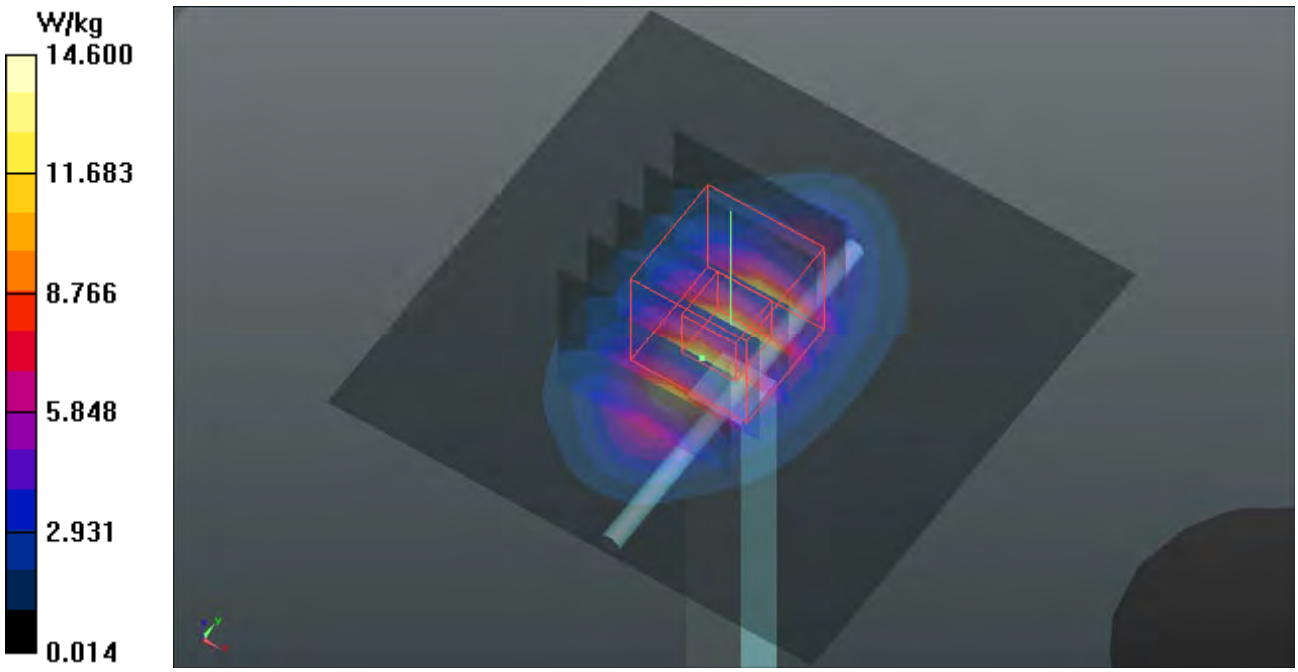

Test Laboratory: Bureau Veritas ADT SAR/HAC Testing Lab Date: 2017/07/13

System Check_H2450_170713

DUT: Dipole 2450 MHz; Type: D2450V2; SN: 737

Communication System: CW; Frequency: 2450 MHz;Duty Cycle: 1:1
Medium: H19T27N3_0713 Medium parameters used: f = 2450 MHz; σ = 1.890 S/m; ε_r = 39.974; ρ = 1000 kg/m^3
Ambient Temperature：23.9 ℃ ; Liquid Temperature：23.4 ℃

DASY5 Configuration:
- Probe: EX3DV4 - SN7351; ConvF(7.64, 7.64, 7.64); Calibrated: 2016/12/20;
- Sensor-Surface: 1.4mm (Mechanical Surface Detection)
- Electronics: DAE4 Sn1431; Calibrated: 2017/03/20
- Phantom: Twin SAM Phantom_1654; Type: QD000P40
- Measurement SW: DASY52, Version 52.8 (8); SEMCAD X Version 14.6.10 (7373)

Pin=250mW/Area Scan (81x81x1): Interpolated grid: dx=1.200 mm, dy=1.200 mm
Maximum value of SAR (interpolated) = 23.6 W/kg

Pin=250mW/Zoom Scan (7x7x7)/Cube 0: Measurement grid: dx=5mm, dy=5mm, dz=5mm
Reference Value = 107.2 V/m; Power Drift = -0.03 dB
Peak SAR (extrapolated) = 30.1 W/kg
SAR(1 g) = 13.7 W/kg; SAR(10 g) = 6.22 W/kg
Maximum value of SAR (measured) = 23.8 W/kg

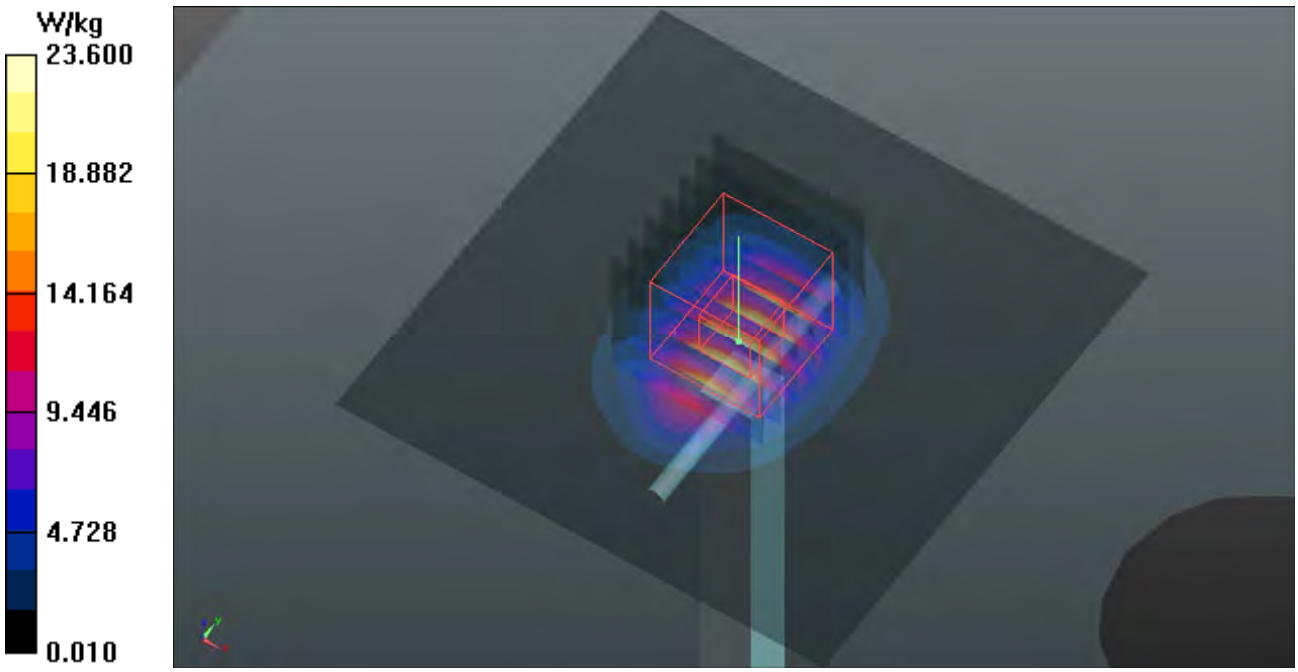

Test Laboratory: Bureau Veritas ADT SAR/HAC Testing Lab Date: 2017/07/13

System Check_H2600_170713

DUT: Dipole 2600 MHz; Type: D2600V2; SN: 1020

Communication System: CW; Frequency: 2600 MHz;Duty Cycle: 1:1
Medium: H19T27N3_0713 Medium parameters used: f = 2600 MHz; σ = 2.056 S/m; ε_r = 39.473; ρ = 1000 kg/m^3
Ambient Temperature：23.9 ℃ ; Liquid Temperature：23.4 ℃

DASY5 Configuration:
- Probe: EX3DV4 - SN7351; ConvF(7.43, 7.43, 7.43); Calibrated: 2016/12/20;
- Sensor-Surface: 1.4mm (Mechanical Surface Detection)
- Electronics: DAE4 Sn1431; Calibrated: 2017/03/20
- Phantom: Twin SAM Phantom_1654; Type: QD000P40
- Measurement SW: DASY52, Version 52.8 (8); SEMCAD X Version 14.6.10 (7373)

Pin=250mW/Area Scan (81x81x1): Interpolated grid: dx=1.200 mm, dy=1.200 mm
Maximum value of SAR (interpolated) = 26.9 W/kg

Pin=250mW/Zoom Scan (7x7x7)/Cube 0: Measurement grid: dx=5mm, dy=5mm, dz=5mm
Reference Value = 119.4 V/m; Power Drift = -0.09 dB
Peak SAR (extrapolated) = 33.6 W/kg
SAR(1 g) = 15.1 W/kg; SAR(10 g) = 6.73 W/kg
Maximum value of SAR (measured) = 26.5 W/kg

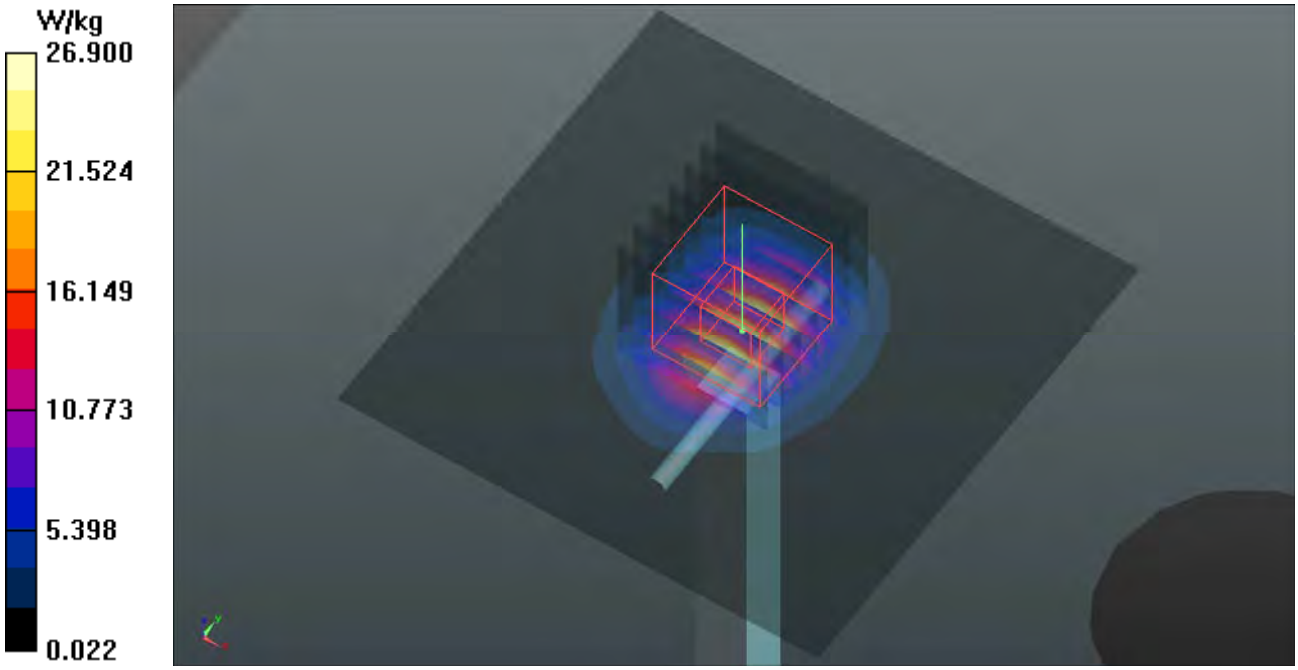

System Check_H5250_170713

DUT: Dipole 5 GHz; Type: D5GHzV2; SN: 1019

Communication System: CW; Frequency: 5250 MHz;Duty Cycle: 1:1
Medium: H34T60N2_0713 Medium parameters used: f = 5250 MHz; σ = 4.631 S/m; ε_r = 34.694; ρ = 1000 kg/m^3
Ambient Temperature：23.8 ℃ ; Liquid Temperature：23.2 ℃

DASY5 Configuration:
- Probe: EX3DV4 - SN3753; ConvF(5.25, 5.25, 5.25); Calibrated: 2017/05/05;
- Sensor-Surface: 1.4mm (Mechanical Surface Detection)
- Electronics: DAE4 Sn916; Calibrated: 2016/12/15
- Phantom: Twin SAM Phantom_1823; Type: QD000P40CD;
- Measurement SW: DASY52, Version 52.8 (8); SEMCAD X Version 14.6.10 (7373)

Pin=100mW/Area Scan (91x91x1): Interpolated grid: dx=1.000 mm, dy=1.000 mm
Maximum value of SAR (interpolated) = 15.1 W/kg

Pin=100mW/Zoom Scan (7x7x12)/Cube 0: Measurement grid: dx=4mm, dy=4mm, dz=2mm
Reference Value = 61.82 V/m; Power Drift = -0.17 dB
Peak SAR (extrapolated) = 33.9 W/kg
SAR(1 g) = 7.76 W/kg; SAR(10 g) = 2.2 W/kg
Maximum value of SAR (measured) = 16.2 W/kg

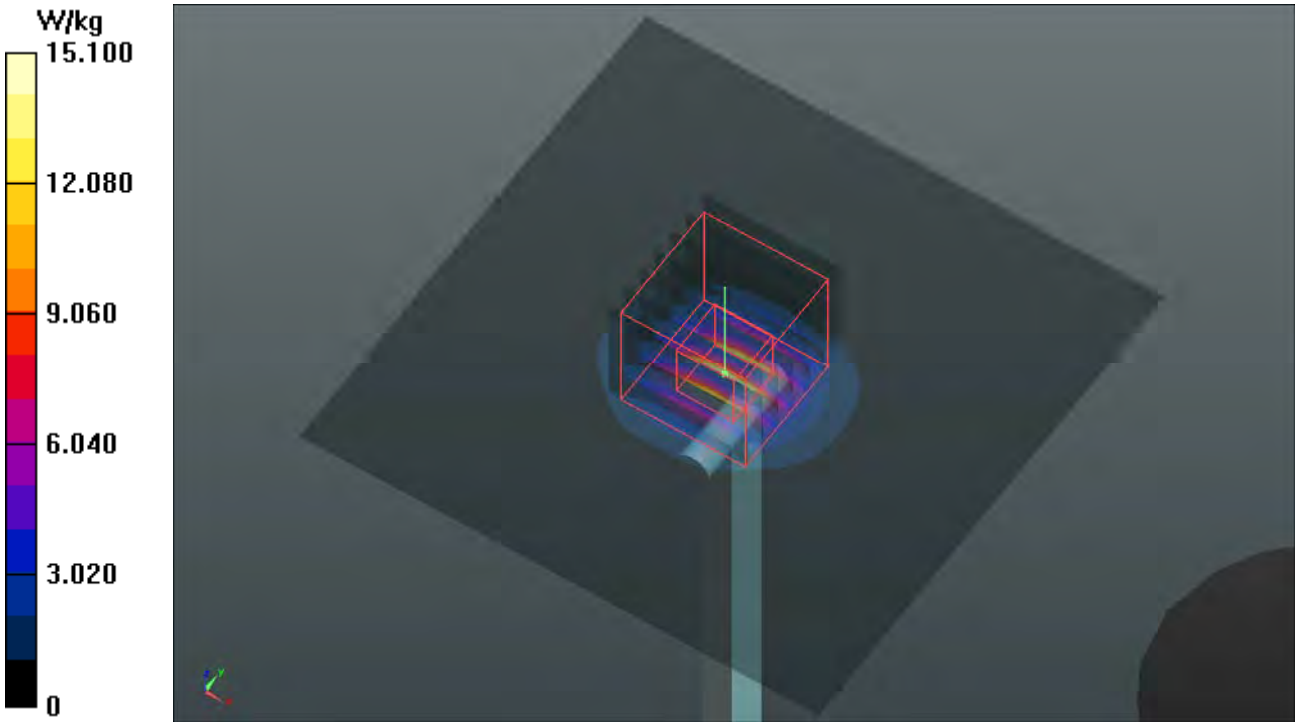

Test Laboratory: Bureau Veritas ADT SAR/HAC Testing Lab Date: 2017/07/13

System Check_H5600_170713

DUT: Dipole 5 GHz; Type: D5GHzV2; SN: 1019

Communication System: CW; Frequency: 5600 MHz;Duty Cycle: 1:1
Medium: H34T60N2_0713 Medium parameters used: f = 5600 MHz; σ = 4.964 S/m; ε_r = 34.172; ρ = 1000 kg/m^3
Ambient Temperature：23.8 ℃ ; Liquid Temperature：23.2 ℃

DASY5 Configuration:
- Probe: EX3DV4 - SN3753; ConvF(4.75, 4.75, 4.75); Calibrated: 2017/05/05;
- Sensor-Surface: 1.4mm (Mechanical Surface Detection)
- Electronics: DAE4 Sn916; Calibrated: 2016/12/15
- Phantom: Twin SAM Phantom_1823; Type: QD000P40CD;
- Measurement SW: DASY52, Version 52.8 (8); SEMCAD X Version 14.6.10 (7373)

Pin=100mW/Area Scan (91x91x1): Interpolated grid: dx=1.000 mm, dy=1.000 mm
Maximum value of SAR (interpolated) = 19.7 W/kg

Pin=100mW/Zoom Scan (7x7x12)/Cube 0: Measurement grid: dx=4mm, dy=4mm, dz=2mm
Reference Value = 72.33 V/m; Power Drift = -0.18 dB
Peak SAR (extrapolated) = 34.0 W/kg
SAR(1 g) = 8.1 W/kg; SAR(10 g) = 2.33 W/kg
Maximum value of SAR (measured) = 20.6 W/kg

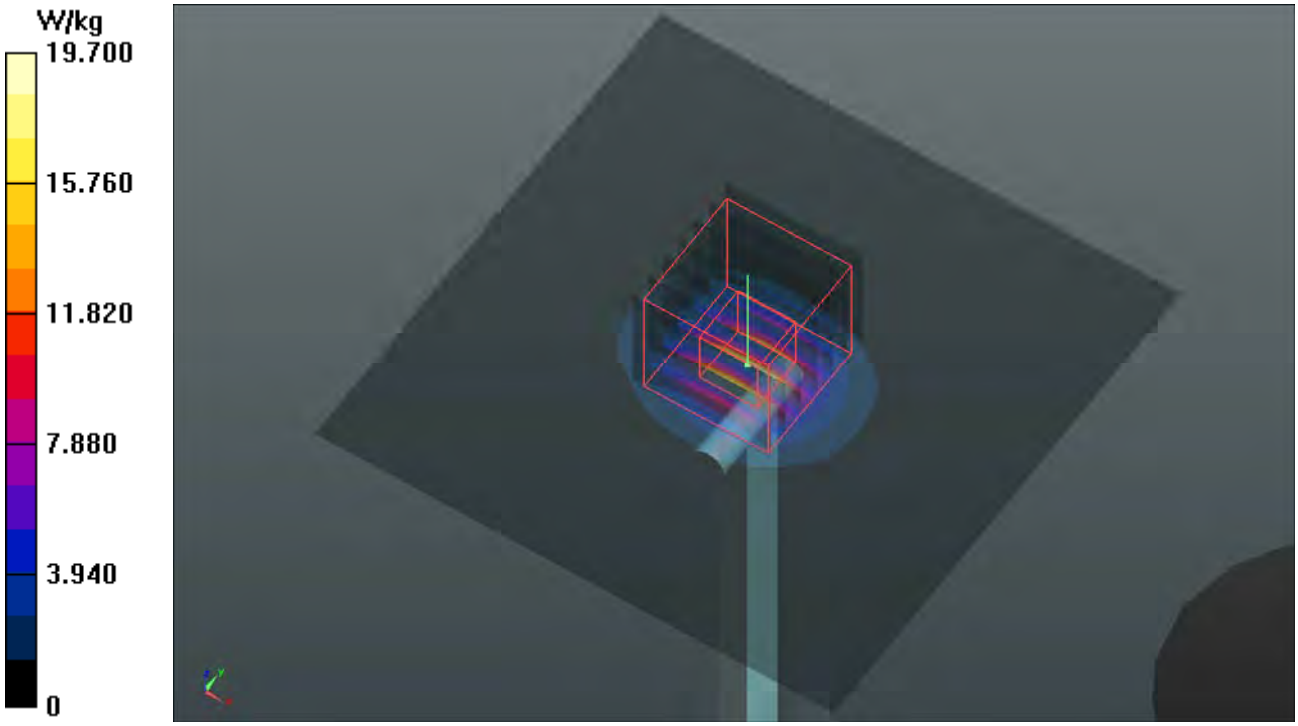

Test Laboratory: Bureau Veritas ADT SAR/HAC Testing Lab Date: 2017/07/13

System Check_H5800_170713

DUT: Dipole 5 GHz; Type: D5GHzV2; SN: 1019

Communication System: CW; Frequency: 5800 MHz;Duty Cycle: 1:1
Medium: H34T60N2_0713 Medium parameters used: f = 5800 MHz; σ = 5.176 S/m; ε_r = 33.874; ρ = 1000 kg/m^3
Ambient Temperature：23.8 ℃ ; Liquid Temperature：23.2 ℃

DASY5 Configuration:
- Probe: EX3DV4 - SN3753; ConvF(4.76, 4.76, 4.76); Calibrated: 2017/05/05;
- Sensor-Surface: 1.4mm (Mechanical Surface Detection)
- Electronics: DAE4 Sn916; Calibrated: 2016/12/15
- Phantom: Twin SAM Phantom_1823; Type: QD000P40CD;
- Measurement SW: DASY52, Version 52.8 (8); SEMCAD X Version 14.6.10 (7373)

Pin=100mW/Area Scan (91x91x1): Interpolated grid: dx=1.000 mm, dy=1.000 mm
Maximum value of SAR (interpolated) = 19.7 W/kg

Pin=100mW/Zoom Scan (7x7x12)/Cube 0: Measurement grid: dx=4mm, dy=4mm, dz=2mm
Reference Value = 70.54 V/m; Power Drift = -0.10 dB
Peak SAR (extrapolated) = 35.7 W/kg
SAR(1 g) = 8.16 W/kg; SAR(10 g) = 2.33 W/kg
Maximum value of SAR (measured) = 21.0 W/kg

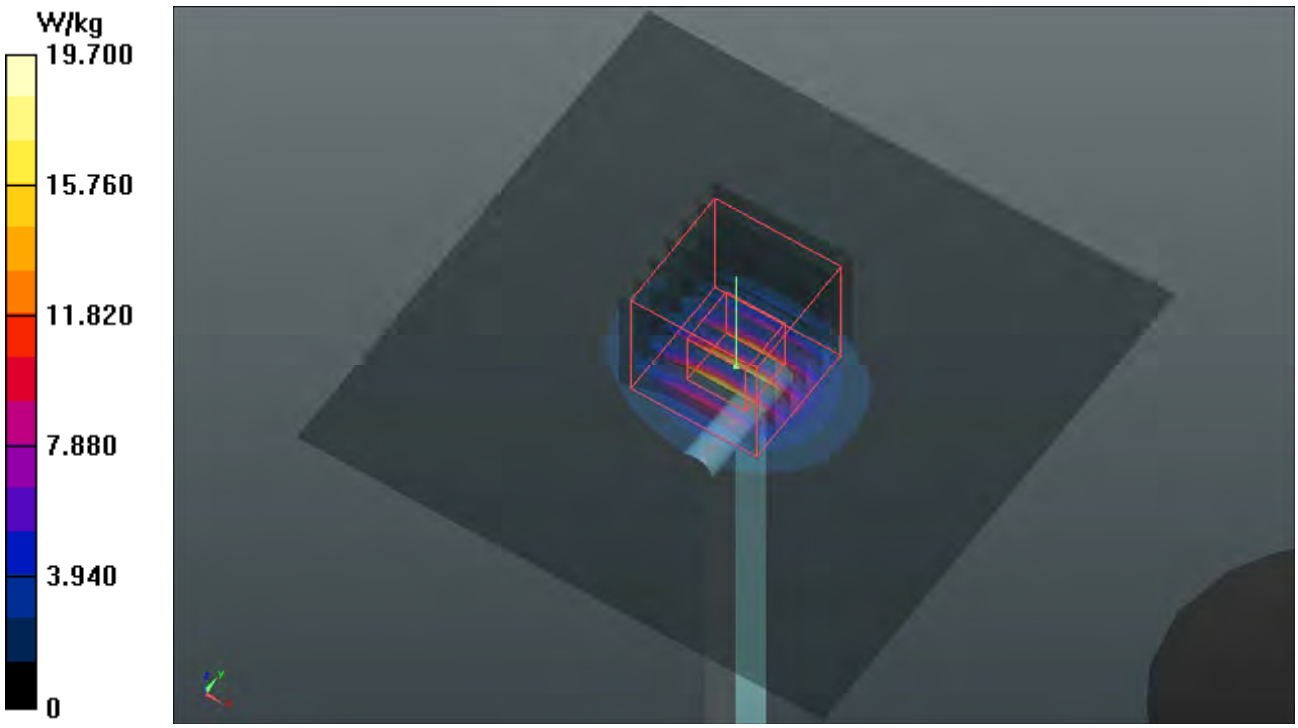

System Check_B750_170712

DUT: Dipole 750 MHz; Type: D750V3; SN: 1013

Communication System: CW; Frequency: 750 MHz;Duty Cycle: 1:1
Medium: B06T09N1_0712 Medium parameters used: f = 750 MHz; σ = 0.959 S/m; ε_r = 53.094; ρ = 1000 kg/m^3
Ambient Temperature：23.9 ℃ ; Liquid Temperature：23.3 ℃

DASY5 Configuration:
- Probe: EX3DV4 - SN3753; ConvF(9.43, 9.43, 9.43); Calibrated: 2017/05/05;
- Sensor-Surface: 1.4mm (Mechanical Surface Detection)
- Electronics: DAE4 Sn916; Calibrated: 2016/12/15
- Phantom: Twin SAM Phantom_1485; Type: QD000P40;
- Measurement SW: DASY52, Version 52.8 (8); SEMCAD X Version 14.6.10 (7373)

Pin=250mW/Area Scan (61x81x1): Interpolated grid: dx=1.500 mm, dy=1.500 mm
Maximum value of SAR (interpolated) = 2.71 W/kg

Pin=250mW/Zoom Scan (5x5x7)/Cube 0: Measurement grid: dx=8mm, dy=8mm, dz=5mm
Reference Value = 53.47 V/m; Power Drift = -0.18 dB
Peak SAR (extrapolated) = 3.17 W/kg
SAR(1 g) = 2.17 W/kg; SAR(10 g) = 1.44 W/kg
Maximum value of SAR (measured) = 2.73 W/kg

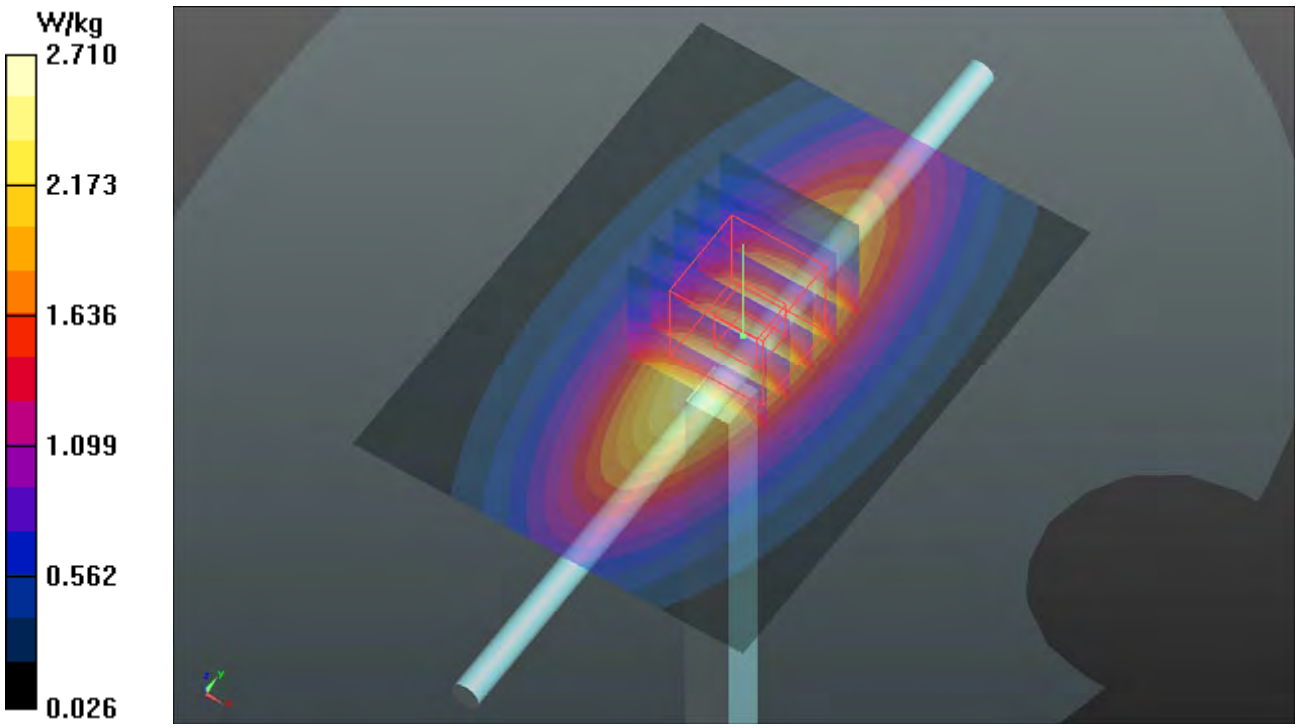

System Check_B835_170712

DUT: Dipole 835 MHz; Type: D835V2; SN: 4d121

Communication System: CW; Frequency: 835 MHz;Duty Cycle: 1:1
Medium: B07T10N3_0712 Medium parameters used: f = 835 MHz; σ = 1.002 S/m; ε_r = 54.241; ρ = 1000 kg/m^3
Ambient Temperature：24.1 ℃ ; Liquid Temperature：23.6 ℃

DASY5 Configuration:
- Probe: EX3DV4 - SN3753; ConvF(9.21, 9.21, 9.21); Calibrated: 2017/05/05;
- Sensor-Surface: 1.4mm (Mechanical Surface Detection)
- Electronics: DAE4 Sn916; Calibrated: 2016/12/15
- Phantom: Twin SAM Phantom_1485; Type: QD000P40;
- Measurement SW: DASY52, Version 52.8 (8); SEMCAD X Version 14.6.10 (7373)

Pin=250mW/Area Scan (61x61x1): Interpolated grid: dx=1.500 mm, dy=1.500 mm
Maximum value of SAR (interpolated) = 3.24 W/kg

Pin=250mW/Zoom Scan (5x5x7)/Cube 0: Measurement grid: dx=8mm, dy=8mm, dz=5mm
Reference Value = 53.19 V/m; Power Drift = -0.05 dB
Peak SAR (extrapolated) = 3.66 W/kg
SAR(1 g) = 2.42 W/kg; SAR(10 g) = 1.59 W/kg
Maximum value of SAR (measured) = 3.24 W/kg

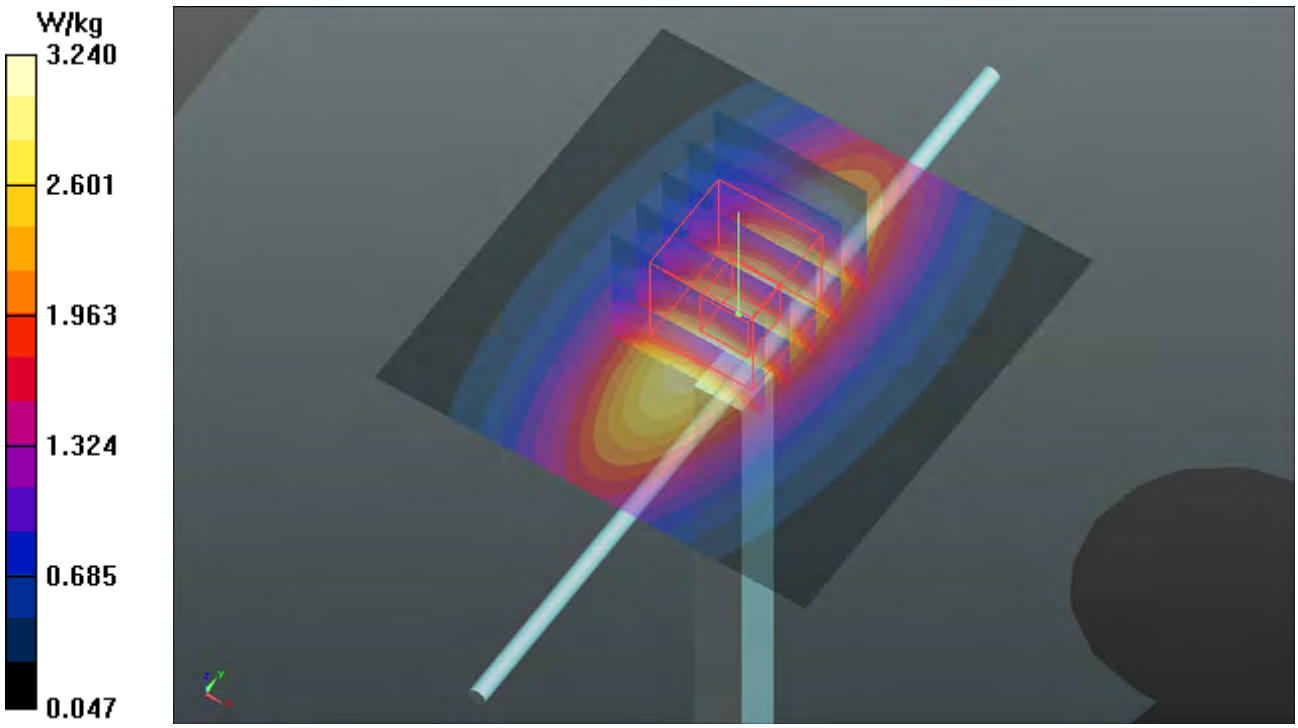

Test Laboratory: Bureau Veritas ADT SAR/HAC Testing Lab Date: 2017/07/11

System Check_B1750_170711

DUT: Dipole 1750 MHz; Type: D1750V2; SN: 1055

Communication System: CW; Frequency: 1750 MHz;Duty Cycle: 1:1
Medium: B16T20N2_0711 Medium parameters used: f = 1750 MHz; σ = 1.444 S/m; ε_r = 51.025; ρ = 1000 kg/m^3
Ambient Temperature：23.7 ℃ ; Liquid Temperature：23.3 ℃

DASY5 Configuration:
- Probe: EX3DV4 - SN3971; ConvF(8.51, 8.51, 8.51); Calibrated: 2017/03/24;
- Sensor-Surface: 1.4mm (Mechanical Surface Detection)
- Electronics: DAE3 Sn579; Calibrated: 2016/09/05
- Phantom: Twin SAM Phantom_1823; Type: QD000P40CD;
- Measurement SW: DASY52, Version 52.8 (8); SEMCAD X Version 14.6.10 (7373)

Pin=250mW/Area Scan (61x61x1): Interpolated grid: dx=1.500 mm, dy=1.500 mm
Maximum value of SAR (interpolated) = 12.7 W/kg

Pin=250mW/Zoom Scan (5x5x7)/Cube 0: Measurement grid: dx=8mm, dy=8mm, dz=5mm
Reference Value = 93.47 V/m; Power Drift = 0.03 dB
Peak SAR (extrapolated) = 15.3 W/kg
SAR(1 g) = 8.8 W/kg; SAR(10 g) = 4.76 W/kg
Maximum value of SAR (measured) = 12.2 W/kg

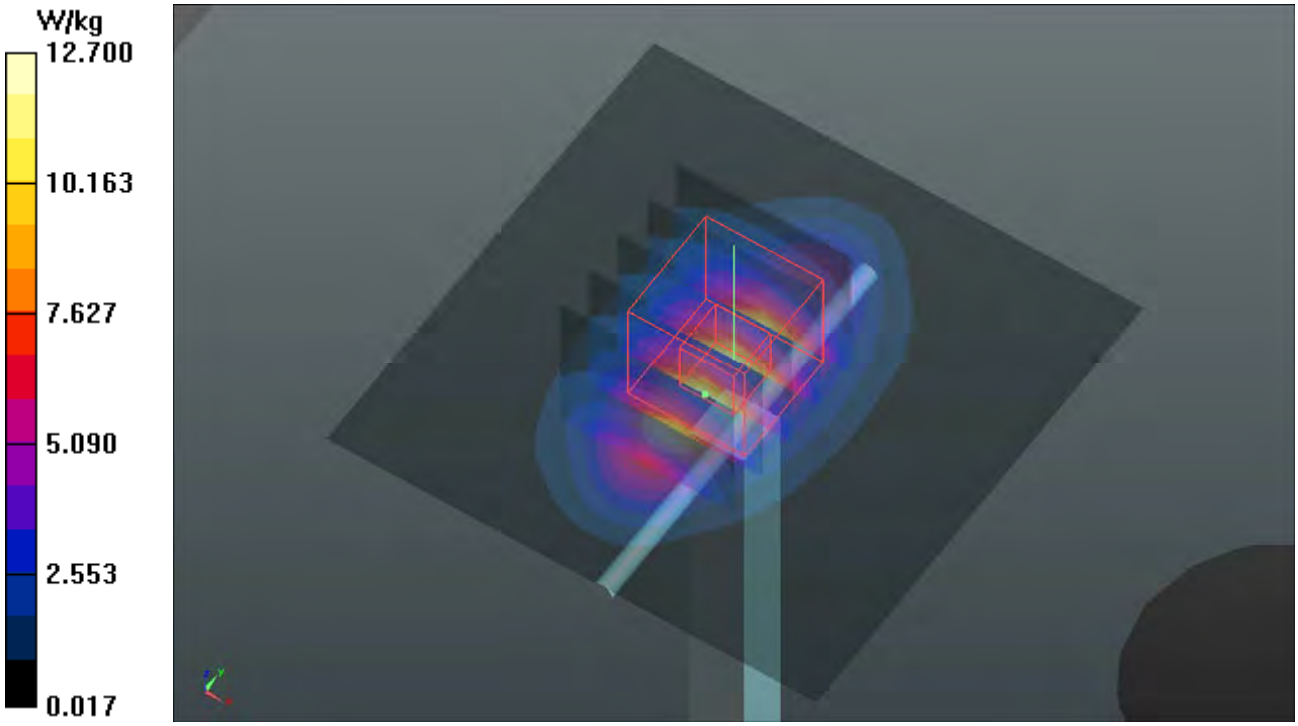

Test Laboratory: Bureau Veritas ADT SAR/HAC Testing Lab Date: 2017/07/11

System Check_B1900_170711

DUT: Dipole 1900 MHz; Type: D1900V2; SN: 5d036

Communication System: CW; Frequency: 1900 MHz;Duty Cycle: 1:1
Medium: B16T20N2_0711 Medium parameters used: f = 1900 MHz; σ = 1.566 S/m; ε_r = 50.88; ρ = 1000 kg/m^3
Ambient Temperature：23.9 ℃ ; Liquid Temperature：23.6 ℃

DASY5 Configuration:
- Probe: EX3DV4 - SN3971; ConvF(8.26, 8.26, 8.26); Calibrated: 2017/03/24;
- Sensor-Surface: 1.4mm (Mechanical Surface Detection)
- Electronics: DAE3 Sn579; Calibrated: 2016/09/05
- Phantom: Twin SAM Phantom_1823; Type: QD000P40CD;
- Measurement SW: DASY52, Version 52.8 (8); SEMCAD X Version 14.6.10 (7373)

Pin=250mW/Area Scan (61x61x1): Interpolated grid: dx=1.500 mm, dy=1.500 mm
Maximum value of SAR (interpolated) = 14.1 W/kg

Pin=250mW/Zoom Scan (5x5x7)/Cube 0: Measurement grid: dx=8mm, dy=8mm, dz=5mm
Reference Value = 94.68 V/m; Power Drift = 0.03 dB
Peak SAR (extrapolated) = 17.3 W/kg
SAR(1 g) = 9.66 W/kg; SAR(10 g) = 5.05 W/kg
Maximum value of SAR (measured) = 13.8 W/kg

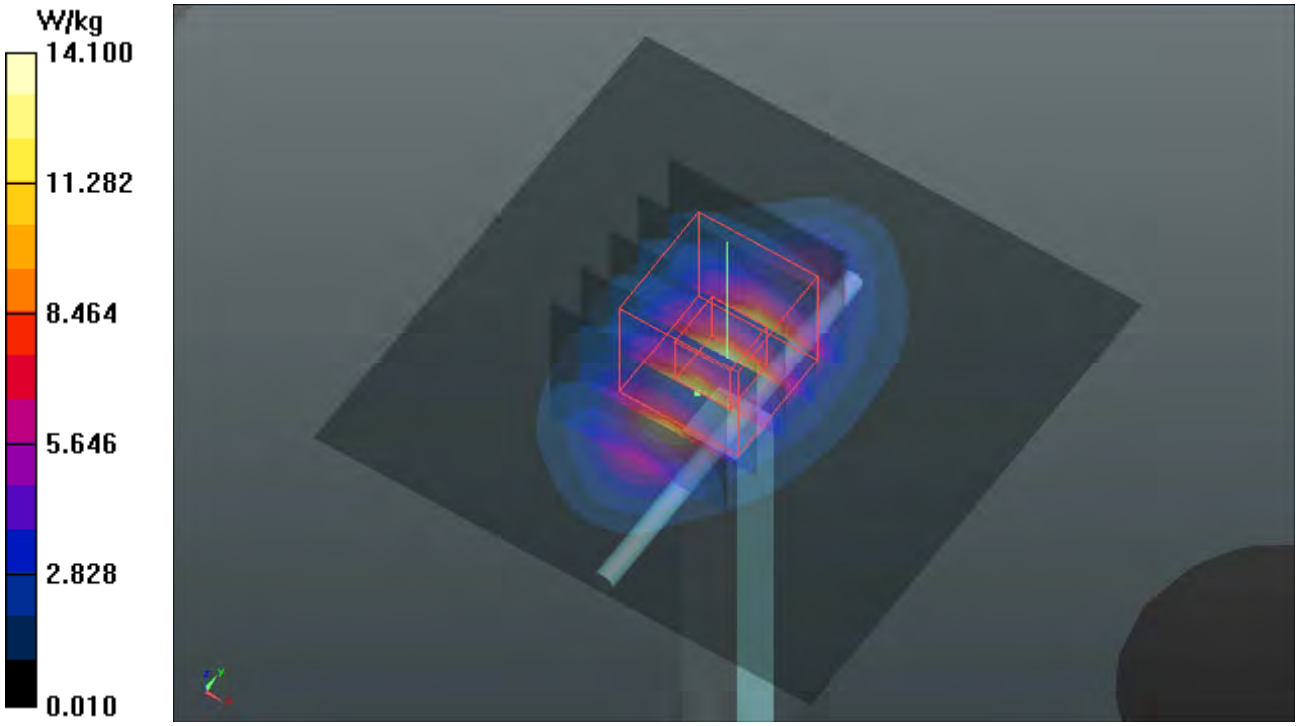

Test Laboratory: Bureau Veritas ADT SAR/HAC Testing Lab Date: 2017/07/14

System Check_B2450_170714

DUT: Dipole 2450 MHz; Type: D2450V2; SN: 737

Communication System: CW; Frequency: 2450 MHz;Duty Cycle: 1:1
Medium: B19T27N4_0714 Medium parameters used: f = 2450 MHz; σ = 1.997 S/m; ε_r = 51.558; ρ = 1000 kg/m^3
Ambient Temperature：23.8 ℃ ; Liquid Temperature：23.2 ℃

DASY5 Configuration:
- Probe: EX3DV4 - SN3753; ConvF(7.27, 7.27, 7.27); Calibrated: 2017/05/05;
- Sensor-Surface: 1.4mm (Mechanical Surface Detection)
- Electronics: DAE4 Sn916; Calibrated: 2016/12/15
- Phantom: Twin SAM Phantom_1127; Type: QD000P40CA;
- Measurement SW: DASY52, Version 52.8 (8); SEMCAD X Version 14.6.10 (7373)

Pin=250mW/Area Scan (81x81x1): Interpolated grid: dx=1.200 mm, dy=1.200 mm
Maximum value of SAR (interpolated) = 18.5 W/kg

Pin=250mW/Zoom Scan (7x7x7)/Cube 0: Measurement grid: dx=5mm, dy=5mm, dz=5mm
Reference Value = 97.78 V/m; Power Drift = -0.11 dB
Peak SAR (extrapolated) = 24.8 W/kg
SAR(1 g) = 12 W/kg; SAR(10 g) = 5.56 W/kg
Maximum value of SAR (measured) = 18.4 W/kg

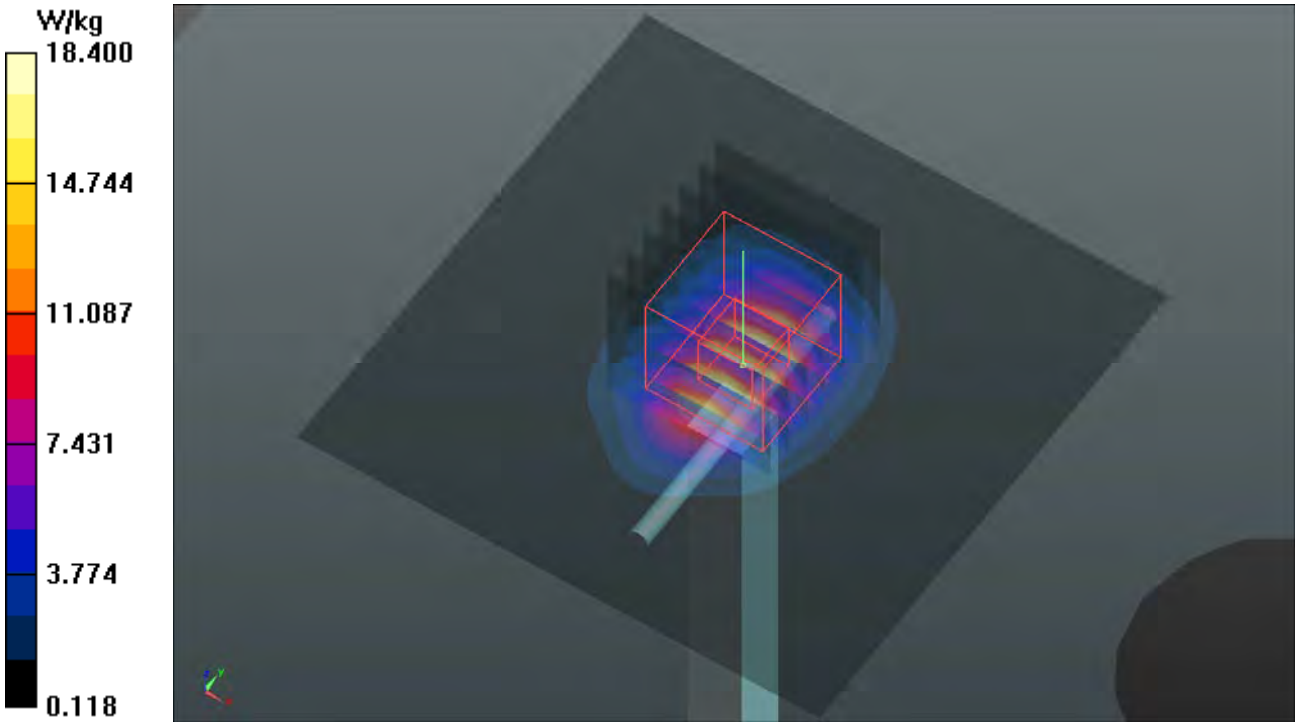

System Check_B2600_170711

DUT: Dipole 2600 MHz; Type: D2600V2; SN: 1020

Communication System: CW; Frequency: 2600 MHz;Duty Cycle: 1:1
Medium: B19T27N4_0711 Medium parameters used: f = 2600 MHz; σ = 2.192 S/m; ε_r = 50.137; ρ = 1000 kg/m^3
Ambient Temperature：23.7 ℃ ; Liquid Temperature：23.3 ℃

DASY5 Configuration:
- Probe: EX3DV4 - SN3971; ConvF(7.32, 7.32, 7.32); Calibrated: 2017/03/24;
- Sensor-Surface: 1.4mm (Mechanical Surface Detection)
- Electronics: DAE3 Sn579; Calibrated: 2016/09/05
- Phantom: Twin SAM Phantom_1823; Type: QD000P40CD;
- Measurement SW: DASY52, Version 52.8 (8); SEMCAD X Version 14.6.10 (7373)

Pin=250mW/Area Scan (81x81x1): Interpolated grid: dx=1.200 mm, dy=1.200 mm
Maximum value of SAR (interpolated) = 23.6 W/kg

Pin=250mW/Zoom Scan (7x7x7)/Cube 0: Measurement grid: dx=5mm, dy=5mm, dz=5mm
Reference Value = 106.4 V/m; Power Drift = -0.04 dB
Peak SAR (extrapolated) = 30.0 W/kg
SAR(1 g) = 13.5 W/kg; SAR(10 g) = 5.91 W/kg
Maximum value of SAR (measured) = 23.6 W/kg

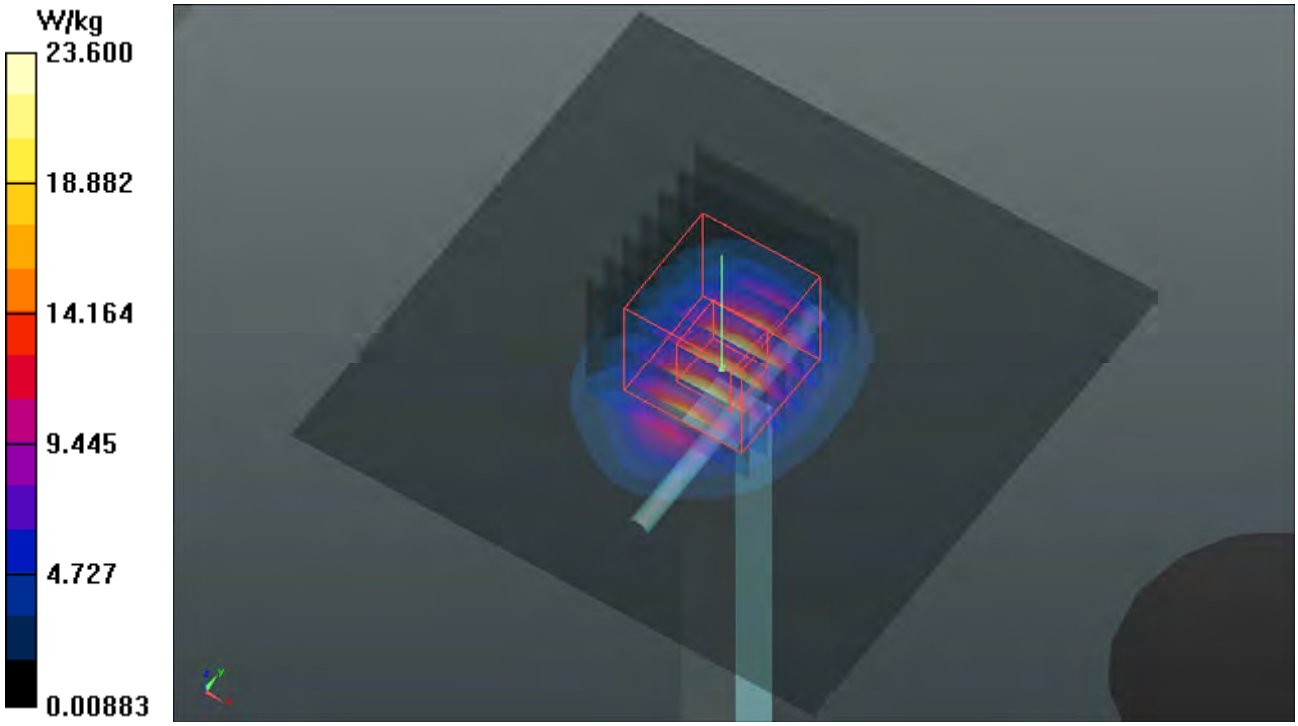

Test Laboratory: Bureau Veritas ADT SAR/HAC Testing Lab Date: 2017/07/14

System Check_B5250_170714

DUT: Dipole 5 GHz; Type: D5GHzV2; SN: 1019

Communication System: CW; Frequency: 5250 MHz;Duty Cycle: 1:1
Medium: B34T60N1_0714 Medium parameters used: f = 5250 MHz; σ = 5.395 S/m; ε_r = 47.266; ρ = 1000 kg/m^3
Ambient Temperature：23.9 ℃ ; Liquid Temperature：23.3 ℃

DASY5 Configuration:
- Probe: EX3DV4 - SN3971; ConvF(4.7, 4.7, 4.7); Calibrated: 2017/03/24;
- Sensor-Surface: 1.4mm (Mechanical Surface Detection)
- Electronics: DAE3 Sn579; Calibrated: 2016/09/05
- Phantom: Twin SAM Phantom_1485; Type: QD000P40
- Measurement SW: DASY52, Version 52.8 (8); SEMCAD X Version 14.6.10 (7373)

Pin=100mW/Area Scan (91x91x1): Interpolated grid: dx=1.000 mm, dy=1.000 mm
Maximum value of SAR (interpolated) = 17.1 W/kg

Pin=100mW/Zoom Scan (7x7x12)/Cube 0: Measurement grid: dx=4mm, dy=4mm, dz=2mm
Reference Value = 55.79 V/m; Power Drift = -0.07 dB
Peak SAR (extrapolated) = 30.2 W/kg
SAR(1 g) = 7.29 W/kg; SAR(10 g) = 2.09 W/kg
Maximum value of SAR (measured) = 18.3 W/kg

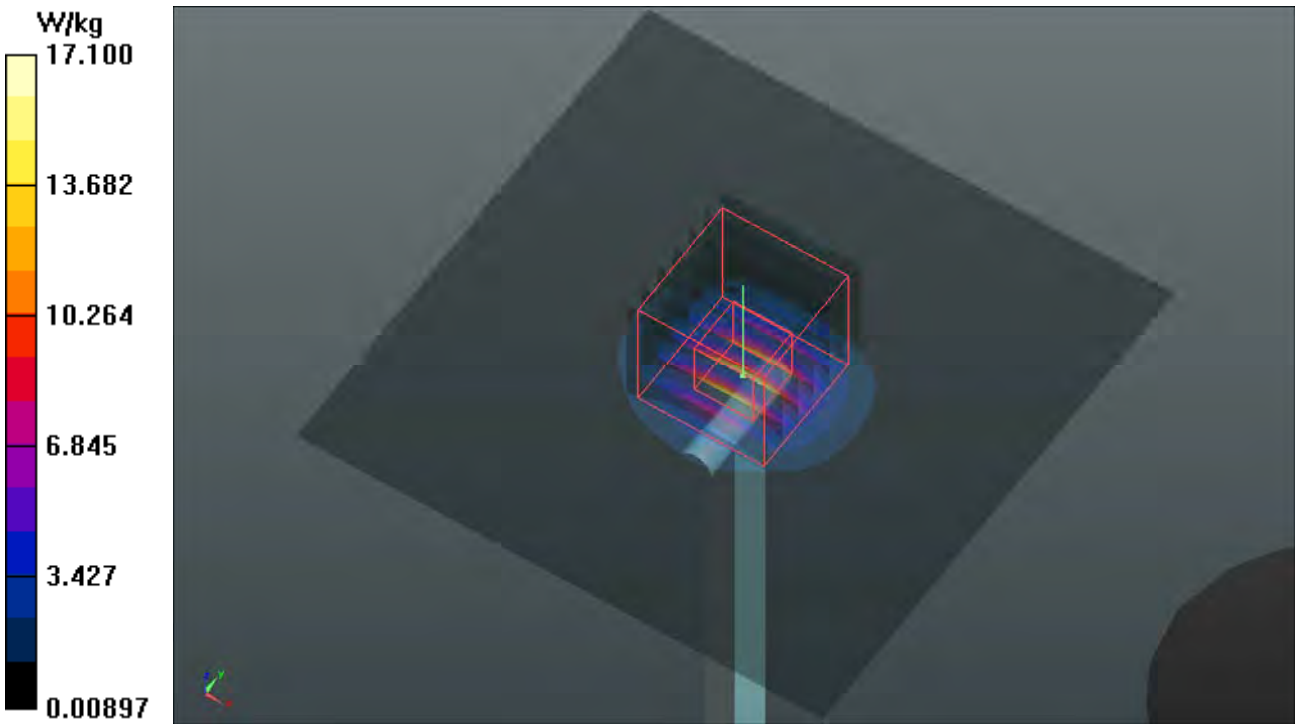

System Check_B5600_170714

DUT: Dipole 5 GHz; Type: D5GHzV2; SN: 1019

Communication System: CW; Frequency: 5600 MHz;Duty Cycle: 1:1
Medium: B34T60N1_0714 Medium parameters used: f = 5600 MHz; σ = 5.822 S/m; ε_r = 46.671; ρ = 1000 kg/m^3
Ambient Temperature：23.9 ℃ ; Liquid Temperature：23.3 ℃

DASY5 Configuration:
- Probe: EX3DV4 - SN3971; ConvF(4.1, 4.1, 4.1); Calibrated: 2017/03/24;
- Sensor-Surface: 1.4mm (Mechanical Surface Detection)
- Electronics: DAE3 Sn579; Calibrated: 2016/09/05
- Phantom: Twin SAM Phantom_1485; Type: QD000P40;
- Measurement SW: DASY52, Version 52.8 (8); SEMCAD X Version 14.6.10 (7373)

Pin=100mW/Area Scan (91x91x1): Interpolated grid: dx=1.000 mm, dy=1.000 mm
Maximum value of SAR (interpolated) = 18.1 W/kg

Pin=100mW/Zoom Scan (7x7x12)/Cube 0: Measurement grid: dx=4mm, dy=4mm, dz=2mm
Reference Value = 66.86 V/m; Power Drift = -0.08 dB
Peak SAR (extrapolated) = 32.3 W/kg
SAR(1 g) = 7.71 W/kg; SAR(10 g) = 2.15 W/kg
Maximum value of SAR (measured) = 19.9 W/kg

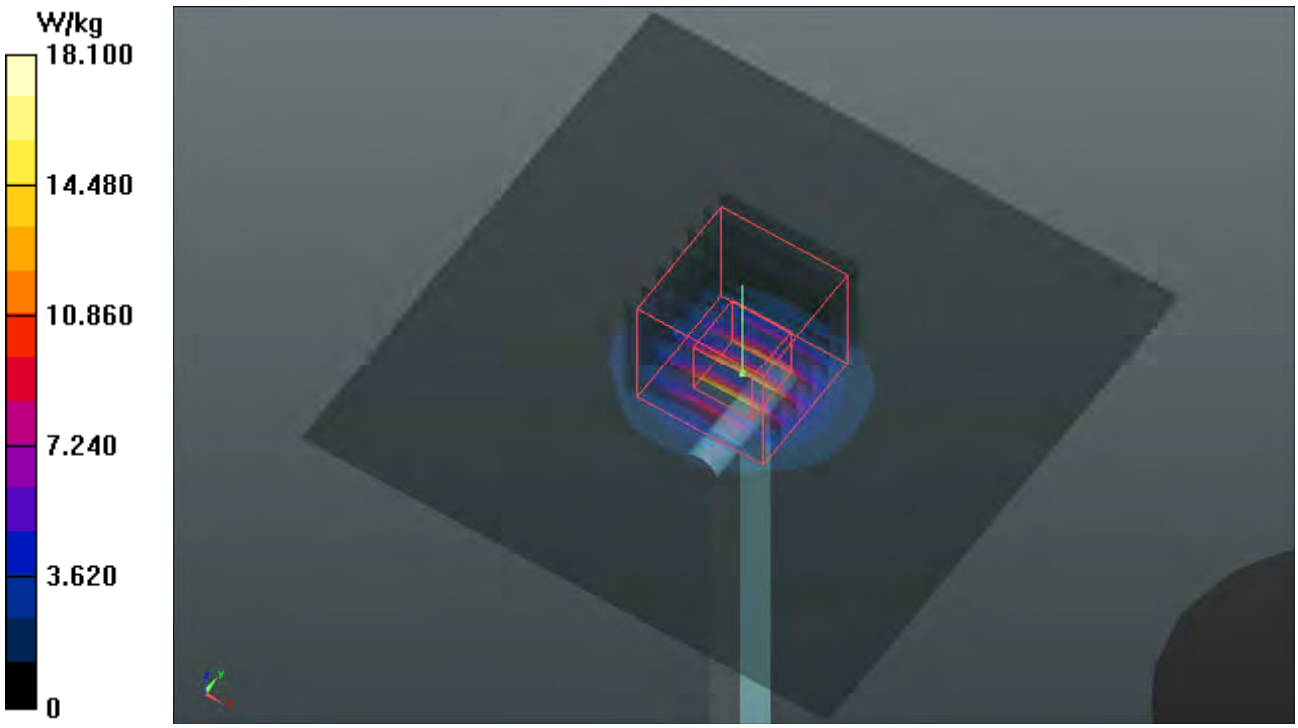

Test Laboratory: Bureau Veritas ADT SAR/HAC Testing Lab Date: 2017/07/14

System Check_B5800_170714

DUT: Dipole 5 GHz; Type: D5GHzV2; SN: 1019

Communication System: CW; Frequency: 5800 MHz;Duty Cycle: 1:1
Medium: B34T60N1_0714 Medium parameters used: f = 5800 MHz; σ = 6.11 S/m; ε_r = 46.403; ρ = 1000 kg/m^3
Ambient Temperature：23.9 ℃ ; Liquid Temperature：23.3 ℃

DASY5 Configuration:
- Probe: EX3DV4 - SN3971; ConvF(4.22, 4.22, 4.22); Calibrated: 2017/03/24;
- Sensor-Surface: 1.4mm (Mechanical Surface Detection)
- Electronics: DAE3 Sn579; Calibrated: 2016/09/05
- Phantom: Twin SAM Phantom_1485; Type: QD000P40;
- Measurement SW: DASY52, Version 52.8 (8); SEMCAD X Version 14.6.10 (7373)

Pin=100mW/Area Scan (91x91x1): Interpolated grid: dx=1.000 mm, dy=1.000 mm
Maximum value of SAR (interpolated) = 19.1 W/kg

Pin=100mW/Zoom Scan (7x7x12)/Cube 0: Measurement grid: dx=4mm, dy=4mm, dz=2mm
Reference Value = 56.53 V/m; Power Drift = -0.13 dB
Peak SAR (extrapolated) = 37.6 W/kg
SAR(1 g) = 7.76 W/kg; SAR(10 g) = 2.17 W/kg
Maximum value of SAR (measured) = 20.7 W/kg

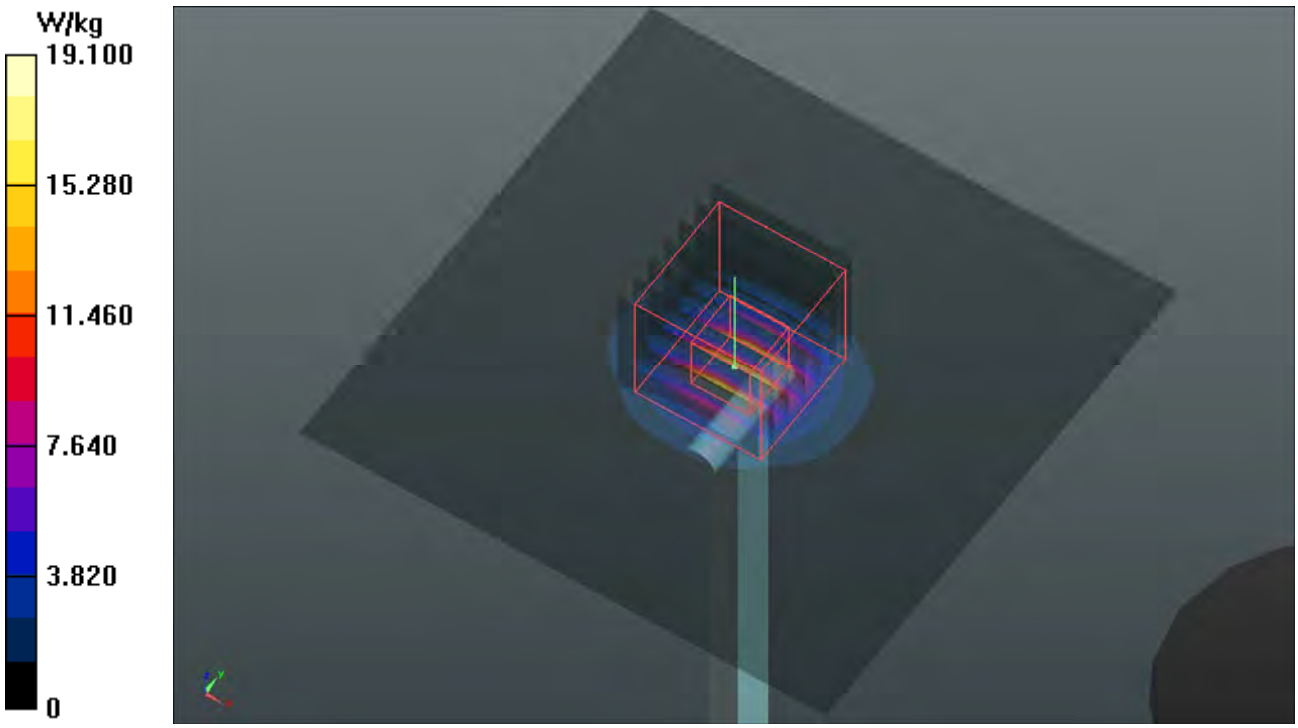

Appendix B. SAR Plots of SAR Measurement

The SAR plots for highest measured SAR in each exposure configuration, wireless mode and frequency band combination, and measured SAR > 1.5 W/kg are shown as follows.

P01 GSM850_GPRS10_Left Cheek_Ch128

DUT: 170425C26

Communication System: GPRS10; Frequency: 824.2 MHz;Duty Cycle: 1:4
Medium: H07T10N1_0713 Medium parameters used: f = 824.2 MHz; σ = 0.908 S/m; ε_r = 41.811; ρ = 1000 kg/m^3
Ambient Temperature：23.9 ℃ ; Liquid Temperature：23.4 ℃

DASY5 Configuration:
- Probe: EX3DV4 - SN7351; ConvF(10.37, 10.37, 10.37); Calibrated: 2016/12/20;
- Sensor-Surface: 1.4mm (Mechanical Surface Detection)
- Electronics: DAE4 Sn1431; Calibrated: 2017/03/20
- Phantom: Twin SAM Phantom_1654; Type: QD000P40;
- Measurement SW: DASY52, Version 52.8 (8); SEMCAD X Version 14.6.10 (7373)

- Area Scan (71x121x1): Interpolated grid: dx=1.500 mm, dy=1.500 mm
Maximum value of SAR (interpolated) = 0.147 W/kg

- Zoom Scan (5x5x7)/Cube 0: Measurement grid: dx=8mm, dy=8mm, dz=5mm
Reference Value = 13.07 V/m; Power Drift = 0.01 dB
Peak SAR (extrapolated) = 0.158 W/kg
SAR(1 g) = 0.129 W/kg; SAR(10 g) = 0.103 W/kg
Maximum value of SAR (measured) = 0.143 W/kg

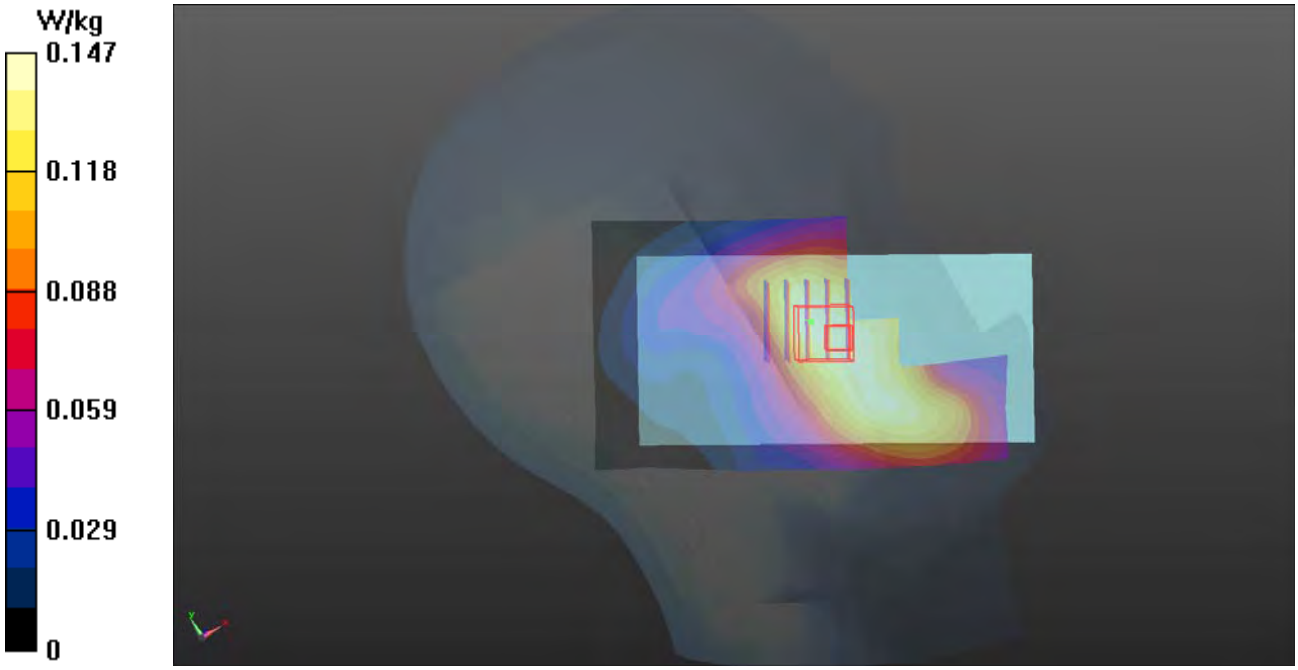

P02 GSM1900_GPRS10_Left Cheek_Ch661

DUT: 170425C26

Communication System: GPRS10; Frequency: 1880 MHz;Duty Cycle: 1:4
Medium: H16T20N3_0713 Medium parameters used: f = 1880 MHz; σ = 1.436 S/m; ε_r = 39.21; ρ = 1000 kg/m^3
Ambient Temperature：23.9 ℃ ; Liquid Temperature：23.4 ℃

DASY5 Configuration:
- Probe: EX3DV4 - SN7351; ConvF(8.59, 8.59, 8.59); Calibrated: 2016/12/20;
- Sensor-Surface: 1.4mm (Mechanical Surface Detection)
- Electronics: DAE4 Sn1431; Calibrated: 2017/03/20
- Phantom: Twin SAM Phantom_1822; Type: QD000P40;
- Measurement SW: DASY52, Version 52.8 (8); SEMCAD X Version 14.6.10 (7373)

- Area Scan (61x121x1): Interpolated grid: dx=1.500 mm, dy=1.500 mm
Maximum value of SAR (interpolated) = 0.0234 W/kg

- Zoom Scan (5x5x7)/Cube 0: Measurement grid: dx=8mm, dy=8mm, dz=5mm
Reference Value = 4.324 V/m; Power Drift = 0.16 dB
Peak SAR (extrapolated) = 0.0270 W/kg
SAR(1 g) = 0.016 W/kg; SAR(10 g) = 0.009 W/kg
Maximum value of SAR (measured) = 0.0226 W/kg

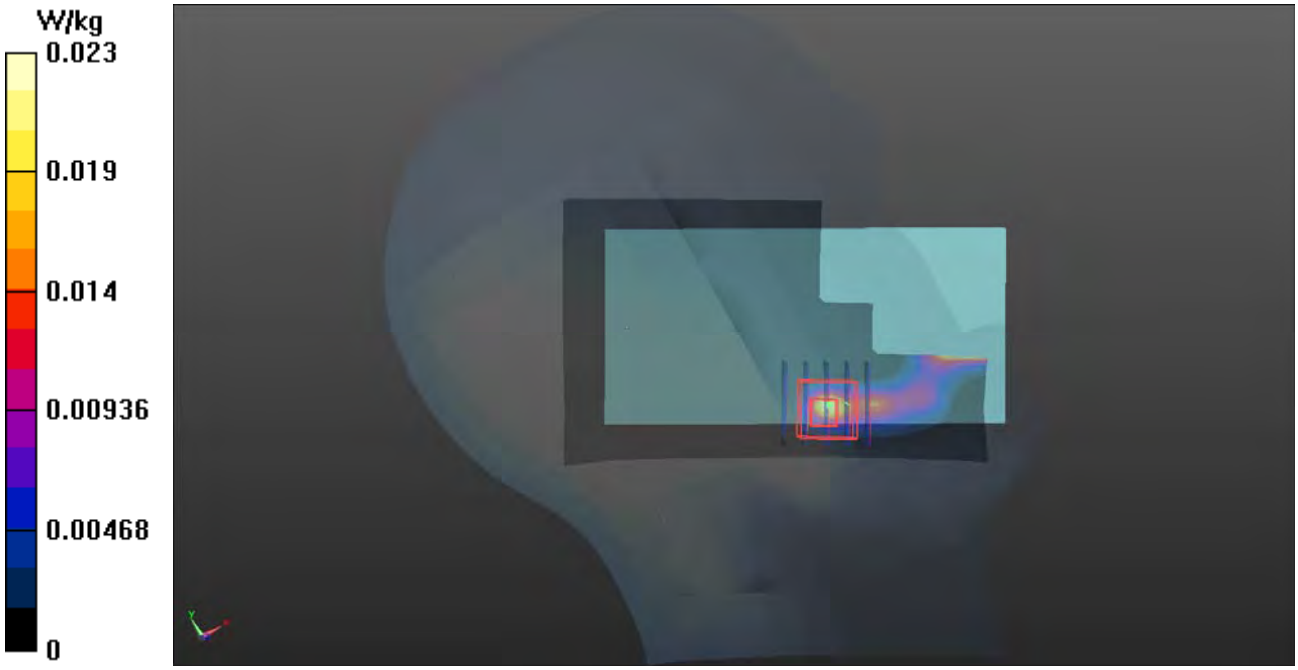

P03 WCDMA II_RMC12.2K_Left Cheek_Ch9400

DUT: 170425C26

Communication System: WCDMA; Frequency: 1880 MHz;Duty Cycle: 1:1
Medium: H16T20N1_0712 Medium parameters used: f = 1880 MHz; σ = 1.441 S/m; ε_r = 39.646; ρ = 1000 kg/m^3
Ambient Temperature：23.8 ℃ ; Liquid Temperature：23.2 ℃

DASY5 Configuration:
- Probe: EX3DV4 - SN3753; ConvF(7.79, 7.79, 7.79); Calibrated: 2017/05/05;
- Sensor-Surface: 1.4mm (Mechanical Surface Detection)
- Electronics: DAE4 Sn916; Calibrated: 2016/12/15
- Phantom: Twin SAM Phantom_1485; Type: QD000P40;
- Measurement SW: DASY52, Version 52.8 (8); SEMCAD X Version 14.6.10 (7373)

- Area Scan (71x121x1): Interpolated grid: dx=1.500 mm, dy=1.500 mm
Maximum value of SAR (interpolated) = 0.0407 W/kg

- Zoom Scan (5x5x7)/Cube 0: Measurement grid: dx=8mm, dy=8mm, dz=5mm
Reference Value = 5.115 V/m; Power Drift = -0.03 dB
Peak SAR (extrapolated) = 0.0430 W/kg
SAR(1 g) = 0.027 W/kg; SAR(10 g) = 0.017 W/kg
Maximum value of SAR (measured) = 0.0374 W/kg

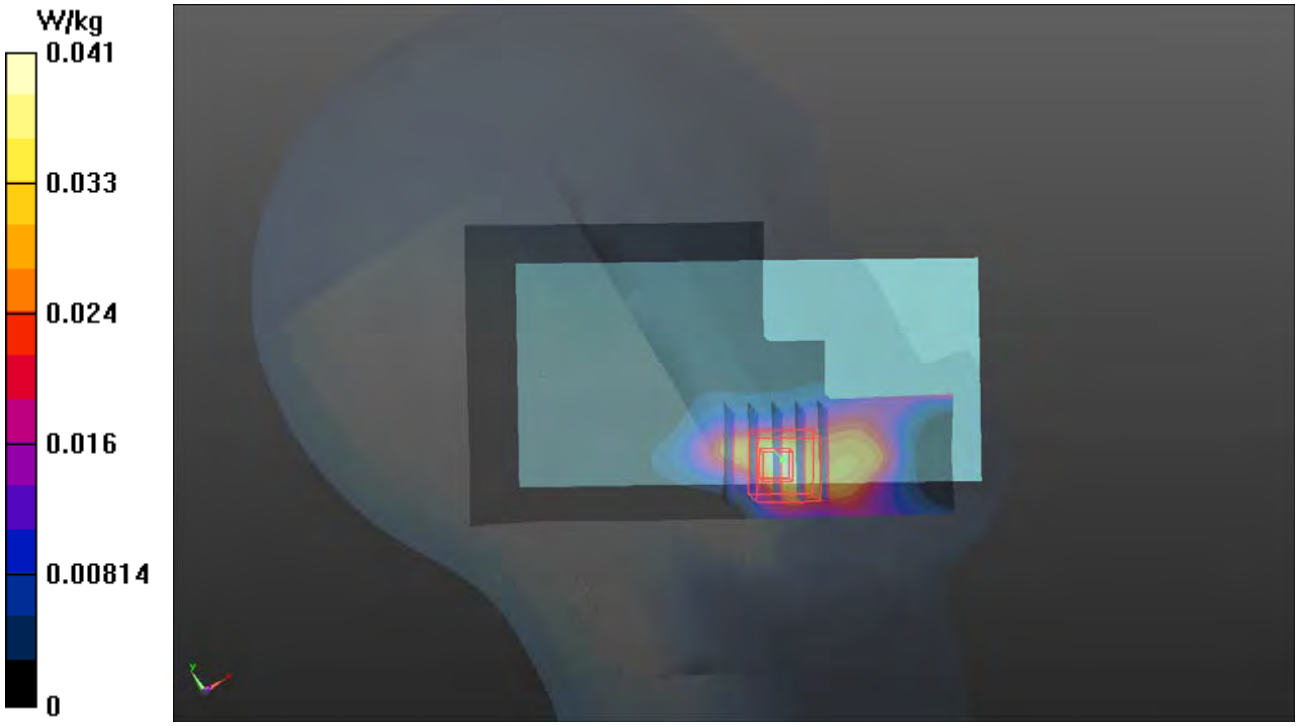

P04 WCDMA IV_RMC12.2K_Left Cheek_Ch1312

DUT: 170425C26

Communication System: WCDMA; Frequency: 1712.4 MHz;Duty Cycle: 1:1
Medium: H16T20N1_0712 Medium parameters used: f = 1712.4 MHz; σ = 1.295 S/m; ε_r = 40.299; ρ = 1000 kg/m^3
Ambient Temperature：23.8 ℃ ; Liquid Temperature：23.2 ℃

DASY5 Configuration:
- Probe: EX3DV4 - SN3753; ConvF(8.16, 8.16, 8.16); Calibrated: 2017/05/05;
- Sensor-Surface: 1.4mm (Mechanical Surface Detection)
- Electronics: DAE4 Sn916; Calibrated: 2016/12/15
- Phantom: Twin SAM Phantom_1485; Type: QD000P40;
- Measurement SW: DASY52, Version 52.8 (8); SEMCAD X Version 14.6.10 (7373)

- Area Scan (71x121x1): Interpolated grid: dx=1.500 mm, dy=1.500 mm
Maximum value of SAR (interpolated) = 0.0686 W/kg

- Zoom Scan (5x5x7)/Cube 0: Measurement grid: dx=8mm, dy=8mm, dz=5mm
Reference Value = 7.019 V/m; Power Drift = -0.01 dB
Peak SAR (extrapolated) = 0.0690 W/kg
SAR(1 g) = 0.047 W/kg; SAR(10 g) = 0.031 W/kg
Maximum value of SAR (measured) = 0.0606 W/kg

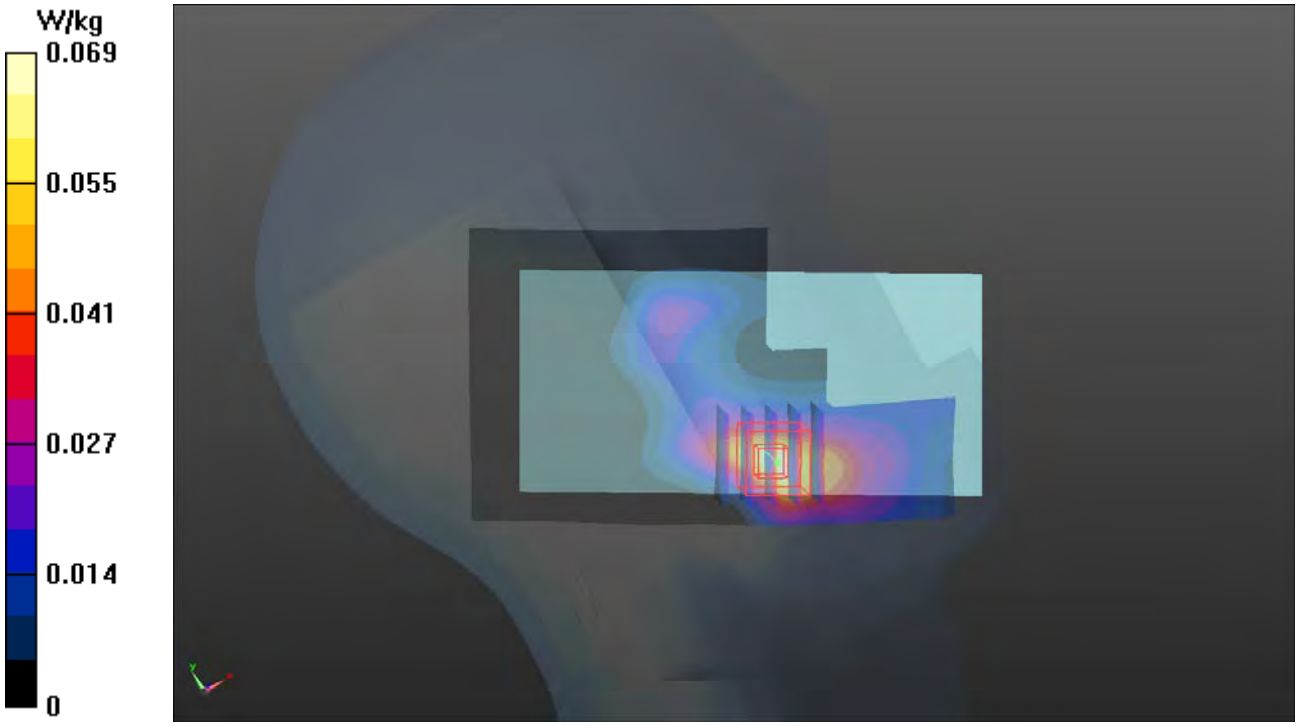

P05 WCDMA V_RMC12.2K_Right Cheek_Ch4132

DUT: 170425C26

Communication System: WCDMA; Frequency: 826.4 MHz;Duty Cycle: 1:1
Medium: H07T10N1_0712 Medium parameters used: f = 826.4 MHz; σ = 0.913 S/m; ε_r = 42.44; ρ = 1000 kg/m^3
Ambient Temperature：23.8 ℃ ; Liquid Temperature：23.2 ℃

DASY5 Configuration:
- Probe: EX3DV4 - SN3753; ConvF(9.13, 9.13, 9.13); Calibrated: 2017/05/05;
- Sensor-Surface: 1.4mm (Mechanical Surface Detection)
- Electronics: DAE4 Sn916; Calibrated: 2016/12/15
- Phantom: Twin SAM Phantom_1485; Type: QD000P40;
- Measurement SW: DASY52, Version 52.8 (8); SEMCAD X Version 14.6.10 (7373)

- Area Scan (71x121x1): Interpolated grid: dx=1.500 mm, dy=1.500 mm
Maximum value of SAR (interpolated) = 0.197 W/kg

- Zoom Scan (5x5x7)/Cube 0: Measurement grid: dx=8mm, dy=8mm, dz=5mm
Reference Value = 14.30 V/m; Power Drift = -0.08 dB
Peak SAR (extrapolated) = 0.202 W/kg
SAR(1 g) = 0.157 W/kg; SAR(10 g) = 0.125 W/kg
Maximum value of SAR (measured) = 0.181 W/kg

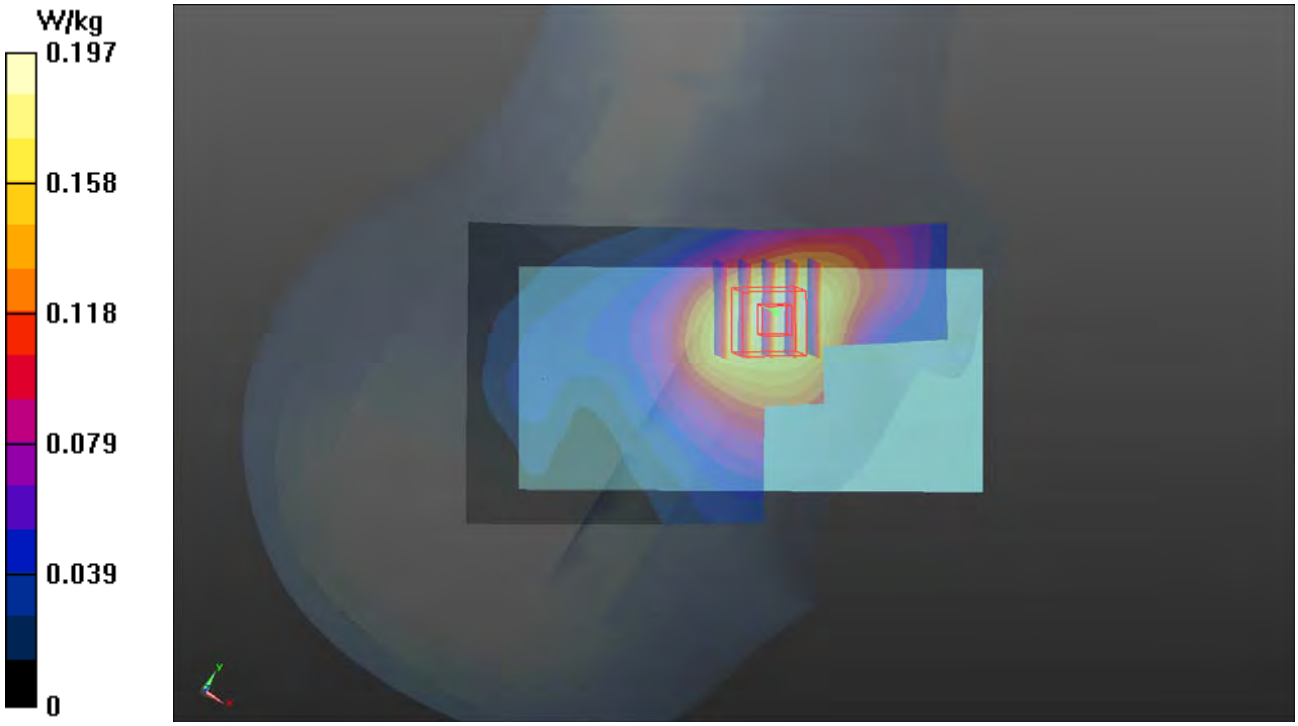

P06 LTE 2_QPSK20M_Left Cheek_Ch18700_1RB_OS0

DUT: 170425C26

Communication System: LTE; Frequency: 1860 MHz;Duty Cycle: 1:1
Medium: H16T20N1_0712 Medium parameters used: f = 1860 MHz; σ = 1.424 S/m; ε_r = 39.708; ρ = 1000 kg/m^3
Ambient Temperature：23.8 ℃ ; Liquid Temperature：23.3 ℃

DASY5 Configuration:
- Probe: EX3DV4 - SN3753; ConvF(7.79, 7.79, 7.79); Calibrated: 2017/05/05;
- Sensor-Surface: 1.4mm (Mechanical Surface Detection)
- Electronics: DAE4 Sn916; Calibrated: 2016/12/15
- Phantom: Twin SAM Phantom_1485; Type: QD000P40;
- Measurement SW: DASY52, Version 52.8 (8); SEMCAD X Version 14.6.10 (7373)

- Area Scan (71x121x1): Interpolated grid: dx=1.500 mm, dy=1.500 mm
Maximum value of SAR (interpolated) = 0.0336 W/kg

- Zoom Scan (5x5x7)/Cube 0: Measurement grid: dx=8mm, dy=8mm, dz=5mm
Reference Value = 4.332 V/m; Power Drift = -0.17 dB
Peak SAR (extrapolated) = 0.0290 W/kg
SAR(1 g) = 0.017 W/kg; SAR(10 g) = 0.011 W/kg
Maximum value of SAR (measured) = 0.0248 W/kg

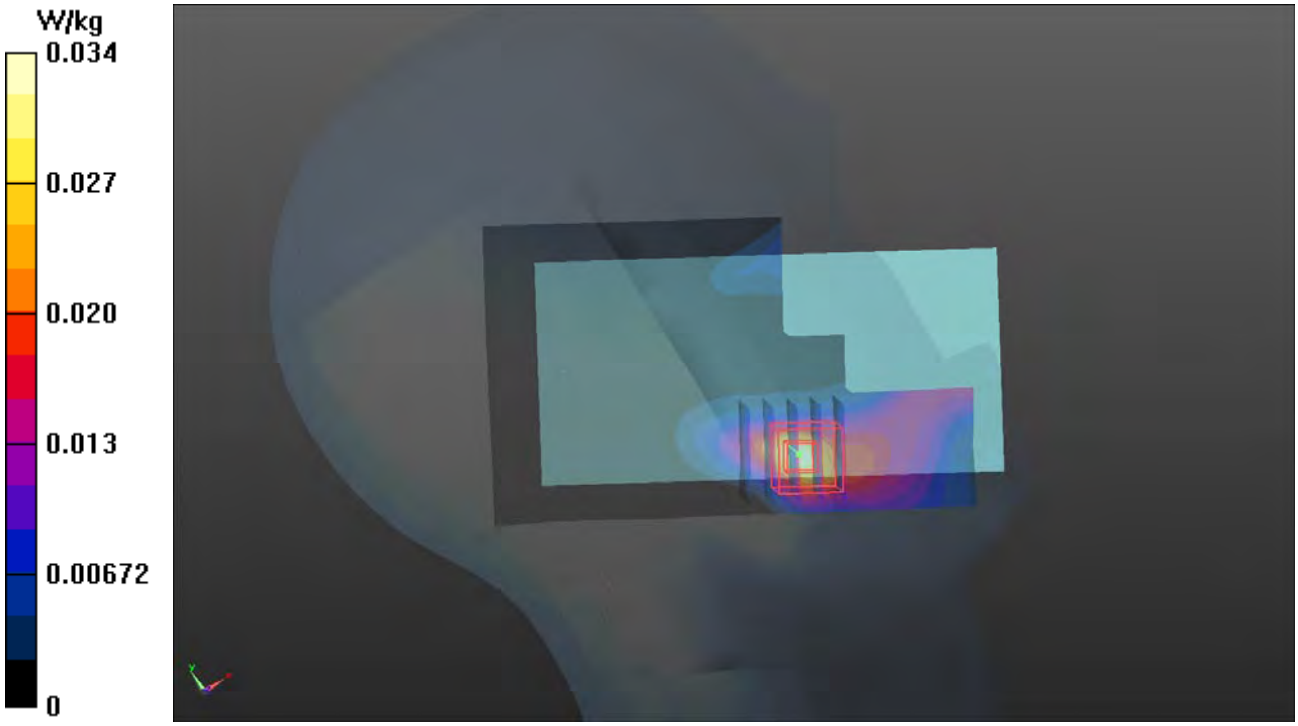

P07 LTE 4_QPSK20M_Left Cheek_Ch20175_1RB_OS0

DUT: 170425C26

Communication System: LTE; Frequency: 1732.5 MHz;Duty Cycle: 1:1
Medium: H16T20N1_0712 Medium parameters used: f = 1732.5 MHz; σ = 1.312 S/m; ε_r = 40.209; ρ = 1000 kg/m^3
Ambient Temperature：23.8 ℃ ; Liquid Temperature：23.2 ℃

DASY5 Configuration:
- Probe: EX3DV4 - SN3753; ConvF(8.16, 8.16, 8.16); Calibrated: 2017/05/05;
- Sensor-Surface: 1.4mm (Mechanical Surface Detection)
- Electronics: DAE4 Sn916; Calibrated: 2016/12/15
- Phantom: Twin SAM Phantom_1485; Type: QD000P40;
- Measurement SW: DASY52, Version 52.8 (8); SEMCAD X Version 14.6.10 (7373)

- Area Scan (71x121x1): Interpolated grid: dx=1.500 mm, dy=1.500 mm
Maximum value of SAR (interpolated) = 0.0661 W/kg

- Zoom Scan (5x5x7)/Cube 0: Measurement grid: dx=8mm, dy=8mm, dz=5mm
Reference Value = 7.060 V/m; Power Drift = -0.05 dB
Peak SAR (extrapolated) = 0.0710 W/kg
SAR(1 g) = 0.047 W/kg; SAR(10 g) = 0.029 W/kg
Maximum value of SAR (measured) = 0.0622 W/kg

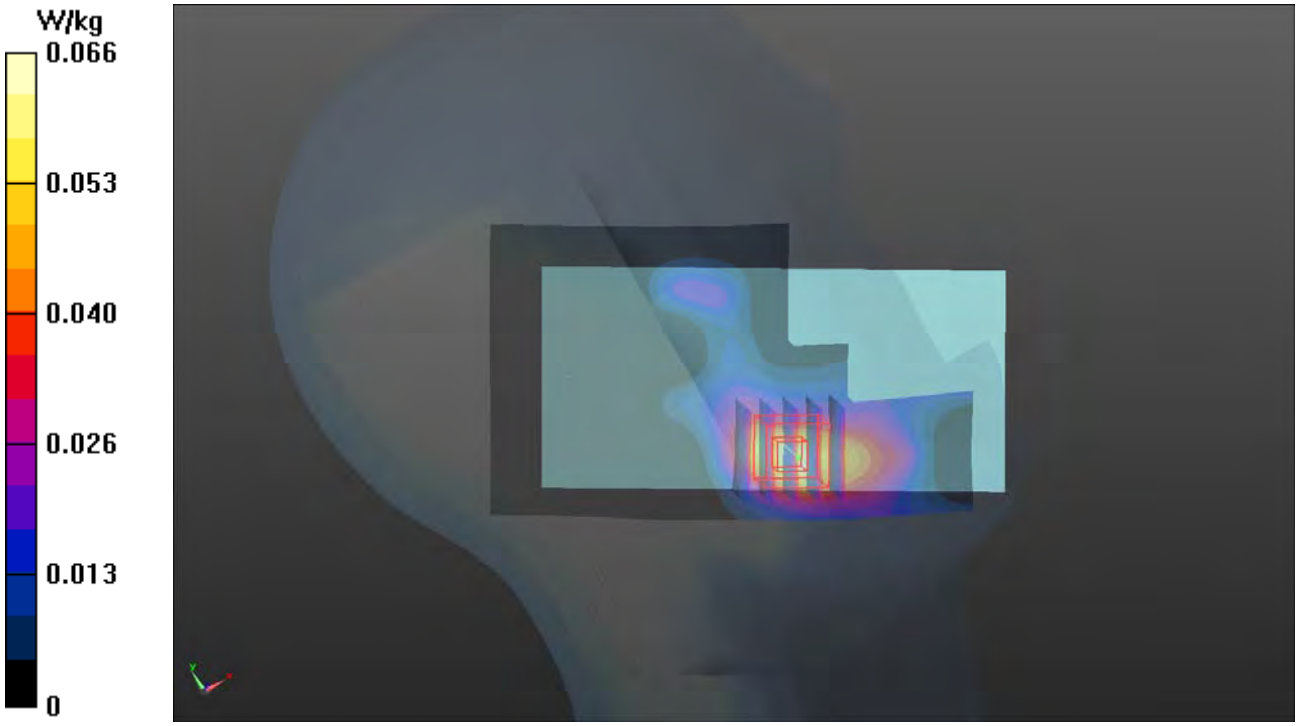

P08 LTE 5_QPSK10M_Right Cheek_Ch20450_1RB_OS0

DUT: 170425C26

Communication System: LTE; Frequency: 829 MHz;Duty Cycle: 1:1
Medium: H07T10N1_0712 Medium parameters used: f = 829 MHz; σ = 0.915 S/m; ε_r = 42.404; ρ = 1000 kg/m^3
Ambient Temperature：23.7 ℃ ; Liquid Temperature：23.3 ℃

DASY5 Configuration:
- Probe: EX3DV4 - SN3753; ConvF(9.13, 9.13, 9.13); Calibrated: 2017/05/05;
- Sensor-Surface: 1.4mm (Mechanical Surface Detection)
- Electronics: DAE4 Sn916; Calibrated: 2016/12/15
- Phantom: Twin SAM Phantom_1485; Type: QD000P40;
- Measurement SW: DASY52, Version 52.8 (8); SEMCAD X Version 14.6.10 (7373)

- Area Scan (71x121x1): Interpolated grid: dx=1.500 mm, dy=1.500 mm
Maximum value of SAR (interpolated) = 0.225 W/kg

- Zoom Scan (5x5x7)/Cube 0: Measurement grid: dx=8mm, dy=8mm, dz=5mm
Reference Value = 15.11 V/m; Power Drift = 0.00 dB
Peak SAR (extrapolated) = 0.228 W/kg
SAR(1 g) = 0.175 W/kg; SAR(10 g) = 0.138 W/kg
Maximum value of SAR (measured) = 0.203 W/kg

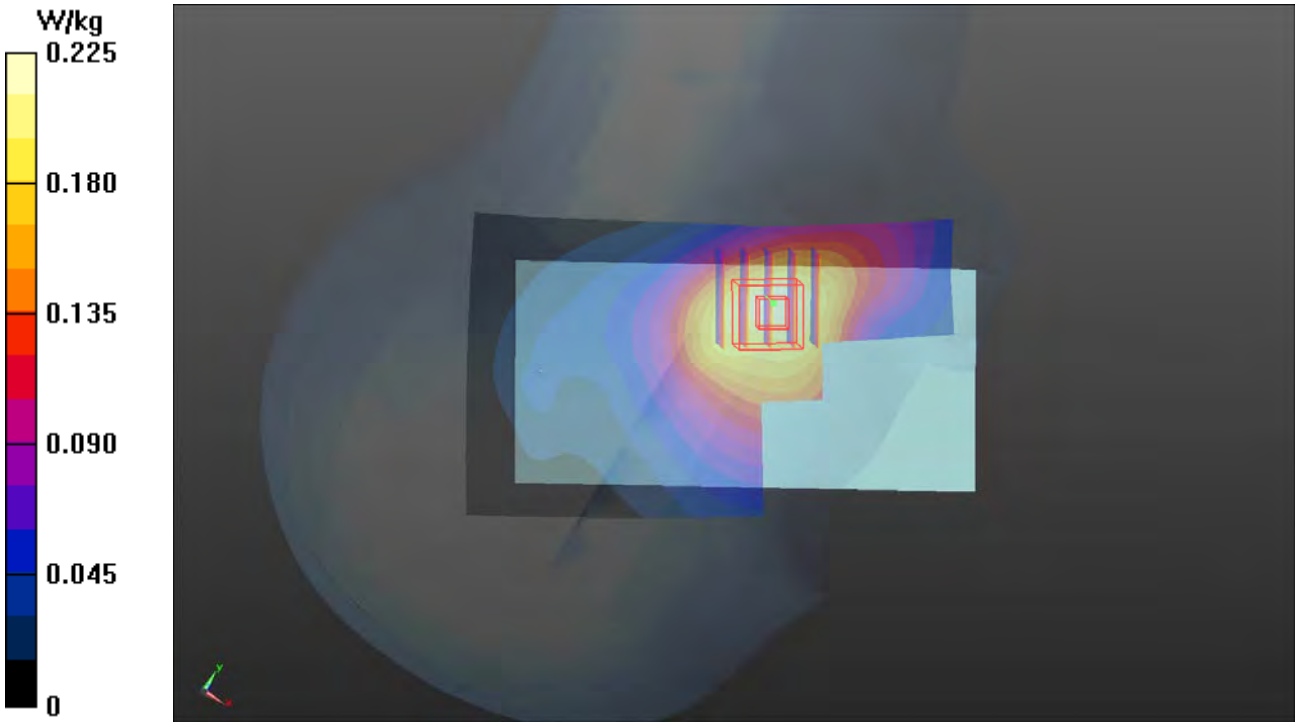

P09 LTE 7_QPSK20M_Left Cheek_Ch21100_1RB_OS0

DUT: 170425C26

Communication System: LTE; Frequency: 2535 MHz;Duty Cycle: 1:1
Medium: H19T27N3_0713 Medium parameters used: f = 2535 MHz; σ = 1.984 S/m; ε_r = 39.69; ρ = 1000 kg/m^3
Ambient Temperature：23.9 ℃ ; Liquid Temperature：23.4 ℃

DASY5 Configuration:
- Probe: EX3DV4 - SN7351; ConvF(7.43, 7.43, 7.43); Calibrated: 2016/12/20;
- Sensor-Surface: 1.4mm (Mechanical Surface Detection)
- Electronics: DAE4 Sn1431; Calibrated: 2017/03/20
- Phantom: Twin SAM Phantom_1654; Type: QD000P40;
- Measurement SW: DASY52, Version 52.8 (8); SEMCAD X Version 14.6.10 (7373)

- Area Scan (91x151x1): Interpolated grid: dx=1.200 mm, dy=1.200 mm
Maximum value of SAR (interpolated) = 0.131 W/kg

- Zoom Scan (5x5x7)/Cube 0: Measurement grid: dx=8mm, dy=8mm, dz=5mm
Reference Value = 7.873 V/m; Power Drift = -0.06 dB
Peak SAR (extrapolated) = 0.139 W/kg
SAR(1 g) = 0.082 W/kg; SAR(10 g) = 0.034 W/kg
Maximum value of SAR (measured) = 0.124 W/kg

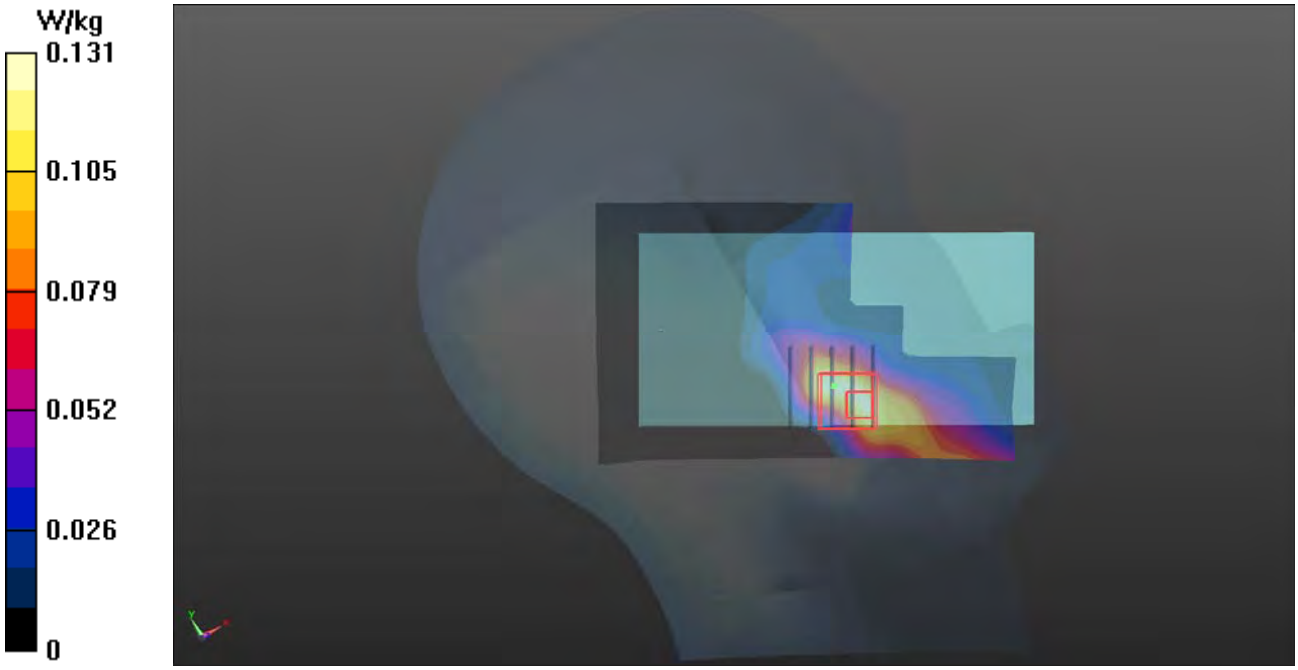

P10 LTE 12_QPSK10M_Left Tilted_Ch23095_1RB_OS0

DUT: 170425C26

Communication System: LTE; Frequency: 707.5 MHz;Duty Cycle: 1:1
Medium: H06T09N1_0712 Medium parameters used: f = 707.5 MHz; σ = 0.853 S/m; ε_r = 43.374; ρ = 1000 kg/m^3
Ambient Temperature：23.7 ℃ ; Liquid Temperature：23.3 ℃

DASY5 Configuration:
- Probe: EX3DV4 - SN3753; ConvF(9.42, 9.42, 9.42); Calibrated: 2017/05/05;
- Sensor-Surface: 1.4mm (Mechanical Surface Detection)
- Electronics: DAE4 Sn916; Calibrated: 2016/12/15
- Phantom: Twin SAM Phantom_1485; Type: QD000P40;
- Measurement SW: DASY52, Version 52.8 (8); SEMCAD X Version 14.6.10 (7373)

- Area Scan (71x121x1): Interpolated grid: dx=1.500 mm, dy=1.500 mm
Maximum value of SAR (interpolated) = 0.118 W/kg

- Zoom Scan (5x5x7)/Cube 0: Measurement grid: dx=8mm, dy=8mm, dz=5mm
Reference Value = 11.17 V/m; Power Drift = 0.13 dB
Peak SAR (extrapolated) = 0.138 W/kg
SAR(1 g) = 0.064 W/kg; SAR(10 g) = 0.040 W/kg
Maximum value of SAR (measured) = 0.0991 W/kg

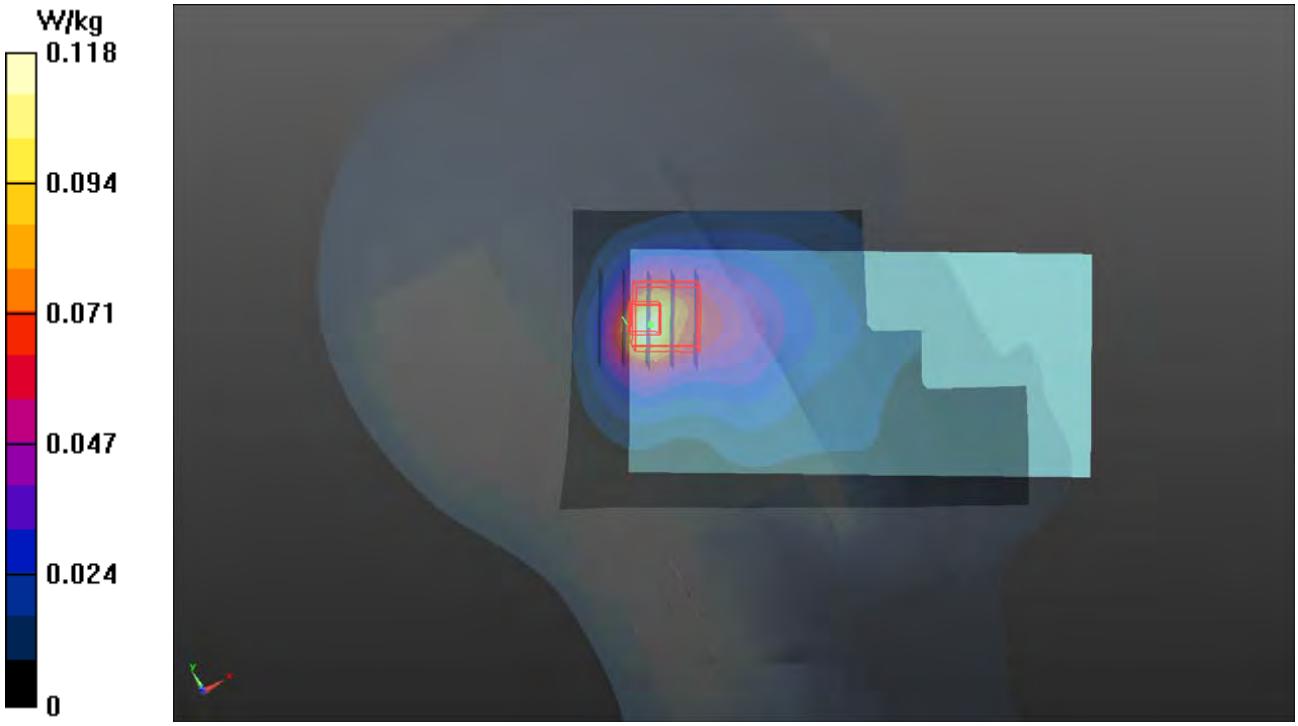

P11 LTE 17_QPSK10M_Left Tilted_Ch23790_1RB_OS0

DUT: 170425C26

Communication System: LTE; Frequency: 710 MHz;Duty Cycle: 1:1
Medium: H06T09N1_0712 Medium parameters used: f = 710 MHz; σ = 0.855 S/m; ε_r = 43.335; ρ = 1000 kg/m^3
Ambient Temperature：23.7 ℃ ; Liquid Temperature：23.3 ℃

DASY5 Configuration:
- Probe: EX3DV4 - SN3753; ConvF(9.42, 9.42, 9.42); Calibrated: 2017/05/05;
- Sensor-Surface: 1.4mm (Mechanical Surface Detection)
- Electronics: DAE4 Sn916; Calibrated: 2016/12/15
- Phantom: Twin SAM Phantom_1485; Type: QD000P40;
- Measurement SW: DASY52, Version 52.8 (8); SEMCAD X Version 14.6.10 (7373)

- Area Scan (71x121x1): Interpolated grid: dx=1.500 mm, dy=1.500 mm
Maximum value of SAR (interpolated) = 0.127 W/kg

- Zoom Scan (5x5x7)/Cube 0: Measurement grid: dx=8mm, dy=8mm, dz=5mm
Reference Value = 11.63 V/m; Power Drift = 0.12 dB
Peak SAR (extrapolated) = 0.153 W/kg
SAR(1 g) = 0.072 W/kg; SAR(10 g) = 0.045 W/kg
Maximum value of SAR (measured) = 0.111 W/kg

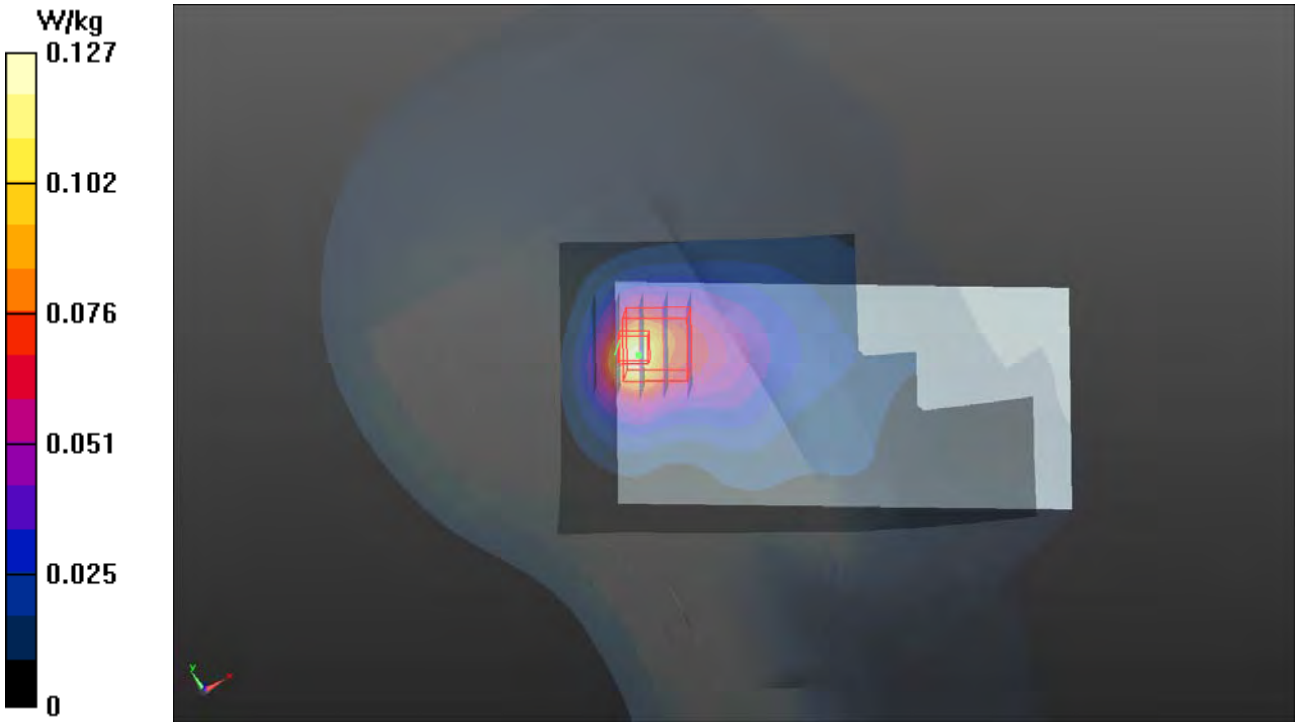

P12 2.4G WLAN_802.11b_Right Cheek_Ch6

DUT: 170425C26

Communication System: WLAN_2.4G; Frequency: 2437 MHz;Duty Cycle: 1:1
Medium: H19T27N3_0713 Medium parameters used: f = 2437 MHz; σ = 1.875 S/m; ε_r = 40.018; ρ = 1000 kg/m^3
Ambient Temperature：23.9 ℃ ; Liquid Temperature：23.4 ℃

DASY5 Configuration:
- Probe: EX3DV4 - SN7351; ConvF(7.64, 7.64, 7.64); Calibrated: 2016/12/20;
- Sensor-Surface: 1.4mm (Mechanical Surface Detection)
- Electronics: DAE4 Sn1431; Calibrated: 2017/03/20
- Phantom: Twin SAM Phantom_1654; Type: QD000P40;
- Measurement SW: DASY52, Version 52.8 (8); SEMCAD X Version 14.6.10 (7373)

- Area Scan (91x151x1): Interpolated grid: dx=1.200 mm, dy=1.200 mm
Maximum value of SAR (interpolated) = 1.33 W/kg

- Zoom Scan (5x5x7)/Cube 0: Measurement grid: dx=8mm, dy=8mm, dz=5mm
Reference Value = 22.04 V/m; Power Drift = -0.01 dB
Peak SAR (extrapolated) = 2.22 W/kg
SAR(1 g) = 1.01 W/kg; SAR(10 g) = 0.424 W/kg
Maximum value of SAR (measured) = 1.64 W/kg

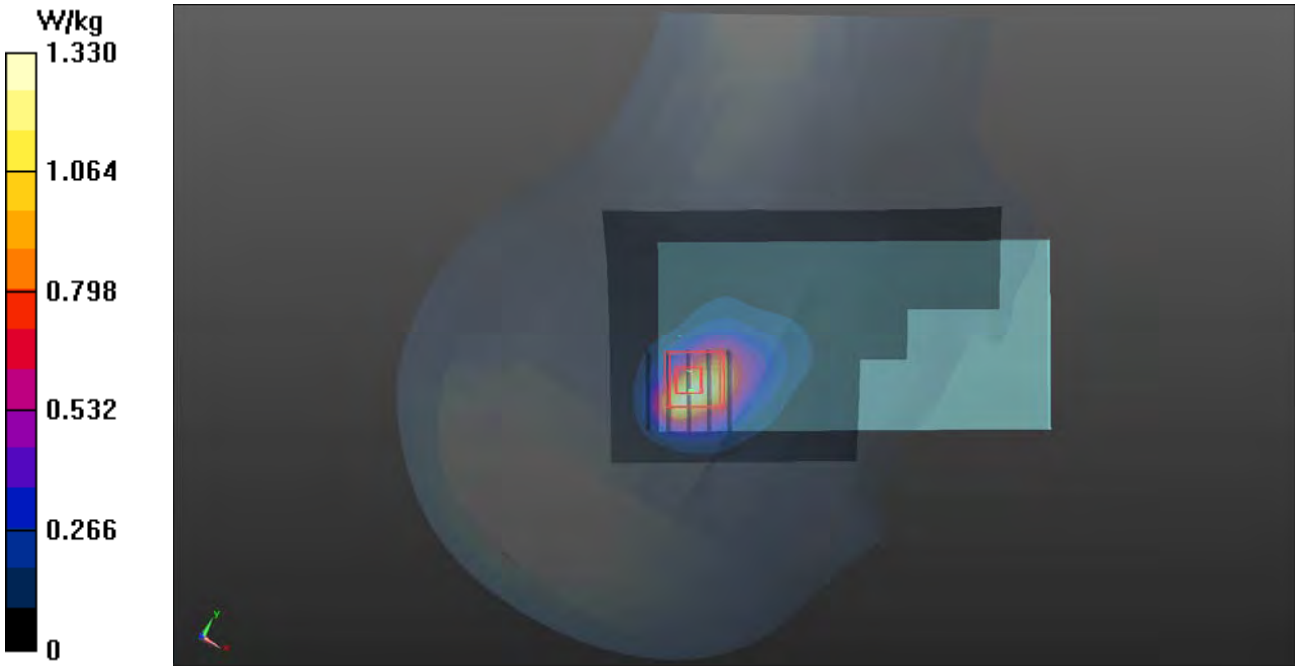

P13 5.3G WLAN_802.11n HT40_Right Cheek_Ch62

DUT: 170425C26

Communication System: WLAN_5G; Frequency: 5310 MHz;Duty Cycle: 1:1
Medium: H34T60N2_0713 Medium parameters used: f = 5310 MHz; σ = 4.686 S/m; ε_r = 34.509; ρ = 1000 kg/m^3
Ambient Temperature：23.3 ℃ ; Liquid Temperature：23.2 ℃

DASY5 Configuration:
- Probe: EX3DV4 - SN3753; ConvF(5.25, 5.25, 5.25); Calibrated: 2017/05/05;
- Sensor-Surface: 1.4mm (Mechanical Surface Detection)
- Electronics: DAE4 Sn916; Calibrated: 2016/12/15
- Phantom: Twin SAM Phantom_1823; Type: QD000P40CD;
- Measurement SW: DASY52, Version 52.8 (8); SEMCAD X Version 14.6.10 (7373)

- Area Scan (101x181x1): Interpolated grid: dx=1.000 mm, dy=1.000 mm
Maximum value of SAR (interpolated) = 2.30 W/kg

- Zoom Scan (6x6x12)/Cube 0: Measurement grid: dx=5mm, dy=5mm, dz=2mm
Reference Value = 20.45 V/m; Power Drift = 0.17dB
Peak SAR (extrapolated) = 6.02 W/kg
SAR(1 g) = 1.05 W/kg; SAR(10 g) = 0.256 W/kg
Maximum value of SAR (measured) = 2.80 W/kg

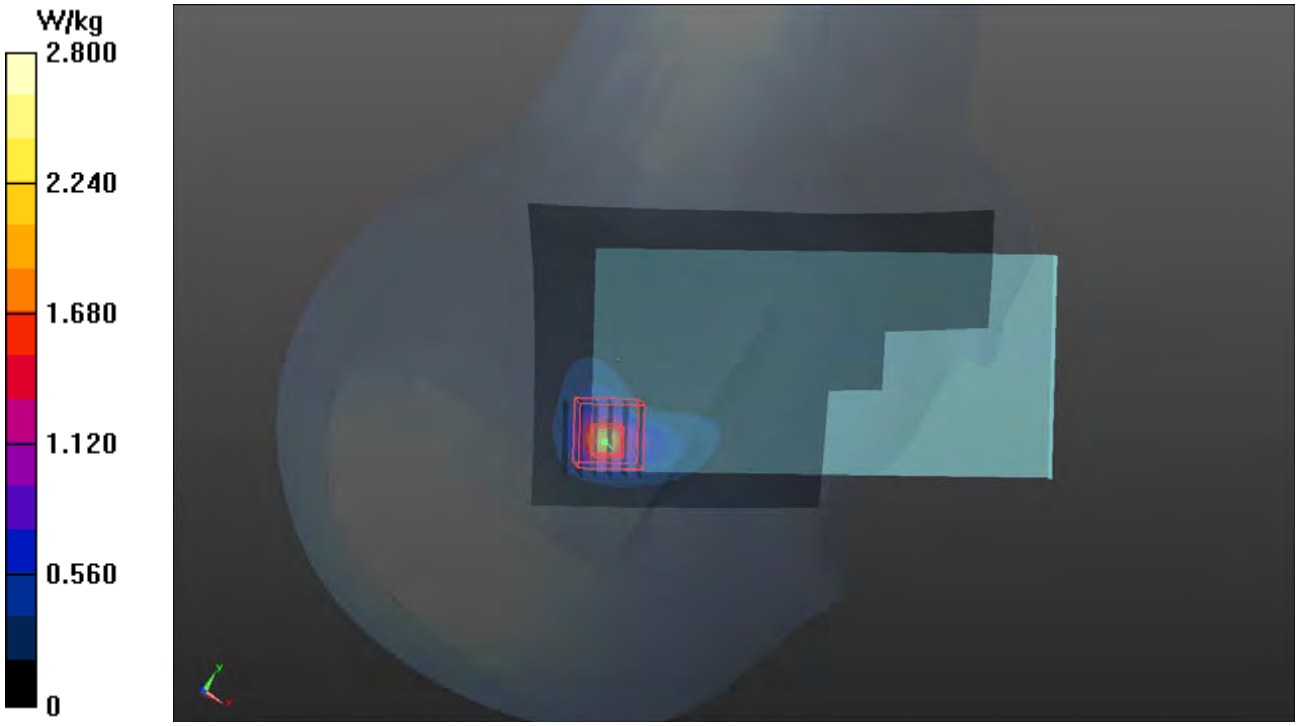

P14 5.6G WLAN_802.11n HT40_Right Cheek_Ch110

DUT: 170425C26

Communication System: WLAN_5G; Frequency: 5550 MHz;Duty Cycle: 1:1
Medium: H34T60N2_0713 Medium parameters used: f = 5550 MHz; σ = 4.93 S/m; ε_r = 34.183; ρ = 1000 kg/m^3
Ambient Temperature：23.3 ℃ ; Liquid Temperature：23.2 ℃

DASY5 Configuration:
- Probe: EX3DV4 - SN3753; ConvF(4.75, 4.75, 4.75); Calibrated: 2017/05/05;
- Sensor-Surface: 1.4mm (Mechanical Surface Detection)
- Electronics: DAE4 Sn916; Calibrated: 2016/12/15
- Phantom: Twin SAM Phantom_1823; Type: QD000P40CD;
- Measurement SW: DASY52, Version 52.8 (8); SEMCAD X Version 14.6.10 (7373)

- Area Scan (101x181x1): Interpolated grid: dx=1.000 mm, dy=1.000 mm
Maximum value of SAR (interpolated) = 1.91 W/kg

- Zoom Scan (6x6x12)/Cube 0: Measurement grid: dx=5mm, dy=5mm, dz=2mm
Reference Value = 17.74 V/m; Power Drift = 0.13 dB
Peak SAR (extrapolated) = 5.50 W/kg
SAR(1 g) = 1.01 W/kg; SAR(10 g) = 0.247 W/kg
Maximum value of SAR (measured) = 3.01 W/kg

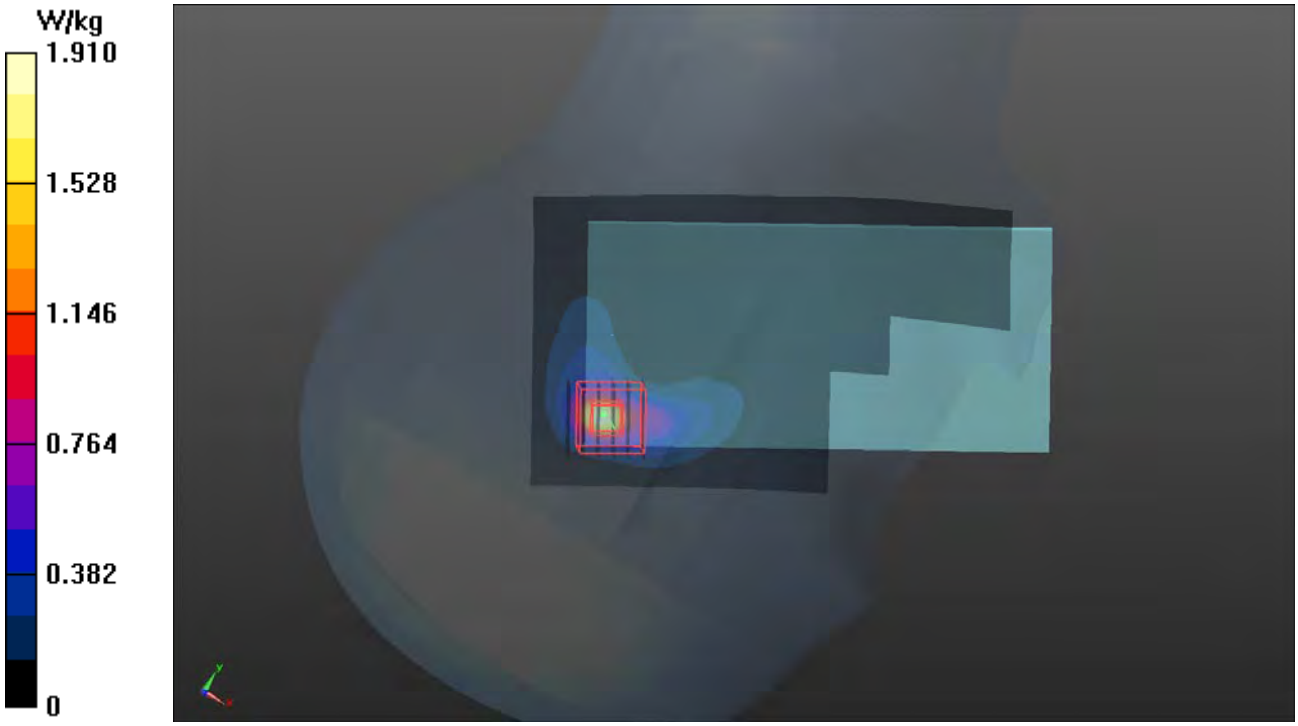

P15 5.8G WLAN_802.11n HT40_Right Cheek_Ch159

DUT: 170425C26

Communication System: WLAN_5G; Frequency: 5795 MHz;Duty Cycle: 1:1
Medium: H34T60N2_0713 Medium parameters used: f = 5795 MHz; σ = 5.175 S/m; ε_r = 33.874; ρ = 1000 kg/m^3
Ambient Temperature：23.8 ℃ ; Liquid Temperature：23.2 ℃

DASY5 Configuration:
- Probe: EX3DV4 - SN3753; ConvF(4.76, 4.76, 4.76); Calibrated: 2017/05/05;
- Sensor-Surface: 1.4mm (Mechanical Surface Detection)
- Electronics: DAE4 Sn916; Calibrated: 2016/12/15
- Phantom: Twin SAM Phantom_1823; Type: QD000P40CD;
- Measurement SW: DASY52, Version 52.8 (8); SEMCAD X Version 14.6.10 (7373)

- Area Scan (101x181x1): Interpolated grid: dx=1.000 mm, dy=1.000 mm
Maximum value of SAR (interpolated) = 1.55 W/kg

- Zoom Scan (6x6x12)/Cube 0: Measurement grid: dx=5mm, dy=5mm, dz=2mm
Reference Value = 14.93 V/m; Power Drift = -0.10 dB
Peak SAR (extrapolated) = 5.68 W/kg
SAR(1 g) = 1.01 W/kg; SAR(10 g) = 0.249 W/kg
Maximum value of SAR (measured) = 2.69 W/kg

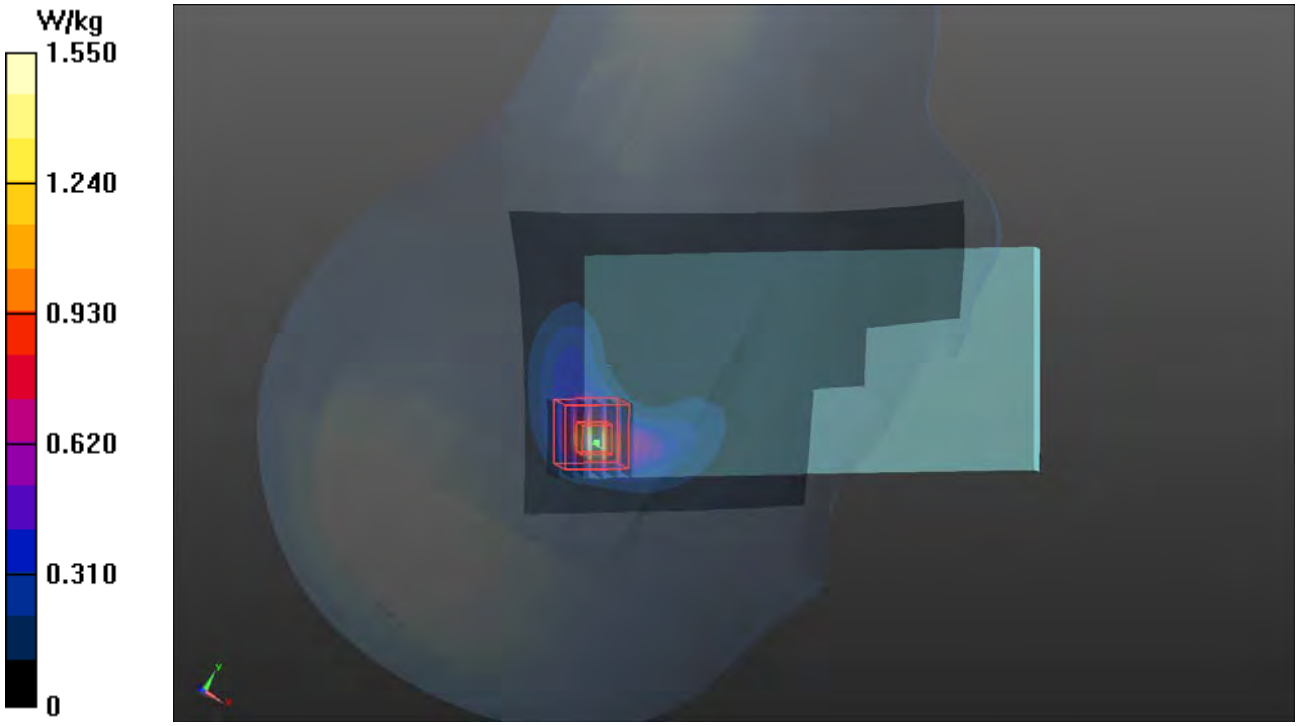

P16 GSM850_GPRS10_Front Face_1cm_Ch128

DUT: 170425C26

Communication System: GPRS10; Frequency: 824.2 MHz;Duty Cycle: 1:4
Medium: B07T10N3_0712 Medium parameters used: f = 824.2 MHz; σ = 0.992 S/m; ε_r = 54.335; ρ = 1000 kg/m^3
Ambient Temperature：24.1 ℃ ; Liquid Temperature：23.6 ℃

DASY5 Configuration:
- Probe: EX3DV4 - SN3753; ConvF(9.21, 9.21, 9.21); Calibrated: 2017/05/05;
- Sensor-Surface: 1.4mm (Mechanical Surface Detection)
- Electronics: DAE4 Sn916; Calibrated: 2016/12/15
- Phantom: Twin SAM Phantom_1485; Type: QD000P40;
- Measurement SW: DASY52, Version 52.8 (8); SEMCAD X Version 14.6.10 (7373)

-Area Scan (71x121x1): Interpolated grid: dx=1.500 mm, dy=1.500 mm
Maximum value of SAR (interpolated) = 0.917 W/kg

- Zoom Scan (5x5x7)/Cube 0: Measurement grid: dx=8mm, dy=8mm, dz=5mm
Reference Value = 28.28 V/m; Power Drift = -0.01 dB
Peak SAR (extrapolated) = 1.17 W/kg
SAR(1 g) = 0.672 W/kg; SAR(10 g) = 0.373 W/kg
Maximum value of SAR (measured) = 0.951 W/kg

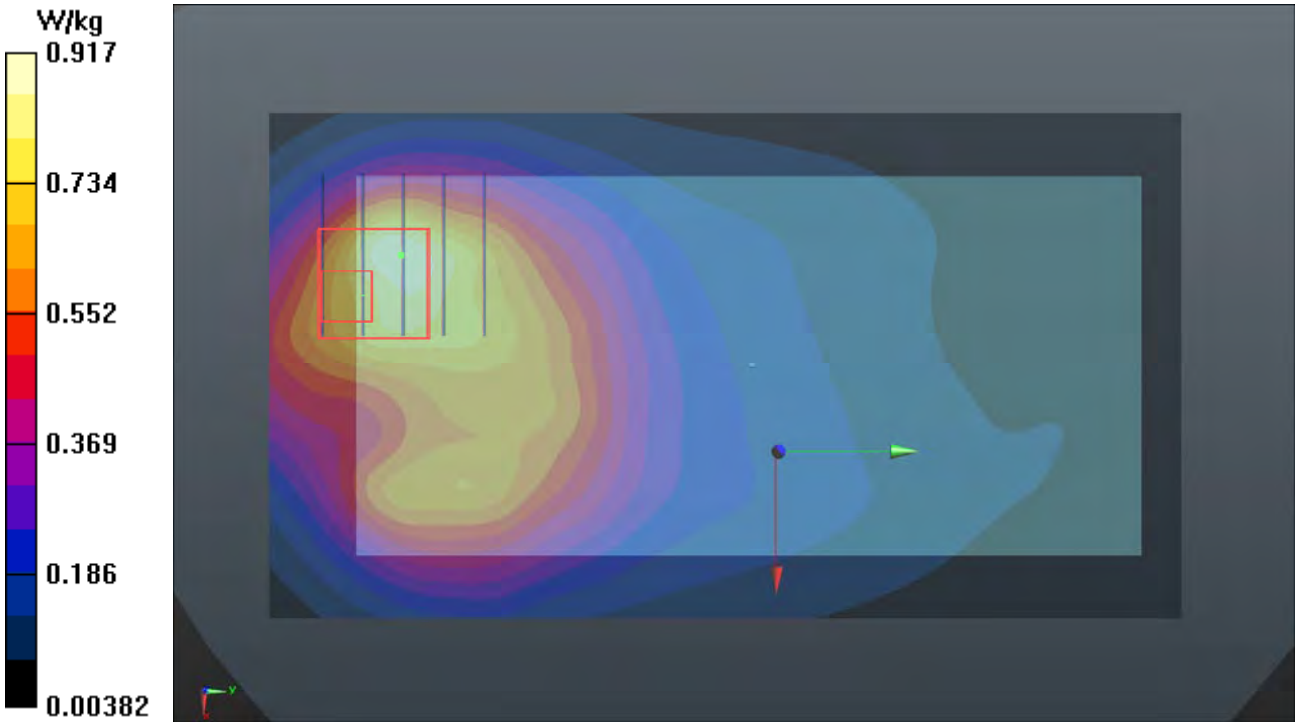

P17 GSM1900_GPRS10_Front Face_1cm_Ch661

DUT: 170425C26

Communication System: GPRS10; Frequency: 1880 MHz;Duty Cycle: 1:4
Medium: B16T20N1_0712 Medium parameters used: f = 1880 MHz; σ = 1.571 S/m; ε_r = 52.848; ρ = 1000 kg/m^3
Ambient Temperature：23.6 ℃ ; Liquid Temperature：23.2 ℃

DASY5 Configuration:
- Probe: ET3DV6 - SN1790; ConvF(4.88, 4.88, 4.88); Calibrated: 2017/05/24;
- Sensor-Surface: 4mm (Mechanical Surface Detection)
- Electronics: DAE4 Sn861; Calibrated: 2017/05/22
- Phantom: Twin SAM Phantom_1823; Type: QD000P40CD;
- Measurement SW: DASY52, Version 52.8 (8); SEMCAD X Version 14.6.10 (7373)

- Area Scan (71x121x1): Interpolated grid: dx=1.500 mm, dy=1.500 mm
Maximum value of SAR (interpolated) = 0.484 W/kg

- Zoom Scan (5x5x7)/Cube 0: Measurement grid: dx=8mm, dy=8mm, dz=5mm
Reference Value = 18.32 V/m; Power Drift = -0.03 dB
Peak SAR (extrapolated) = 0.925 W/kg
SAR(1 g) = 0.458 W/kg; SAR(10 g) = 0.230 W/kg
Maximum value of SAR (measured) = 0.482 W/kg

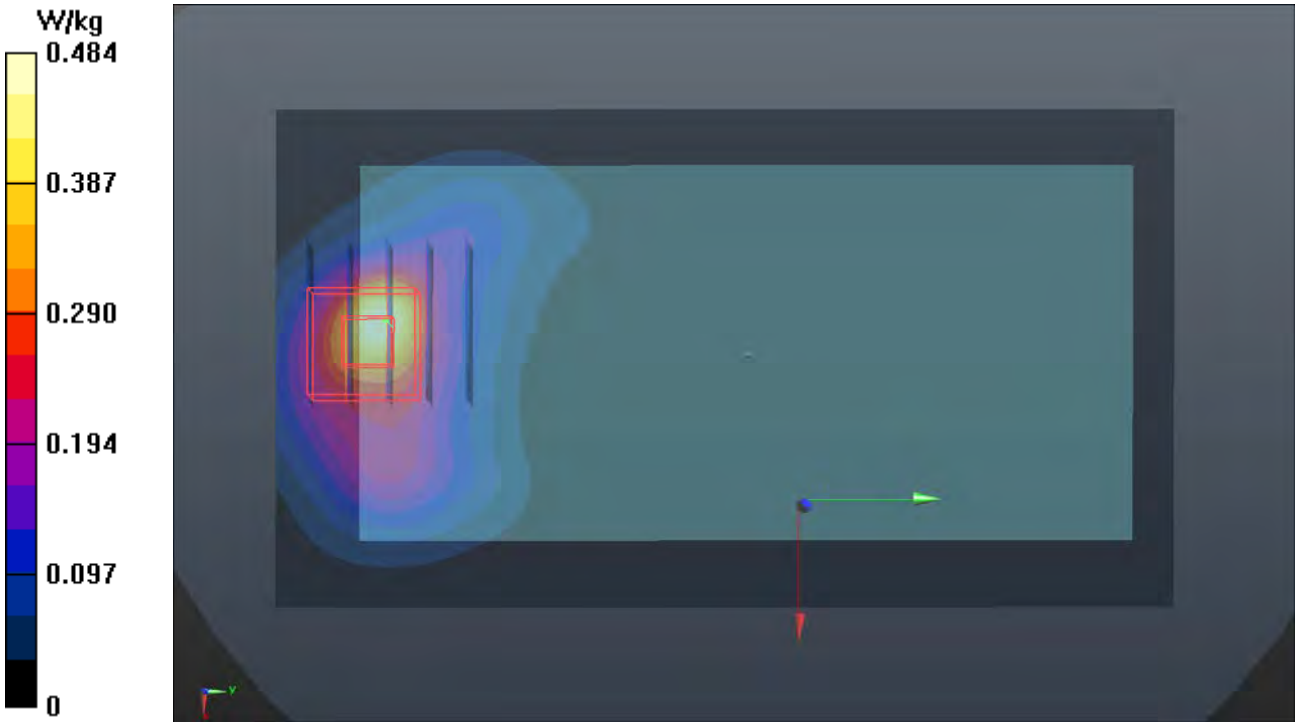

P18 WCDMA II_RMC12.2K_Front Face_1cm_Ch9400

DUT: 170425C26

Communication System: WCDMA; Frequency: 1880 MHz;Duty Cycle: 1:1
Medium: B16T20N1_0712 Medium parameters used: f = 1880 MHz; σ = 1.571 S/m; ε_r = 52.848; ρ = 1000 kg/m^3
Ambient Temperature：23.6 ℃ ; Liquid Temperature：23.2 ℃

DASY5 Configuration:
- Probe: ET3DV6 - SN1790; ConvF(4.88, 4.88, 4.88); Calibrated: 2017/05/24;
- Sensor-Surface: 4mm (Mechanical Surface Detection)
- Electronics: DAE4 Sn861; Calibrated: 2017/05/22
- Phantom: Twin SAM Phantom_1823; Type: QD000P40CD;
- Measurement SW: DASY52, Version 52.8 (8); SEMCAD X Version 14.6.10 (7373)

- Area Scan (71x121x1): Interpolated grid: dx=1.500 mm, dy=1.500 mm
Maximum value of SAR (interpolated) = 0.539 W/kg

- Zoom Scan (5x5x7)/Cube 0: Measurement grid: dx=8mm, dy=8mm, dz=5mm
Reference Value = 19.93 V/m; Power Drift = 0.10 dB
Peak SAR (extrapolated) = 1.07 W/kg
SAR(1 g) = 0.612 W/kg; SAR(10 g) = 0.307 W/kg
Maximum value of SAR (measured) = 0.688 W/kg

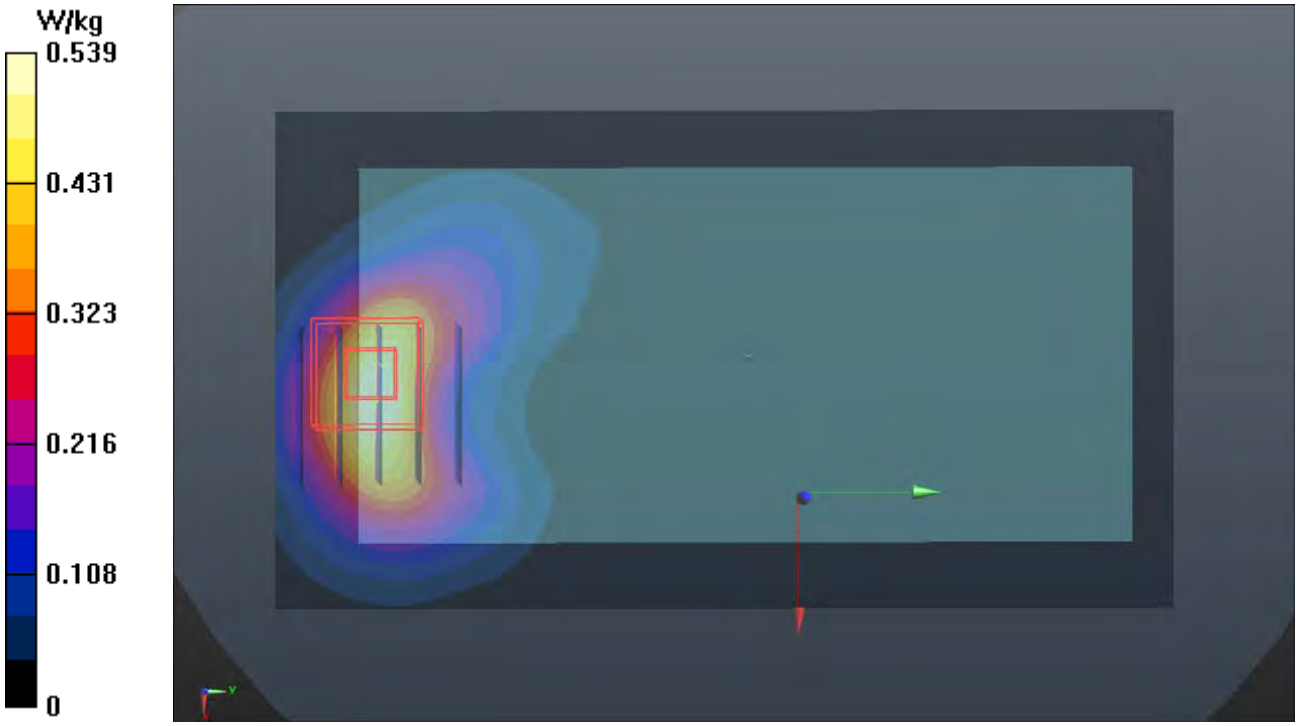

P19 WCDMA IV_RMC12.2K_Front Face_1cm_Ch1312

DUT: 170425C26

Communication System: WCDMA; Frequency: 1712.4 MHz;Duty Cycle: 1:1
Medium: B16T20N2_0711 Medium parameters used: f = 1712.4 MHz; σ = 1.404 S/m; ε_r = 51.055; ρ = 1000 kg/m^3
Ambient Temperature：23.9 ℃ ; Liquid Temperature：23.6 ℃

DASY5 Configuration:
- Probe: EX3DV4 - SN3971; ConvF(8.51, 8.51, 8.51); Calibrated: 2017/03/24;
- Sensor-Surface: 1.4mm (Mechanical Surface Detection)
- Electronics: DAE3 Sn579; Calibrated: 2016/09/05
- Phantom: Twin SAM Phantom_1823; Type: QD000P40CD;
- Measurement SW: DASY52, Version 52.8 (8); SEMCAD X Version 14.6.10 (7373)

- Area Scan (71x141x1): Interpolated grid: dx=1.500 mm, dy=1.500 mm
Maximum value of SAR (interpolated) = 0.455 W/kg

- Zoom Scan (5x5x7)/Cube 0: Measurement grid: dx=8mm, dy=8mm, dz=5mm
Reference Value = 16.23 V/m; Power Drift = -0.04 dB
Peak SAR (extrapolated) = 0.782 W/kg
SAR(1 g) = 0.453 W/kg; SAR(10 g) = 0.236 W/kg
Maximum value of SAR (measured) = 0.656 W/kg

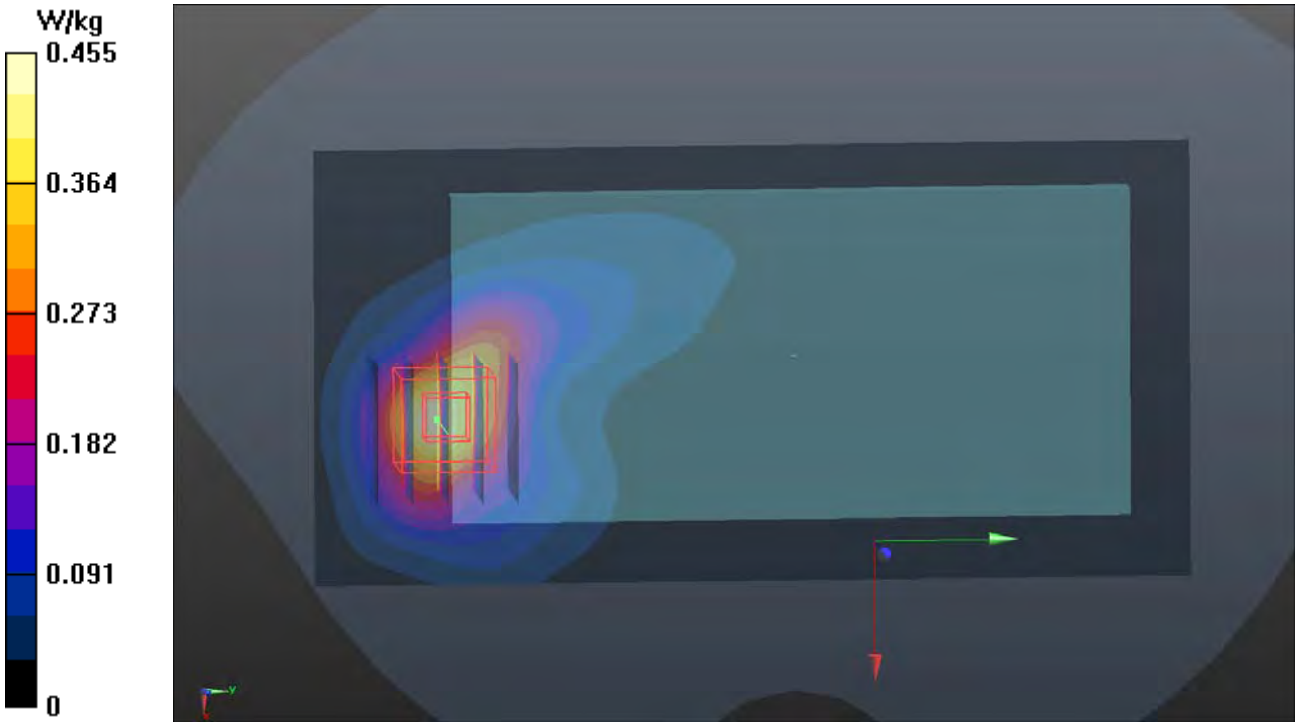

P20 WCDMA V_RMC12.2K_Rear Face_1cm_Ch4132

DUT: 170425C26

Communication System: WCDMA; Frequency: 826.4 MHz;Duty Cycle: 1:1
Medium: B07T10N3_0712 Medium parameters used: f = 826.4 MHz; σ = 0.994 S/m; ε_r = 54.314; ρ = 1000 kg/m^3
Ambient Temperature：23.9 ℃ ; Liquid Temperature：23.1 ℃

DASY5 Configuration:
- Probe: EX3DV4 - SN3753; ConvF(9.21, 9.21, 9.21); Calibrated: 2017/05/05;
- Sensor-Surface: 1.4mm (Mechanical Surface Detection)
- Electronics: DAE4 Sn916; Calibrated: 2016/12/15
- Phantom: Twin SAM Phantom_1485; Type: QD000P40;
- Measurement SW: DASY52, Version 52.8 (8); SEMCAD X Version 14.6.10 (7373)

- Area Scan (71x121x1): Interpolated grid: dx=1.500 mm, dy=1.500 mm
Maximum value of SAR (interpolated) = 0.551 W/kg

- Zoom Scan (5x5x7)/Cube 0: Measurement grid: dx=8mm, dy=8mm, dz=5mm
Reference Value = 23.66 V/m; Power Drift = -0.09 dB
Peak SAR (extrapolated) = 0.752 W/kg
SAR(1 g) = 0.433 W/kg; SAR(10 g) = 0.242 W/kg
Maximum value of SAR (measured) = 0.599 W/kg

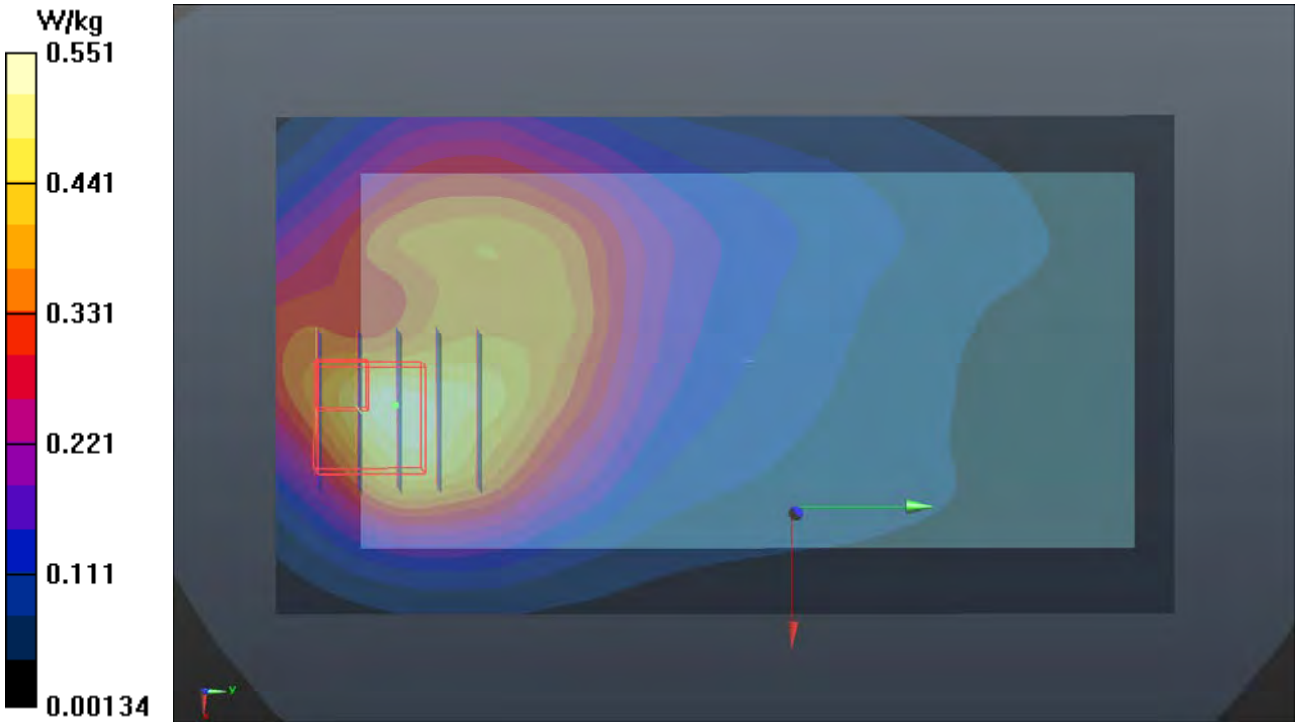

P21 LTE 2_QPSK20M_Front Face_1cm_Ch18700_1RB_OS0

DUT: 170425C26

Communication System: LTE; Frequency: 1860 MHz;Duty Cycle: 1:1
Medium: B16T20N1_0712 Medium parameters used: f = 1860 MHz; σ = 1.555 S/m; ε_r = 52.869; ρ = 1000 kg/m^3
Ambient Temperature：23.6 ℃ ; Liquid Temperature：23.2 ℃

DASY5 Configuration:
- Probe: ET3DV6 - SN1790; ConvF(4.88, 4.88, 4.88); Calibrated: 2017/05/24;
- Sensor-Surface: 4mm (Mechanical Surface Detection)
- Electronics: DAE4 Sn861; Calibrated: 2017/05/22
- Phantom: Twin SAM Phantom_1823; Type: QD000P40CD;
- Measurement SW: DASY52, Version 52.8 (8); SEMCAD X Version 14.6.10 (7373)

- Area Scan (71x121x1): Interpolated grid: dx=1.500 mm, dy=1.500 mm
Maximum value of SAR (interpolated) = 0.473 W/kg

- Zoom Scan (5x5x7)/Cube 0: Measurement grid: dx=8mm, dy=8mm, dz=5mm
Reference Value = 18.80 V/m; Power Drift = 0.11 dB
Peak SAR (extrapolated) = 0.951 W/kg
SAR(1 g) = 0.549 W/kg; SAR(10 g) = 0.278 W/kg
Maximum value of SAR (measured) = 0.589 W/kg

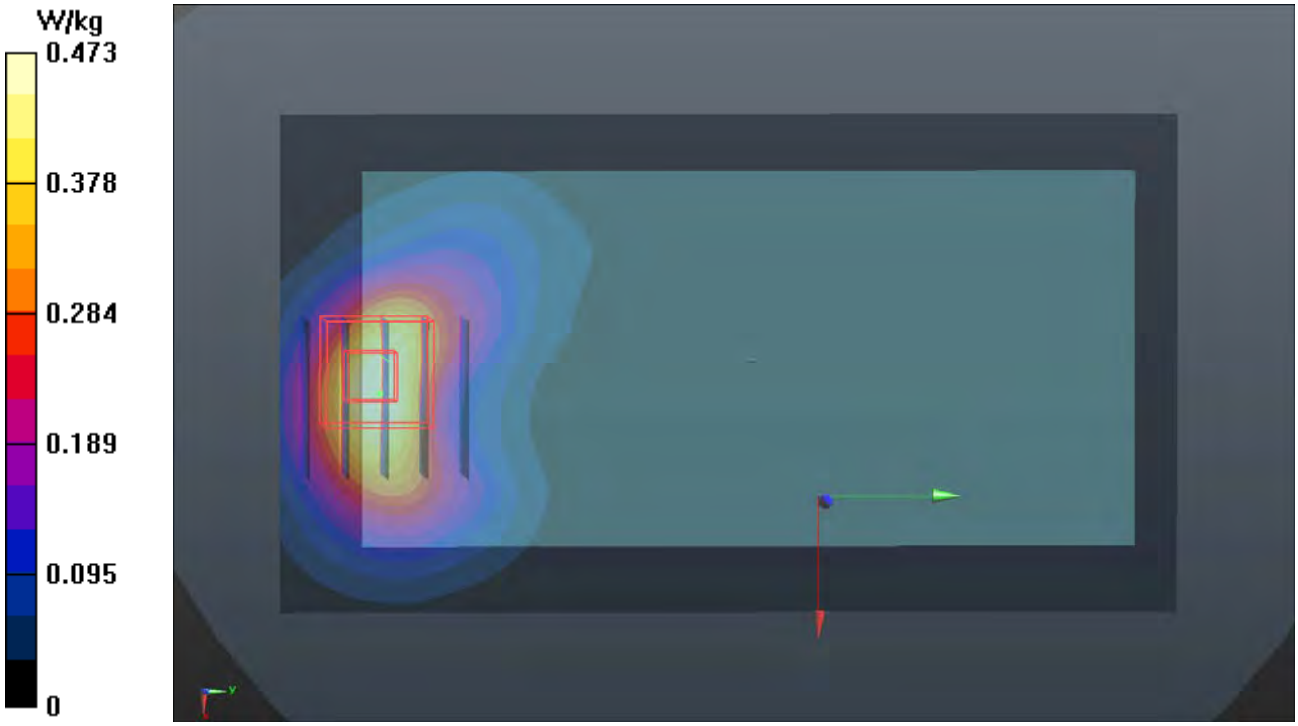

P22 LTE 4_QPSK20M_Front Face_1cm_Ch20175_1RB_OS0

DUT: 170425C26

Communication System: LTE; Frequency: 1732.5 MHz;Duty Cycle: 1:1
Medium: B16T20N1_0712 Medium parameters used: f = 1732.5 MHz; σ = 1.432 S/m; ε_r = 53.264; ρ = 1000 kg/m^3
Ambient Temperature：23.6 ℃ ; Liquid Temperature：23.2 ℃

DASY5 Configuration:
- Probe: ET3DV6 - SN1790; ConvF(5.13, 5.13, 5.13); Calibrated: 2017/05/24;
- Sensor-Surface: 4mm (Mechanical Surface Detection)
- Electronics: DAE4 Sn861; Calibrated: 2017/05/22
- Phantom: Twin SAM Phantom_1823; Type: QD000P40CD;
- Measurement SW: DASY52, Version 52.8 (8); SEMCAD X Version 14.6.10 (7373)

- Area Scan (71x121x1): Interpolated grid: dx=1.500 mm, dy=1.500 mm
Maximum value of SAR (interpolated) = 0.562 W/kg

- Zoom Scan (5x5x7)/Cube 0: Measurement grid: dx=8mm, dy=8mm, dz=5mm
Reference Value = 21.19 V/m; Power Drift = 0.10 dB
Peak SAR (extrapolated) = 0.939 W/kg
SAR(1 g) = 0.601 W/kg; SAR(10 g) = 0.322 W/kg
Maximum value of SAR (measured) = 0.671 W/kg

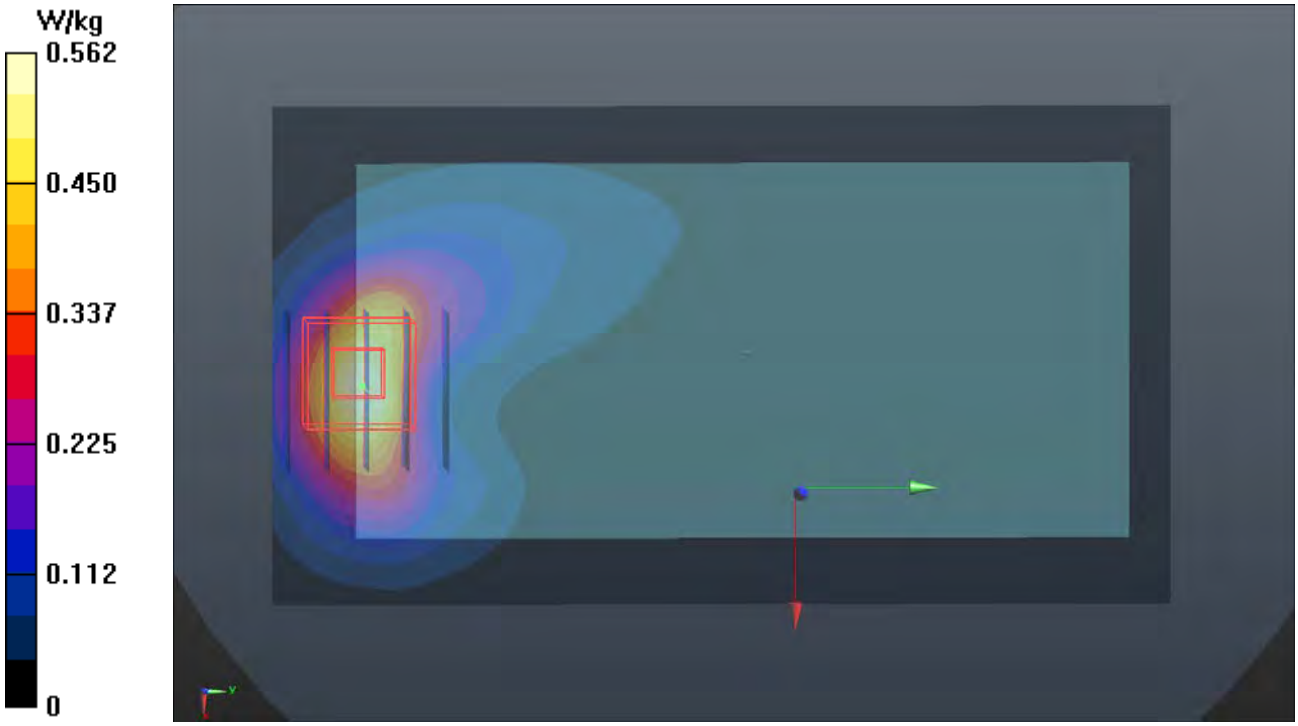

P23 LTE 5_QPSK10M_Rear Face_1cm_Ch20450_1RB_OS0

DUT: 170425C26

Communication System: LTE; Frequency: 829 MHz;Duty Cycle: 1:1
Medium: B07T10N3_0712 Medium parameters used: f = 829 MHz; σ = 0.997 S/m; ε_r = 54.29; ρ = 1000 kg/m^3
Ambient Temperature：23.9 ℃ ; Liquid Temperature：23.1 ℃

DASY5 Configuration:
- Probe: EX3DV4 - SN3753; ConvF(9.21, 9.21, 9.21); Calibrated: 2017/05/05;
- Sensor-Surface: 1.4mm (Mechanical Surface Detection)
- Electronics: DAE4 Sn916; Calibrated: 2016/12/15
- Phantom: Twin SAM Phantom_1485; Type: QD000P40;
- Measurement SW: DASY52, Version 52.8 (8); SEMCAD X Version 14.6.10 (7373)

- Area Scan (71x141x1): Interpolated grid: dx=1.500 mm, dy=1.500 mm
Maximum value of SAR (interpolated) = 0.732 W/kg

- Zoom Scan (5x5x7)/Cube 0: Measurement grid: dx=8mm, dy=8mm, dz=5mm
Reference Value = 26.97 V/m; Power Drift = 0.02 dB
Peak SAR (extrapolated) = 0.829 W/kg
SAR(1 g) = 0.491 W/kg; SAR(10 g) = 0.290 W/kg
Maximum value of SAR (measured) = 0.696 W/kg

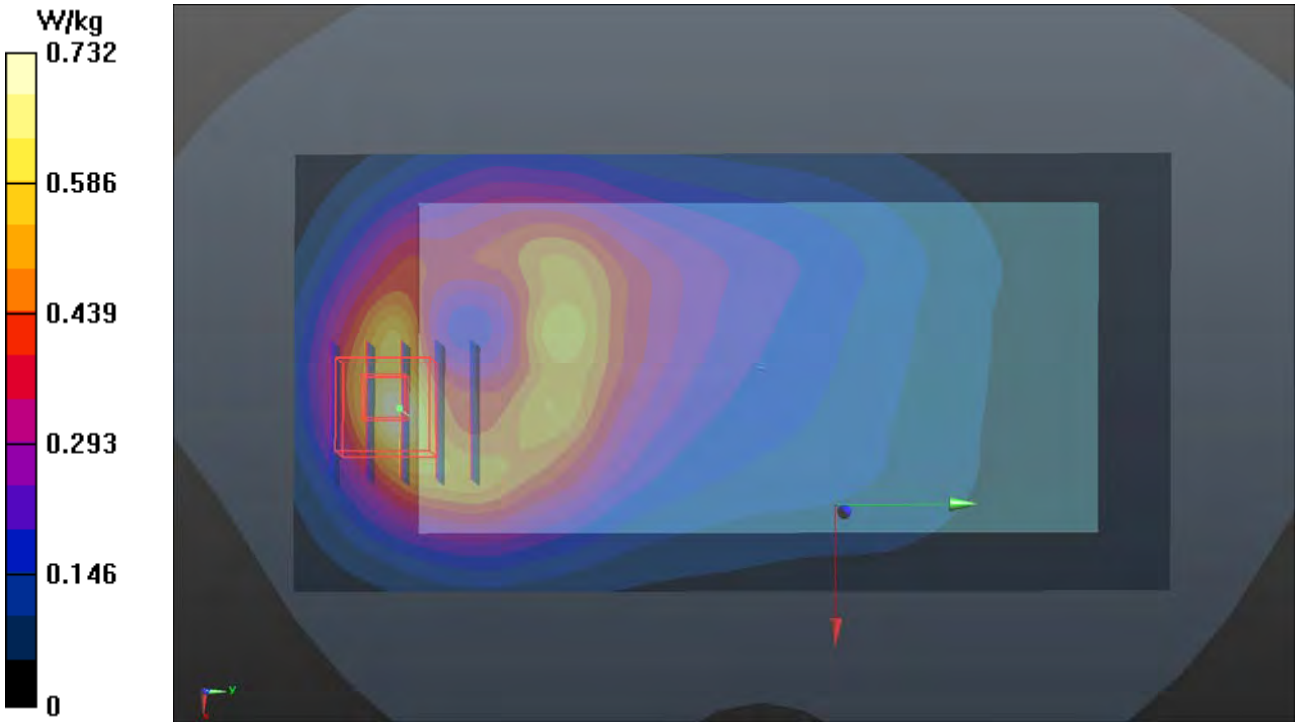

P24 LTE 7_QPSK20M_Rear Face_1cm_Ch21100_1RB_OS0

DUT: 170425C26

Communication System: LTE; Frequency: 2535 MHz;Duty Cycle: 1:1
Medium: B19T27N4_0714 Medium parameters used: f = 2535 MHz; σ = 2.093 S/m; ε_r = 51.327; ρ = 1000 kg/m^3
Ambient Temperature：23.7 ℃ ; Liquid Temperature：23.3 ℃

DASY5 Configuration:
- Probe: EX3DV4 - SN3753; ConvF(7.27, 7.27, 7.27); Calibrated: 2017/05/05;
- Sensor-Surface: 1.4mm (Mechanical Surface Detection)
- Electronics: DAE4 Sn916; Calibrated: 2016/12/15
- Phantom: Twin SAM Phantom_1127; Type: QD000P40CA;
- Measurement SW: DASY52, Version 52.8 (8); SEMCAD X Version 14.6.10 (7373)

- Area Scan (91x151x1): Interpolated grid: dx=1.200 mm, dy=1.200 mm
Maximum value of SAR (interpolated) = 1.10 W/kg

- Zoom Scan (5x5x7)/Cube 0: Measurement grid: dx=8mm, dy=8mm, dz=5mm
Reference Value = 20.95 V/m; Power Drift = 0.01 dB
Peak SAR (extrapolated) = 1.23 W/kg
SAR(1 g) = 0.629 W/kg; SAR(10 g) = 0.303 W/kg
Maximum value of SAR (measured) = 0.925 W/kg

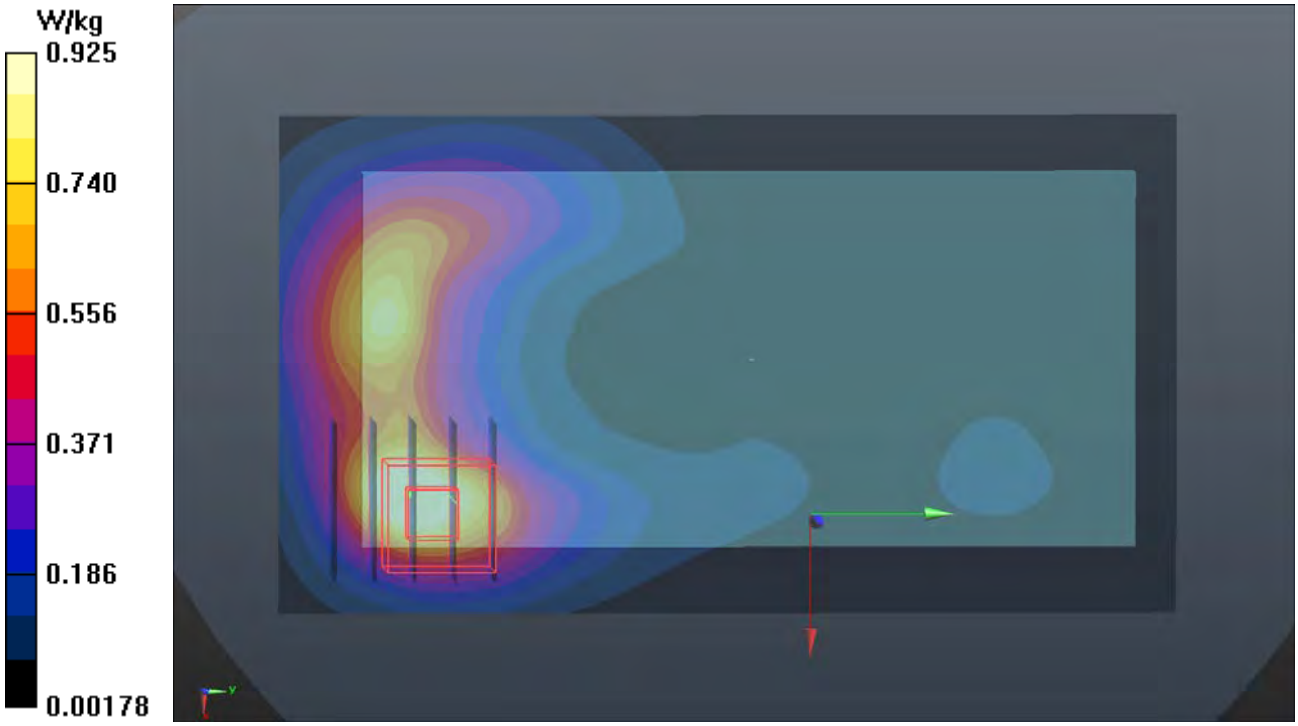

P25 LTE 12_QPSK10M_Front Face_1cm_Ch23095_1RB_OS0

DUT: 170425C26

Communication System: LTE; Frequency: 707.5 MHz;Duty Cycle: 1:1
Medium: B06T09N1_0712 Medium parameters used: f = 707.5 MHz; σ = 0.918 S/m; ε_r = 53.631; ρ = 1000 kg/m^3
Ambient Temperature：23.9 ℃ ; Liquid Temperature：23.3 ℃

DASY5 Configuration:
- Probe: EX3DV4 - SN3753; ConvF(9.43, 9.43, 9.43); Calibrated: 2017/05/05;
- Sensor-Surface: 1.4mm (Mechanical Surface Detection)
- Electronics: DAE4 Sn916; Calibrated: 2016/12/15
- Phantom: Twin SAM Phantom_1485; Type: QD000P40;
- Measurement SW: DASY52, Version 52.8 (8); SEMCAD X Version 14.6.10 (7373)

- Area Scan (71x141x1): Interpolated grid: dx=1.500 mm, dy=1.500 mm
Maximum value of SAR (interpolated) = 0.253 W/kg

- Zoom Scan (5x5x7)/Cube 0: Measurement grid: dx=8mm, dy=8mm, dz=5mm
Reference Value = 16.92 V/m; Power Drift = -0.06 dB
Peak SAR (extrapolated) = 0.347 W/kg
SAR(1 g) = 0.186 W/kg; SAR(10 g) = 0.108 W/kg
Maximum value of SAR (measured) = 0.281 W/kg

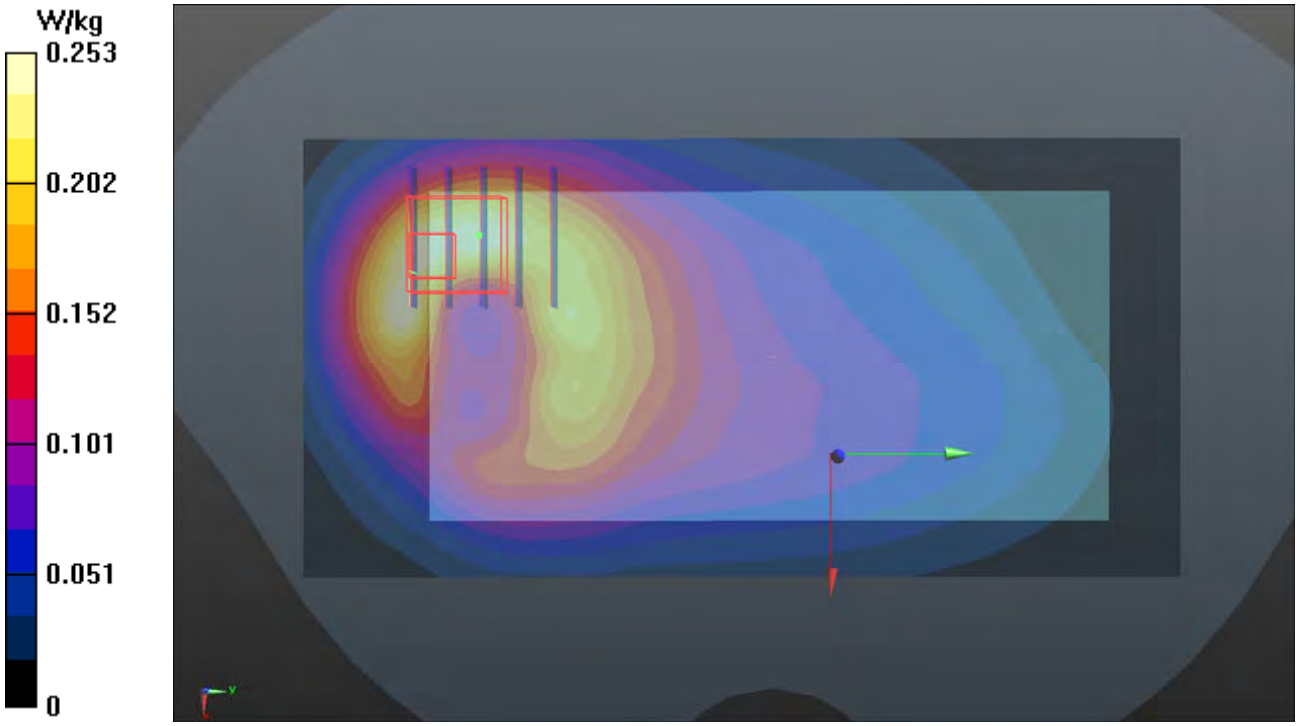

P26 LTE 17_QPSK10M_Front Face_1cm_Ch23790_1RB_OS0

DUT: 170425C26

Communication System: LTE; Frequency: 710 MHz;Duty Cycle: 1:1
Medium: B06T09N1_0712 Medium parameters used: f = 710 MHz; σ = 0.92 S/m; ε_r = 53.605; ρ = 1000 kg/m^3
Ambient Temperature：23.8 ℃ ; Liquid Temperature：23.2 ℃

DASY5 Configuration:
- Probe: EX3DV4 - SN3753; ConvF(9.43, 9.43, 9.43); Calibrated: 2017/05/05;
- Sensor-Surface: 1.4mm (Mechanical Surface Detection)
- Electronics: DAE4 Sn916; Calibrated: 2016/12/15
- Phantom: Twin SAM Phantom_1485; Type: QD000P40;
- Measurement SW: DASY52, Version 52.8 (8); SEMCAD X Version 14.6.10 (7373)

- Area Scan (71x141x1): Interpolated grid: dx=1.500 mm, dy=1.500 mm
Maximum value of SAR (interpolated) = 0.281 W/kg

- Zoom Scan (5x5x7)/Cube 0: Measurement grid: dx=8mm, dy=8mm, dz=5mm
Reference Value = 17.68 V/m; Power Drift = -0.08 dB
Peak SAR (extrapolated) = 0.375 W/kg
SAR(1 g) = 0.211 W/kg; SAR(10 g) = 0.126 W/kg
Maximum value of SAR (measured) = 0.298 W/kg

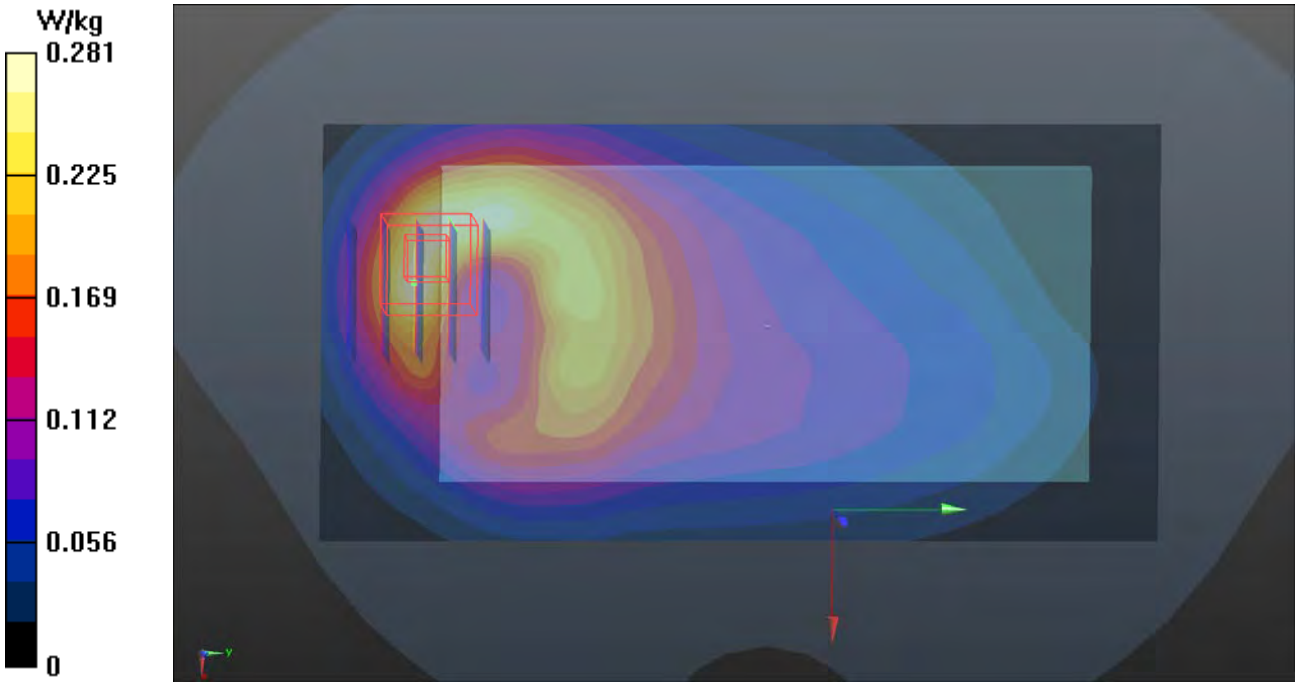

P27 2.4G WLAN_802.11b_Rear Face_1cm_Ch1

DUT: 170425C26

Communication System: WLAN_2.4G; Frequency: 2412 MHz;Duty Cycle: 1:1
Medium: B19T27N4_0714 Medium parameters used: f = 2412 MHz; σ = 1.954 S/m; ε_r = 51.658; ρ = 1000 kg/m^3
Ambient Temperature：23.8 ℃ ; Liquid Temperature：23.2 ℃

DASY5 Configuration:
- Probe: EX3DV4 - SN3753; ConvF(7.27, 7.27, 7.27); Calibrated: 2017/05/05;
- Sensor-Surface: 1.4mm (Mechanical Surface Detection)
- Electronics: DAE4 Sn916; Calibrated: 2016/12/15
- Phantom: Twin SAM Phantom_1127; Type: QD000P40CA;
- Measurement SW: DASY52, Version 52.8 (8); SEMCAD X Version 14.6.10 (7373)

- Area Scan (91x151x1): Interpolated grid: dx=1.200 mm, dy=1.200 mm
Maximum value of SAR (interpolated) = 0.506 W/kg

- Zoom Scan (5x5x7)/Cube 0: Measurement grid: dx=8mm, dy=8mm, dz=5mm
Reference Value = 14.02 V/m; Power Drift = 0.01 dB
Peak SAR (extrapolated) = 0.637 W/kg
SAR(1 g) = 0.359 W/kg; SAR(10 g) = 0.189 W/kg
Maximum value of SAR (measured) = 0.538 W/kg

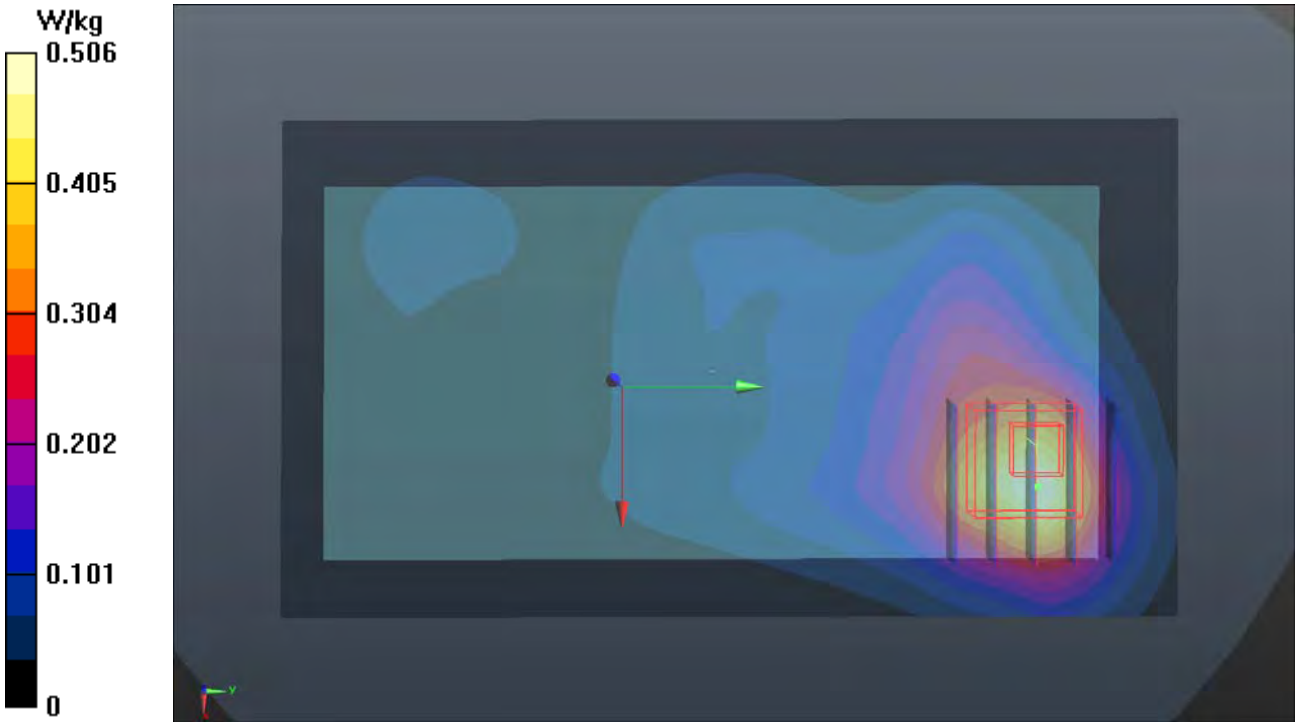

P29 5.3G WLAN_802.11n HT40_Front Face_1cm_Ch62

DUT: 170425C26

Communication System: WLAN_5G; Frequency: 5310 MHz;Duty Cycle: 1:1
Medium: B34T60N1_0714 Medium parameters used: f = 5310 MHz; σ = 5.481 S/m; ε_r = 47.173; ρ = 1000 kg/m^3
Ambient Temperature：23.9 ℃ ; Liquid Temperature：23.3 ℃

DASY5 Configuration:
- Probe: EX3DV4 - SN3971; ConvF(4.7, 4.7, 4.7); Calibrated: 2017/03/24;
- Sensor-Surface: 1.4mm (Mechanical Surface Detection)
- Electronics: DAE3 Sn579; Calibrated: 2016/09/05
- Phantom: Twin SAM Phantom_1485; Type: QD000P40;
- Measurement SW: DASY52, Version 52.8 (8); SEMCAD X Version 14.6.10 (7373)

- Area Scan (101x181x1): Interpolated grid: dx=1.000 mm, dy=1.000 mm
Maximum value of SAR (interpolated) = 0.933 W/kg

- Zoom Scan (6x6x12)/Cube 0: Measurement grid: dx=5mm, dy=5mm, dz=2mm
Reference Value = 14.14 V/m; Power Drift = 0.00 dB
Peak SAR (extrapolated) = 1.80 W/kg
SAR(1 g) = 0.438 W/kg; SAR(10 g) = 0.140 W/kg
Maximum value of SAR (measured) = 1.03 W/kg

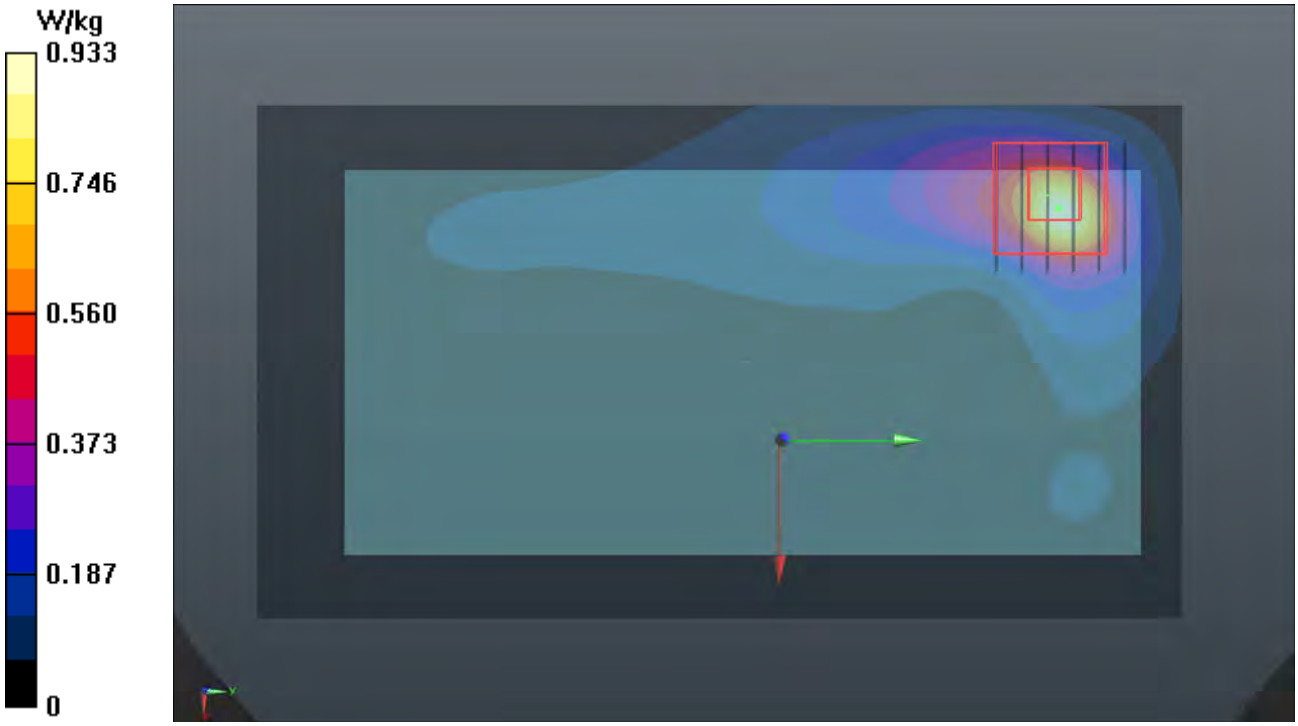

P30 5.6G WLAN_802.11n HT40_Front Face_1cm_Ch102

DUT: 170425C26

Communication System: WLAN_5G; Frequency: 5510 MHz;Duty Cycle: 1:1
Medium: B34T60N1_0714 Medium parameters used: f = 5510 MHz; σ = 5.715 S/m; ε_r = 46.777; ρ = 1000 kg/m^3
Ambient Temperature：23.9 ℃ ; Liquid Temperature：23.3 ℃

DASY5 Configuration:
- Probe: EX3DV4 - SN3971; ConvF(4.32, 4.32, 4.32); Calibrated: 2017/03/24;
- Sensor-Surface: 1.4mm (Mechanical Surface Detection)
- Electronics: DAE3 Sn579; Calibrated: 2016/09/05
- Phantom: Twin SAM Phantom_1485; Type: QD000P40;
- Measurement SW: DASY52, Version 52.8 (8); SEMCAD X Version 14.6.10 (7373)

- Area Scan (101x181x1): Interpolated grid: dx=1.000 mm, dy=1.000 mm
Maximum value of SAR (interpolated) = 1.36 W/kg

- Zoom Scan (6x6x12)/Cube 0: Measurement grid: dx=5mm, dy=5mm, dz=2mm
Reference Value = 17.25 V/m; Power Drift = 0.01 dB
Peak SAR (extrapolated) = 2.37 W/kg
SAR(1 g) = 0.574 W/kg; SAR(10 g) = 0.191 W/kg
Maximum value of SAR (measured) = 1.35 W/kg

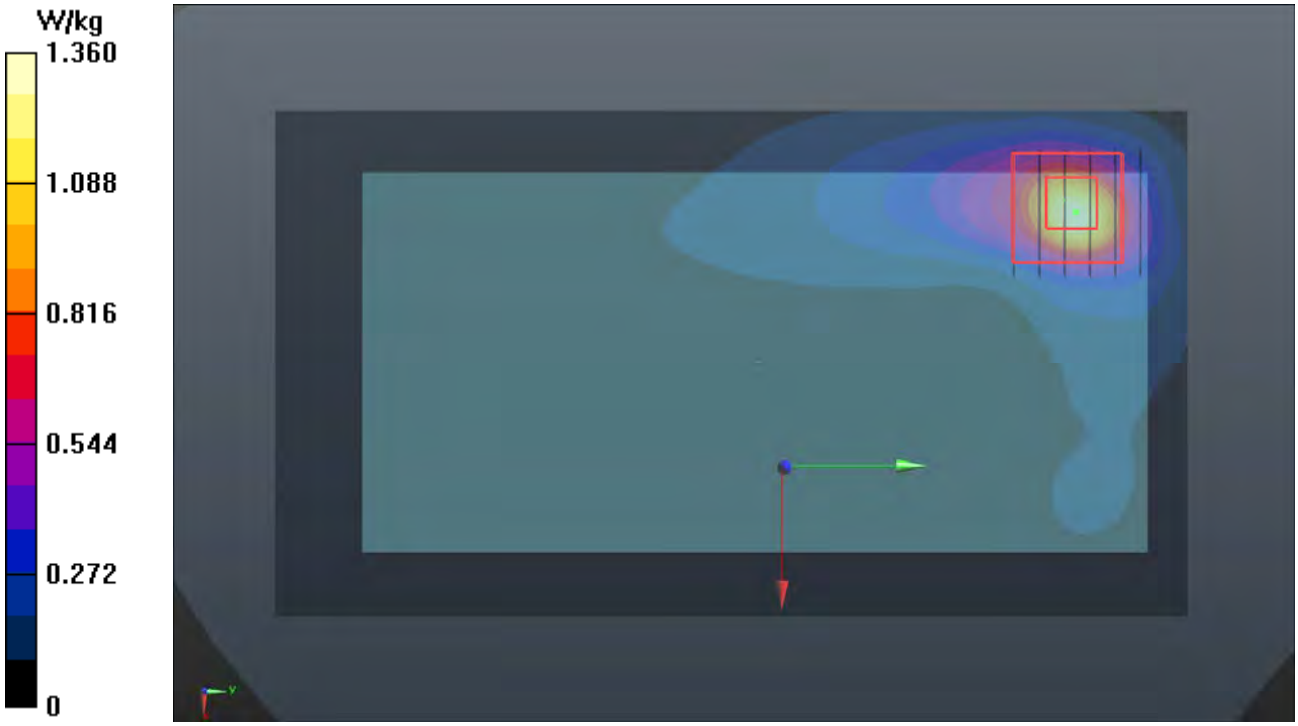

P31 5.8G WLAN_802.11n HT40_Front Face_1cm_Ch159

DUT: 170425C26

Communication System: WLAN_5G; Frequency: 5795 MHz;Duty Cycle: 1:1
Medium: B34T60N1_0714 Medium parameters used: f = 5795 MHz; σ = 6.106 S/m; ε_r = 46.403; ρ = 1000 kg/m^3
Ambient Temperature：23.9 ℃ ; Liquid Temperature：23.3 ℃

DASY5 Configuration:
- Probe: EX3DV4 - SN3971; ConvF(4.22, 4.22, 4.22); Calibrated: 2017/03/24;
- Sensor-Surface: 1.4mm (Mechanical Surface Detection)
- Electronics: DAE3 Sn579; Calibrated: 2016/09/05
- Phantom: Twin SAM Phantom_1485; Type: QD000P40;
- Measurement SW: DASY52, Version 52.8 (8); SEMCAD X Version 14.6.10 (7373)

- Area Scan (101x181x1): Interpolated grid: dx=1.000 mm, dy=1.000 mm
Maximum value of SAR (interpolated) = 0.775 W/kg

- Zoom Scan (6x6x12)/Cube 0: Measurement grid: dx=5mm, dy=5mm, dz=2mm
Reference Value = 12.86 V/m; Power Drift = -0.07 dB
Peak SAR (extrapolated) = 1.51 W/kg
SAR(1 g) = 0.343 W/kg; SAR(10 g) = 0.110 W/kg
Maximum value of SAR (measured) = 0.834 W/kg

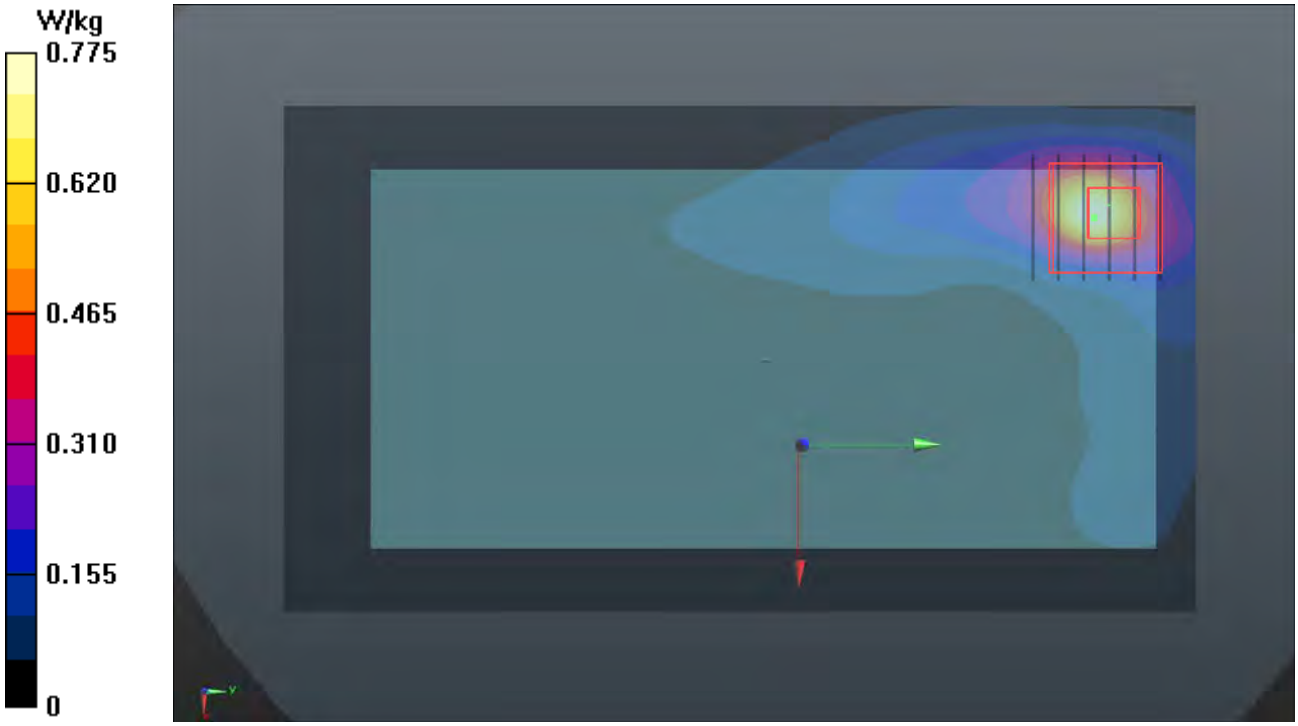

P32 Bluetooth_DH1_Rear Face_1cm_Ch0

DUT: 170425C26

Communication System: BT; Frequency: 2402 MHz;Duty Cycle: 1:1
Medium: B19T27N2_0719 Medium parameters used: f = 2402 MHz; σ = 1.948 S/m; ε_r = 50.69; ρ = 1000 kg/m^3
Ambient Temperature：23.8 ℃ ; Liquid Temperature：23.3 ℃

DASY5 Configuration:
- Probe: EX3DV4 - SN3753; ConvF(7.27, 7.27, 7.27); Calibrated: 2017/05/05;
- Sensor-Surface: 1.4mm (Mechanical Surface Detection)
- Electronics: DAE4 Sn916; Calibrated: 2016/12/15
- Phantom: Twin SAM Phantom_1496; Type: QD000P40CA;
- Measurement SW: DASY52, Version 52.8 (8); SEMCAD X Version 14.6.10 (7373)

- Area Scan (91x151x1): Interpolated grid: dx=1.200 mm, dy=1.200 mm
Maximum value of SAR (interpolated) = 0.0356 W/kg

- Zoom Scan (5x5x7)/Cube 0: Measurement grid: dx=8mm, dy=8mm, dz=5mm
Reference Value = 3.987 V/m; Power Drift = -0.02 dB
Peak SAR (extrapolated) = 0.0470 W/kg
SAR(1 g) = 0.029 W/kg; SAR(10 g) = 0.016 W/kg
Maximum value of SAR (measured) = 0.0393 W/kg

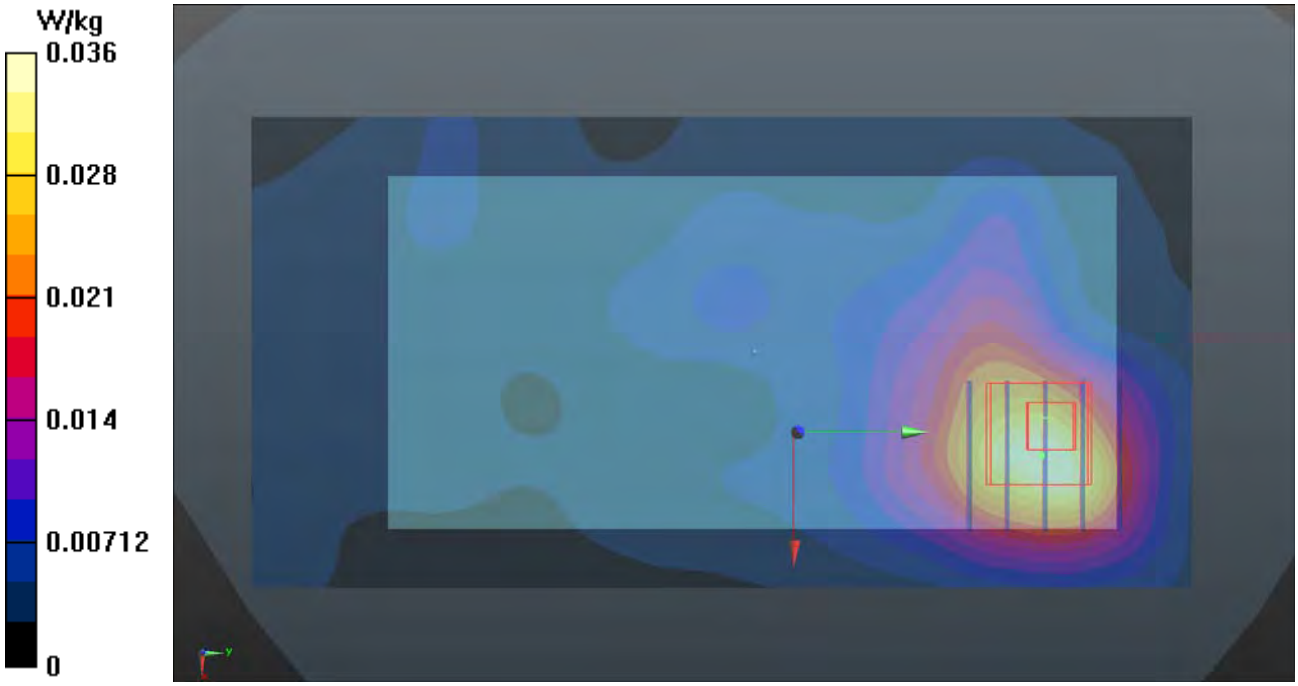

P33 GSM1900_GPRS10_Bottom Side_1cm_Ch661

DUT: 170425C26

Communication System: GPRS10; Frequency: 1880 MHz;Duty Cycle: 1:4
Medium: B16T20N2_0711 Medium parameters used: f = 1880 MHz; σ = 1.553 S/m; ε_r = 50.823; ρ = 1000 kg/m^3
Ambient Temperature：23.9 ℃ ; Liquid Temperature：23.6 ℃

DASY5 Configuration:
- Probe: EX3DV4 - SN3971; ConvF(8.26, 8.26, 8.26); Calibrated: 2017/03/24;
- Sensor-Surface: 1.4mm (Mechanical Surface Detection)
- Electronics: DAE3 Sn579; Calibrated: 2016/09/05
- Phantom: Twin SAM Phantom_1823; Type: QD000P40CD;
- Measurement SW: DASY52, Version 52.8 (8); SEMCAD X Version 14.6.10 (7373)

- Area Scan (61x71x1): Interpolated grid: dx=1.500 mm, dy=1.500 mm
Maximum value of SAR (interpolated) = 0.773 W/kg

- Zoom Scan (5x5x7)/Cube 0: Measurement grid: dx=8mm, dy=8mm, dz=5mm
Reference Value = 21.70 V/m; Power Drift = 0.11 dB
Peak SAR (extrapolated) = 1.04 W/kg
SAR(1 g) = 0.544 W/kg; SAR(10 g) = 0.272 W/kg
Maximum value of SAR (measured) = 0.836 W/kg

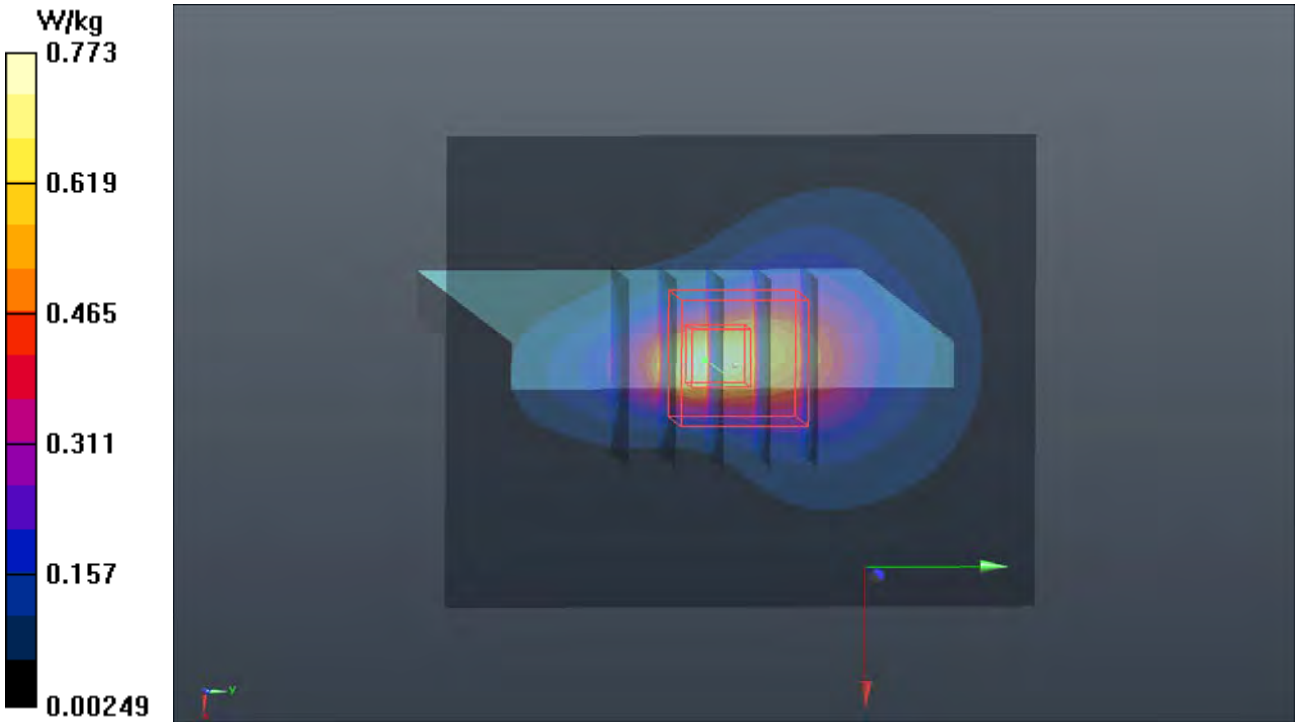

P34 WCDMA II_RMC12.2K_Bottom Side_1cm_Ch9400

DUT: 170425C26

Communication System: WCDMA; Frequency: 1880 MHz;Duty Cycle: 1:1
Medium: B16T20N2_0711 Medium parameters used: f = 1880 MHz; σ = 1.553 S/m; ε_r = 50.823; ρ = 1000 kg/m^3
Ambient Temperature：23.9 ℃ ; Liquid Temperature：23.6 ℃

DASY5 Configuration:
- Probe: EX3DV4 - SN3971; ConvF(8.26, 8.26, 8.26); Calibrated: 2017/03/24;
- Sensor-Surface: 1.4mm (Mechanical Surface Detection)
- Electronics: DAE3 Sn579; Calibrated: 2016/09/05
- Phantom: Twin SAM Phantom_1823; Type: QD000P40CD;
- Measurement SW: DASY52, Version 52.8 (8); SEMCAD X Version 14.6.10 (7373)

- Area Scan (61x71x1): Interpolated grid: dx=1.500 mm, dy=1.500 mm
Maximum value of SAR (interpolated) = 1.14 W/kg

- Zoom Scan (5x5x7)/Cube 0: Measurement grid: dx=8mm, dy=8mm, dz=5mm
Reference Value = 27.31 V/m; Power Drift = -0.11 dB
Peak SAR (extrapolated) = 1.38 W/kg
SAR(1 g) = 0.721 W/kg; SAR(10 g) = 0.360 W/kg
Maximum value of SAR (measured) = 1.12 W/kg

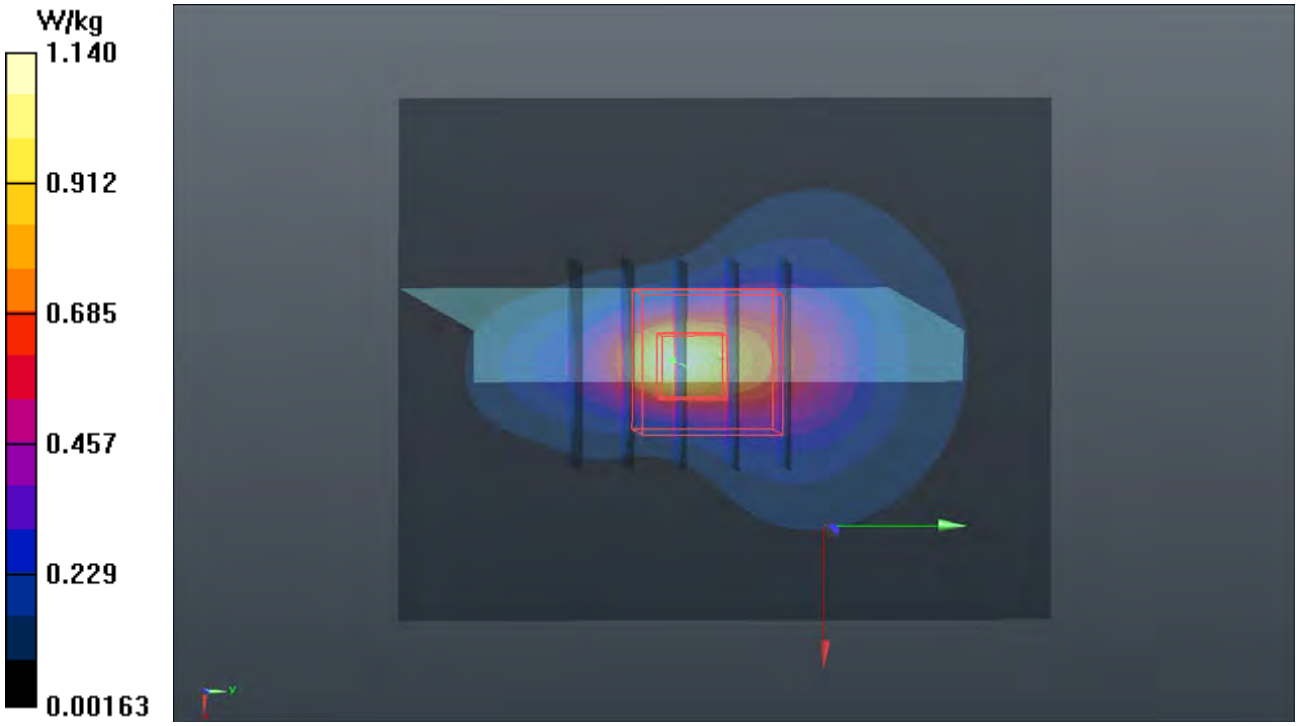

P35 WCDMA IV_RMC12.2K_Bottom Side_1cm_Ch1312

DUT: 170425C26

Communication System: WCDMA; Frequency: 1712.4 MHz;Duty Cycle: 1:1
Medium: B16T20N2_0712 Medium parameters used: f = 1712.4 MHz; σ = 1.398 S/m; ε_r = 51.451; ρ = 1000 kg/m^3
Ambient Temperature：23.7 ℃ ; Liquid Temperature：23.3 ℃

DASY5 Configuration:
- Probe: EX3DV4 - SN3753; ConvF(7.87, 7.87, 7.87); Calibrated: 2017/05/05;
- Sensor-Surface: 1.4mm (Mechanical Surface Detection)
- Electronics: DAE4 Sn916; Calibrated: 2016/12/15
- Phantom: Twin SAM Phantom_1485; Type: QD000P40;
- Measurement SW: DASY52, Version 52.8 (8); SEMCAD X Version 14.6.10 (7373)

- Area Scan (61x71x1): Interpolated grid: dx=1.500 mm, dy=1.500 mm
Maximum value of SAR (interpolated) = 0.746 W/kg

- Zoom Scan (5x5x7)/Cube 0: Measurement grid: dx=8mm, dy=8mm, dz=5mm
Reference Value = 23.03 V/m; Power Drift = 0.18 dB
Peak SAR (extrapolated) = 0.925 W/kg
SAR(1 g) = 0.506 W/kg; SAR(10 g) = 0.258 W/kg
Maximum value of SAR (measured) = 0.752 W/kg

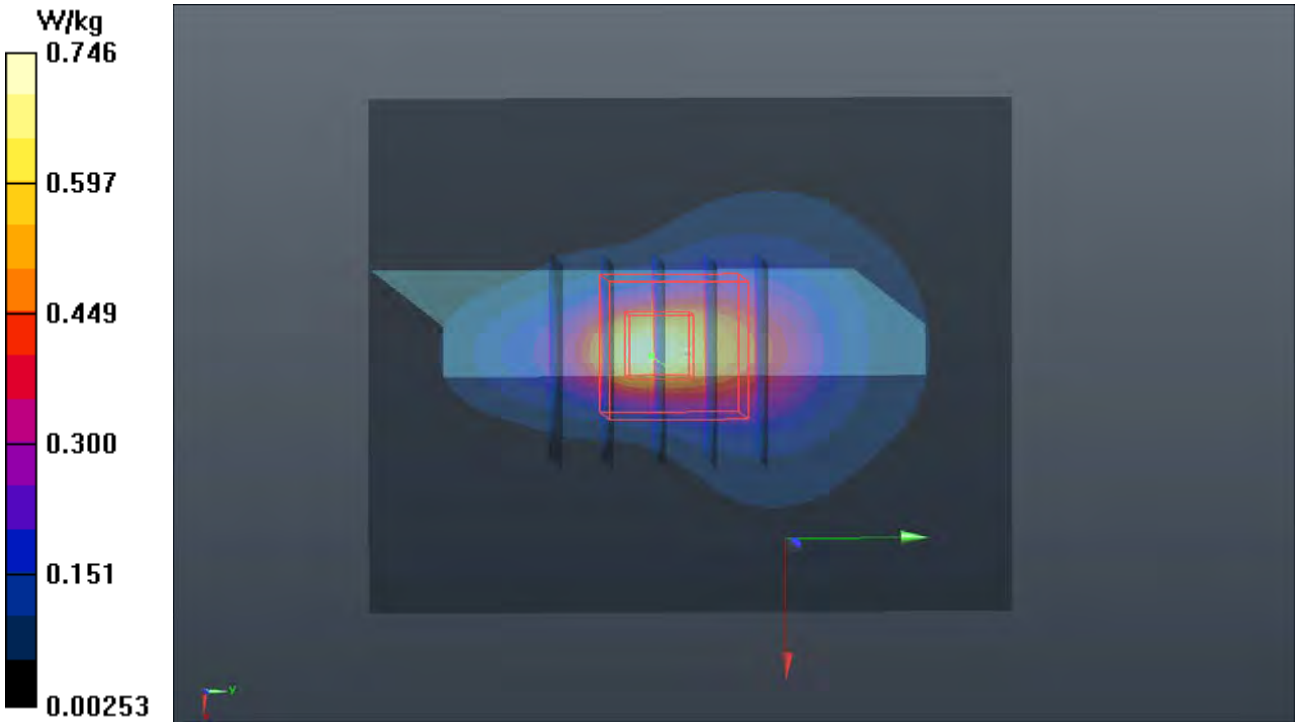

P36 LTE 2_QPSK20M_Bottom Side_1cm_Ch19100_1RB_OS0

DUT: 170425C26

Communication System: LTE; Frequency: 1900 MHz;Duty Cycle: 1:1
Medium: B16T20N2_0711 Medium parameters used: f = 1900 MHz; σ = 1.566 S/m; ε_r = 50.88; ρ = 1000 kg/m^3
Ambient Temperature：23.9 ℃ ; Liquid Temperature：23.6 ℃

DASY5 Configuration:
- Probe: EX3DV4 - SN3971; ConvF(8.26, 8.26, 8.26); Calibrated: 2017/03/24;
- Sensor-Surface: 1.4mm (Mechanical Surface Detection)
- Electronics: DAE3 Sn579; Calibrated: 2016/09/05
- Phantom: Twin SAM Phantom_1823; Type: QD000P40CD;
- Measurement SW: DASY52, Version 52.8 (8); SEMCAD X Version 14.6.10 (7373)

- Area Scan (61x71x1): Interpolated grid: dx=1.500 mm, dy=1.500 mm
Maximum value of SAR (interpolated) = 1.33 W/kg

- Zoom Scan (5x5x7)/Cube 0: Measurement grid: dx=8mm, dy=8mm, dz=5mm
Reference Value = 29.35 V/m; Power Drift = 0.06 dB
Peak SAR (extrapolated) = 1.65 W/kg
SAR(1 g) = 0.873 W/kg; SAR(10 g) = 0.439 W/kg
Maximum value of SAR (measured) = 1.34 W/kg

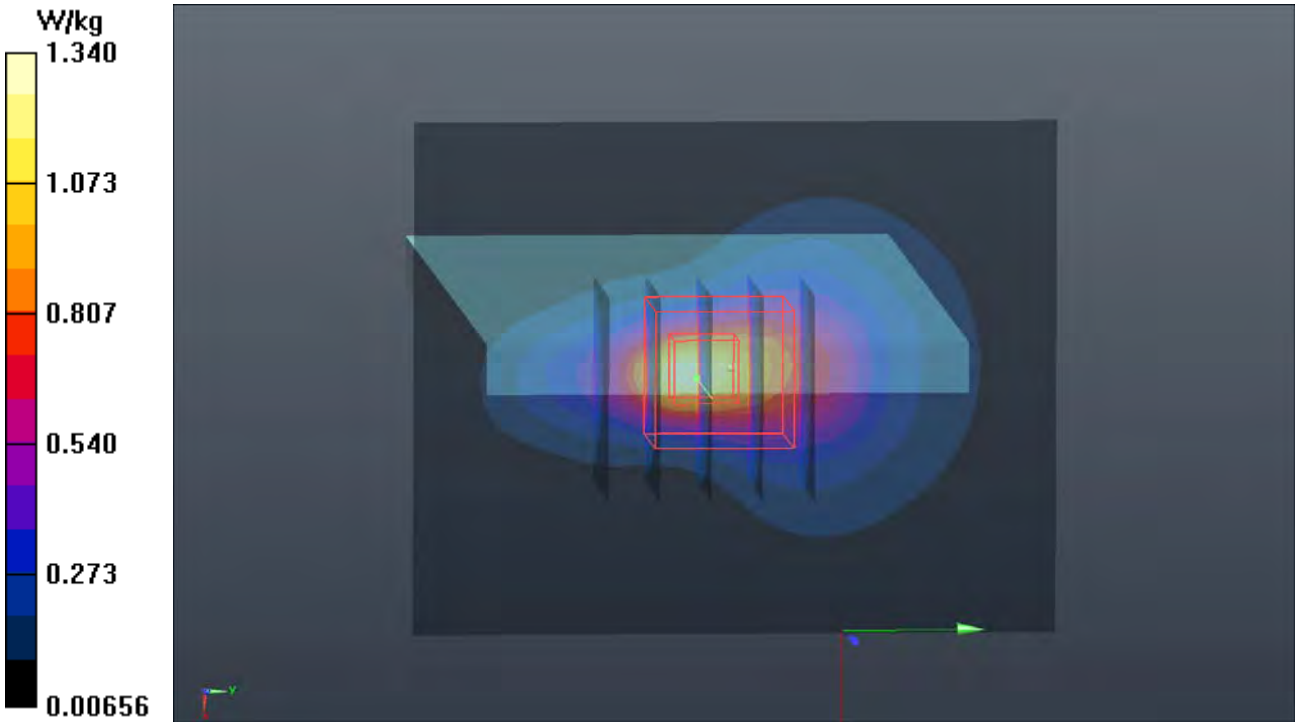

P37 LTE 4_QPSK20M_Bottom Side_1cm_Ch20175_1RB_OS0

DUT: 170425C26

Communication System: LTE; Frequency: 1732.5 MHz;Duty Cycle: 1:1
Medium: B16T20N2_0711 Medium parameters used: f = 1732.5 MHz; σ = 1.426 S/m; ε_r = 51.041; ρ = 1000 kg/m^3
Ambient Temperature：23.9 ℃ ; Liquid Temperature：23.6 ℃

DASY5 Configuration:
- Probe: EX3DV4 - SN3971; ConvF(8.51, 8.51, 8.51); Calibrated: 2017/03/24;
- Sensor-Surface: 1.4mm (Mechanical Surface Detection)
- Electronics: DAE3 Sn579; Calibrated: 2016/09/05
- Phantom: Twin SAM Phantom_1823; Type: QD000P40CD;
- Measurement SW: DASY52, Version 52.8 (8); SEMCAD X Version 14.6.10 (7373)

- Area Scan (61x71x1): Interpolated grid: dx=1.500 mm, dy=1.500 mm
Maximum value of SAR (interpolated) = 1.04 W/kg

- Zoom Scan (5x5x7)/Cube 0: Measurement grid: dx=8mm, dy=8mm, dz=5mm
Reference Value = 27.75 V/m; Power Drift = 0.06 dB
Peak SAR (extrapolated) = 1.21 W/kg
SAR(1 g) = 0.663 W/kg; SAR(10 g) = 0.339 W/kg
Maximum value of SAR (measured) = 1.02 W/kg

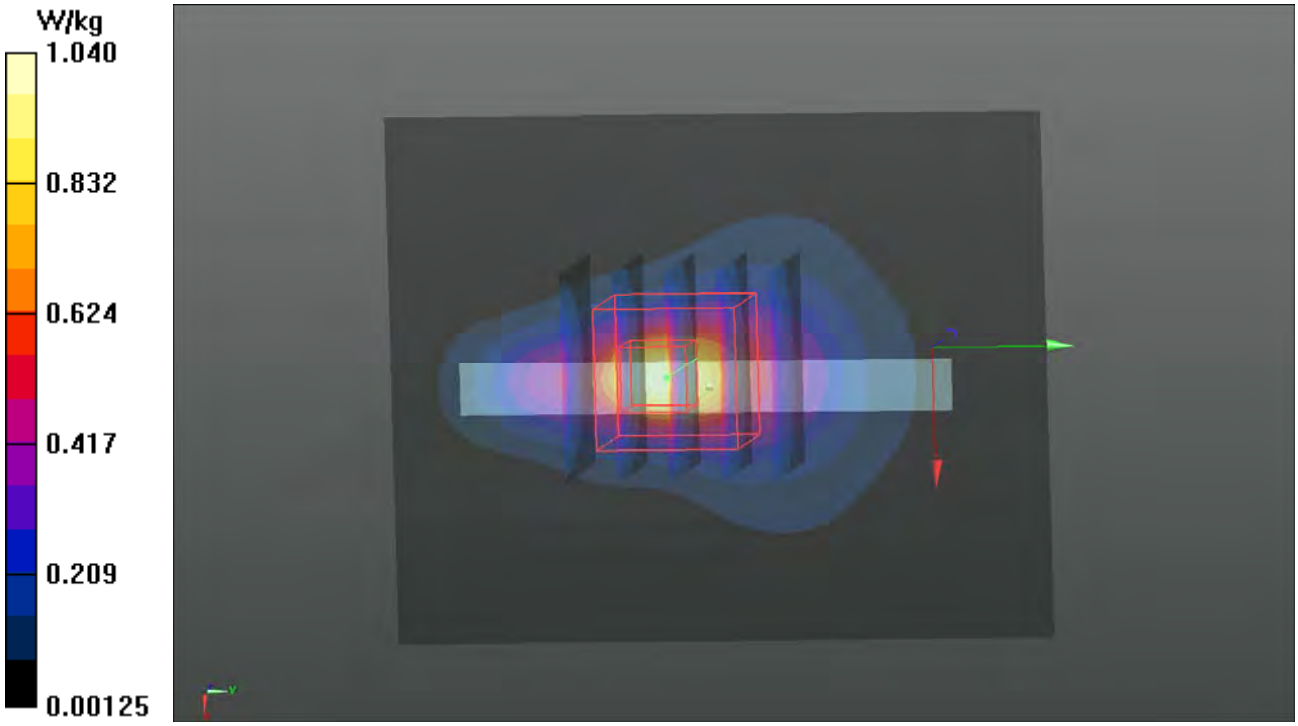

P38 LTE 7_QPSK20M_Bottom Side_1cm_Ch20850_1RB_OS0

DUT: 170425C26

Communication System: LTE; Frequency: 2510 MHz;Duty Cycle: 1:1
Medium: B19T27N4_0711 Medium parameters used: f = 2510 MHz; σ = 2.089 S/m; ε_r = 50.393; ρ = 1000 kg/m^3
Ambient Temperature：23.7 ℃ ; Liquid Temperature：23.3 ℃

DASY5 Configuration:
- Probe: EX3DV4 - SN3971; ConvF(7.32, 7.32, 7.32); Calibrated: 2017/03/24;
- Sensor-Surface: 1.4mm (Mechanical Surface Detection)
- Electronics: DAE3 Sn579; Calibrated: 2016/09/05
- Phantom: Twin SAM Phantom_1823; Type: QD000P40CD;
- Measurement SW: DASY52, Version 52.8 (8); SEMCAD X Version 14.6.10 (7373)

- Area Scan (71x81x1): Interpolated grid: dx=1.200 mm, dy=1.200 mm
Maximum value of SAR (interpolated) = 1.86 W/kg
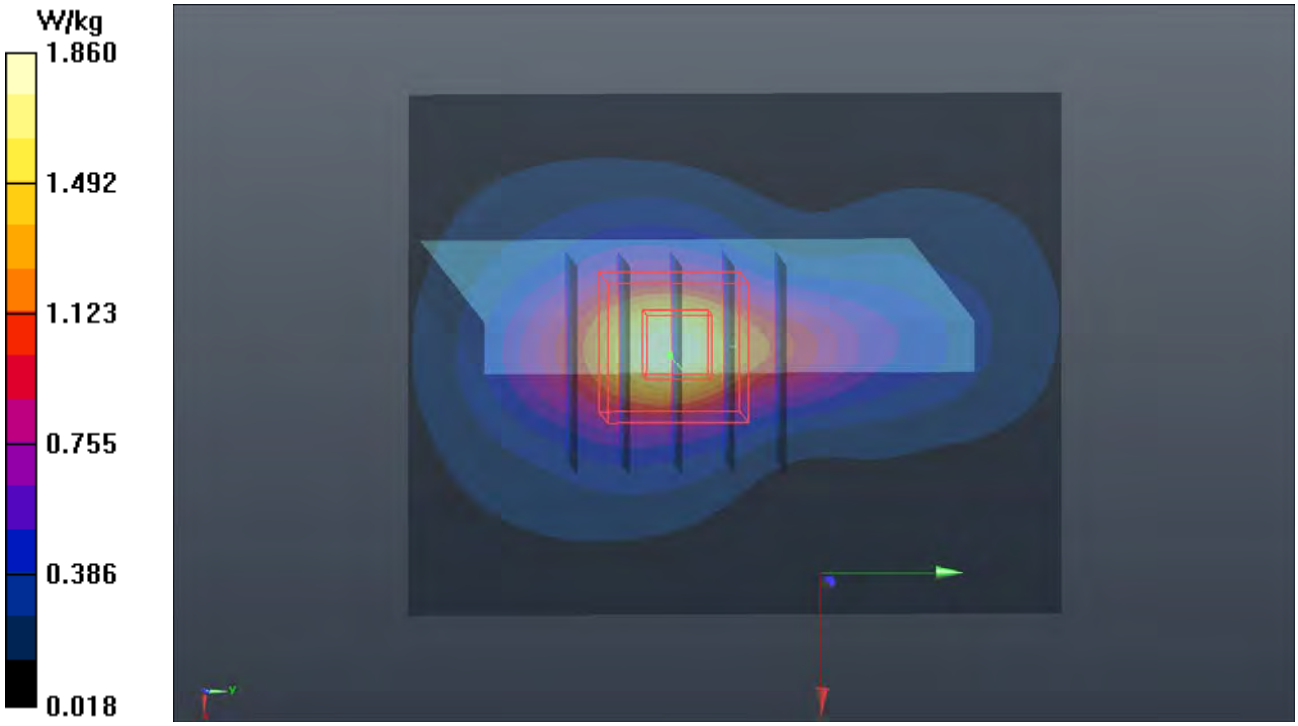
- Zoom Scan (5x5x7)/Cube 0: Measurement grid: dx=8mm, dy=8mm, dz=5mm
Reference Value = 30.52 V/m; Power Drift = 0.02 dB
Peak SAR (extrapolated) = 2.37 W/kg
SAR(1 g) = 1.17 W/kg; SAR(10 g) = 0.592 W/kg
Maximum value of SAR (measured) = 1.87 W/kg