FCC SAR Test Report

Report No.	:	**SA170726C31**
Applicant	:	**ASUSTek COMPUTER INC.**
Address	:	**4F, No. 150, LI-TE Rd., PEITOU, TAIPEI 112, TAIWAN**
Product	:	**ASUS Phone**
FCC ID	:	**MSQZ01KDA**
Brand	:	**ASUS**
Model No.	:	**ASUS_Z01KDA ,ASUS_Z01KS**
Standards	:	**FCC 47 CFR Part 2 (2.1093), IEEE C95.1:1992, IEEE Std 1528:2013** **KDB 865664 D01 v01r04, KDB 865664 D02 v01r02** **KDB 248227 D01 v02r02, KDB 447498 D01 v06, KDB 648474 D04 v01r03** **KDB 941225 D01 v03r01, KDB 941225 D05 v02r05, KDB 941225 D06 v02r01**
Sample Received Date	:	**Jul. 14, 2017**
Date of Testing	:	**Jul. 14, 2017 ~ Sep. 13, 2017**
Lab Address	:	**No. 47-2, 14th Ling, Chia Pau Vil., Lin Kou Dist., New Taipei City, Taiwan, R.O.C.**
Test Location	:	**No. 19, Hwa Ya 2nd Rd, Wen Hwa Vil, Kwei Shan Dist., Taoyuan City 33383, Taiwan (R.O.C)**

CERTIFICATION: The above equipment have been tested by **Bureau Veritas Consumer Products Services (H.K.) Ltd., Taoyuan Branch – Lin Kou Laboratories**, and found compliance with the requirement of the above standards. The test record, data evaluation & Equipment Under Test (EUT) configurations represented herein are true and accurate accounts of the measurements of the sample's SAR characteristics under the conditions specified in this report. It should not be reproduced except in full, without the written approval of our laboratory. The client should not use it to claim product certification, approval, or endorsement by TAF or any government agencies.

Prepared By :

Ivonne Wu / Supervisor

Approved By :

Gordon Lin / Assistant Manager

FCC Accredited No.: TW0003

This report is for your exclusive use. Any copying or replication of this report to or for any other person or entity, or use of our name or trademark, is permitted only with our prior written permission. This report sets forth our findings solely with respect to the test samples identified herein. The results set forth in this report are not indicative or representative of the quality or characteristics of the lot from which a test sample was taken or any similar or identical product unless specifically and expressly noted. Our report includes all of the tests requested by you and the results thereof based upon the information that you provided to us. You have 60 days from date of issuance of this report to notify us of any material error or omission caused by our negligence, provided, however, that such notice shall be in writing and shall specifically address the issue you wish to raise. A failure to raise such issue within the prescribed time shall constitute your unqualified acceptance of the completeness of this report, the tests conducted and the correctness of the report contents. Unless specific mention, the uncertainty of measurement has been explicitly taken into account to declare the compliance or non-compliance to the specification.

Table of Contents

Release Control Record **3**
1. Summary of Maximum SAR Value **4**
2. Description of Equipment Under Test **5**
3. SAR Measurement System **6**
3.1 Definition of Specific Absorption Rate (SAR) 6
3.2 SPEAG DASY52 System 6
3.2.1 Robot 7
3.2.2 Probes 8
3.2.3 Data Acquisition Electronics (DAE) 8
3.2.4 Phantoms 9
3.2.5 Device Holder 10
3.2.6 System Validation Dipoles 10
3.2.7 Tissue Simulating Liquids 11
3.3 SAR System Verification 14
3.4 SAR Measurement Procedure 15
3.4.1 Area & Zoom Scan Procedure 15
3.4.2 Volume Scan Procedure 15
3.4.3 Power Drift Monitoring 16
3.4.4 Spatial Peak SAR Evaluation 16
3.4.5 SAR Averaged Methods 16
4. SAR Measurement Evaluation **17**
4.1 EUT Configuration and Setting 17
4.2 EUT Testing Position 25
4.2.1 Head Exposure Conditions 25
4.2.2 Body-worn Accessory Exposure Conditions 27
4.2.3 Hotspot Mode Exposure Conditions 28
4.3 Tissue Verification 29
4.4 System Validation 30
4.5 System Verification 31
4.6 Maximum Output Power 32
4.6.1 Power Reduction information 32
4.6.2 Maximum Target Conducted Power 33
4.6.3 Measured Conducted Power Result 38
4.7 SAR Testing Results 55
4.7.1 SAR Test Reduction Considerations 55
4.7.2 SAR Results for Head Exposure Condition 60
4.7.3 SAR Results for Body-worn Exposure Condition (Test Separation Distance is 15 mm) 64
4.7.4 SAR Results for Hotspot Exposure Condition (Test Separation Distance is 10 mm) 66
4.7.5 SAR Measurement Variability 70
4.7.6 Simultaneous Multi-band Transmission Evaluation 71
5. Calibration of Test Equipment **81**
6. Measurement Uncertainty **82**
7. Information on the Testing Laboratories **86**

Appendix A. SAR Plots of System Verification
Appendix B. SAR Plots of SAR Measurement
Appendix C. Calibration Certificate for Probe and Dipole
Appendix D. Photographs of EUT and Setup

Release Control Record

Report No.	Reason for Change	Date Issued
SA170726C31	Initial release	Oct. 16, 2017

1. Summary of Maximum SAR Value

Equipment Class	Mode	Highest SAR-1g Head (W/kg)	Highest SAR-1g Body-worn Tested at 15 mm (W/kg)	Highest SAR-1g Hotspot Tested at 10 mm (W/kg)
PCE	GSM850	1.13	0.73	0.85
	GSM1900	0.97	0.40	1.04
	WCDMA II	1.09	0.48	1.13
	WCDMA V	1.01	0.39	0.91
	LTE 2	0.90	0.47	1.04
	LTE 5	1.06	0.45	0.75
	LTE 7	0.12	0.40	1.18
	LTE 26	1.07	0.41	0.79
	LTE 41	0.05	0.23	0.75
DTS	2.4G WLAN	0.33	0.20	0.38
NII	5.2G WLAN	N/A	N/A	0.33
	5.3G WLAN	0.46	0.24	N/A
	5.6G WLAN	0.46	0.42	N/A
	5.8G WLAN	0.40	0.17	0.36
DSS	Bluetooth	N/A	0.03	N/A
DXX	NFC	N/A	N/A	N/A
Highest Simultaneous Transmission SAR		Head	Body-worn	Hotspot
		1.59	1.15	1.27

Note:

1. The SAR criteria **(Head & Body: SAR-1g 1.6 W/kg, and Extremity: SAR-10g 4.0 W/kg)** for general population / uncontrolled exposure is specified in FCC 47 CFR part 2 (2.1093) and ANSI/IEEE C95.1-1992.

2. Description of Equipment Under Test

EUT Type	ASUS Phone
FCC ID	MSQZ01KDA
Brand Name	ASUS
Model Name	ASUS_Z01KDA ,ASUS_Z01KS
SKU	Operator-3CA
Tx Frequency Bands (Unit: MHz)	GSM850 : 824.2 ~ 848.8 GSM1900 : 1850.2 ~ 1909.8 WCDMA Band II : 1852.4 ~ 1907.6 WCDMA Band V : 826.4 ~ 846.6 LTE Band 2 : 1850.7 ~ 1909.3 (BW: 1.4M, 3M, 5M, 10M, 15M, 20M) LTE Band 5 : 824.7 ~ 848.3 (BW: 1.4M, 3M, 5M, 10M) LTE Band 7 : 2502.5 ~ 2567.5 (BW: 5M, 10M, 15M, 20M) LTE Band 26 : 814.7 ~ 848.3 (BW: 1.4M, 3M, 5M, 10M, 15M) LTE Band 41 : 2498.5 ~ 2687.5 (BW: 5M, 10M, 15M, 20M) WLAN : 2412 ~ 2472, 5180 ~ 5240, 5260 ~ 5320, 5500 ~ 5700, 5745 ~ 5825 Bluetooth : 2402 ~ 2480 NFC : 13.56
Uplink Modulations	GSM & GPRS : GMSK EDGE : 8PSK WCDMA : QPSK CDMA : QPSK LTE : QPSK, 16QAM, 64QAM 802.11b : DSSS 802.11a/g/n/ac : OFDM Bluetooth : GFSK, π/4-DQPSK, 8-DPSK ANT+ : GFSK NFC : ASK
Maximum Tune-up Conducted Power (Unit: dBm)	Please refer to section 4.6.2 of this report
Antenna Type	WWAN: Fixed Internal Antenna WLAN/BT: PIFA Antenna
EUT Stage	Production Unit

Note:

1. The models are listed as below.

Brand	Model	Difference
ASUS	ASUS_Z01KDA	Dual SIM
	ASUS_Z01KS	Single SIM

2. The above EUT information is declared by manufacturer and for more detailed features description please refers to the manufacturer's specifications or User's Manual.

3. SAR Measurement System

3.1 Definition of Specific Absorption Rate (SAR)

SAR is related to the rate at which energy is absorbed per unit mass in an object exposed to a radio field. The SAR distribution in a biological body is complicated and is usually carried out by experimental techniques or numerical modeling. The standard recommends limits for two tiers of groups, occupational/controlled and general population/uncontrolled, based on a person's awareness and ability to exercise control over his or her exposure. In general, occupational/controlled exposure limits are higher than the limits for general population/uncontrolled.

The SAR definition is the time derivative (rate) of the incremental energy (dW) absorbed by (dissipated in) an incremental mass (dm) contained in a volume element (dv) of a given density (ρ). The equation description is as below:

$$\mathbf{SAR} = \frac{\mathbf{d}}{\mathbf{dt}}\left(\frac{\mathbf{dW}}{\mathbf{dm}}\right) = \frac{\mathbf{d}}{\mathbf{dt}}\left(\frac{\mathbf{dW}}{\boldsymbol{\rho}\mathbf{dv}}\right)$$

SAR is expressed in units of Watts per kilogram (W/kg)

SAR measurement can be related to the electrical field in the tissue by

$$\mathbf{SAR} = \frac{\boldsymbol{\sigma}|\mathbf{E}|^2}{\boldsymbol{\rho}}$$

Where: σ is the conductivity of the tissue, ρ is the mass density of the tissue and E is the RMS electrical field strength.

3.2 SPEAG DASY52 System

DASY52 system consists of high precision robot, probe alignment sensor, phantom, robot controller, controlled measurement server and near-field probe. The robot includes six axes that can move to the precision position of the DASY52 software defined. The DASY52 software can define the area that is detected by the probe. The robot is connected to controlled box. Controlled measurement server is connected to the controlled robot box. The DAE includes amplifier, signal multiplexing, AD converter, offset measurement and surface detection. It is connected to the Electro-optical coupler (ECO). The ECO performs the conversion form the optical into digital electric signal of the DAE and transfers data to the PC.

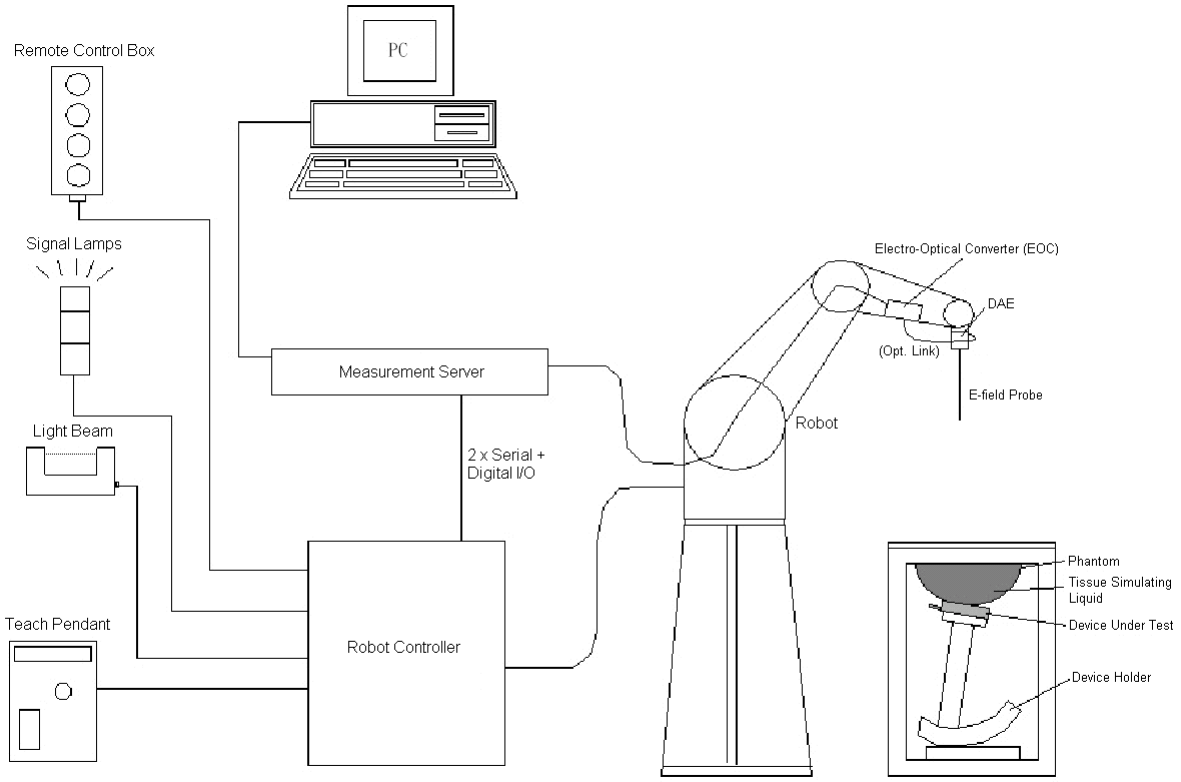

Fig-3.1 SPEAG DASY52 System Setup

3.2.1 Robot

The DASY52 systems use the high precision robots from Stäubli SA (France). For the 6-axis controller system, the robot controller version of CS8c from Stäubli is used. The Stäubli robot series have many features that are important for our application:

- High precision (repeatability ±0.035 mm)
- High reliability (industrial design)
- Jerk-free straight movements
- Low ELF interference (the closed metallic construction shields against motor control fields)

Fig-3.2 SPEAG DASY52 System

3.2.2 Probes

The SAR measurement is conducted with the dosimetric probe. The probe is specially designed and calibrated for use in liquid with high permittivity. The dosimetric probe has special calibration in liquid at different frequency.

Model	EX3DV4	
Construction	Symmetrical design with triangular core. Built-in shielding against static charges. PEEK enclosure material (resistant to organic solvents, e.g., DGBE).	
Frequency	10 MHz to 6 GHz Linearity: ± 0.2 dB	
Directivity	± 0.3 dB in HSL (rotation around probe axis) ± 0.5 dB in tissue material (rotation normal to probe axis)	
Dynamic Range	10 µW/g to 100 mW/g Linearity: ± 0.2 dB (noise: typically < 1 µW/g)	
Dimensions	Overall length: 337 mm (Tip: 20 mm) Tip diameter: 2.5 mm (Body: 12 mm) Typical distance from probe tip to dipole centers: 1 mm	

Model	ES3DV3	
Construction	Symmetrical design with triangular core. Interleaved sensors. Built-in shielding against static charges. PEEK enclosure material (resistant to organic solvents, e.g., DGBE).	
Frequency	10 MHz to 4 GHz Linearity: ± 0.2 dB	
Directivity	± 0.2 dB in HSL (rotation around probe axis) ± 0.3 dB in tissue material (rotation normal to probe axis)	
Dynamic Range	5 µW/g to 100 mW/g Linearity: ± 0.2 dB	
Dimensions	Overall length: 337 mm (Tip: 20 mm) Tip diameter: 3.9 mm (Body: 12 mm) Distance from probe tip to dipole centers: 2.0 mm	

Model	ET3DV6	
Construction	Symmetrical design with triangular core Built-in optical fiber for surface detection system. Built-in shielding against static charges. PEEK enclosure material (resistant to organic solvents, e.g., DGBE)	
Frequency	10 MHz to 2.3 GHz; Linearity: ± 0.2 dB	
Directivity	± 0.2 dB in TSL (rotation around probe axis) ± 0.4 dB in TSL (rotation normal to probe axis)	
Dynamic Range	5 µW/g to 100 mW/g; Linearity: ± 0.2 dB	
Dimensions	Overall length: 337 mm (Tip: 16 mm) Tip diameter: 6.8 mm (Body: 12 mm) Distance from probe tip to dipole centers: 2.7 mm	

3.2.3 Data Acquisition Electronics (DAE)

Model	DAE3, DAE4	
Construction	Signal amplifier, multiplexer, A/D converter and control logic. Serial optical link for communication with DASY embedded system (fully remote controlled). Two step probe touch detector for mechanical surface detection and emergency robot stop.	
Measurement Range	-100 to +300 mV (16 bit resolution and two range settings: 4mV, 400mV)	
Input Offset Voltage	< 5µV (with auto zero)	
Input Bias Current	< 50 fA	
Dimensions	60 x 60 x 68 mm	

3.2.4 Phantoms

Model	Twin SAM	
Construction	The shell corresponds to the specifications of the Specific Anthropomorphic Mannequin (SAM) phantom defined in IEEE 1528 and IEC 62209-1. It enables the dosimetric evaluation of left and right hand phone usage as well as body mounted usage at the flat phantom region. A cover prevents evaporation of the liquid. Reference markings on the phantom allow the complete setup of all predefined phantom positions and measurement grids by teaching three points with the robot.	
Material	Vinylester, glass fiber reinforced (VE-GF)	
Shell Thickness	2 ± 0.2 mm (6 ± 0.2 mm at ear point)	
Dimensions	Length: 1000 mm Width: 500 mm Height: adjustable feet	
Filling Volume	approx. 25 liters	

Model	ELI	
Construction	Phantom for compliance testing of handheld and body-mounted wireless devices in the frequency range of 30 MHz to 6 GHz. ELI is fully compatible with the IEC 62209-2 standard and all known tissue simulating liquids. ELI has been optimized regarding its performance and can be integrated into our standard phantom tables. A cover prevents evaporation of the liquid. Reference markings on the phantom allow installation of the complete setup, including all predefined phantom positions and measurement grids, by teaching three points. The phantom is compatible with all SPEAG dosimetric probes and dipoles.	
Material	Vinylester, glass fiber reinforced (VE-GF)	
Shell Thickness	2.0 ± 0.2 mm (bottom plate)	
Dimensions	Major axis: 600 mm Minor axis: 400 mm	
Filling Volume	approx. 30 liters	

3.2.5 Device Holder

Model	Mounting Device	
Construction	In combination with the Twin SAM Phantom or ELI4, the Mounting Device enables the rotation of the mounted transmitter device in spherical coordinates. Rotation point is the ear opening point. Transmitter devices can be easily and accurately positioned according to IEC, IEEE, FCC or other specifications. The device holder can be locked for positioning at different phantom sections (left head, right head, flat).	
Material	POM	

Model	Laptop Extensions Kit	
Construction	Simple but effective and easy-to-use extension for Mounting Device that facilitates the testing of larger devices according to IEC 62209-2 (e.g., laptops, cameras, etc.). It is lightweight and fits easily on the upper part of the Mounting Device in place of the phone positioner.	
Material	POM, Acrylic glass, Foam	

3.2.6 System Validation Dipoles

Model	D-Serial	
Construction	Symmetrical dipole with l/4 balun. Enables measurement of feed point impedance with NWA. Matched for use near flat phantoms filled with tissue simulating solutions.	
Frequency	750 MHz to 5800 MHz	
Return Loss	> 20 dB	
Power Capability	> 100 W (f < 1GHz), > 40 W (f > 1GHz)	

3.2.7 Tissue Simulating Liquids

For SAR measurement of the field distribution inside the phantom, the phantom must be filled with homogeneous tissue simulating liquid to a depth of at least 15 cm. For head SAR testing, the liquid height from the ear reference point (ERP) of the phantom to the liquid top surface is larger than 15 cm. For body SAR testing, the liquid height from the center of the flat phantom to the liquid top surface is larger than 15 cm. The nominal dielectric values of the tissue simulating liquids in the phantom and the tolerance of 5% are listed in Table-3.1.

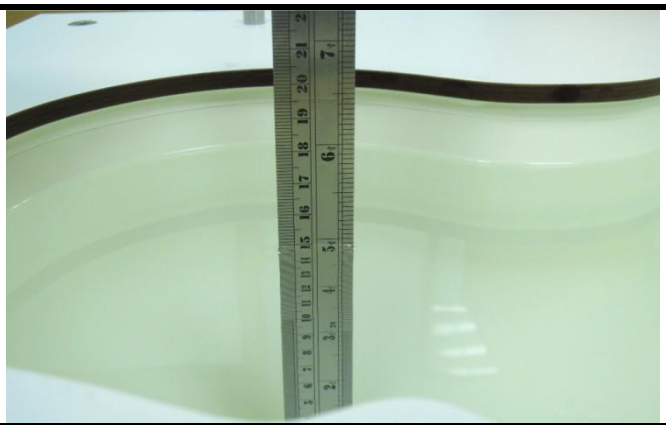	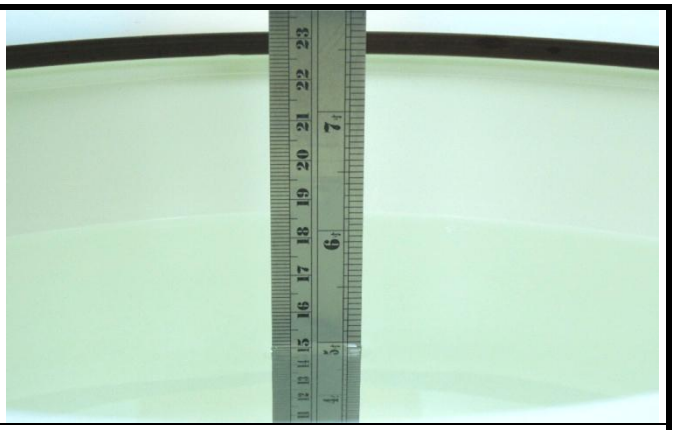
Photo of Liquid Height for Head Position	**Photo of Liquid Height for Body Position**

The dielectric properties of the head tissue simulating liquids are defined in IEEE 1528, and KDB 865664 D01 Appendix A. For the body tissue simulating liquids, the dielectric properties are defined in KDB 865664 D01 Appendix A. The dielectric properties of the tissue simulating liquids were verified prior to the SAR evaluation using a dielectric assessment kit and a network analyzer.

Table-3.1 Targets of Tissue Simulating Liquid

Frequency (MHz)	Target Permittivity	Range of ±5%	Target Conductivity	Range of ±5%
For Head				
750	41.9	39.8 ~ 44.0	0.89	0.85 ~ 0.93
835	41.5	39.4 ~ 43.6	0.90	0.86 ~ 0.95
900	41.5	39.4 ~ 43.6	0.97	0.92 ~ 1.02
1450	40.5	38.5 ~ 42.5	1.20	1.14 ~ 1.26
1640	40.3	38.3 ~ 42.3	1.29	1.23 ~ 1.35
1750	40.1	38.1 ~ 42.1	1.37	1.30 ~ 1.44
1800	40.0	38.0 ~ 42.0	1.40	1.33 ~ 1.47
1900	40.0	38.0 ~ 42.0	1.40	1.33 ~ 1.47
2000	40.0	38.0 ~ 42.0	1.40	1.33 ~ 1.47
2300	39.5	37.5 ~ 41.5	1.67	1.59 ~ 1.75
2450	39.2	37.2 ~ 41.2	1.80	1.71 ~ 1.89
2600	39.0	37.1 ~ 41.0	1.96	1.86 ~ 2.06
3500	37.9	36.0 ~ 39.8	2.91	2.76 ~ 3.06
5200	36.0	34.2 ~ 37.8	4.66	4.43 ~ 4.89
5300	35.9	34.1 ~ 37.7	4.76	4.52 ~ 5.00
5500	35.6	33.8 ~ 37.4	4.96	4.71 ~ 5.21
5600	35.5	33.7 ~ 37.3	5.07	4.82 ~ 5.32
5800	35.3	33.5 ~ 37.1	5.27	5.01 ~ 5.53
For Body				
750	55.5	52.7 ~ 58.3	0.96	0.91 ~ 1.01
835	55.2	52.4 ~ 58.0	0.97	0.92 ~ 1.02
900	55.0	52.3 ~ 57.8	1.05	1.00 ~ 1.10
1450	54.0	51.3 ~ 56.7	1.30	1.24 ~ 1.37
1640	53.8	51.1 ~ 56.5	1.40	1.33 ~ 1.47
1750	53.4	50.7 ~ 56.1	1.49	1.42 ~ 1.56
1800	53.3	50.6 ~ 56.0	1.52	1.44 ~ 1.60
1900	53.3	50.6 ~ 56.0	1.52	1.44 ~ 1.60
2000	53.3	50.6 ~ 56.0	1.52	1.44 ~ 1.60
2300	52.9	50.3 ~ 55.5	1.81	1.72 ~ 1.90
2450	52.7	50.1 ~ 55.3	1.95	1.85 ~ 2.05
2600	52.5	49.9 ~ 55.1	2.16	2.05 ~ 2.27
3500	51.3	48.7 ~ 53.9	3.31	3.14 ~ 3.48
5200	49.0	46.6 ~ 51.5	5.30	5.04 ~ 5.57
5300	48.9	46.5 ~ 51.3	5.42	5.15 ~ 5.69
5500	48.6	46.2 ~ 51.0	5.65	5.37 ~ 5.93
5600	48.5	46.1 ~ 50.9	5.77	5.48 ~ 6.06
5800	48.2	45.8 ~ 50.6	6.00	5.70 ~ 6.30

The following table gives the recipes for tissue simulating liquids.

Table-3.2 Recipes of Tissue Simulating Liquid

Tissue Type	Bactericide	DGBE	HEC	NaCl	Sucrose	Triton X-100	Water	Diethylene Glycol Mono-hexylether
H750	0.2	-	0.2	1.5	56.0	-	42.1	-
H835	0.2	-	0.2	1.5	57.0	-	41.1	-
H900	0.2	-	0.2	1.4	58.0	-	40.2	-
H1450	-	43.3	-	0.6	-	-	56.1	-
H1640	-	45.8	-	0.5	-	-	53.7	-
H1750	-	47.0	-	0.4	-	-	52.6	-
H1800	-	44.5	-	0.3	-	-	55.2	-
H1900	-	44.5	-	0.2	-	-	55.3	-
H2000	-	44.5	-	0.1	-	-	55.4	-
H2300	-	44.9	-	0.1	-	-	55.0	-
H2450	-	45.0	-	0.1	-	-	54.9	-
H2600	-	45.1	-	0.1	-	-	54.8	-
H3500	-	8.0	-	0.2	-	20.0	71.8	-
H5G	-	-	-	-	-	17.2	65.5	17.3
B750	0.2	-	0.2	0.8	48.8	-	50.0	-
B835	0.2	-	0.2	0.9	48.5	-	50.2	-
B900	0.2	-	0.2	0.9	48.2	-	50.5	-
B1450	-	34.0	-	0.3	-	-	65.7	-
B1640	-	32.5	-	0.3	-	-	67.2	-
B1750	-	31.0	-	0.2	-	-	68.8	-
B1800	-	29.5	-	0.4	-	-	70.1	-
B1900	-	29.5	-	0.3	-	-	70.2	-
B2000	-	30.0	-	0.2	-	-	69.8	-
B2300	-	31.0	-	0.1	-	-	68.9	-
B2450	-	31.4	-	0.1	-	-	68.5	-
B2600	-	31.8	-	0.1	-	-	68.1	-
B3500	-	28.8	-	0.1	-	-	71.1	-
B5G	-	-	-	-	-	10.7	78.6	10.7

3.3 SAR System Verification

The system check verifies that the system operates within its specifications. It is performed daily or before every SAR measurement. The system check uses normal SAR measurements in the flat section of the phantom with a matched dipole at a specified distance. The system verification setup is shown as below.

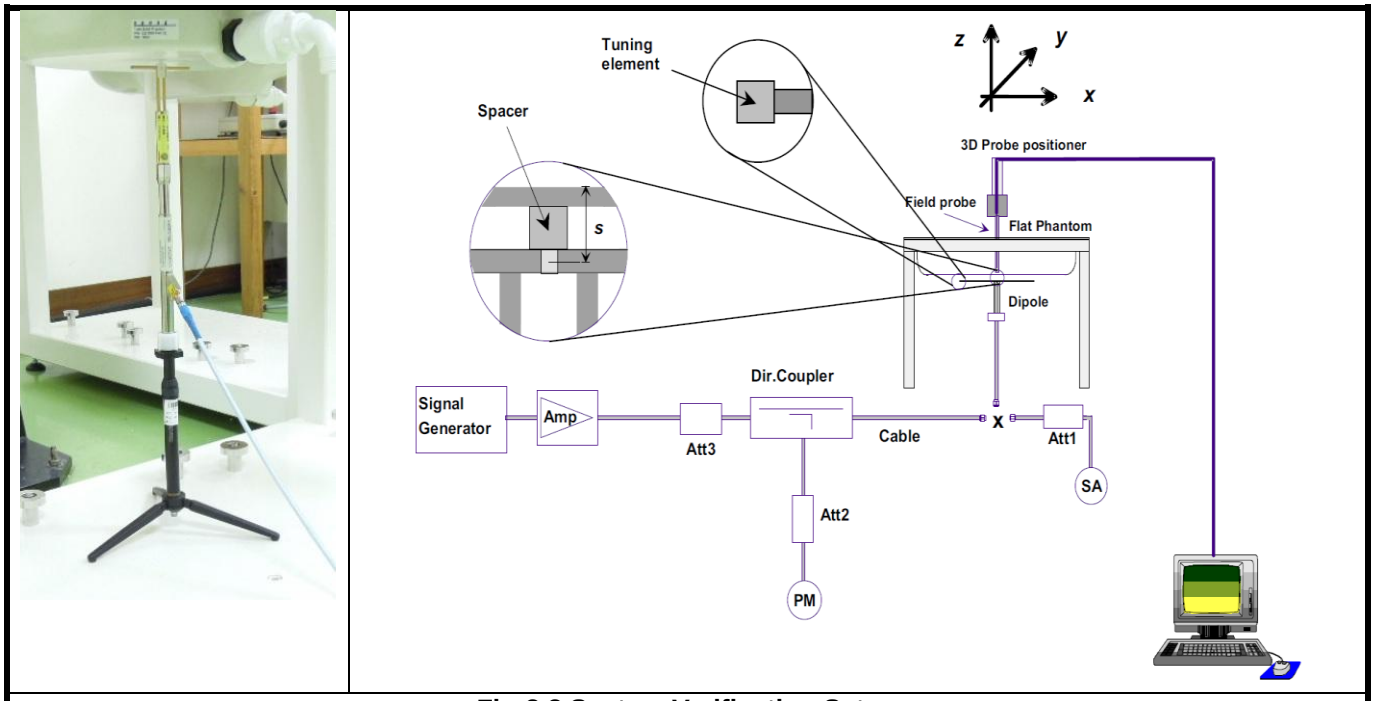

Fig-3.3 System Verification Setup

The validation dipole is placed beneath the flat phantom with the specific spacer in place. The distance spacer is touch the phantom surface with a light pressure at the reference marking and be oriented parallel to the long side of the phantom. The spectrum analyzer measures the forward power at the location of the system check dipole connector. The signal generator is adjusted for the desired forward power (250 mW is used for 700 MHz to 3 GHz, 100 mW is used for 3.5 GHz to 6 GHz) at the dipole connector and the power meter is read at that level. After connecting the cable to the dipole, the signal generator is readjusted for the same reading at power meter.

After system check testing, the SAR result will be normalized to 1W forward input power and compared with the reference SAR value derived from validation dipole certificate report. The deviation of system check should be within 10 %.

3.4 SAR Measurement Procedure

According to the SAR test standard, the recommended procedure for assessing the peak spatial-average SAR value consists of the following steps:

(a) Power reference measurement
(b) Area scan
(c) Zoom scan
(d) Power drift measurement

The SAR measurement procedures for each of test conditions are as follows:

(a) Make EUT to transmit maximum output power
(b) Measure conducted output power through RF cable
(c) Place the EUT in the specific position of phantom
(d) Perform SAR testing steps on the DASY system
(e) Record the SAR value

3.4.1 Area & Zoom Scan Procedure

First Area Scan is used to locate the approximate location(s) of the local peak SAR value(s). The measurement grid within an Area Scan is defined by the grid extent, grid step size and grid offset. Next, in order to determine the EM field distribution in a three-dimensional spatial extension, Zoom Scan is required. The Zoom Scan is performed around the highest E-field value to determine the averaged SAR-distribution over 10 g. According to KDB 865664 D01, the resolution for Area and Zoom scan is specified in the table below.

Items	<= 2 GHz	2-3 GHz	3-4 GHz	4-5 GHz	5-6 GHz
Area Scan (Δx, Δy)	<= 15 mm	<= 12 mm	<= 12 mm	<= 10 mm	<= 10 mm
Zoom Scan (Δx, Δy)	<= 8 mm	<= 5 mm	<= 5 mm	<= 4 mm	<= 4 mm
Zoom Scan (Δz)	<= 5 mm	<= 5 mm	<= 4 mm	<= 3 mm	<= 2 mm
Zoom Scan Volume	>= 30 mm	>= 30 mm	>= 28 mm	>= 25 mm	>= 22 mm

Note:

When zoom scan is required and report SAR is <= 1.4 W/kg, the zoom scan resolution of Δx / Δy (2-3GHz: <= 8 mm, 3-4GHz: <= 7 mm, 4-6GHz: <= 5 mm) may be applied.

3.4.2 Volume Scan Procedure

The volume scan is used for assess overlapping SAR distributions for antennas transmitting in different frequency bands. It is equivalent to an oversized zoom scan used in standalone measurements. The measurement volume will be used to enclose all the simultaneous transmitting antennas. For antennas transmitting simultaneously in different frequency bands, the volume scan is measured separately in each frequency band. In order to sum correctly to compute the 1g aggregate SAR, the EUT remain in the same test position for all measurements and all volume scan use the same spatial resolution and grid spacing. When all volume scan were completed, the software, SEMCAD postprocessor can combine and subsequently superpose these measurement data to calculating the multiband SAR.

3.4.3 Power Drift Monitoring

All SAR testing is under the EUT install full charged battery and transmit maximum output power. In DASY measurement software, the power reference measurement and power drift measurement procedures are used for monitoring the power drift of EUT during SAR test. Both these procedures measure the field at a specified reference position before and after the SAR testing. The software will calculate the field difference in dB. If the power drift more than 5%, the SAR will be retested.

3.4.4 Spatial Peak SAR Evaluation

The procedure for spatial peak SAR evaluation has been implemented according to the test standard. It can be conducted for 1g and 10g, as well as for user-specific masses. The DASY software includes all numerical procedures necessary to evaluate the spatial peak SAR value.

The base for the evaluation is a "cube" measurement. The measured volume must include the 1g and 10g cubes with the highest averaged SAR values. For that purpose, the center of the measured volume is aligned to the interpolated peak SAR value of a previously performed area scan.

The entire evaluation of the spatial peak values is performed within the post-processing engine (SEMCAD). The system always gives the maximum values for the 1g and 10g cubes. The algorithm to find the cube with highest averaged SAR is divided into the following stages:

(a) Extraction of the measured data (grid and values) from the Zoom Scan
(b) Calculation of the SAR value at every measurement point based on all stored data (A/D values and measurement parameters)
(c) Generation of a high-resolution mesh within the measured volume
(d) Interpolation of all measured values form the measurement grid to the high-resolution grid
(e) Extrapolation of the entire 3-D field distribution to the phantom surface over the distance from sensor to surface
(f) Calculation of the averaged SAR within masses of 1g and 10g

3.4.5 SAR Averaged Methods

In DASY, the interpolation and extrapolation are both based on the modified Quadratic Shepard’s method. The interpolation scheme combines a least-square fitted function method and a weighted average method which are the two basic types of computational interpolation and approximation.

Extrapolation routines are used to obtain SAR values between the lowest measurement points and the inner phantom surface. The extrapolation distance is determined by the surface detection distance and the probe sensor offset. The uncertainty increases with the extrapolation distance. To keep the uncertainty within 1% for the 1 g and 10 g cubes, the extrapolation distance should not be larger than 5 mm.

4. SAR Measurement Evaluation

4.1 EUT Configuration and Setting

<Connections between EUT and System Simulator>

For WWAN SAR testing, the EUT was linked and controlled by base station emulator. Communication between the EUT and the emulator was established by air link. The distance between the EUT and the communicating antenna of the emulator is larger than 50 cm and the output power radiated from the emulator antenna is at least 30 dB smaller than the output power of EUT. The EUT was set from the emulator to radiate maximum output power during SAR testing.

<Considerations Related to GSM / GPRS / EDGE for Setup and Testing>

The maximum multi-slot capability supported by this device is as below.

1. This EUT is class B device
2. This EUT supports GPRS multi-slot class 10 (max. uplink: 2, max. downlink: 4, total timeslots: 5)
3. This EUT supports EDGE multi-slot class 10 (max. uplink: 2, max. downlink: 4, total timeslots: 5)

For GSM850 frequency band, the power control level is set to 5 for GSM mode and GPRS (GMSK: CS1), and set to 8 for EDGE (GMSK: MCS1, 8PSK: MCS9). For GSM1900 frequency band, the power control level is set to 0 for GSM mode and GPRS (GMSK: CS1), and set to 2 for EDGE (GMSK: MCS1, 8PSK: MCS9).

SAR test reduction for GPRS and EDGE modes is determined by the source-based time-averaged output power specified for production units, including tune-up tolerance. The data mode with highest specified time-averaged output power should be tested for SAR compliance in the applicable exposure conditions. For modes with the same specified maximum output power and tolerance, the higher number time-slot configuration should be tested.

<Considerations Related to WCDMA for Setup and Testing>

WCDMA Handsets Head SAR

SAR for next to the ear head exposure is measured using a 12.2 kbps RMC with TPC bits configured to all “1’s”. The 3G SAR test reduction procedure is applied to AMR configurations with 12.2 kbps RMC as the primary mode.

WCDMA Handsets Body-worn SAR

SAR for body-worn configurations is measured using a 12.2 kbps RMC with TPC bits configured to all “1’s”. The 3G SAR test reduction procedure is applied to other spreading codes and multiple $DPDCH_n$ configurations supported by the handset with 12.2 kbps RMC as the primary mode.

Handsets with Release 5 HSDPA

The 3G SAR test reduction procedure is applied to HSDPA body-worn configurations with 12.2 kbps RMC as the primary mode. Otherwise, SAR is measured for HSDPA using the HSDPA body SAR procedures in the “Release 5 HSDPA Data Devices”, for the highest reported SAR body-worn exposure configuration in 12.2 kbps RMC. Handsets with both HSDPA and HSUPA are tested according to Release 6 HSPA test procedures.

Handsets with Release 6 HSUPA

The 3G SAR test reduction procedure is applied to HSPA (HSUPA/HSDPA with RMC) body-worn configurations with 12.2 kbps RMC as the primary mode. Otherwise, SAR is measured for HSPA using the HSPA body SAR procedures in the “Release 6 HSPA Data Devices”, for the highest reported body-worn exposure SAR configuration in 12.2 kbps RMC. When VOIP is applicable for next to the ear head exposure in HSPA, the 3G SAR test reduction procedure is applied to HSPA with 12.2 kbps RMC as the primary mode; otherwise, the same HSPA configuration used for body-worn measurements is tested for next to the ear head exposure.

Release 5 HSDPA Data Devices

The 3G SAR test reduction procedure is applied to body SAR with 12.2 kbps RMC as the primary mode. Otherwise, body SAR for HSDPA is measured using an FRC with H-Set 1 in Sub-test 1 and a 12.2 kbps RMC configured in Test Loop Mode 1, for the highest reported SAR configuration in 12.2 kbps RMC without HSDPA. HSDPA is configured according to the applicable UE category of a test device. The number of HS-DSCH / HS-PDSCHs, HARQ processes, minimum inter-TTI interval, transport block sizes and RV coding sequence are defined by the H-set. To maintain a consistent test configuration and stable transmission conditions, QPSK is used in the H-set for SAR testing. HS-DPCCH should be configured with a CQI feedback cycle of 4 ms and a CQI repetition factor of 2 to maintain a constant rate of active CQI slots. DPCCH and DPDCH gain factors (β_c, β_d), and HS-DPCCH power offset parameters (Δ_{ACK}, Δ_{NACK}, Δ_{CQI}) are set according to values indicated in below. The CQI value is determined by the UE category, transport block size, number of HS-PDSCHs and modulation used in the H-set.

Sub-test	β_c	β_d	β_d (SF)	β_c/β_d	β_{HS} (1)(2)	CM (3) (dB)	MPR (3) (dB)
1	2/15	15/15	64	2/15	4/15	0.0	0.0
2	12/15 (4)	15/15 (4)	64	12/15 (4)	24/15	1.0	0.0
3	15/15	8/15	64	15/8	30/15	1.5	0.5
4	15/15	4/15	64	15/4	30/15	1.5	0.5

Note 1: Δ_{ACK}, Δ_{NACK} and Δ_{CQI} = 30/15 with β_{HS} = 30/15 * β_c.
Note 2: For the HS-DPCCH power mask requirement test in clause 5.2C, 5.7A, and the Error Vector Magnitude (EVM) with HS-DPCCH test in clause 5.13.1A, and HSDPA EVM with phase discontinuity in clause 5.13.1AA, Δ_{ACK} and Δ_{NACK} = 30/15 with β_{HS} = 30/15 * β_c, and Δ_{CQI} = 24/15 with β_{HS} = 24/15 * β_c.
Note 3: CM = 1 for β_c/β_d = 12/15, β_{HS}/β_c = 24/15. For all other combinations of DPDCH, DPCCH and HS-DPCCH the MPR is based on the relative CM difference. This is applicable for only UEs that support HSDPA in release 6 and later releases.
Note 4: For subtest 2 the β_c/β_d ratio of 12/15 for the TFC during the measurement period (TF1, TF0) is achieved by setting the signalled gain factors for the reference TFC (TF1, TF1) to β_c = 11/15 and β_d = 15/15.

Release 6 HSUPA Data Devices

The 3G SAR test reduction procedure is applied to body SAR with 12.2 kbps RMC as the primary mode. Otherwise, body SAR for HSPA is measured with E-DCH Sub-test 5, using H-Set 1 and QPSK for FRC and a 12.2 kbps RMC configured in Test Loop Mode 1 and power control algorithm 2, according to the highest reported body SAR configuration in 12.2 kbps RMC without HSPA. When VOIP applies to head exposure, the 3G SAR test reduction procedure is applied with 12.2 kbps RMC as the primary mode. Otherwise, the same HSPA configuration used for body SAR measurements are applied to head exposure testing. Due to inner loop power control requirements in HSPA, a communication test set is required for output power and SAR tests. The 12.2 kbps RMC, FRC H-set 1 and E-DCH configurations for HSPA are configured according to the β values indicated in below.

Sub-test	β_c	β_d	β_d (SF)	β_c / β_d	β_{HS} (1)	β_{ec}	β_{ed} (4)(5)	β_{ed} (SF)	β_{ed} (Codes)	CM (2) (dB)	MPR (2)(6) (dB)	AG (5) Index	E-TFCI
1	11/15 (3)	15/15 (3)	64	11/15 (3)	22/15	209/225	1309/225	4	1	1.0	0.0	20	75
2	6/15	15/15	64	6/15	12/15	12/15	94/75	4	1	3.0	2.0	12	67
3	15/15	9/15	64	15/9	30/15	30/15	$\beta_{ed}1$: 47/15 $\beta_{ed}2$: 47/15	4 4	2	2.0	1.0	15	92
4	2/15	15/15	64	2/15	4/15	2/15	56/75	4	1	3.0	2.0	17	71
5	15/15	0	-	-	5/15	5/15	47/15	4	1	1.0	0.0	12	67

Note 1: For sub-test 1 to 4, Δ_{ACK}, Δ_{NACK} and Δ_{CQI} = 30/15 with β_{HS} = 30/15 * β_c. For sub-test 5, Δ_{ACK}, Δ_{NACK} and Δ_{CQI} = 5/15 with β_{HS} = 5/15 * β_c.
Note 2: CM = 1 for β_c/β_d = 12/15, β_{HS}/β_c = 24/15. For all other combinations of DPDCH, DPCCH, HS-DPCCH, E-DPDCH and E-DPCCH the MPR is based on the relative CM difference.
Note 3: For subtest 1 the β_c/β_d ratio of 11/15 for the TFC during the measurement period (TF1, TF0) is achieved by setting the signalled gain factors for the reference TFC (TF1, TF1) to β_c = 10/15 and β_d = 15/15.
Note 4: In case of testing by UE using E-DPDCH Physical Layer category 1, Sub-test 3 is omitted according to TS25.306 Table 5.1g.
Note 5: β_{ed} can not be set directly; it is set by Absolute Grant Value.
Note 6: For subtests 2, 3 and 4, UE may perform E-DPDCH power scaling at max power which could results in slightly smaller MPR values.

<Considerations Related to LTE for Setup and Testing>

This device contains LTE transmitter which follows 3GPP standards, is category 3, supports both QPSK and QAM modulations, and supported LTE band and channel bandwidth is listed in below. The output power was tested per 3GPP TS 36.521-1 maximum transmit procedures for both QPSK and QAM modulation. The results please refer to section 4.6 of this report.

EUT Supported LTE Band and Channel Bandwidth						
LTE Band	**BW 1.4 MHz**	**BW 3 MHz**	**BW 5 MHz**	**BW 10 MHz**	**BW 15 MHz**	**BW 20 MHz**
2	**V**	**V**	**V**	**V**	**V**	**V**
5	**V**	**V**	**V**	**V**		
7			**V**	**V**	**V**	**V**
26	**V**	**V**	**V**	**V**	**V**	
41			**V**	**V**	**V**	**V**

The LTE maximum power reduction (MPR) in accordance with 3GPP TS 36.101 is active all times during LTE operation. The allowed MPR for the maximum output power is specified in below.

Modulation	Channel Bandwidth / RB Configurations						LTE MPR Setting (dB)
	BW 1.4 MHz	BW 3 MHz	BW 5 MHz	BW 10 MHz	BW 15 MHz	BW 20 MHz	
QPSK	> 5	> 4	> 8	> 12	> 16	> 18	1
16QAM	<= 5	<= 4	<= 8	<= 12	<= 16	<= 18	1
16QAM	> 5	> 4	> 8	> 12	> 16	> 18	2
64QAM	<= 5	<= 4	<= 8	<= 12	<= 16	<= 18	2
64QAM	> 5	> 4	> 8	> 12	> 16	> 18	3
256QAM	>= 1						5

Note: MPR is according to the standard and implemented in the circuit (mandatory).

In addition, the device is compliant with additional maximum power reduction (A-MPR) requirements defined in 3GPP TS 36.101 section 6.2.4 that was disabled for all FCC compliance testing.

During LTE SAR testing, the related parameters of operating band, channel bandwidth, uplink channel number, modulation type, and RB was set in base station simulator. When the EUT has registered and communicated to base station simulator, the simulator set to make EUT transmitting the maximum radiated power.

TDD-LTE Setup Configurations

According to KDB 941225 D05, SAR testing for TDD-LTE device must be tested using a fixed periodic duty factor according to the highest transmission duty factor implemented for the device and supported by the defined 3GPP TDD-LTE configurations. The TDD-LTE of this device supports frame structure type 2 defined in 3GPP TS 36.211 section 4.2, and the frame structure configuration can be referred to below.

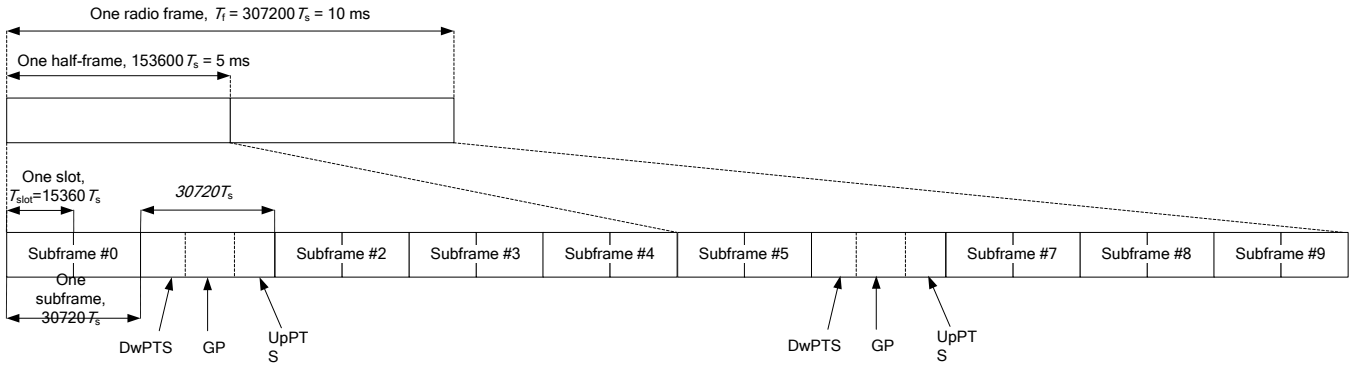

3GPP TS 36.211 Figure 4.2-1: Frame Structure Type 2

Special Subframe Configuration	Normal Cyclic Prefix in Downlink			Extended Cyclic Prefix in Downlink		
	DwPTS	UpPTS		DwPTS	UpPTS	
		Normal Cyclic Prefix in Uplink	Extended Cyclic Prefix in Uplink		Normal Cyclic Prefix in Uplink	Extended Cyclic Prefix in Uplink
0	6592 • Ts	2192 • Ts	2560 • Ts	7680 • Ts	2192 • Ts	2560 • Ts
1	19760 • Ts			20480 • Ts		
2	21952 • Ts			23040 • Ts		
3	24144 • Ts			25600 • Ts		
4	26336 • Ts			7680 • Ts	4384 • Ts	5120 • Ts
5	6592 • Ts	4384 • Ts	5120 • Ts	20480 • Ts		
6	19760 • Ts			23040 • Ts		
7	21952 • Ts			12800 • Ts		
8	24144 • Ts			-	-	-
9	13168 • Ts			-	-	-

3GPP TS 36.211 Table 4.2-1: Configuration of Special Subframe

Uplink-Downlink Configuration	Downlink-to-Uplink Switch-Point Periodicity	Subframe Number									
		0	1	2	3	4	5	6	7	8	9
0	5 ms	D	S	U	U	U	D	S	U	U	U
1	5 ms	D	S	U	U	D	D	S	U	U	D
2	5 ms	D	S	U	D	D	D	S	U	D	D
3	10 ms	D	S	U	U	U	D	D	D	D	D
4	10 ms	D	S	U	U	D	D	D	D	D	D
5	10 ms	D	S	U	D	D	D	D	D	D	D
6	5 ms	D	S	U	U	U	D	S	U	U	D

3GPP TS 36.211 Table 4.2-2: Uplink-Downlink Configurations

The variety of different TD-LTE uplink-downlink configurations allows a network operator to allocate the network's capacity between uplink and downlink traffic to meet the needs of the network. The uplink duty cycle of these seven configurations can readily be computed and shown in below.

UL-DL Configuration	0	1	2	3	4	5	6
Highest Duty-Cycle	63.33%	43.33%	23.33%	31.67%	21.67%	11.67%	53.33%

Considering the highest transmission duty cycle, TDD-LTE was tested using Uplink-Downlink Configuration 0 with 6 uplink subframe and 2 special subframe. The special subframe was set to special subframe configuration 7 using extended cyclic prefix uplink. Therefore, SAR testing for TDD-LTE was performed at the maximum output power with highest transmission duty cycle of 63.33%.

<Considerations Related to WLAN for Setup and Testing>

In general, various vendor specific external test software and chipset based internal test modes are typically used for SAR measurement. These chipset based test mode utilities are generally hardware and manufacturer dependent, and often include substantial flexibility to reconfigure or reprogram a device. A Wi-Fi device must be configured to transmit continuously at the required data rate, channel bandwidth and signal modulation, using the highest transmission duty factor supported by the test mode tools for SAR measurement. The test frequencies established using test mode must correspond to the actual channel frequencies. When 802.11 frame gaps are accounted for in the transmission, a maximum transmission duty factor of 92 - 96% is typically achievable in most test mode configurations. A minimum transmission duty factor of 85% is required to avoid certain hardware and device implementation issues related to wide range SAR scaling. In addition, a periodic transmission duty factor is required for current generation SAR systems to measure SAR correctly. The reported SAR must be scaled to 100% transmission duty factor to determine compliance at the maximum tune-up tolerance limit.

According to KDB 248227 D01, this device has installed WLAN engineering testing software which can provide continuous transmitting RF signal. During WLAN SAR testing, this device was operated to transmit continuously at the maximum transmission duty with specified transmission mode, operating frequency, lowest data rate, and maximum output power.

Initial Test Configuration

An initial test configuration is determined for OFDM transmission modes in 2.4 GHz and 5 GHz bands according to the channel bandwidth, modulation and data rate combination(s) with the highest maximum output power specified for production units in each standalone and aggregated frequency band. When the same maximum power is specified for multiple transmission modes in a frequency band, the largest channel bandwidth, lowest order modulation, lowest data rate and lowest order 802.11a/g/n/ac mode is used for SAR measurement, on the highest measured output power channel in the initial test configuration, for each frequency band.

Subsequent Test Configuration

SAR measurement requirements for the remaining 802.11 transmission mode configurations that have not been tested in the initial test configuration are determined separately for each standalone and aggregated frequency band, in each exposure condition, according to the maximum output power specified for production units. Additional power measurements may be required to determine if SAR measurements are required for subsequent highest output power channels in a subsequent test configuration. When the highest reported SAR for the initial test configuration according to the initial test position or fixed exposure position requirements, is adjusted by the ratio of the subsequent test configuration to initial test configuration specified maximum output power and the adjusted SAR is ≤ 1.2 W/kg, SAR is not required for that subsequent test configuration.

SAR Test Configuration and Channel Selection

When multiple channel bandwidth configurations in a frequency band have the same specified maximum output power, the initial test configuration is using largest channel bandwidth, lowest order modulation, lowest data rate, and lowest order 802.11 mode (i.e., 802.11a is chosen over 802.11n then 802.11ac or 802.11g is chosen over 802.11n). After an initial test configuration is determined, if multiple test channels have the same measured maximum output power, the channel chosen for SAR measurement is determined according to the following.

1) The channel closest to mid-band frequency is selected for SAR measurement.

2) For channels with equal separation from mid-band frequency; for example, high and low channels or two mid-band channels, the higher frequency (number) channel is selected for SAR measurement.

Test Reduction for U-NII-1 (5.2 GHz) and U-NII-2A (5.3 GHz) Bands

For devices that operate in both U-NII bands using the same transmitter and antenna(s), SAR test reduction is determined according to the following.

1) When the same maximum output power is specified for both bands, begin SAR measurement in U-NII-2A band by applying the OFDM SAR requirements. If the highest reported SAR for a test configuration is ≤ 1.2 W/kg, SAR is not required for U-NII-1 band for that configuration (802.11 mode and exposure condition).

2) When different maximum output power is specified for the bands, begin SAR measurement in the band with higher specified maximum output power. The highest reported SAR for the tested configuration is adjusted by the ratio of lower to higher specified maximum output power for the two bands. When the adjusted SAR is ≤ 1.2 W/kg, SAR is not required for the band with lower maximum output power in that test configuration.

<Considerations Related to Bluetooth for Setup and Testing>

This device has installed Bluetooth engineering testing software which can provide continuous transmitting RF signal. During Bluetooth SAR testing, this device was operated to transmit continuously at the maximum transmission duty with specified transmission mode, operating frequency, lowest data rate, and maximum output power.

4.2 EUT Testing Position

According to KDB 648474 D04, handsets are tested for SAR compliance in head, body-worn accessory and other use configurations described in the following subsections.

4.2.1 Head Exposure Conditions

Head exposure is limited to next to the ear voice mode operations. Head SAR compliance is tested according to the test positions defined in IEEE Std 1528-2003 using the SAM phantom illustrated as below.

1. Define two imaginary lines on the handset

(a) The vertical centerline passes through two points on the front side of the handset - the midpoint of the width w_t of the handset at the level of the acoustic output, and the midpoint of the width w_b of the bottom of the handset.

(b) The horizontal line is perpendicular to the vertical centerline and passes through the center of the acoustic output. The horizontal line is also tangential to the face of the handset at point A.

(c) The two lines intersect at point A. Note that for many handsets, point A coincides with the center of the acoustic output; however, the acoustic output may be located elsewhere on the horizontal line. Also note that the vertical centerline is not necessarily parallel to the front face of the handset, especially for clamshell handsets, handsets with flip covers, and other irregularly shaped handsets.

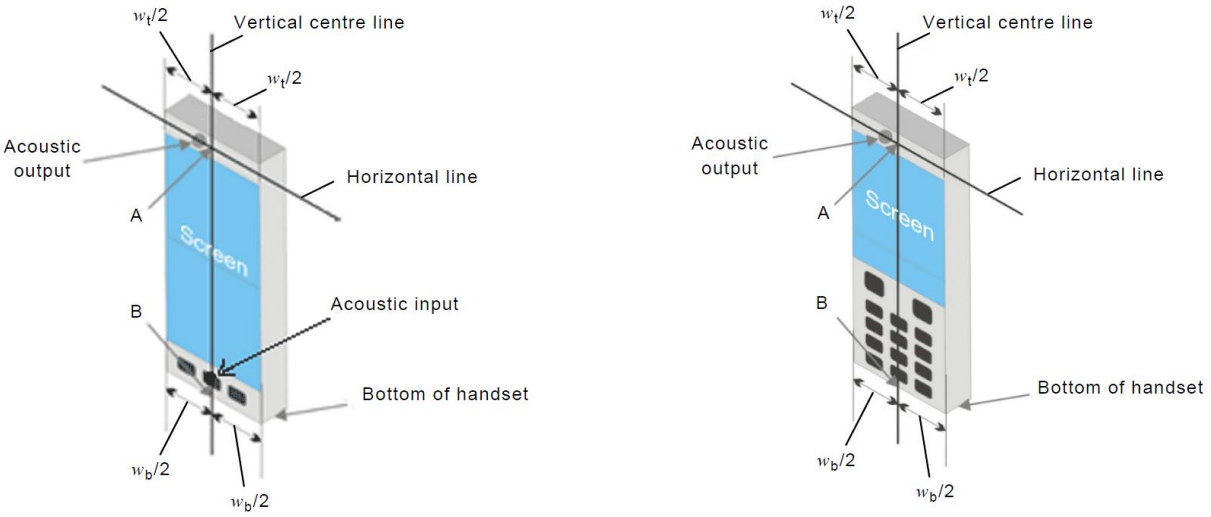

Fig-4.1 Illustration for Handset Vertical and Horizontal Reference Lines

2. Cheek Position

(a) To position the device with the vertical center line of the body of the device and the horizontal line crossing the center piece in a plane parallel to the sagittal plane of the phantom. While maintaining the device in this plane, align the vertical center line with the reference plane containing the three ear and mouth reference point (M: Mouth, RE: Right Ear, and LE: Left Ear) and align the center of the ear piece with the line RE-LE.

(b) To move the device towards the phantom with the ear piece aligned with the line LE-RE until the phone touched the ear. While maintaining the device in the reference plane and maintaining the phone contact with the ear, move the bottom of the phone until any point on the front side is in contact with the cheek of the phantom or until contact with the ear is lost (see Fig-4.2).

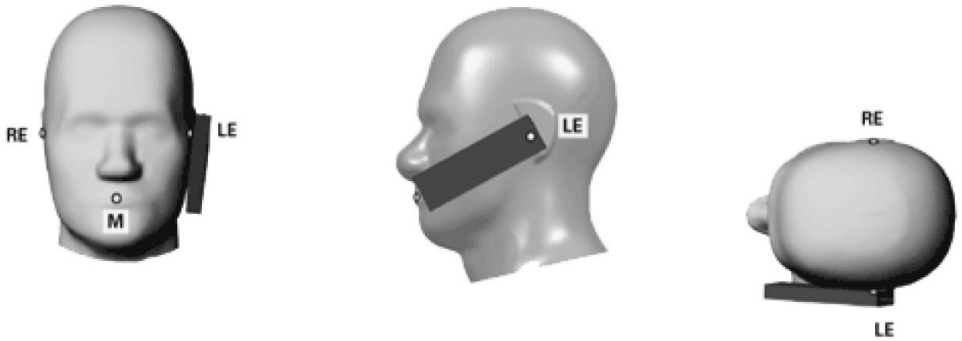

Fig-4.2 Illustration for Cheek Position

3. Tilted Position

(a) To position the device in the “cheek” position described above.

(b) While maintaining the device the reference plane described above and pivoting against the ear, moves it outward away from the mouth by an angle of 15 degrees or until contact with the ear is lost (see Fig-4.3).

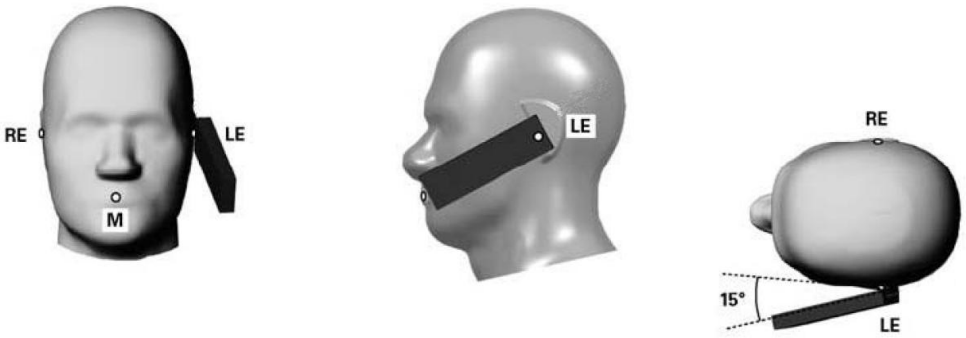

Fig-4.3 Illustration for Tilted Position

4.2.2 Body-worn Accessory Exposure Conditions

Body-worn accessory exposure is typically related to voice mode operations when handsets are carried in body-worn accessories. The body-worn accessory procedures in KDB 447498 D01 are used to test for body-worn accessory SAR compliance, without a headset connected to it. This enables the test results for such configuration to be compatible with that required for hotspot mode when the body-worn accessory test separation distance is greater than or equal to that required for hotspot mode. When the reported SAR for a body-worn accessory, measured without a headset connected to the handset, is > 1.2 W/kg, the highest reported SAR configuration for that wireless mode and frequency band should be repeated for that body-worn accessory with a headset attached to the handset.

Body-worn accessories that do not contain metallic or conductive components may be tested according to worst-case exposure configurations, typically according to the smallest test separation distance required for the group of body-worn accessories with similar operating and exposure characteristics. All body-worn accessories containing metallic components are tested in conjunction with the host device.

Body-worn accessory SAR compliance is based on a single minimum test separation distance for all wireless and operating modes applicable to each body-worn accessory used by the host, and according to the relevant voice and/or data mode transmissions and operations. If a body-worn accessory supports voice only operations in its normal and expected use conditions, testing of data mode for body-worn compliance is not required.

A conservative minimum test separation distance for supporting off-the-shelf body-worn accessories that may be acquired by users of consumer handsets is used to test for body-worn accessory SAR compliance. This distance is determined by the handset manufacturer, according to the requirements of Supplement C 01-01. Devices that are designed to operate on the body of users using lanyards and straps, or without requiring additional body-worn accessories, will be tested using a conservative minimum test separation distance <= 5 mm to support compliance.

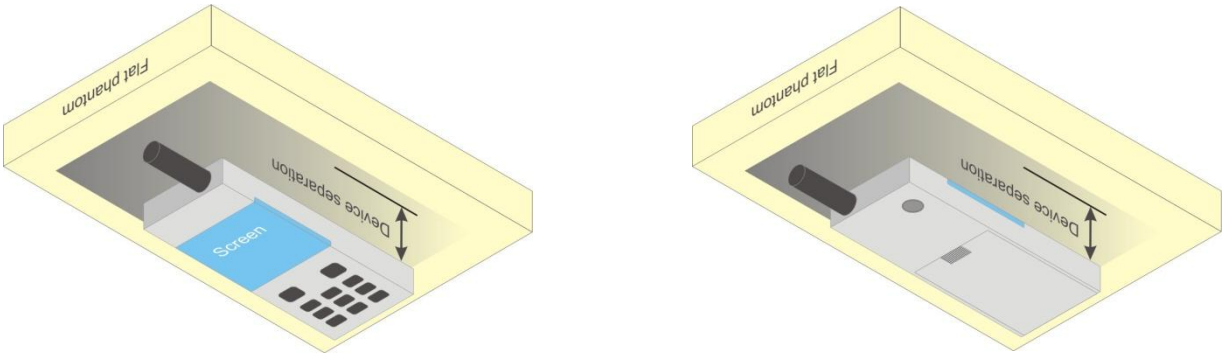

Fig-4.4 Illustration for Body Worn Position

4.2.3 Hotspot Mode Exposure Conditions

For handsets that support hotspot mode operations, with wireless router capabilities and various web browsing functions, the relevant hand and body exposure conditions are tested according to the hotspot SAR procedures in KDB 941225 D06. A test separation distance of 10 mm is required between the phantom and all surfaces and edges with a transmitting antenna located within 25 mm from that surface or edge. When the form factor of a handset is smaller than 9 cm x 5 cm, a test separation distance of 5 mm (instead of 10 mm) is required for testing hotspot mode. When the separation distance required for body-worn accessory testing is larger than or equal to that tested for hotspot mode, in the same wireless mode and for the same surface of the phone, the hotspot mode SAR data may be used to support body-worn accessory SAR compliance for that particular configuration (surface).

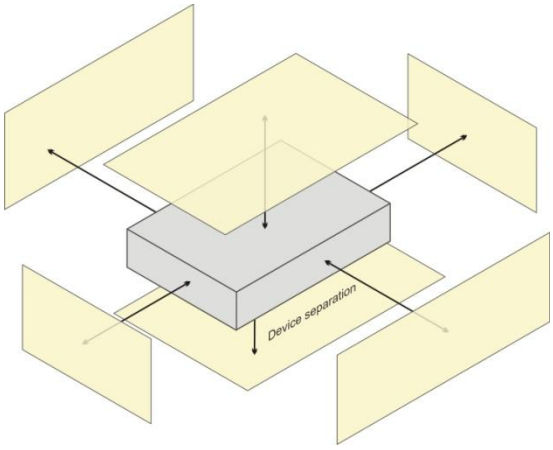

Based on the antenna location shown on appendix D of this report, the SAR testing required for hotspot mode is listed as below.

Antenna	Front Face	Rear Face	Left Side	Right Side	Top Side	Bottom Side
WWAN-0	V	V	V	V		V
WWAN-1	V	V	V	V	V	
WLAN / BT	V	V	V		V	

4.3 Tissue Verification

The measuring results for tissue simulating liquid are shown as below.

Test Date	Tissue Type	Frequency (MHz)	Liquid Temp. (℃)	Measured Conductivity (σ)	Measured Permittivity (ε_r)	Target Conductivity (σ)	Target Permittivity (ε_r)	Conductivity Deviation (%)	Permittivity Deviation (%)
Aug. 02, 2017	Head	835	23.4	0.919	41.738	0.90	41.5	2.11	0.57
Aug. 16, 2017	Head	835	23.2	0.909	41.672	0.90	41.5	1.00	0.41
Aug. 21, 2017	Head	835	23.1	0.909	42.669	0.90	41.5	1.00	2.82
Aug. 22, 2017	Head	835	23.1	0.919	41.747	0.90	41.5	2.11	0.60
Aug. 02, 2017	Head	1900	23.4	1.454	39.605	1.40	40.0	3.86	-0.99
Aug. 17, 2017	Head	1900	23.2	1.461	38.975	1.40	40.0	4.36	-2.56
Aug. 18, 2017	Head	1900	23.2	1.451	38.609	1.40	40.0	3.64	-3.48
Sep. 08, 2017	Head	1900	23.1	1.461	38.975	1.40	40.0	4.36	-2.56
Jul. 13, 2017	Head	2450	23.4	1.890	39.974	1.80	39.2	5.00	1.97
Sep. 13, 2017	Head	2450	23.2	1.874	39.818	1.80	39.2	4.11	1.58
Aug. 02, 2017	Head	2600	23.4	2.044	37.989	1.96	39.0	4.29	-2.59
Aug. 23, 2017	Head	2600	23.2	2.029	38.610	1.96	39.0	3.52	-1.00
Jul. 13, 2017	Head	5250	23.2	4.631	34.694	4.71	35.9	-1.68	-3.36
Sep. 13, 2017	Head	5300	23.2	4.664	34.489	4.76	35.9	-2.02	-3.93
Jul. 13, 2017	Head	5600	23.2	4.964	34.172	5.07	35.5	-2.09	-3.74
Sep. 13, 2017	Head	5600	23.3	4.956	34.103	5.07	35.5	-2.25	-3.94
Jul. 13, 2017	Head	5800	23.2	5.176	33.874	5.27	35.3	-1.78	-4.04
Sep. 13, 2017	Head	5800	23.3	5.156	33.831	5.27	35.3	-2.16	-4.16
Aug. 01, 2017	Body	835	23.5	1.012	56.702	0.97	55.2	4.33	2.72
Aug. 02, 2017	Body	835	23.4	1.014	55.974	0.97	55.2	4.54	1.40
Aug. 17, 2017	Body	835	23.2	0.996	56.233	0.97	55.2	2.68	1.87
Aug. 22, 2017	Body	835	23.2	1.016	55.340	0.97	55.2	4.74	0.25
Sep. 07, 2017	Body	835	23.1	0.968	54.990	0.97	55.2	-0.21	-0.38
Sep. 08, 2017	Body	835	23.2	0.984	55.349	0.97	55.2	1.44	0.27
Aug. 01, 2017	Body	1900	23.5	1.556	51.466	1.52	53.3	2.37	-3.44
Aug. 17, 2017	Body	1900	23.2	1.579	51.132	1.52	53.3	3.88	-4.07
Aug. 21, 2017	Body	1900	23.1	1.582	50.698	1.52	53.3	4.08	-4.88
Sep. 08, 2017	Body	1900	23.2	1.582	51.601	1.52	53.3	4.08	-3.19
Sep. 11, 2017	Body	1900	23.2	1.585	52.818	1.52	53.3	4.28	-0.90
Jul. 14, 2017	Body	2450	23.3	1.997	51.558	1.95	52.7	2.41	-2.17
Sep. 11, 2017	Body	2450	23.1	1.997	51.524	1.95	52.7	2.41	-2.23
Aug. 02, 2017	Body	2600	23.4	2.169	50.963	2.16	52.5	0.42	-2.93
Aug. 14, 2017	Body	2600	23.2	2.192	50.137	2.16	52.5	1.48	-4.50
Aug. 23, 2017	Body	2600	23.3	2.172	50.865	2.16	52.5	0.56	-3.11
Sep. 11, 2017	Body	5200	23.1	5.416	47.007	5.30	49.0	2.19	-4.07
Jul. 14, 2017	Body	5250	23.3	5.395	47.266	5.36	48.9	0.65	-3.34
Sep. 11, 2017	Body	5300	23.1	5.541	46.822	5.42	48.9	2.23	-4.25
Sep. 11, 2017	Body	5600	23.2	5.935	46.347	5.77	48.5	2.86	-4.44
Jul. 14, 2017	Body	5800	23.3	6.110	46.403	6.00	48.2	1.83	-3.73
Sep. 11, 2017	Body	5800	23.3	6.216	45.997	6.00	48.2	3.60	-4.57

Note:

The dielectric properties of the tissue simulating liquid must be measured within 24 hours before the SAR testing and within ±5% of the target values. Liquid temperature during the SAR testing must be within ±2 ℃.

4.4 System Validation

The SAR measurement system was validated according to procedures in KDB 865664 D01. The validation status in tabulated summary is as below.

Test Date	Probe S/N	Calibration Point		Measured Conductivity (σ)	Measured Permittivity (ε_r)	Validation for CW			Validation for Modulation		
						Sensitivity Range	Probe Linearity	Probe Isotropy	Modulation Type	Duty Factor	PAR
Aug. 02, 2017	3971	Head	835	0.919	41.738	Pass	Pass	Pass	N/A	N/A	N/A
Aug. 16, 2017	3971	Head	835	0.909	41.672	Pass	Pass	Pass	GMSK	Pass	N/A
Aug. 21, 2017	7351	Head	835	0.909	42.669	Pass	Pass	Pass	N/A	N/A	N/A
Aug. 22, 2017	7351	Head	835	0.919	41.747	Pass	Pass	Pass	N/A	N/A	N/A
Aug. 02, 2017	3971	Head	1900	1.454	39.605	Pass	Pass	Pass	N/A	N/A	N/A
Aug. 17, 2017	7351	Head	1900	1.461	38.975	Pass	Pass	Pass	N/A	N/A	N/A
Aug. 18, 2017	7351	Head	1900	1.451	38.609	Pass	Pass	Pass	GMSK	Pass	N/A
Sep. 08, 2017	3650	Head	1900	1.461	38.975	Pass	Pass	Pass	N/A	N/A	N/A
Jul. 13, 2017	7351	Head	2450	1.890	39.974	Pass	Pass	Pass	OFDM	N/A	Pass
Sep. 13, 2017	3650	Head	2450	1.874	39.818	Pass	Pass	Pass	OFDM	N/A	Pass
Aug. 02, 2017	7351	Head	2600	2.044	37.989	Pass	Pass	Pass	N/A	N/A	N/A
Aug. 23, 2017	7351	Head	2600	2.029	38.610	Pass	Pass	Pass	N/A	N/A	N/A
Jul. 13, 2017	3753	Head	5250	4.631	34.694	Pass	Pass	Pass	OFDM	N/A	Pass
Sep. 13, 2017	1277	Head	5300	4.664	34.489	Pass	Pass	Pass	OFDM	N/A	Pass
Jul. 13, 2017	3753	Head	5600	4.964	34.172	Pass	Pass	Pass	OFDM	N/A	Pass
Sep. 13, 2017	1277	Head	5600	4.956	34.103	Pass	Pass	Pass	OFDM	N/A	Pass
Jul. 13, 2017	3753	Head	5800	5.176	33.874	Pass	Pass	Pass	OFDM	N/A	Pass
Sep. 13, 2017	1277	Head	5800	5.156	33.831	Pass	Pass	Pass	OFDM	N/A	Pass
Aug. 01, 2017	7375	Body	835	1.012	56.702	Pass	Pass	Pass	N/A	N/A	N/A
Aug. 02, 2017	3971	Body	835	1.014	55.974	Pass	Pass	Pass	N/A	N/A	N/A
Aug. 17, 2017	7351	Body	835	0.996	56.233	Pass	Pass	Pass	N/A	N/A	N/A
Aug. 22, 2017	7351	Body	835	1.016	55.340	Pass	Pass	Pass	N/A	N/A	N/A
Sep. 07, 2017	7375	Body	835	0.968	54.990	Pass	Pass	Pass	GMSK	Pass	N/A
Sep. 08, 2017	1790	Body	835	0.984	55.349	Pass	Pass	Pass	N/A	N/A	N/A
Aug. 01, 2017	7375	Body	1900	1.556	51.466	Pass	Pass	Pass	N/A	N/A	N/A
Aug. 17, 2017	7351	Body	1900	1.579	51.132	Pass	Pass	Pass	N/A	N/A	N/A
Aug. 21, 2017	7351	Body	1900	1.582	50.698	Pass	Pass	Pass	N/A	N/A	N/A
Sep. 08, 2017	1790	Body	1900	1.582	51.601	Pass	Pass	Pass	N/A	N/A	N/A
Sep. 11, 2017	7375	Body	1900	1.585	52.818	Pass	Pass	Pass	GMSK	Pass	N/A
Jul. 14, 2017	3753	Body	2450	1.997	51.558	Pass	Pass	Pass	OFDM	N/A	Pass
Sep. 11, 2017	7375	Body	2450	1.997	51.524	Pass	Pass	Pass	OFDM	N/A	Pass
Aug. 02, 2017	3971	Body	2600	2.169	50.963	Pass	Pass	Pass	N/A	N/A	N/A
Aug. 14, 2017	3971	Body	2600	2.192	50.137	Pass	Pass	Pass	N/A	N/A	N/A
Aug. 23, 2017	3650	Body	2600	2.172	50.865	Pass	Pass	Pass	N/A	N/A	N/A
Sep. 11, 2017	7375	Body	5200	5.416	47.007	Pass	Pass	Pass	OFDM	N/A	Pass
Jul. 14, 2017	3971	Body	5250	5.395	47.266	Pass	Pass	Pass	OFDM	N/A	Pass
Sep. 11, 2017	7375	Body	5300	5.541	46.822	Pass	Pass	Pass	OFDM	N/A	Pass
Sep. 11, 2017	7375	Body	5600	5.935	46.347	Pass	Pass	Pass	OFDM	N/A	Pass
Jul. 14, 2017	3971	Body	5800	6.110	46.403	Pass	Pass	Pass	OFDM	N/A	Pass
Sep. 11, 2017	7375	Body	5800	6.216	45.997	Pass	Pass	Pass	OFDM	N/A	Pass

4.5 System Verification

The measuring result for system verification is tabulated as below.

Test Date	Mode	Frequency (MHz)	1W Target SAR-1g (W/kg)	Measured SAR-1g (W/kg)	Normalized to 1W SAR-1g (W/kg)	Deviation (%)	Dipole S/N	Probe S/N	DAE S/N
Aug. 02, 2017	Head	835	9.40	2.23	8.92	-5.11	4d121	3971	579
Aug. 16, 2017	Head	835	9.38	2.32	9.28	-1.07	4d092	3971	916
Aug. 21, 2017	Head	835	9.38	2.41	9.64	2.77	4d092	7351	861
Aug. 22, 2017	Head	835	9.38	2.44	9.76	4.05	4d092	7351	861
Aug. 02, 2017	Head	1900	40.20	9.88	39.52	-1.69	5d036	3971	579
Aug. 17, 2017	Head	1900	40.20	10.00	40.00	-0.50	5d036	7351	861
Aug. 18, 2017	Head	1900	40.20	9.95	39.80	-1.00	5d036	7351	861
Sep. 08, 2017	Head	1900	40.20	10.60	42.40	5.47	5d036	3650	1277
Jul. 13, 2017	Head	2450	52.60	13.70	54.80	4.18	737	7351	1431
Sep. 13, 2017	Head	2450	52.90	13.50	54.00	2.08	869	3650	1277
Aug. 02, 2017	Head	2600	58.10	14.60	58.40	0.52	1020	7351	861
Aug. 23, 2017	Head	2600	57.00	14.00	56.00	-1.75	1058	7351	861
Jul. 13, 2017	Head	5250	79.60	7.76	77.60	-2.51	1019	3753	916
Sep. 13, 2017	Head	5300	76.40	7.82	78.20	2.36	1203	3650	1277
Jul. 13, 2017	Head	5600	82.40	8.10	81.00	-1.70	1019	3753	916
Sep. 13, 2017	Head	5600	77.40	7.65	76.50	-1.16	1203	3650	1277
Jul. 13, 2017	Head	5800	79.40	8.16	81.60	2.77	1019	3753	916
Sep. 13, 2017	Head	5800	74.10	7.52	75.20	1.48	1203	3650	1277
Aug. 01, 2017	Body	835	9.57	2.26	9.04	-5.54	4d121	7375	1431
Aug. 02, 2017	Body	835	9.57	2.42	9.68	1.15	4d121	3971	579
Aug. 17, 2017	Body	835	9.57	2.41	9.64	0.73	4d121	7351	861
Aug. 22, 2017	Body	835	9.60	2.52	10.08	5.00	4d092	7351	861
Sep. 07, 2017	Body	835	9.60	2.27	9.08	-5.42	4d092	7375	1431
Sep. 08, 2017	Body	835	9.60	2.26	9.04	-5.83	4d092	1790	917
Aug. 01, 2017	Body	1900	40.10	9.76	39.04	-2.64	5d036	7375	1431
Aug. 17, 2017	Body	1900	40.10	9.96	39.84	-0.65	5d036	7351	861
Aug. 21, 2017	Body	1900	40.10	10.10	40.40	0.75	5d036	7351	861
Sep. 08, 2017	Body	1900	40.10	10.50	42.00	4.74	5d0.36	1790	917
Sep. 11, 2017	Body	1900	40.10	9.93	39.72	-0.95	5d036	7375	1431
Jul. 14, 2017	Body	2450	51.10	12.00	48.00	-6.07	737	3753	916
Sep. 11, 2017	Body	2450	51.60	12.50	50.00	-3.10	869	7375	1431
Aug. 02, 2017	Body	2600	55.70	13.50	54.00	-3.05	1020	3971	579
Aug. 14, 2017	Body	2600	54.30	13.40	53.60	-1.29	1058	3971	916
Aug. 23, 2017	Body	2600	54.30	13.30	53.20	-2.03	1058	3650	1277
Sep. 11, 2017	Body	5200	71.50	7.54	75.40	5.45	1203	7375	1431
Jul. 14, 2017	Body	5250	77.60	7.29	72.90	-6.06	1019	3971	579
Sep. 11, 2017	Body	5300	76.40	8.10	81.00	6.02	1203	7375	1431
Sep. 11, 2017	Body	5600	77.40	8.16	81.60	5.43	1203	7375	1431
Jul. 14, 2017	Body	5800	77.30	7.76	77.60	0.39	1019	3971	579
Sep. 11, 2017	Body	5800	74.10	7.73	77.30	4.32	1203	7375	1431

Note:

Comparing to the reference SAR value provided by SPEAG, the validation data should be within its specification of 10 %. The result indicates the system check can meet the variation criterion and the plots can be referred to Appendix A of this report.

4.6 Maximum Output Power

4.6.1 Power Reduction information

< WWAN >

Position	ANT	850	1900	II	V	2	5	7	26	41
Head	0	w/o	w/o	w/o	w/o	w/o	w/o	w/o	w/o	w/o
	1	w/	w/	w/	w/	w/	w/		w/	
Hotspot	0	w/o	w/	w/	w/o	w/	w/o	w/o	w/o	w/o
	1	w/	w/o	w/o	w/o	w/o	w/o		w/o	
Body-worn	0	w/o								
	1									

Note : WWAN antenna 1 does not support LTE Band 7/41 .

< WLAN >

Position	2.4G + 5G
Head	w/
Hotspot	w/o
Body-worn	w/o

4.6.2 Maximum Target Conducted Power

The maximum conducted average power (Unit: dBm) including tune-up tolerance is shown as below.

< GSM850_ANT0 >

Mode	Maximum Burst-Averaged Output Power	Maximum Frame-Averaged Output Power
	GSM850	GSM850
GSM (GMSK, 1Tx-slot)	33.0	24.0
GPRS (GMSK, 1Tx-slot)	33.0	24.0
GPRS (GMSK, 2Tx-slot)	**32.0**	26.0
EDGE (8PSK, 1Tx-slot)	27.0	18.0
EDGE (8PSK, 2Tx-slot)	27.0	21.0

< GSM850_ANT1 >

Mode	Maximum Burst-Averaged Output Power		Maximum Frame-Averaged Output Power		Power Reduction (dB)
	GSM850 (without Power Reduction)	GSM850 (with Power Reduction)	GSM850 (without Power Reduction)	GSM850 (with Power Reduction)	
GSM (GMSK, 1Tx-slot)	33.0	28.0	24.0	19.0	5.0
GPRS (GMSK, 1Tx-slot)	33.0	28.0	24.0	19.0	5.0
GPRS (GMSK, 2Tx-slot)	**32.0**	**28.0**	26.0	22.0	4.0
EDGE (8PSK, 1Tx-slot)	27.0	27.0	18.0	18.0	0.0
EDGE (8PSK, 2Tx-slot)	27.0	27.0	21.0	21.0	0.0

< GSM1900_ANT0 >

Mode	Maximum Burst-Averaged Output Power		Maximum Frame-Averaged Output Power		Power Reduction (dB)
	GSM1900 (without Power Reduction)	GSM1900 (with Power Reduction)	GSM1900 (without Power Reduction)	GSM1900 (with Power Reduction)	
	Head Mode – Voice only (receiver-on)	Hotspot Mode – Data only	Head Mode – Voice only (receiver-on)	Hotspot Mode – Data only	
GSM (GMSK, 1Tx-slot)	30.0	27.0	21.0	18.0	3.0
GPRS (GMSK, 1Tx-slot)	30.0	27.0	21.0	18.0	3.0
GPRS (GMSK, 2Tx-slot)	**30.0**	**26.5**	24.0	20.5	3.5
EDGE (8PSK, 1Tx-slot)	25.0	24.0	16.0	15.0	1.0
EDGE (8PSK, 2Tx-slot)	25.0	24.0	19.0	18.0	1.0

< GSM1900_ANT1 >

Mode	Maximum Burst-Averaged Output Power		Maximum Frame-Averaged Output Power		Power Reduction (dB)
	GSM1900 (without Power Reduction)	GSM1900 (with Power Reduction)	GSM1900 (without Power Reduction)	GSM1900 (with Power Reduction)	
	Hotspot Mode – Data only	Head Mode – Voice only (receiver-on)	Hotspot Mode – Data only	Head Mode – Voice only (receiver-on)	
GSM (GMSK, 1Tx-slot)	30.0	27.0	21.0	18.0	3.0
GPRS (GMSK, 1Tx-slot)	30.0	27.0	21.0	18.0	3.0
GPRS (GMSK, 2Tx-slot)	**30.0**	**27.0**	24.0	21.0	3.0
EDGE (8PSK, 1Tx-slot)	25.0	25.0	16.0	16.0	0.0
EDGE (8PSK, 2Tx-slot)	25.0	25.0	19.0	19.0	0.0

Note:

1. SAR testing was performed on the maximum frame-averaged power mode.
2. The frame-averaged power is linearly proportion to the slot number configured and it is linearly scaled the maximum burst-averaged power based on time slots. The calculated method is shown as below:
   Frame-averaged power = 10 x log (Burst-averaged power mW x Slot used / 8)

< WCDMA Band II_ANT0 >

Mode	WCDMA Band II (without Power Reduction)	WCDMA Band II (with Power Reduction)	Power Reduction (dB)
	Head Mode – Voice only (receiver-on)	Hotspot Mode – Data only	
RMC 12.2K	**25.0**	**22.0**	3.0
HSDPA / HSUPA / DC-HSDPA	24.0	21.0	3.0

< WCDMA Band II_ANT1 >

Mode	WCDMA Band II (without Power Reduction)	WCDMA Band II (with Power Reduction)	Power Reduction (dB)
	Hotspot Mode – Data only	Head Mode – Voice only (receiver-on)	
RMC 12.2K	**25.0**	**23.0**	2.0
HSDPA / HSUPA / DC-HSDPA	24.0	22.0	2.0

< WCDMA Band V_ANT0 >

Mode	WCDMA Band V
RMC 12.2K	**24.0**
HSDPA / HSUPA / DC-HSDPA	24.0

< WCDMA Band V_ANT1 >

Mode	WCDMA Band V (without Power Reduction)	WCDMA Band V (with Power Reduction)	Power Reduction (dB)
	Hotspot Mode – Data only	Head Mode – Voice only (receiver-on)	
RMC 12.2K	**24.0**	**21.0**	3.0
HSDPA / HSUPA / DC-HSDPA	24.0	20.0	4.0

< LTE 2_ANT0 >

Mode	LTE 2 (without Power Reduction)	LTE 2 (with Power Reduction)	Power Reduction (dB)
	Head Mode – Voice only (receiver-on)	Hotspot Mode – Data only	
Maximum Target Power	**24.0**	**21.0**	3.0

< LTE 2_ANT1 >

Mode	LTE 2 (without Power Reduction)	LTE 2 (with Power Reduction)	Power Reduction (dB)
	Hotspot Mode – Data only	Head Mode – Voice only (receiver-on)	
Maximum Target Power	**24.0**	**22.0**	2.0

< LTE 5_ANT0 >

Mode	LTE 5
Maximum Target Power	**24.0**

< LTE 5_ANT1 >

Mode	LTE 5 (without Power Reduction) Hotspot Mode – Data only	LTE 5 (with Power Reduction) Head Mode – Voice only (receiver-on)	Power Reduction (dB)
Maximum Target Power	**24.0**	**21.0**	3.0

< LTE 7_ANT0 >

Mode	LTE 7
Maximum Target Power	**23.0**

< LTE 26_ANT0 >

Mode	LTE 26
Maximum Target Power	**24.0**

< LTE 26_ANT1 >

Mode	LTE 26 (without Power Reduction) Hotspot Mode – Data only	LTE 26 (with Power Reduction) Head Mode – Voice only (receiver-on)	Power Reduction (dB)
Maximum Target Power	**24.0**	**21.0**	3.0

< LTE 41_ANT0 >

Mode	LTE 41
Maximum Target Power	**24.0**

Mode	2.4G WLAN (without Power Reduction) Hotspot Mode – Data only	2.4G WLAN (with Power Reduction) Head Mode – Voice only (receiver-on)	Power Reduction (dB)
802.11b	**17.5**	**10.5**	7
802.11g	Ch 1~ 12 17.5 Ch 13 0	Ch 1 ~ 12 10.5 Ch 13 0	7 0
802.11n HT20	Ch 1~ 12 17.5 Ch 13 0	Ch 1 ~ 12 10.5 Ch 13 0	7 0

Mode	5.2G WLAN (without Power Reduction) Hotspot Mode – Data only	5.2G WLAN (with Power Reduction) Head Mode – Voice only (receiver-on)	Power Reduction (dB)
802.11a	17.5	10.5	7
802.11n HT20	17.5	10.5	7
802.11n HT40	**17.5**	10.5	7
802.11ac VHT80	16.5	9.5	7

Mode	5.3G WLAN (without Power Reduction)	5.3G WLAN (with Power Reduction) Head Mode – Voice only (receiver-on)	Power Reduction (dB)
802.11a	17.5	10.5	7
802.11n HT20	17.5	10.5	7
802.11n HT40	**17.5**	**10.5**	7
802.11ac VHT80	16.5	9.5	7

Mode	5.6G WLAN (without Power Reduction)	5.6G WLAN (with Power Reduction) Head Mode – Voice only (receiver-on)	Power Reduction (dB)
802.11a	17.5	8	9.5
802.11n HT20	17.5	8	9.5
802.11n HT40	**17.5**	**8**	9.5
802.11ac VHT80	16.5	7.5	9

Mode	5.8G WLAN (without Power Reduction) Hotspot Mode – Data only	5.8G WLAN (with Power Reduction) Head Mode – Voice only (receiver-on)	Power Reduction (dB)
802.11a	17.5	9	8.5
802.11n HT20	17.5	9	8.5
802.11n HT40	**17.5**	**9**	8.5
802.11ac VHT80	16.5	8.5	8

Mode	2.4G Bluetooth
Bluetooth	**10.5**

4.6.3 Measured Conducted Power Result

The measuring conducted average power (Unit: dBm) is shown as below.

Band	GSM850			GSM1900		
Channel	128	189	251	512	661	810
Frequency (MHz)	824.2	836.4	848.8	1850.2	1880.0	1909.8
EUT without Power Reduction (Ant-0 / Ant-1)						
Maximum Burst-Averaged Output Power						
GSM (GMSK, 1Tx-slot)	32.10	**32.13**	32.07	**29.86**	29.79	29.67
GPRS (GMSK, 1Tx-slot)	32.04	32.07	32.01	29.85	29.78	29.66
GPRS (GMSK, 2Tx-slot)	31.95	**31.98**	31.92	**29.79**	29.72	29.60
EDGE (8PSK, 1Tx-slot)	26.62	26.65	26.59	24.98	24.97	24.85
EDGE (8PSK, 2Tx-slot)	26.40	26.43	26.37	25.00	24.93	24.81
EUT with Power Reduction (Ant-1_Head Mode – Voice only (receiver-on))						
Maximum Burst-Averaged Output Power						
GSM (GMSK, 1Tx-slot)	27.95	**27.97**	27.56	**26.35**	26.33	26.31
GPRS (GMSK, 1Tx-slot)	27.85	27.87	27.46	26.33	26.31	26.29
GPRS (GMSK, 2Tx-slot)	27.67	**27.69**	27.28	**26.27**	26.25	26.23
EDGE (8PSK, 1Tx-slot)	27.19	27.21	26.80	26.29	26.27	26.25
EDGE (8PSK, 2Tx-slot)	27.11	27.13	26.72	26.19	26.17	26.15
EUT with Power Reduction (Ant-0_Hotspot Mode – Data only)						
Maximum Burst-Averaged Output Power						
GSM (GMSK, 1Tx-slot)				26.25	26.17	26.03
GPRS (GMSK, 1Tx-slot)				26.19	26.11	25.98
GPRS (GMSK, 2Tx-slot)				**26.10**	26.02	25.89
EDGE (8PSK, 1Tx-slot)				23.79	23.71	23.58
EDGE (8PSK, 2Tx-slot)				23.76	23.68	23.55

Band	WCDMA Band II			WCDMA Band V			3GPP MPR (dB)
Channel	9262	9400	9538	4132	4182	4233	
Frequency (MHz)	1852.4	1880.0	1907.6	826.4	836.4	846.6	
EUT without Power Reduction (Ant-0 / Ant-1)							
RMC 12.2K	24.59	24.57	**24.83**	23.93	**23.96**	23.88	-
HSDPA Subtest-1	23.53	23.51	23.77	22.96	22.99	22.91	0
HSDPA Subtest-2	23.55	23.53	23.79	22.99	23.02	22.94	0
HSDPA Subtest-3	23.03	23.01	23.27	22.49	22.52	22.44	0.5
HSDPA Subtest-4	23.05	23.03	23.29	22.48	22.51	22.43	0.5
HSUPA Subtest-1	23.58	23.56	23.82	22.88	22.91	22.83	0
HSUPA Subtest-2	21.60	21.58	21.84	20.90	20.93	20.85	2
HSUPA Subtest-3	22.59	22.57	22.83	21.88	21.91	21.83	1
HSUPA Subtest-4	21.57	21.55	21.81	20.89	20.92	20.84	2
HSUPA Subtest-5	23.57	23.55	23.81	22.88	22.91	22.83	0
EUT with Power Reduction (Ant-1_Head Mode – Voice only (receiver-on))							
RMC 12.2K	22.43	22.61	**22.99**	20.68	**20.71**	20.65	-
HSDPA Subtest-1	21.40	21.58	21.96	19.55	19.58	19.52	-
HSDPA Subtest-2	21.38	21.56	21.94	19.52	19.55	19.49	-
HSDPA Subtest-3	20.95	21.13	21.51	19.12	19.15	19.09	-
HSDPA Subtest-4	20.97	21.15	21.53	19.09	19.12	19.06	-
HSUPA Subtest-1	21.34	21.52	21.90	19.40	19.43	19.37	-
HSUPA Subtest-2	19.44	19.62	20.00	17.49	17.52	17.46	-
HSUPA Subtest-3	20.40	20.58	20.96	18.49	18.52	18.46	-
HSUPA Subtest-4	19.37	19.55	19.93	17.52	17.55	17.49	-
HSUPA Subtest-5	21.38	21.56	21.94	19.48	19.51	19.45	-
EUT with Power Reduction (Ant-0_Hotspot Mode – Data only)							
RMC 12.2K	21.87	21.75	**21.99**				-
HSDPA Subtest-1	20.85	20.73	20.97				-
HSDPA Subtest-2	20.83	20.71	20.95				-
HSDPA Subtest-3	20.40	20.28	20.52				-
HSDPA Subtest-4	20.43	20.31	20.55				-
HSUPA Subtest-1	20.90	20.78	21.02				-
HSUPA Subtest-2	18.83	18.71	18.95				-
HSUPA Subtest-3	19.89	19.77	20.01				-
HSUPA Subtest-4	18.60	18.48	18.72				-
HSUPA Subtest-5	20.83	20.71	20.95				-

Band / BW	RB Size	RB Offset	QPSK Low CH 18607 1850.7 MHz	QPSK Mid CH 18900 1880.0 MHz	QPSK High CH 19193 1909.3 MHz	3GPP MPR (dB)	16QAM Low CH 18607 1850.7 MHz	16QAM Mid CH 18900 1880.0 MHz	16QAM High CH 19193 1909.3 MHz	3GPP MPR (dB)
EUT without Power Reduction (Ant-0 / Ant-1)										
2 / 1.4M	1	0	23.55	23.63	23.61	0	22.49	22.57	22.55	1
	1	2	23.51	23.59	23.57	0	22.45	22.53	22.51	1
	1	5	23.49	23.57	23.55	0	22.43	22.51	22.49	1
	3	0	22.53	22.61	22.59	0	21.47	21.55	21.53	1
	3	1	22.49	22.57	22.55	0	21.43	21.51	21.49	1
	3	3	22.40	22.48	22.46	0	21.34	21.42	21.40	1
	6	0	22.50	22.58	22.56	1	21.44	21.52	21.50	2
EUT with Power Reduction (Ant-1_Head Mode – Voice only (receiver-on))										
2 / 1.4M	1	0	21.20	21.42	21.40	0	20.15	20.37	20.35	1
	1	2	21.17	21.39	21.37	0	20.12	20.34	20.32	1
	1	5	21.12	21.34	21.32	0	20.07	20.29	20.27	1
	3	0	20.14	20.36	20.34	0	19.09	19.31	19.29	1
	3	1	20.07	20.29	20.27	0	19.02	19.24	19.22	1
	3	3	20.06	20.28	20.26	0	19.01	19.23	19.21	1
	6	0	20.08	20.30	20.28	1	19.03	19.25	19.23	2
EUT with Power Reduction (Ant-0_Hotspot Mode – Data only)										
2 / 1.4M	1	0	20.69	20.81	20.80	0	19.63	19.75	19.74	1
	1	2	20.61	20.73	20.72	0	19.55	19.67	19.66	1
	1	5	20.57	20.69	20.68	0	19.51	19.63	19.62	1
	3	0	20.26	20.38	20.37	0	19.20	19.32	19.31	1
	3	1	20.20	20.32	20.31	0	19.14	19.26	19.25	1
	3	3	20.07	20.19	20.18	0	19.01	19.13	19.12	1
	6	0	19.67	19.79	19.78	1	18.61	18.73	18.72	2

Band / BW	RB Size	RB Offset	QPSK			3GPP MPR (dB)	16QAM			3GPP MPR (dB)
			Low CH 18615	Mid CH 18900	High CH 19185		Low CH 18615	Mid CH 18900	High CH 19185	
			1851.5 MHz	1880.0 MHz	1908.5 MHz		1851.5 MHz	1880.0 MHz	1908.5 MHz	
EUT without Power Reduction (Ant-0 / Ant-1)										
2 / 3M	1	0	23.63	23.71	23.69	0	22.57	22.65	22.63	1
	1	7	23.59	23.67	23.65	0	22.53	22.61	22.59	1
	1	14	23.57	23.65	23.63	0	22.51	22.59	22.57	1
	8	0	22.61	22.69	22.67	1	21.55	21.63	21.61	2
	8	3	22.57	22.65	22.63	1	21.51	21.59	21.57	2
	8	7	22.48	22.56	22.54	1	21.42	21.50	21.48	2
	15	0	22.58	22.66	22.64	1	21.52	21.60	21.58	2
EUT with Power Reduction (Ant-1_Head Mode – Voice only (receiver-on))										
2 / 3M	1	0	21.28	21.50	21.48	0	20.23	20.45	20.43	1
	1	7	21.25	21.47	21.45	0	20.20	20.42	20.40	1
	1	14	21.20	21.42	21.40	0	20.15	20.37	20.35	1
	8	0	20.22	20.44	20.42	1	19.17	19.39	19.37	2
	8	3	20.15	20.37	20.35	1	19.10	19.32	19.30	2
	8	7	20.14	20.36	20.34	1	19.09	19.31	19.29	2
	15	0	20.16	20.38	20.36	1	19.11	19.33	19.31	2
EUT with Power Reduction (Ant-0_Hotspot Mode – Data only)										
2 / 3M	1	0	20.71	20.83	20.82	0	19.65	19.77	19.76	1
	1	7	20.63	20.75	20.74	0	19.57	19.69	19.68	1
	1	14	20.59	20.71	20.70	0	19.53	19.65	19.64	1
	8	0	19.78	19.90	19.89	1	18.72	18.84	18.83	2
	8	3	19.72	19.84	19.83	1	18.66	18.78	18.77	2
	8	7	19.59	19.71	19.70	1	18.53	18.65	18.64	2
	15	0	19.69	19.81	19.80	1	18.63	18.75	18.74	2

Band / BW	RB Size	RB Offset	QPSK			3GPP MPR (dB)	16QAM			3GPP MPR (dB)
			Low CH 18625	Mid CH 18900	High CH 19175		Low CH 18625	Mid CH 18900	High CH 19175	
			1852.5 MHz	1880.0 MHz	1907.5 MHz		1852.5 MHz	1880.0 MHz	1907.5 MHz	
EUT without Power Reduction (Ant-0 / Ant-1)										
2 / 5M	1	0	23.71	23.79	23.77	0	22.65	22.73	22.71	1
	1	12	23.67	23.75	23.73	0	22.61	22.69	22.67	1
	1	24	23.65	23.73	23.71	0	22.59	22.67	22.65	1
	12	0	22.69	22.77	22.75	1	21.63	21.71	21.69	2
	12	6	22.65	22.73	22.71	1	21.59	21.67	21.65	2
	12	13	22.56	22.64	22.62	1	21.50	21.58	21.56	2
	25	0	22.66	22.74	22.72	1	21.60	21.68	21.66	2
EUT with Power Reduction (Ant-1_Head Mode – Voice only (receiver-on))										
2 / 5M	1	0	21.34	21.56	21.54	0	20.29	20.51	20.49	1
	1	12	21.31	21.53	21.51	0	20.26	20.48	20.46	1
	1	24	21.26	21.48	21.46	0	20.21	20.43	20.41	1
	12	0	20.28	20.50	20.48	1	19.23	19.45	19.43	2
	12	6	20.21	20.43	20.41	1	19.16	19.38	19.36	2
	12	13	20.20	20.42	20.40	1	19.15	19.37	19.35	2
	25	0	20.22	20.44	20.42	1	19.17	19.39	19.37	2
EUT with Power Reduction (Ant-0_Hotspot Mode – Data only)										
2 / 5M	1	0	20.76	20.88	20.87	0	19.70	19.82	19.81	1
	1	12	20.68	20.80	20.79	0	19.62	19.74	19.73	1
	1	24	20.64	20.76	20.75	0	19.58	19.70	19.69	1
	12	0	19.83	19.95	19.94	1	18.77	18.89	18.88	2
	12	6	19.77	19.89	19.88	1	18.71	18.83	18.82	2
	12	13	19.64	19.76	19.75	1	18.58	18.70	18.69	2
	25	0	19.74	19.86	19.85	1	18.68	18.80	18.79	2

Band / BW	RB Size	RB Offset	QPSK			3GPP MPR (dB)	16QAM			3GPP MPR (dB)
			Low CH 18650	Mid CH 18900	High CH 19150		Low CH 18650	Mid CH 18900	High CH 19150	
			1855.0 MHz	1880.0 MHz	1905.0 MHz		1855.0 MHz	1880.0 MHz	1905.0 MHz	
EUT without Power Reduction (Ant-0 / Ant-1)										
2 / 10M	1	0	23.78	23.86	23.84	0	22.72	22.80	22.78	1
	1	24	23.74	23.82	23.80	0	22.68	22.76	22.74	1
	1	49	23.72	23.80	23.78	0	22.66	22.74	22.72	1
	25	0	22.76	22.84	22.82	1	21.70	21.78	21.76	2
	25	12	22.72	22.80	22.78	1	21.66	21.74	21.72	2
	25	25	22.63	22.71	22.69	1	21.57	21.65	21.63	2
	50	0	22.73	22.81	22.79	1	21.67	21.75	21.73	2
EUT with Power Reduction (Ant-1_Head Mode – Voice only (receiver-on))										
2 / 10M	1	0	21.41	21.63	21.61	0	20.36	20.58	20.56	1
	1	24	21.38	21.60	21.58	0	20.33	20.55	20.53	1
	1	49	21.33	21.55	21.53	0	20.28	20.50	20.48	1
	25	0	20.35	20.57	20.55	1	19.30	19.52	19.50	2
	25	12	20.28	20.50	20.48	1	19.23	19.45	19.43	2
	25	25	20.27	20.49	20.47	1	19.22	19.44	19.42	2
	50	0	20.29	20.51	20.49	1	19.24	19.46	19.44	2
EUT with Power Reduction (Ant-0_Hotspot Mode – Data only)										
2 / 10M	1	0	20.79	20.91	20.90	0	19.73	19.85	19.84	1
	1	24	20.71	20.83	20.82	0	19.65	19.77	19.76	1
	1	49	20.67	20.79	20.78	0	19.61	19.73	19.72	1
	25	0	19.86	19.98	19.97	1	18.80	18.92	18.91	2
	25	12	19.80	19.92	19.91	1	18.74	18.86	18.85	2
	25	25	19.67	19.79	19.78	1	18.61	18.73	18.72	2
	50	0	19.77	19.89	19.88	1	18.71	18.83	18.82	2

Band / BW	RB Size	RB Offset	QPSK			3GPP MPR (dB)	16QAM			3GPP MPR (dB)
			Low CH 18675	Mid CH 18900	High CH 19125		Low CH 18675	Mid CH 18900	High CH 19125	
			1857.5 MHz	1880.0 MHz	1902.5 MHz		1857.5 MHz	1880.0 MHz	1902.5 MHz	
EUT without Power Reduction (Ant-0 / Ant-1)										
2 / 15M	1	0	23.85	23.93	23.91	0	22.79	22.87	22.85	1
	1	37	23.81	23.89	23.87	0	22.75	22.83	22.81	1
	1	74	23.79	23.87	23.85	0	22.73	22.81	22.79	1
	36	0	22.83	22.91	22.89	1	21.77	21.85	21.83	2
	36	19	22.79	22.87	22.85	1	21.73	21.81	21.79	2
	36	39	22.70	22.78	22.76	1	21.64	21.72	21.70	2
	75	0	22.80	22.88	22.86	1	21.74	21.82	21.80	2
EUT with Power Reduction (Ant-1_Head Mode – Voice only (receiver-on))										
2 / 15M	1	0	21.46	21.68	21.66	0	20.41	20.63	20.61	1
	1	37	21.43	21.65	21.63	0	20.38	20.60	20.58	1
	1	74	21.38	21.60	21.58	0	20.33	20.55	20.53	1
	36	0	20.40	20.62	20.60	1	19.35	19.57	19.55	2
	36	19	20.33	20.55	20.53	1	19.28	19.50	19.48	2
	36	39	20.32	20.54	20.52	1	19.27	19.49	19.47	2
	75	0	20.34	20.56	20.54	1	19.29	19.51	19.49	2
EUT with Power Reduction (Ant-0_Hotspot Mode – Data only)										
2 / 15M	1	0	20.84	20.96	20.95	0	19.78	19.90	19.89	1
	1	37	20.76	20.88	20.87	0	19.70	19.82	19.81	1
	1	74	20.72	20.84	20.83	0	19.66	19.78	19.77	1
	36	0	19.91	20.03	20.02	1	18.85	18.97	18.96	2
	36	19	19.85	19.97	19.96	1	18.79	18.91	18.90	2
	36	39	19.72	19.84	19.83	1	18.66	18.78	18.77	2
	75	0	19.82	19.94	19.93	1	18.76	18.88	18.87	2

Band / BW	RB Size	RB Offset	QPSK			3GPP MPR (dB)	16QAM			3GPP MPR (dB)
			Low CH 18700	Mid CH 18900	High CH 19100		Low CH 18700	Mid CH 18900	High CH 19100	
			1860.0 MHz	1880.0 MHz	1900.0 MHz		1860.0 MHz	1880.0 MHz	1900.0 MHz	
EUT without Power Reduction (Ant-0 / Ant-1)										
2 / 20M	1	0	23.91	**23.99**	23.97	0	22.85	22.93	22.91	1
	1	50	23.87	23.95	23.93	0	22.81	22.89	22.87	1
	1	99	23.85	23.93	23.91	0	22.79	22.87	22.85	1
	50	0	22.89	22.97	22.95	1	21.83	21.91	21.89	2
	50	25	22.85	22.93	22.91	1	21.79	21.87	21.85	2
	50	50	22.76	22.84	22.82	1	21.70	21.78	21.76	2
	100	0	22.86	22.94	22.92	1	21.80	21.88	21.86	2
EUT with Power Reduction (Ant-1_Head Mode – Voice only (receiver-on))										
2 / 20M	1	0	21.53	**21.75**	21.73	0	20.48	20.70	20.68	1
	1	50	21.50	21.72	21.70	0	20.45	20.67	20.65	1
	1	99	21.45	21.67	21.65	0	20.40	20.62	20.60	1
	50	0	20.47	20.69	20.67	1	19.42	19.64	19.62	2
	50	25	20.40	20.62	20.60	1	19.35	19.57	19.55	2
	50	50	20.39	20.61	20.59	1	19.34	19.56	19.54	2
	100	0	20.41	20.63	20.61	1	19.36	19.58	19.56	2
EUT with Power Reduction (Ant-0_Hotspot Mode – Data only)										
2 / 20M	1	0	20.87	**20.99**	20.98	0	19.81	19.93	19.92	1
	1	50	20.79	20.91	20.90	0	19.73	19.85	19.84	1
	1	99	20.75	20.87	20.86	0	19.69	19.81	19.80	1
	50	0	19.94	19.98	19.90	1	18.88	19.00	18.99	2
	50	25	19.88	20.00	19.99	1	18.82	18.94	18.93	2
	50	50	19.75	19.87	19.86	1	18.69	18.81	18.80	2
	100	0	19.85	19.97	19.96	1	18.79	18.91	18.90	2

Band / BW	RB Size	RB Offset	QPSK			3GPP MPR (dB)	16QAM			3GPP MPR (dB)
			Low CH 20407	Mid CH 20525	High CH 20643		Low CH 20407	Mid CH 20525	High CH 20643	
			824.7 MHz	836.5 MHz	848.3 MHz		824.7 MHz	836.5 MHz	848.3 MHz	
EUT without Power Reduction (Ant-0 / Ant-1)										
5 / 1.4M	1	0	23.07	23.09	23.14	0	21.99	22.01	22.06	1
	1	2	23.03	23.05	23.10	0	21.95	21.97	22.02	1
	1	5	23.01	23.03	23.08	0	21.93	21.95	22.00	1
	3	0	22.11	22.13	22.18	0	21.03	21.05	21.10	1
	3	1	22.07	22.09	22.14	0	21.01	21.01	21.06	1
	3	3	22.10	22.12	22.17	0	21.02	21.04	21.09	1
	6	0	22.09	22.11	22.16	1	21.01	21.03	21.08	2
EUT with Power Reduction (Ant-1_Head Mode – Voice only (receiver-on))										
5 / 1.4M	1	0	20.73	20.67	20.77	0	19.68	19.62	19.72	1
	1	2	20.69	20.63	20.73	0	19.64	19.58	19.68	1
	1	5	20.64	20.58	20.68	0	19.59	19.53	19.63	1
	3	0	19.73	19.67	19.77	0	18.68	18.62	18.72	1
	3	1	19.71	19.65	19.75	0	18.66	18.60	18.70	1
	3	3	19.69	19.63	19.73	0	18.64	18.58	18.68	1
	6	0	19.70	19.64	19.74	1	18.65	18.59	18.69	2

Band / BW	RB Size	RB Offset	QPSK			3GPP MPR (dB)	16QAM			3GPP MPR (dB)
			Low CH 20415	Mid CH 20525	High CH 20635		Low CH 20415	Mid CH 20525	High CH 20635	
			825.5 MHz	836.5 MHz	847.5 MHz		825.5 MHz	836.5 MHz	847.5 MHz	
EUT without Power Reduction (Ant-0 / Ant-1)										
5 / 3M	1	0	23.10	23.12	23.17	0	22.02	22.04	22.09	1
	1	7	23.06	23.08	23.13	0	21.98	22.00	22.05	1
	1	14	23.04	23.06	23.11	0	21.96	21.98	22.03	1
	8	0	22.14	22.16	22.21	1	21.06	21.08	21.13	2
	8	3	22.10	22.12	22.17	1	21.02	21.04	21.09	2
	8	7	22.13	22.15	22.20	1	21.05	21.07	21.12	2
	15	0	22.12	22.14	22.19	1	21.04	21.06	21.11	2
EUT with Power Reduction (Ant-1_Head Mode – Voice only (receiver-on))										
5 / 3M	1	0	20.79	20.73	20.83	0	19.74	19.68	19.78	1
	1	7	20.75	20.69	20.79	0	19.70	19.64	19.74	1
	1	14	20.70	20.64	20.74	0	19.65	19.59	19.69	1
	8	0	19.79	19.73	19.83	1	18.74	18.68	18.78	2
	8	3	19.77	19.71	19.81	1	18.72	18.66	18.76	2
	8	7	19.75	19.69	19.79	1	18.70	18.64	18.74	2
	15	0	19.76	19.70	19.80	1	18.71	18.65	18.75	2

Band / BW	RB Size	RB Offset	QPSK			3GPP MPR (dB)	16QAM			3GPP MPR (dB)
			Low CH 20425	Mid CH 20525	High CH 20625		Low CH 20425	Mid CH 20525	High CH 20625	
			826.5 MHz	836.5 MHz	846.5 MHz		826.5 MHz	836.5 MHz	846.5 MHz	
EUT without Power Reduction (Ant-0 / Ant-1)										
5 / 5M	1	0	23.13	23.15	23.20	0	22.05	22.07	22.12	1
	1	12	23.09	23.11	23.16	0	22.01	22.03	22.08	1
	1	24	23.07	23.09	23.14	0	21.99	22.01	22.06	1
	12	0	22.17	22.19	22.24	1	21.09	21.11	21.16	2
	12	6	22.13	22.15	22.20	1	21.05	21.07	21.12	2
	12	13	22.16	22.18	22.23	1	21.08	21.10	21.15	2
	25	0	22.15	22.17	22.22	1	21.07	21.09	21.14	2
EUT with Power Reduction (Ant-1_Head Mode – Voice only (receiver-on))										
5 / 5M	1	0	20.86	20.80	20.90	0	19.81	19.75	19.85	1
	1	12	20.82	20.76	20.86	0	19.77	19.71	19.81	1
	1	24	20.77	20.71	20.81	0	19.72	19.66	19.76	1
	12	0	19.86	19.80	19.90	1	18.81	18.75	18.85	2
	12	6	19.84	19.78	19.88	1	18.79	18.73	18.83	2
	12	13	19.82	19.76	19.86	1	18.77	18.71	18.81	2
	25	0	19.83	19.77	19.87	1	18.78	18.72	18.82	2

Band / BW	RB Size	RB Offset	QPSK			3GPP MPR (dB)	16QAM			3GPP MPR (dB)
			Low CH 20450	Mid CH 20525	High CH 20600		Low CH 20450	Mid CH 20525	High CH 20600	
			829.0 MHz	836.5 MHz	844.0 MHz		829.0 MHz	836.5 MHz	844.0 MHz	
EUT without Power Reduction (Ant-0 / Ant-1)										
5 / 10M	1	0	23.71	23.73	**23.78**	0	22.13	22.15	22.20	1
	1	24	23.67	23.69	23.74	0	22.09	22.11	22.16	1
	1	49	23.65	23.67	23.72	0	22.07	22.09	22.14	1
	25	0	22.75	22.77	22.82	1	21.17	21.19	21.24	2
	25	12	22.71	22.73	22.78	1	21.13	21.15	21.20	2
	25	25	22.74	22.76	22.81	1	21.16	21.18	21.23	2
	50	0	22.73	22.75	22.80	1	21.15	21.17	21.22	2
EUT with Power Reduction (Ant-1_Head Mode – Voice only (receiver-on))										
5 / 10M	1	0	20.91	20.85	**20.95**	0	19.86	19.80	19.90	1
	1	24	20.87	20.81	20.91	0	19.82	19.76	19.86	1
	1	49	20.82	20.76	20.86	0	19.77	19.71	19.81	1
	25	0	19.91	19.85	19.95	1	18.86	18.80	18.90	2
	25	12	19.89	19.83	19.93	1	18.84	18.78	18.88	2
	25	25	19.87	19.81	19.91	1	18.82	18.76	18.86	2
	50	0	19.88	19.82	19.92	1	18.83	18.77	18.87	2

Band / BW	RB Size	RB Offset	QPSK			3GPP MPR (dB)	16QAM			3GPP MPR (dB)
			Low CH 20775	Mid CH 21100	High CH 21425		Low CH 20775	Mid CH 21100	High CH 21425	
			2502.5 MHz	2535.0 MHz	2567.5 MHz		2502.5 MHz	2535.0 MHz	2567.5 MHz	
7 / 5M	1	0	22.26	22.28	22.37	0	21.18	21.20	21.29	1
	1	12	22.59	22.61	22.70	0	21.51	21.53	21.62	1
	1	24	22.56	22.58	22.67	0	21.48	21.50	21.59	1
	12	0	21.54	21.56	21.65	1	20.46	20.48	20.57	2
	12	6	21.65	21.67	21.76	1	20.57	20.59	20.68	2
	12	13	21.61	21.63	21.72	1	20.53	20.55	20.64	2
	25	0	21.59	21.61	21.70	1	20.51	20.53	20.62	2

Band / BW	RB Size	RB Offset	QPSK			3GPP MPR (dB)	16QAM			3GPP MPR (dB)
			Low CH 20800	Mid CH 21100	High CH 21400		Low CH 20800	Mid CH 21100	High CH 21400	
			2505.0 MHz	2535.0 MHz	2565.0 MHz		2505.0 MHz	2535.0 MHz	2565.0 MHz	
7 / 10M	1	0	22.33	22.35	22.44	0	21.25	21.27	21.36	1
	1	24	22.66	22.68	22.77	0	21.58	21.60	21.69	1
	1	49	22.63	22.65	22.74	0	21.55	21.57	21.66	1
	25	0	21.61	21.63	21.72	1	20.53	20.55	20.64	2
	25	12	21.72	21.74	21.83	1	20.64	20.66	20.75	2
	25	25	21.68	21.70	21.79	1	20.60	20.62	20.71	2
	50	0	21.66	21.68	21.77	1	20.58	20.60	20.69	2

Band / BW	RB Size	RB Offset	QPSK			3GPP MPR (dB)	16QAM			3GPP MPR (dB)
			Low CH 20825	Mid CH 21100	High CH 21375		Low CH 20825	Mid CH 21100	High CH 21375	
			2507.5 MHz	2535.0 MHz	2562.5 MHz		2507.5 MHz	2535.0 MHz	2562.5 MHz	
7 / 15M	1	0	22.41	22.43	22.52	0	21.33	21.35	21.44	1
	1	37	22.74	22.76	22.85	0	21.66	21.68	21.77	1
	1	74	22.71	22.73	22.82	0	21.63	21.65	21.74	1
	36	0	21.69	21.71	21.80	1	20.61	20.63	20.72	2
	36	19	21.80	21.82	21.91	1	20.72	20.74	20.83	2
	36	39	21.76	21.78	21.87	1	20.68	20.70	20.79	2
	75	0	21.74	21.76	21.85	1	20.66	20.68	20.77	2

Band / BW	RB Size	RB Offset	QPSK			3GPP MPR (dB)	16QAM			3GPP MPR (dB)
			Low CH 20850	Mid CH 21100	High CH 21350		Low CH 20850	Mid CH 21100	High CH 21350	
			2510.0 MHz	2535.0 MHz	2560.0 MHz		2510.0 MHz	2535.0 MHz	2560.0 MHz	
7 / 20M	1	0	22.46	22.48	22.57	0	21.38	21.40	21.49	1
	1	50	22.79	22.81	**22.90**	0	21.71	21.73	21.82	1
	1	99	22.76	22.78	22.87	0	21.68	21.70	21.79	1
	50	0	21.74	21.76	21.85	1	20.66	20.68	20.77	2
	50	25	21.85	21.87	21.96	1	20.77	20.79	20.88	2
	50	50	21.81	21.83	21.92	1	20.73	20.75	20.84	2
	100	0	21.79	21.81	21.90	1	20.71	20.73	20.82	2

Band / BW	RB Size	RB Offset	QPSK			3GPP MPR (dB)	16QAM			3GPP MPR (dB)
			Low CH 26697	Mid CH 26865	High CH 27033		Low CH 26697	Mid CH 26865	High CH 27033	
			814.7 MHz	831.5 MHz	848.3 MHz		814.7 MHz	831.5 MHz	848.3 MHz	
EUT without Power Reduction (Ant-0 / Ant-1)										
26 / 1.4M	1	0	23.15	23.20	23.08	0	22.08	22.13	22.01	1
	1	2	23.03	23.08	22.96	0	21.96	22.01	21.89	1
	1	5	22.99	23.04	22.92	0	21.92	21.97	21.85	1
	3	0	22.16	22.21	22.09	0	21.09	21.14	21.07	1
	3	1	22.13	22.18	22.06	0	21.06	21.11	21.05	1
	3	3	22.05	22.10	22.01	0	21.02	21.03	21.02	1
	6	0	22.10	22.15	22.03	1	21.03	21.08	20.96	2
EUT with Power Reduction (Ant-1_Head Mode – Voice only (receiver-on))										
26 / 1.4M	1	0	20.72	20.75	20.68	0	19.67	19.70	19.63	1
	1	2	20.64	20.67	20.60	0	19.59	19.62	19.55	1
	1	5	20.61	20.64	20.57	0	19.56	19.59	19.52	1
	3	0	19.66	19.69	19.62	0	18.61	18.64	18.57	1
	3	1	19.64	19.67	19.60	0	18.59	18.62	18.55	1
	3	3	19.62	19.65	19.58	0	18.57	18.60	18.53	1
	6	0	19.55	19.68	19.61	0	18.60	18.63	18.56	2

Band / BW	RB Size	RB Offset	QPSK			3GPP MPR (dB)	16QAM			3GPP MPR (dB)
			Low CH 26705	Mid CH 26865	High CH 27025		Low CH 26705	Mid CH 26865	High CH 27025	
			815.5 MHz	831.5 MHz	847.5 MHz		815.5 MHz	831.5 MHz	847.5 MHz	
EUT without Power Reduction (Ant-0 / Ant-1)										
26 / 3M	1	0	23.20	23.25	23.13	0	22.13	22.18	22.06	1
	1	7	23.08	23.13	23.01	0	22.01	22.06	21.94	1
	1	14	23.04	23.09	22.97	0	21.97	22.02	21.90	1
	8	0	22.21	22.26	22.14	1	21.14	21.19	21.07	2
	8	3	22.18	22.23	22.11	1	21.11	21.16	21.04	2
	8	7	22.10	22.15	22.03	1	21.03	21.08	20.96	2
	15	0	22.15	22.20	22.08	1	21.08	21.13	21.01	2
EUT with Power Reduction (Ant-1_ Head Mode – Voice only (receiver-on))										
26 / 3M	1	0	20.77	20.80	20.73	0	19.72	19.75	19.68	1
	1	7	20.69	20.72	20.65	0	19.64	19.67	19.60	1
	1	14	20.66	20.69	20.62	0	19.61	19.64	19.57	1
	8	0	19.71	19.74	19.67	1	18.66	18.69	18.62	2
	8	3	19.69	19.72	19.65	1	18.64	18.67	18.60	2
	8	7	19.67	19.70	19.63	1	18.62	18.65	18.58	2
	15	0	19.70	19.73	19.66	1	18.65	18.68	18.61	2

Band / BW	RB Size	RB Offset	QPSK			3GPP MPR (dB)	16QAM			3GPP MPR (dB)
			Low CH 26715	Mid CH 26865	High CH 27015		Low CH 26715	Mid CH 26865	High CH 27015	
			816.5 MHz	831.5 MHz	846.5 MHz		816.5 MHz	831.5 MHz	846.5 MHz	
EUT without Power Reduction (Ant-0 / Ant-1)										
26 / 5M	1	0	23.23	23.28	23.16	0	22.16	22.21	22.09	1
	1	12	23.11	23.16	23.04	0	22.04	22.09	21.97	1
	1	24	23.07	23.12	23.00	0	22.00	22.05	21.93	1
	12	0	22.24	22.29	22.17	1	21.17	21.22	21.10	2
	12	6	22.21	22.26	22.14	1	21.14	21.19	21.07	2
	12	13	22.13	22.18	22.06	1	21.06	21.11	20.99	2
	25	0	22.18	22.23	22.11	1	21.11	21.16	21.04	2
EUT with Power Reduction (Ant-1_ Head Mode – Voice only (receiver-on))										
26 / 5M	1	0	20.84	20.87	20.80	0	19.79	19.82	19.75	1
	1	12	20.76	20.79	20.72	0	19.71	19.74	19.67	1
	1	24	20.73	20.76	20.69	0	19.68	19.71	19.64	1
	12	0	19.78	19.81	19.74	1	18.73	18.76	18.69	2
	12	6	19.76	19.79	19.72	1	18.71	18.74	18.67	2
	12	13	19.74	19.77	19.70	1	18.69	18.72	18.65	2
	25	0	19.77	19.80	19.73	1	18.72	18.75	18.68	2

Band / BW	RB Size	RB Offset	QPSK			3GPP MPR (dB)	16QAM			3GPP MPR (dB)
			Low CH 26740	Mid CH 26865	High CH 26990		Low CH 26740	Mid CH 26865	High CH 26990	
			819.0 MHz	831.5 MHz	844.0 MHz		819.0 MHz	831.5 MHz	844.0 MHz	
EUT without Power Reduction (Ant-0 / Ant-1)										
26 / 10M	1	0	23.28	23.33	23.21	0	22.21	22.26	22.14	1
	1	24	23.16	23.21	23.09	0	22.09	22.14	22.02	1
	1	49	23.12	23.17	23.05	0	22.05	22.10	21.98	1
	25	0	22.29	22.34	22.22	1	21.22	21.27	21.15	2
	25	12	22.26	22.31	22.19	1	21.19	21.24	21.12	2
	25	25	22.18	22.23	22.11	1	21.11	21.16	21.04	2
	50	0	22.23	22.28	22.16	1	21.16	21.21	21.09	2
EUT with Power Reduction (Ant-1_ Head Mode – Voice only (receiver-on))										
26 / 10M	1	0	20.89	20.92	20.85	0	19.84	19.87	19.80	1
	1	24	20.81	20.84	20.77	0	19.76	19.79	19.72	1
	1	49	20.78	20.81	20.74	0	19.73	19.76	19.69	1
	25	0	19.83	19.86	19.79	1	18.78	18.81	18.74	2
	25	12	19.81	19.84	19.77	1	18.76	18.79	18.72	2
	25	25	19.79	19.82	19.75	1	18.74	18.77	18.70	2
	50	0	19.82	19.85	19.78	1	18.77	18.80	18.73	2

Band / BW	RB Size	RB Offset	QPSK			3GPP MPR (dB)	16QAM			3GPP MPR (dB)
			Low CH 26765	Mid CH 26865	High CH 26965		Low CH 26765	Mid CH 26865	High CH 26965	
			821.5 MHz	831.5 MHz	841.5 MHz		821.5 MHz	831.5 MHz	841.5 MHz	
EUT without Power Reduction (Ant-0 / Ant-1)										
26 / 15M	1	0	23.78	**23.83**	23.71	0	22.26	22.31	22.19	1
	1	37	23.66	23.71	23.59	0	22.14	22.19	22.07	1
	1	74	23.62	23.67	23.55	0	22.10	22.15	22.03	1
	36	0	22.79	22.84	22.72	1	21.27	21.32	21.20	2
	36	19	22.76	22.81	22.69	1	21.24	21.29	21.17	2
	36	39	22.68	22.73	22.61	1	21.16	21.21	21.09	2
	75	0	22.73	22.78	22.66	1	21.21	21.26	21.14	2
EUT with Power Reduction (Ant-1_ Head Mode – Voice only (receiver-on))										
26 / 15M	1	0	20.96	20.99	20.92	0	19.91	19.94	19.87	1
	1	37	20.88	20.91	20.84	0	19.83	19.86	19.79	1
	1	74	20.85	20.88	20.81	0	19.80	19.83	19.76	1
	36	0	19.90	19.93	19.86	1	18.85	18.88	18.81	2
	36	19	19.88	19.91	19.84	1	18.83	18.86	18.79	2
	36	39	19.86	19.89	19.82	1	18.81	18.84	18.77	2
	75	0	19.89	19.92	19.85	1	18.84	18.87	18.80	2

Band / BW	RB Size	RB Offset	QPSK			3GPP MPR (dB)	16QAM			3GPP MPR (dB)
			Low CH 40165	Mid CH 40690	High CH 41215		Low CH 40165	Mid CH 40690	High CH 41215	
			2547.5 MHz	2600 MHz	2652.5 MHz		2547.5 MHz	2600 MHz	2652.5 MHz	
41 / 5M	1	0	23.46	23.37	23.18	0	22.42	22.33	22.14	1
	1	12	23.67	23.58	23.39	0	22.63	22.54	22.35	1
	1	24	23.59	23.50	23.31	0	22.55	22.46	22.27	1
	12	0	22.49	22.40	22.21	1	21.45	21.36	21.17	2
	12	6	22.59	22.47	22.28	1	21.55	21.43	21.24	2
	12	13	22.56	22.50	22.31	1	21.52	21.46	21.27	2
	25	0	22.47	22.38	22.19	1	21.43	21.34	21.15	2

Band / BW	RB Size	RB Offset	QPSK			3GPP MPR (dB)	16QAM			3GPP MPR (dB)
			Low CH 40190	Mid CH 40690	High CH 41190		Low CH 40190	Mid CH 40690	High CH 41190	
			2550 MHz	2600 MHz	2650 MHz		2550 MHz	2600 MHz	2650 MHz	
41 / 10M	1	0	23.52	23.44	23.27	0	22.46	22.38	22.21	1
	1	24	23.73	23.65	23.48	0	22.67	22.59	22.42	1
	1	49	23.65	23.57	23.40	0	22.59	22.51	22.34	1
	25	0	22.55	22.47	22.30	1	21.49	21.41	21.24	2
	25	12	22.65	22.54	22.37	1	21.59	21.48	21.31	2
	25	25	22.62	22.57	22.40	1	21.56	21.51	21.34	2
	50	0	22.53	22.45	22.28	1	21.47	21.39	21.22	2

Band / BW	RB Size	RB Offset	QPSK			3GPP MPR (dB)	16QAM			3GPP MPR (dB)
			Low CH 40215	Mid CH 40690	High CH 41165		Low CH 40215	Mid CH 40690	High CH 41165	
			2552.5 MHz	2600 MHz	2647.5 MHz		2552.5 MHz	2600 MHz	2647.5 MHz	
41 / 15M	1	0	23.60	23.52	23.35	0	22.54	22.46	22.29	1
	1	37	23.81	23.73	23.56	0	22.75	22.67	22.50	1
	1	74	23.73	23.65	23.48	0	22.67	22.59	22.42	1
	36	0	22.63	22.55	22.38	1	21.57	21.49	21.32	2
	36	19	22.73	22.62	22.45	1	21.67	21.56	21.39	2
	36	39	22.70	22.65	22.48	1	21.63	21.59	21.42	2
	75	0	22.61	22.53	22.36	1	21.55	21.47	21.30	2

Band / BW	RB Size	RB Offset	QPSK			3GPP MPR (dB)	16QAM			3GPP MPR (dB)
			Low CH 40240	Mid CH 40690	High CH 41140		Low CH 40240	Mid CH 40690	High CH 41140	
			2555 MHz	2600 MHz	2645 MHz		2555 MHz	2600 MHz	2645 MHz	
41 / 20M	1	0	23.66	23.58	23.41	0	22.60	22.52	22.35	1
	1	50	**23.87**	23.79	23.62	0	22.81	22.73	22.56	1
	1	99	23.79	23.71	23.54	0	22.73	22.65	22.48	1
	50	0	22.69	22.61	22.44	1	21.63	21.55	21.38	2
	50	25	**22.79**	22.68	22.51	1	21.73	21.62	21.45	2
	50	50	22.76	22.71	22.54	1	21.70	21.65	21.48	2
	100	0	22.67	22.59	22.42	1	21.61	21.53	21.36	2

<WLAN 2.4G>

EUT without Power Reduction (Body / Hotspot Mode)					
Mode	**802.11b**				
Channel / Frequency (MHz)	**1 (2412)**	**6 (2437)**	**11 (2462)**	**12 (2467)**	**13 (2472)**
Average Power	**17.26**	17.17	17.09	17.24	17.21
EUT with Power Reduction (Head Mode – Voice only (receiver-on))					
Mode	**802.11b**				
Channel / Frequency (MHz)	**1 (2412)**	**6 (2437)**	**11 (2462)**	**12 (2467)**	**13 (2472)**
Average Power	10.35	10.38	10.31	10.21	10.20

<WLAN 5.2G>

EUT without Power Reduction (Body / Hotspot Mode)		
Mode	**802.11n (HT40)**	
Channel / Frequency (MHz)	**38 (5190)**	**46 (5230)**
Average Power	17.18	**17.26**

<WLAN 5.3G>

EUT without Power Reduction (Body Mode)		
Mode	**802.11n (HT40)**	
Channel / Frequency (MHz)	**54 (5270)**	**62 (5310)**
Average Power	17.28	**17.32**
EUT without Power Reduction (Head Mode – Voice only (receiver-on))		
Mode	**802.11n (HT40)**	
Channel / Frequency (MHz)	**54 (5270)**	**62 (5310)**
Average Power	**10.11**	**10.23**

<WLAN 5.6G>

EUT without Power Reduction (Body Mode)			
Mode	802.11n (HT40)		
Channel / Frequency (MHz)	102 (5510)	110 (5550)	134 (5670)
Average Power	**17.36**	17.31	17.27
EUT without Power Reduction (Head Mode – Voice only (receiver-on))			
Mode	802.11n (HT40)		
Channel / Frequency (MHz)	102 (5510)	110 (5550)	134 (5670)
Average Power	7.95	**7.98**	7.78

<WLAN 5.8G>

EUT without Power Reduction (Body / Hotspot Mode)		
Mode	802.11n (HT40)	
Channel / Frequency (MHz)	151 (5755)	159 (5795)
Average Power	17.13	**17.26**
EUT without Power Reduction (Head Mode – Voice only (receiver-on))		
Mode	802.11n (HT40)	
Channel / Frequency (MHz)	151 (5755)	159 (5795)
Average Power	8.78	**8.86**

<Bluetooth>

Mode	Bluetooth		
Channel / Frequency (MHz)	0 (2402)	39 (2441)	78 (2480)
Average Power	**10.26**	9.49	9.77

4.7 SAR Testing Results

4.7.1 SAR Test Reduction Considerations

<KDB 447498 D01, General RF Exposure Guidance>

Testing of other required channels within the operating mode of a frequency band is not required when the reported SAR for the mid-band or highest output power channel is:

(1) ≤ 0.8 W/kg or 2.0 W/kg, for 1-g or 10-g respectively, when the transmission band is ≤ 100 MHz

(2) ≤ 0.6 W/kg or 1.5 W/kg, for 1-g or 10-g respectively, when the transmission band is between 100 MHz and 200 MHz

(3) ≤ 0.4 W/kg or 1.0 W/kg, for 1-g or 10-g respectively, when the transmission band is ≥ 200 MHz

<KDB 941225 D01, 3G SAR Measurement Procedures>

The mode tested for SAR is referred to as the primary mode. The equivalent modes considered for SAR test reduction are denoted as secondary modes. Both primary and secondary modes must be in the same frequency band. When the maximum output power and tune-up tolerance specified for production units in a secondary mode is ≤ 1/4 dB higher than the primary mode or when the highest reported SAR of the primary mode is scaled by the ratio of specified maximum output power and tune-up tolerance of secondary to primary mode and the adjusted SAR is ≤ 1.2 W/kg, SAR measurement is not required for the secondary mode.

<KDB 941225 D05, SAR Evaluation Considerations for LTE Devices>

(1) QPSK with 1 RB and 50% RB allocation

Start with the largest channel bandwidth and measure SAR, using the RB offset and required test channel combination with the highest maximum output power among RB offsets at the upper edge, middle and lower edge of each required test channel. When the reported SAR is ≤ 0.8 W/kg, testing of the remaining RB offset configurations and required test channels is not required; otherwise, SAR is required for the remaining required test channels and only for the RB offset configuration with the highest output power for that channel. When the reported SAR of a required test channel is > 1.45 W/kg, SAR is required for all three RB offset configurations for that required test channel.

(2) QPSK with 100% RB allocation

SAR is not required when the highest maximum output power for 100% RB allocation is less than the highest maximum output power in 50% and 1 RB allocations and the highest reported SAR for 1 RB and 50% RB allocation are ≤ 0.8 W/kg. Otherwise, SAR is measured for the highest output power channel; and if the reported SAR is > 1.45 W/kg, the remaining required test channels must also be tested.

(3) Higher order modulations

SAR is required only when the highest maximum output power for the configuration in the higher order modulation is > 1/2 dB higher than the same configuration in QPSK or when the reported SAR for the QPSK configuration is > 1.45 W/kg.

(4) Other channel bandwidth

SAR is required when the highest maximum output power of the smaller channel bandwidth is > 1/2 dB higher than the equivalent channel configurations in the largest channel bandwidth configuration or the reported SAR of a configuration for the largest channel bandwidth is > 1.45 W/kg.

<KDB 248227 D01, SAR Guidance for Wi-Fi Transmitters>

(1) For handsets operating next to ear, hotspot mode or mini-tablet configurations, the initial test position procedures were applied. The test position with the highest extrapolated peak SAR will be used as the initial test position. When the reported SAR of initial test position is <= 0.4 W/kg, SAR testing for remaining test positions is not required. Otherwise, SAR is evaluated at the subsequent highest peak SAR positions until the reported SAR result is <= 0.8 W/kg or all test positions are measured.

(2) For WLAN 2.4 GHz, the highest measured maximum output power channel for DSSS was selected for SAR measurement. When the reported SAR is <= 0.8 W/kg, no further SAR testing is required. Otherwise, SAR is evaluated at the next highest measured output power channel. When any reported SAR is > 1.2 W/kg, SAR is required for the third channel. For OFDM modes (802.11g/n), SAR is not required when the highest reported SAR for DSSS is adjusted by the ratio of OFDM to DSSS specified maximum output power and it is <= 1.2 W/kg.

(3) For WLAN 5 GHz, the initial test configuration was selected according to the transmission mode with the highest maximum output power. When the reported SAR of initial test configuration is > 0.8 W/kg, SAR is required for the subsequent highest measured output power channel until the reported SAR result is <= 1.2 W/kg or all required channels are measured. For other transmission modes, SAR is not required when the highest reported SAR for initial test configuration is adjusted by the ratio of subsequent test configuration to initial test configuration specified maximum output power and it is <= 1.2 W/kg.

<KDB 648474 D04, SAR Guidance for Dynamic Antenna Tuning>

This device supports dynamic antenna tuning for WCDMA II / V and LTE 2 / 5.

According to KDB 648474 D04 and FCC guidance in October 2015 TCBC workshop, the following test procedure was used to demonstrate that SAR results represented the appropriate SAR test conditions. For bands with dynamic tuning implemented, SAR was measured according to the required FCC SAR test procedures with the dynamic tuner active to allow the device to automatically tune to the antenna state for the respective RF exposure test configurations. The tuning state determined by the auto-tune was verified before and after SAR measurement for the highest reported SAR configuration for each band and testing configuration to confirm the antenna state of auto-tune is the same. Additional single point SAR time-sweep measurements were evaluated for other tuner states to determine that the other tuner configurations would result in equivalent or lower SAR values. The additional tuner hardware has no influence to the antenna characteristics, other than impedance matching.

To evaluate all of the tuner states, the 96 tuner states were divided among the aggregate band, mode and exposure combinations so that each combination was evaluated for at least 24 tuner states and also so that at least 3 single point SAR measurements were made for every available tuner state. Single point time-sweep measurements were performed at the peak SAR location determined by the zoom scan of the configuration with the highest reported SAR for each combination. The tuner state was able to be established remotely so that the DUT was not moved and the probe remained stationary at the same position throughout the entire series of single point measurements for each combination.

The operational description contains more information about the design and implementation of the dynamic antenna tuning.

Supplemental Data for Head SAR

Band	WCDMA II	Band	WCDMA V	Band	LTE 2	Band	LTE 5
Mode	RMC12.2K	Mode	RMC12.2K	Mode	QPSK,20M 1RB, OS0	Mode	QPSK,10M 1RB, OS0
Position	Left Cheek	Position	Right Cheek	Position	Left Cheek	Position	Right Cheek
Channel	9538	Channel	4182	Channel	18900	Channel	20600
Measured 1g SAR (W/kg)	0.085	Measured 1g SAR (W/kg)	0.114	Measured 1g SAR (W/kg)	0.096	Measured 1g SAR (W/kg)	0.158
Average Value of Time Sweep (W/kg)		Average Value of Time Sweep (W/kg)		Average Value of Time Sweep (W/kg)		Average Value of Time Sweep (W/kg)	
Auto-tune	0.106	Auto-tune	0.162	Auto-tune	0.172	Auto-tune	0.178
Default (Open-loop)	0.101	Default (Open-loop)	0.157	Default (Open-loop)	0.166	Default (Open-loop)	0.170
State 0	0.098	State 0	0.144	State 0	0.160	State 0	0.170
State 5	0.097	State 5	0.142	State 5	0.162	State 5	0.169
State 11	0.098	State 11	0.145	State 11	0.165	State 11	0.160
State 12	0.100	State 12	0.135	State 12	0.166	State 12	0.163
State 17	0.101	State 17	0.132	State 17	0.165	State 17	0.160
State 23	0.103	State 23	0.133	State 23	0.163	State 23	0.169
State 24	0.097	State 24	0.152	State 24	0.162	State 24	0.171
State 29	0.101	State 29	0.150	State 29	0.164	State 29	0.173
State 35	0.097	State 35	0.153	State 35	0.166	State 35	0.175
State 36	0.095	State 36	0.154	State 36	0.170	State 36	0.173
State 41	0.098	State 41	0.155	State 41	0.171	State 41	0.172
State 47	0.101	State 47	0.160	State 47	0.169	State 47	0.171
State 48	0.095	State 48	0.157	State 48	0.167	State 48	0.174
State 53	0.091	State 53	0.154	State 53	0.165	State 53	0.170
State 59	0.098	State 59	0.152	State 59	0.164	State 59	0.160
State 60	0.096	State 60	0.134	State 60	0.163	State 60	0.165
State 65	0.097	State 65	0.130	State 65	0.166	State 65	0.163
State 71	0.104	State 71	0.131	State 71	0.168	State 71	0.175
State 72	0.098	State 72	0.135	State 72	0.171	State 72	0.174
State 77	0.101	State 77	0.139	State 77	0.170	State 77	0.169
State 83	0.099	State 83	0.138	State 83	0.165	State 83	0.172
State 84	0.102	State 84	0.144	State 84	0.169	State 84	0.177
State 89	0.099	State 89	0.145	State 89	0.172	State 89	0.175
State 95	0.100	State 95	0.149	State 95	0.168	State 95	0.168

Supplemental Data for Body SAR

Band	WCDMA II	Band	WCDMA V	Band	LTE 2	Band	LTE 5
Mode	RMC12.2K	Mode	RMC12.2K	Mode	QPSK,10M 1RB, OS0	Mode	QPSK,10M 1RB, OS0
Position	Bottom Side	Position	Front Face	Position	Bottom Side	Position	Front Face
Channel	9400	Channel	4182	Channel	19100	Channel	20600
Measured 1g SAR (W/kg)	1.07	Measured 1g SAR (W/kg)	0.289	Measured 1g SAR (W/kg)	1.04	Measured 1g SAR (W/kg)	0.394
Average Value of Time Sweep (W/kg)		Average Value of Time Sweep (W/kg)		Average Value of Time Sweep (W/kg)		Average Value of Time Sweep (W/kg)	
Auto-tune	2.20	Auto-tune	0.547	Auto-tune	1.729	Auto-tune	0.560
Default (Open-loop)	1.96	Default (Open-loop)	0.534	Default (Open-loop)	1.677	Default (Open-loop)	0.538
State 0	2.19	State 0	0.539	State 0	1.673	State 0	0.510
State 5	2.03	State 5	0.540	State 5	1.666	State 5	0.492
State 11	2.05	State 11	0.537	State 11	1.694	State 11	0.441
State 12	2.02	State 12	0.540	State 12	1.689	State 12	0.428
State 17	2.02	State 17	0.541	State 17	1.691	State 17	0.430
State 23	2.00	State 23	0.533	State 23	1.545	State 23	0.468
State 24	1.95	State 24	0.538	State 24	1.681	State 24	0.479
State 29	1.99	State 29	0.535	State 29	1.688	State 29	0.501
State 35	2.00	State 35	0.537	State 35	1.684	State 35	0.512
State 36	2.14	State 36	0.536	State 36	1.654	State 36	0.524
State 41	1.98	State 41	0.535	State 41	1.666	State 41	0.528
State 47	1.98	State 47	0.534	State 47	1.678	State 47	0.537
State 48	1.99	State 48	0.534	State 48	1.677	State 48	0.537
State 53	1.99	State 53	0.533	State 53	1.717	State 53	0.544
State 59	2.00	State 59	0.540	State 59	1.727	State 59	0.546
State 60	2.12	State 60	0.541	State 60	1.639	State 60	0.548
State 65	2.11	State 65	0.538	State 65	1.644	State 65	0.537
State 71	2.09	State 71	0.533	State 71	1.648	State 71	0.524
State 72	1.96	State 72	0.537	State 72	1.563	State 72	0.532
State 77	1.95	State 77	0.534	State 77	1.561	State 77	0.537
State 83	2.00	State 83	0.542	State 83	1.640	State 83	0.557
State 84	2.01	State 84	0.544	State 84	1.707	State 84	0.550
State 89	1.99	State 89	0.541	State 89	1.711	State 89	0.546
State 95	1.89	State 95	0.539	State 95	1.714	State 95	0.555

4.7.2 SAR Results for Head Exposure Condition

Plot No.	Band	Mode	Test Position	Ch.	Tx Antenna	Power Reduction	Max. Tune-up Power (dBm)	Measured Conducted Power (dBm)	Scaling Factor	Power Drift (dB)	Measured SAR-1g (W/kg)	Scaled SAR-1g (W/kg)
	GSM850	GPRS10	Right Cheek	189	0	w/o	32.0	31.98	1.00	-0.08	0.299	0.30
	GSM850	GPRS10	Right Tilted	189	0	w/o	32.0	31.98	1.00	0.08	0.092	0.09
	GSM850	GPRS10	Left Cheek	189	0	w/o	32.0	31.98	1.00	-0.11	0.176	0.18
	GSM850	GPRS10	Left Tilted	189	0	w/o	32.0	31.98	1.00	-0.03	0.155	0.16
01	GSM850	GPRS10	Right Cheek	189	1	w/	28.0	27.69	1.07	-0.03	1.05	**1.13**
	GSM850	GPRS10	Right Tilted	189	1	w/	28.0	27.69	1.07	-0.07	0.878	0.94
	GSM850	GPRS10	Left Cheek	189	1	w/	28.0	27.69	1.07	0	0.968	1.04
	GSM850	GPRS10	Left Tilted	189	1	w/	28.0	27.69	1.07	0.06	0.796	0.85
	GSM850	GPRS10	Right Cheek	128	1	w/	28.0	27.67	1.08	-0.14	1.03	1.11
	GSM850	GPRS10	Right Cheek	251	1	w/	28.0	27.28	1.18	-0.12	0.951	1.12
	GSM850	GPRS10	Right Tilted	128	1	w/	28.0	27.67	1.08	0.15	0.852	0.92
	GSM850	GPRS10	Right Tilted	251	1	w/	28.0	27.28	1.18	0.11	0.869	1.03
	GSM850	GPRS10	Left Cheek	128	1	w/	28.0	27.67	1.08	-0.19	0.926	1.00
	GSM850	GPRS10	Left Cheek	251	1	w/	28.0	27.28	1.18	-0.15	0.951	1.12
	GSM850	GPRS10	Left Tilted	128	1	w/	28.0	27.67	1.08	-0.14	0.776	0.84
	GSM850	GPRS10	Left Tilted	251	1	w/	28.0	27.28	1.18	0.19	0.773	0.91
	GSM850	GPRS10	Right Cheek	189	1	w/	28.0	27.69	1.07	-0.03	1.03	1.11
	GSM1900	GPRS10	Right Cheek	512	0	w/o	30.0	29.79	1.05	0.046	0.046	0.05
	GSM1900	GPRS10	Right Tilted	512	0	w/o	30.0	29.79	1.05	0.033	0.033	0.03
	GSM1900	GPRS10	Left Cheek	512	0	w/o	30.0	29.79	1.05	0.066	0.066	0.07
	GSM1900	GPRS10	Left Tilted	512	0	w/o	30.0	29.79	1.05	0.028	0.028	0.03
02	GSM1900	GPRS10	Right Cheek	512	1	w/	27.0	26.27	1.18	0.12	0.818	**0.97**
	GSM1900	GPRS10	Right Tilted	512	1	w/	27.0	26.27	1.18	0.02	0.732	0.87
	GSM1900	GPRS10	Left Cheek	512	1	w/	27.0	26.27	1.18	0.08	0.703	0.83
	GSM1900	GPRS10	Left Tilted	512	1	w/	27.0	26.27	1.18	-0.1	0.666	0.79
	GSM1900	GPRS10	Right Cheek	661	1	w/	27.0	26.25	1.19	-0.16	0.802	0.95
	GSM1900	GPRS10	Right Cheek	810	1	w/	27.0	26.23	1.19	0.01	0.814	0.97
	GSM1900	GPRS10	Right Tilted	661	1	w/	27.0	26.25	1.19	0.01	0.723	0.86
	GSM1900	GPRS10	Right Tilted	810	1	w/	27.0	26.23	1.19	-0.01	0.715	0.85
	GSM1900	GPRS10	Left Cheek	661	1	w/	27.0	26.25	1.19	-0.19	0.678	0.81
	GSM1900	GPRS10	Left Cheek	810	1	w/	27.0	26.23	1.19	0.03	0.695	0.83
	GSM1900	GPRS10	Right Cheek	512	1	w/	27.0	26.27	1.18	0.12	0.808	0.96
	WCDMA II	RMC12.2K	Right Cheek	9538	0	w/o	25.0	24.83	1.04	-0.01	0.06	0.06
	WCDMA II	RMC12.2K	Right Tilted	9538	0	w/o	25.0	24.83	1.04	0.15	0.043	0.04
	WCDMA II	RMC12.2K	Left Cheek	9538	0	w/o	25.0	24.83	1.04	-0.12	0.085	0.09
	WCDMA II	RMC12.2K	Left Tilted	9538	0	w/o	25.0	24.83	1.04	-0.11	0.03	0.03
03	WCDMA II	RMC12.2K	Right Cheek	9538	1	w/	23.0	22.99	1.00	-0.01	1.09	**1.09**
	WCDMA II	RMC12.2K	Right Tilted	9538	1	w/	23.0	22.99	1.00	-0.05	1.01	1.01
	WCDMA II	RMC12.2K	Left Cheek	9538	1	w/	23.0	22.99	1.00	0.16	1	1.00
	WCDMA II	RMC12.2K	Left Tilted	9538	1	w/	23.0	22.99	1.00	-0.18	0.9	0.90
	WCDMA II	RMC12.2K	Right Cheek	9262	1	w/	23.0	22.43	1.14	-0.18	0.943	1.08
	WCDMA II	RMC12.2K	Right Cheek	9400	1	w/	23.0	22.61	1.09	0.12	0.981	1.07
	WCDMA II	RMC12.2K	Right Tilted	9262	1	w/	23.0	22.43	1.14	0.13	0.843	0.96
	WCDMA II	RMC12.2K	Right Tilted	9400	1	w/	23.0	22.61	1.09	0.01	0.991	1.08
	WCDMA II	RMC12.2K	Left Cheek	9262	1	w/	23.0	22.43	1.14	-0.03	0.886	1.01
	WCDMA II	RMC12.2K	Left Cheek	9400	1	w/	23.0	22.61	1.09	-0.01	0.913	1.00
	WCDMA II	RMC12.2K	Left Tilted	9262	1	w/	23.0	22.43	1.14	0.02	0.891	1.02
	WCDMA II	RMC12.2K	Left Tilted	9400	1	w/	23.0	22.61	1.09	0.03	0.917	1.00
	WCDMA II	RMC12.2K	Right Cheek	9538	1	w/	23.0	22.99	1.00	-0.01	1.07	1.07

Plot No.	Band	Mode	Test Position	Ch.	Tx Antenna	Power Reduction	Max. Tune-up Power (dBm)	Measured Conducted Power (dBm)	Scaling Factor	Power Drift (dB)	Measured SAR-1g (W/kg)	Scaled SAR-1g (W/kg)
	WCDMA V	RMC12.2K	Right Cheek	4182	0	w/o	24.0	23.96	1.01	-0.01	0.114	0.12
	WCDMA V	RMC12.2K	Right Tilted	4182	0	w/o	24.0	23.96	1.01	0.08	0.058	0.06
	WCDMA V	RMC12.2K	Left Cheek	4182	0	w/o	24.0	23.96	1.01	-0.01	0.071	0.07
	WCDMA V	RMC12.2K	Left Tilted	4182	0	w/o	24.0	23.96	1.01	-0.08	0.041	0.04
04	WCDMA V	RMC12.2K	Right Cheek	4182	1	w/	21.0	20.71	1.07	0.06	0.943	**1.01**
	WCDMA V	RMC12.2K	Right Tilted	4182	1	w/	21.0	20.71	1.07	-0.05	0.815	0.87
	WCDMA V	RMC12.2K	Left Cheek	4182	1	w/	21.0	20.71	1.07	0.09	0.766	0.82
	WCDMA V	RMC12.2K	Left Tilted	4182	1	w/	21.0	20.71	1.07	-0.08	0.651	0.70
	WCDMA V	RMC12.2K	Right Cheek	4132	1	w/	21.0	20.68	1.08	0.18	0.894	0.96
	WCDMA V	RMC12.2K	Right Cheek	4233	1	w/	21.0	20.65	1.08	-0.02	0.903	0.98
	WCDMA V	RMC12.2K	Right Tilted	4132	1	w/	21.0	20.68	1.08	0.18	0.784	0.84
	WCDMA V	RMC12.2K	Right Tilted	4233	1	w/	21.0	20.65	1.08	0.09	0.775	0.84
	WCDMA V	RMC12.2K	Left Cheek	4132	1	w/	21.0	20.68	1.08	0.05	0.73	0.79
	WCDMA V	RMC12.2K	Left Cheek	4233	1	w/	21.0	20.65	1.08	0.13	0.748	0.81
	WCDMA V	RMC12.2K	Right Cheek	4182	1	w/	21.0	20.71	1.07	0.06	0.938	1.00

Plot No.	Band	Mode	Test Position	Ch.	Tx Antenna	Power Reduction	RB#	RB Offset	Max. Tune-up Power (dBm)	Measured Conducted Power (dBm)	Scaling Factor	Power Drift (dB)	Measured SAR-1g (W/kg)	Scaled SAR-1g (W/kg)
	LTE 2	QPSK20M	Right Cheek	18900	0	w/o	1	0	24.0	23.99	1.00	0.01	0.074	0.07
	LTE 2	QPSK20M	Right Tilted	18900	0	w/o	1	0	24.0	23.99	1.00	0.15	0.055	0.06
	LTE 2	QPSK20M	Left Cheek	18900	0	w/o	1	0	24.0	23.99	1.00	-0.12	0.096	0.10
	LTE 2	QPSK20M	Left Tilted	18900	0	w/o	1	0	24.0	23.99	1.00	0	0.001	0.00
	LTE 2	QPSK20M	Right Cheek	18900	0	w/o	50	0	23.0	22.97	1.01	-0.05	0.066	0.07
	LTE 2	QPSK20M	Right Tilted	18900	0	w/o	50	0	23.0	22.97	1.01	0.07	0.053	0.05
	LTE 2	QPSK20M	Left Cheek	18900	0	w/o	50	0	23.0	22.97	1.01	0.08	0.086	0.09
	LTE 2	QPSK20M	Left Tilted	18900	0	w/o	50	0	23.0	22.97	1.01	0	0.001	0.00
	LTE 2	QPSK20M	Right Cheek	18900	1	w/	1	0	22.0	21.75	1.06	0.08	0.747	0.79
	LTE 2	QPSK20M	Right Tilted	18900	1	w/	1	0	22.0	21.75	1.06	-0.15	0.719	0.76
	LTE 2	QPSK20M	Left Cheek	18900	1	w/	1	0	22.0	21.75	1.06	0.17	0.792	0.84
	LTE 2	QPSK20M	Left Tilted	18900	1	w/	1	0	22.0	21.75	1.06	-0.1	0.747	0.79
	LTE 2	QPSK20M	Right Cheek	18900	1	w/	50	0	21.0	20.69	1.07	0.14	0.581	0.62
	LTE 2	QPSK20M	Right Tilted	18900	1	w/	50	0	21.0	20.69	1.07	0.06	0.556	0.60
	LTE 2	QPSK20M	Left Cheek	18900	1	w/	50	0	21.0	20.69	1.07	0.03	0.619	0.66
	LTE 2	QPSK20M	Left Tilted	18900	1	w/	50	0	21.0	20.69	1.07	-0.18	0.591	0.63
	LTE 2	QPSK20M	Left Cheek	18700	1	w/	1	0	22.0	21.53	1.11	-0.05	0.808	0.90
05	LTE 2	QPSK20M	Left Cheek	19100	1	w/	1	0	22.0	21.73	1.06	-0.17	0.842	**0.90**
	LTE 2	QPSK20M	Left Cheek	18900	1	w/	100	0	21.0	20.63	1.09	0.03	0.724	0.79
	LTE 2	QPSK20M	Left Cheek	19100	1	w/	1	0	22.0	21.73	1.06	-0.13	0.838	0.89

Note: The "< 0.001" means there is no SAR value or the SAR is too low to be measured.

Plot No.	Band	Mode	Test Position	Ch.	Tx Antenna	Power Reduction	RB#	RB Offset	Max. Tune-up Power (dBm)	Measured Conducted Power (dBm)	Scaling Factor	Power Drift (dB)	Measured SAR-1g (W/kg)	Scaled SAR-1g (W/kg)
	LTE 5	QPSK10M	Right Cheek	20600	0	w/o	1	0	24.0	23.78	1.05	0.01	0.158	0.17
	LTE 5	QPSK10M	Right Tilted	20600	0	w/o	1	0	24.0	23.78	1.05	0.08	0.081	0.09
	LTE 5	QPSK10M	Left Cheek	20600	0	w/o	1	0	24.0	23.78	1.05	-0.05	0.095	0.10
	LTE 5	QPSK10M	Left Tilted	20600	0	w/o	1	0	24.0	23.78	1.05	-0.18	0.075	0.08
	LTE 5	QPSK10M	Right Cheek	20600	0	w/o	25	0	23.0	22.82	1.04	-0.11	0.133	0.14
	LTE 5	QPSK10M	Right Tilted	20600	0	w/o	25	0	23.0	22.82	1.04	-0.05	0.065	0.07
	LTE 5	QPSK10M	Left Cheek	20600	0	w/o	25	0	23.0	22.82	1.04	0.07	0.077	0.08
	LTE 5	QPSK10M	Left Tilted	20600	0	w/o	25	0	23.0	22.82	1.04	0.08	0.061	0.06
06	LTE 5	QPSK10M	Right Cheek	20600	1	w/	1	0	21.0	20.95	1.01	0.02	1.05	**1.06**
	LTE 5	QPSK10M	Right Tilted	20600	1	w/	1	0	21.0	20.95	1.01	0.17	0.906	0.92
	LTE 5	QPSK10M	Left Cheek	20600	1	w/	1	0	21.0	20.95	1.01	-0.08	0.872	0.88
	LTE 5	QPSK10M	Left Tilted	20600	1	w/	1	0	21.0	20.95	1.01	0.09	0.732	0.74
	LTE 5	QPSK10M	Right Cheek	20600	1	w/	25	0	20.0	19.95	1.01	0.07	0.828	0.84
	LTE 5	QPSK10M	Right Tilted	20600	1	w/	25	0	20.0	19.95	1.01	-0.17	0.713	0.72
	LTE 5	QPSK10M	Left Cheek	20600	1	w/	25	0	20.0	19.95	1.01	0.11	0.684	0.69
	LTE 5	QPSK10M	Left Tilted	20600	1	w/	25	0	20.0	19.95	1.01	0.16	0.583	0.59
	LTE 5	QPSK10M	Right Cheek	20450	1	w/	1	0	21.0	20.91	1.02	-0.16	0.92	0.94
	LTE 5	QPSK10M	Right Cheek	20525	1	w/	1	0	21.0	20.85	1.04	-0.02	0.989	1.02
	LTE 5	QPSK10M	Right Tilted	20450	1	w/	1	0	21.0	20.91	1.02	-0.08	0.809	0.83
	LTE 5	QPSK10M	Right Tilted	20525	1	w/	1	0	21.0	20.85	1.04	-0.1	0.901	0.93
	LTE 5	QPSK10M	Left Cheek	20450	1	w/	1	0	21.0	20.91	1.02	-0.02	0.766	0.78
	LTE 5	QPSK10M	Left Cheek	20525	1	w/	1	0	21.0	20.85	1.04	-0.04	0.881	0.91
	LTE 5	QPSK10M	Right Cheek	20450	1	w/	25	0	20.0	19.91	1.02	0.15	0.751	0.77
	LTE 5	QPSK10M	Right Cheek	20525	1	w/	25	0	20.0	19.85	1.04	0.1	0.862	0.89
	LTE 5	QPSK10M	Right Cheek	20600	1	w/	50	0	20.0	19.92	1.02	-0.12	0.824	0.84
	LTE 5	QPSK10M	Right Tilted	20600	1	w/	50	0	20.0	19.82	1.04	0.17	0.785	0.82
	LTE 5	QPSK10M	Left Cheek	20600	1	w/	50	0	20.0	19.92	1.02	0.09	0.636	0.65
	LTE 5	QPSK10M	Right Cheek	20600	1	w/	1	0	21.0	20.95	1.01	0.02	1.02	1.03
	LTE 7	QPSK20M	Right Cheek	21350	0	w/o	1	50	23.0	22.90	1.02	-0.01	0.069	0.07
	LTE 7	QPSK20M	Right Tilted	21350	0	w/o	1	50	23.0	22.90	1.02	-0.11	0.052	0.05
07	LTE 7	QPSK20M	Left Cheek	21350	0	w/o	1	50	23.0	22.90	1.02	-0.02	0.122	**0.12**
	LTE 7	QPSK20M	Left Tilted	21350	0	w/o	1	50	23.0	22.90	1.02	0	0.001	0.00
	LTE 7	QPSK20M	Right Cheek	21350	0	w/o	50	25	22.0	21.96	1.01	0.16	0.057	0.06
	LTE 7	QPSK20M	Right Tilted	21350	0	w/o	50	25	22.0	21.96	1.01	0.17	0.046	0.05
	LTE 7	QPSK20M	Left Cheek	21350	0	w/o	50	25	22.0	21.96	1.01	-0.15	0.095	0.10
	LTE 7	QPSK20M	Left Tilted	21350	0	w/o	50	25	22.0	21.96	1.01	0	0.001	0.00

Note: The "< 0.001" means there is no SAR value or the SAR is too low to be measured.

Plot No.	Band	Mode	Test Position	Ch.	Tx Antenna	Power Reduction	RB#	RB Offset	Max. Tune-up Power (dBm)	Measured Conducted Power (dBm)	Scaling Factor	Power Drift (dB)	Measured SAR-1g (W/kg)	Scaled SAR-1g (W/kg)
	LTE 26	QPSK15M	Right Cheek	26865	0	w/o	1	0	24.0	23.83	1.04	-0.01	0.15	0.16
	LTE 26	QPSK15M	Right Tilted	26865	0	w/o	1	0	24.0	23.83	1.04	0.08	0.087	0.09
	LTE 26	QPSK15M	Left Cheek	26865	0	w/o	1	0	24.0	23.83	1.04	-0.01	0.128	0.13
	LTE 26	QPSK15M	Left Tilted	26865	0	w/o	1	0	24.0	23.83	1.04	-0.15	0.125	0.13
	LTE 26	QPSK15M	Right Cheek	26865	0	w/o	36	0	23.0	22.84	1.04	-0.11	0.107	0.11
	LTE 26	QPSK15M	Right Tilted	26865	0	w/o	36	0	23.0	22.84	1.04	-0.11	0.097	0.10
	LTE 26	QPSK15M	Left Cheek	26865	0	w/o	36	0	23.0	22.84	1.04	-0.15	0.095	0.10
	LTE 26	QPSK15M	Left Tilted	26865	0	w/o	36	0	23.0	22.84	1.04	-0.11	0.065	0.07
	LTE 26	QPSK15M	Right Cheek	26865	1	w/	1	0	21.0	20.99	1.00	0.05	1.04	1.04
	LTE 26	QPSK15M	Right Tilted	26865	1	w/	1	0	21.0	20.99	1.00	-0.11	0.914	0.92
	LTE 26	QPSK15M	Left Cheek	26865	1	w/	1	0	21.0	20.99	1.00	0.02	0.843	0.84
	LTE 26	QPSK15M	Left Tilted	26865	1	w/	1	0	21.0	20.99	1.00	-0.14	0.712	0.71
	LTE 26	QPSK15M	Right Cheek	26865	1	w/	36	0	20.0	19.93	1.02	-0.03	0.863	0.88
	LTE 26	QPSK15M	Right Tilted	26865	1	w/	36	0	20.0	19.93	1.02	0	0.732	0.74
	LTE 26	QPSK15M	Left Cheek	26865	1	w/	36	0	20.0	19.93	1.02	0	0.692	0.70
	LTE 26	QPSK15M	Left Tilted	26865	1	w/	36	0	20.0	19.93	1.02	0.06	0.581	0.59
	LTE 26	QPSK15M	Right Cheek	26765	1	w/	1	0	21.0	20.96	1.01	-0.07	1.02	1.03
08	LTE 26	QPSK15M	Right Cheek	26965	1	w/	1	0	21.0	20.92	1.02	0.03	1.05	**1.07**
	LTE 26	QPSK15M	Right Tilted	26765	1	w/	1	0	21.0	20.96	1.01	-0.06	0.914	0.92
	LTE 26	QPSK15M	Right Tilted	26965	1	w/	1	0	21.0	20.92	1.02	0.14	0.929	0.95
	LTE 26	QPSK15M	Left Cheek	26765	1	w/	1	0	21.0	20.96	1.01	-0.03	0.793	0.80
	LTE 26	QPSK15M	Left Cheek	26965	1	w/	1	0	21.0	20.92	1.02	0.08	0.894	0.91
	LTE 26	QPSK15M	Right Cheek	26765	1	w/	36	0	20.0	19.90	1.02	0.05	0.843	0.86
	LTE 26	QPSK15M	Right Cheek	26965	1	w/	36	0	20.0	19.86	1.03	0.03	0.822	0.85
	LTE 26	QPSK15M	Right Cheek	26865	1	w/	75	0	20.0	19.92	1.02	-0.18	0.828	0.84
	LTE 26	QPSK15M	Right Tilted	26865	1	w/	75	0	20.0	19.92	1.02	-0.16	0.717	0.73
	LTE 26	QPSK15M	Left Cheek	26865	1	w/	75	0	20.0	19.92	1.02	-0.13	0.697	0.71
	LTE 26	QPSK15M	Right Cheek	26965	1	w/	1	0	21.0	20.92	1.02	0.03	1.03	1.05
09	LTE 41	QPSK20M	Right Cheek	40240	0	w/o	1	50	24.0	23.87	1.03	0.08	0.046	**0.05**
	LTE 41	QPSK20M	Right Tilted	40240	0	w/o	1	50	24.0	23.87	1.03	0	0.001	0.00
	LTE 41	QPSK20M	Left Cheek	40240	0	w/o	1	50	24.0	23.87	1.03	0.03	0.045	0.05
	LTE 41	QPSK20M	Left Tilted	40240	0	w/o	1	50	24.0	23.87	1.03	0	0.001	0.00
	LTE 41	QPSK20M	Right Cheek	40240	0	w/o	50	25	23.0	22.79	1.05	0.04	0.033	0.03
	LTE 41	QPSK20M	Right Tilted	40240	0	w/o	50	25	23.0	22.79	1.05	0	0.001	0.00
	LTE 41	QPSK20M	Left Cheek	40240	0	w/o	50	25	23.0	22.79	1.05	-0.06	0.038	0.04
	LTE 41	QPSK20M	Left Tilted	40240	0	w/o	50	25	23.0	22.79	1.05	0	0.001	0.00

Note: The "< 0.001" means there is no SAR value or the SAR is too low to be measured.

Plot No.	Band	Mode	Test Position	Ch.	Power Reduction	Max. Tune-up Power (dBm)	Measured Conducted Power (dBm)	Scaling Factor	Power Drift (dB)	Measured SAR-1g (W/kg)	Scaled SAR-1g (W/kg)
10	2.4G WLAN	802.11b	Right Cheek	6	w/	10.5	10.38	1.03	0.11	0.321	**0.33**
	2.4G WLAN	802.11b	Right Tilted	6	w/	10.5	10.38	1.03	0.13	0.258	0.27
	2.4G WLAN	802.11b	Left Cheek	6	w/	10.5	10.38	1.03	0.01	0.106	0.11
	2.4G WLAN	802.11b	Left Tilted	6	w/	10.5	10.38	1.03	-0.05	0.113	0.12
11	5.3G WLAN	802.11n HT40	Right Cheek	62	w/	10.5	10.23	1.06	-0.18	0.429	**0.46**
	5.3G WLAN	802.11n HT40	Right Tilted	62	w/	10.5	10.23	1.06	0.13	0.373	0.40
	5.3G WLAN	802.11n HT40	Left Cheek	62	w/	10.5	10.23	1.06	0.03	0.292	0.31
	5.3G WLAN	802.11n HT40	Left Tilted	62	w/	10.5	10.23	1.06	0.05	0.323	0.34
12	5.6G WLAN	802.11n HT40	Right Cheek	110	w/	8.0	7.98	1.00	-0.16	0.457	**0.46**
	5.6G WLAN	802.11n HT40	Right Tilted	110	w/	8.0	7.98	1.00	-0.16	0.413	0.41
	5.6G WLAN	802.11n HT40	Left Cheek	110	w/	8.0	7.98	1.00	-0.16	0.237	0.24
	5.6G WLAN	802.11n HT40	Left Tilted	110	w/	8.0	7.98	1.00	-0.16	0.332	0.33
13	5.8G WLAN	802.11n HT40	Right Cheek	159	w/	9.0	8.86	1.03	-0.15	0.383	**0.40**
	5.8G WLAN	802.11n HT40	Right Tilted	159	w/	9.0	8.86	1.03	0.05	0.346	0.36
	5.8G WLAN	802.11n HT40	Left Cheek	159	w/	9.0	8.86	1.03	0.16	0.268	0.28
	5.8G WLAN	802.11n HT40	Left Tilted	159	w/	9.0	8.86	1.03	0.17	0.255	0.26

4.7.3 SAR Results for Body-worn Exposure Condition (Test Separation Distance is 15 mm)

Plot No.	Band	Mode	Test Position	Ch.	Tx Antenna	Power Reduction	Max. Tune-up Power (dBm)	Measured Conducted Power (dBm)	Scaling Factor	Power Drift (dB)	Measured SAR-1g (W/kg)	Scaled SAR-1g (W/kg)
	GSM850	GPRS10	Front Face	189	0	w/o	32.0	31.98	1.00	-0.1	0.447	0.45
	GSM850	GPRS10	Rear Face	189	0	w/o	32.0	31.98	1.00	-0.11	0.412	0.41
14	GSM850	GPRS10	Front Face	189	1	w/o	32.0	31.98	1.00	-0.01	0.729	**0.73**
	GSM850	GPRS10	Rear Face	189	1	w/o	32.0	31.98	1.00	0.11	0.610	0.61
15	GSM1900	GPRS10	Front Face	512	0	w/o	30.0	29.79	1.05	-0.13	0.382	**0.40**
	GSM1900	GPRS10	Rear Face	512	0	w/o	30.0	29.79	1.05	0.08	0.289	0.30
	GSM1900	GPRS10	Front Face	512	1	w/o	30.0	29.79	1.05	0.01	0.228	0.24
	GSM1900	GPRS10	Rear Face	512	1	w/o	30.0	29.79	1.05	0.09	0.26	0.27
16	WCDMA II	RMC12.2K	Front Face	9538	0	w/o	25.0	24.83	1.04	0.03	0.458	**0.48**
	WCDMA II	RMC12.2K	Rear Face	9538	0	w/o	25.0	24.83	1.04	-0.15	0.386	0.40
	WCDMA II	RMC12.2K	Front Face	9538	1	w/o	25.0	24.83	1.04	0.05	0.107	0.11
	WCDMA II	RMC12.2K	Rear Face	9538	1	w/o	25.0	24.83	1.04	0.11	0.141	0.15
	WCDMA V	RMC12.2K	Front Face	4182	0	w/o	24.0	23.96	1.01	-0.01	0.184	0.19
	WCDMA V	RMC12.2K	Rear Face	4182	0	w/o	24.0	23.96	1.01	-0.08	0.175	0.18
17	WCDMA V	RMC12.2K	Front Face	4182	1	w/o	24.0	23.96	1.01	-0.05	0.391	**0.39**
	WCDMA V	RMC12.2K	Rear Face	4182	1	w/o	24.0	23.96	1.01	0.02	0.347	0.35

Plot No.	Band	Mode	Test Position	Ch.	Tx Antenna	Power Reduction	RB#	RB Offset	Max. Tune-up Power (dBm)	Measured Conducted Power (dBm)	Scaling Factor	Power Drift (dB)	Measured SAR-1g (W/kg)	Scaled SAR-1g (W/kg)
18	LTE 2	QPSK20M	Front Face	18900	0	w/o	1	0	24.0	23.99	1.00	-0.15	0.466	**0.47**
	LTE 2	QPSK20M	Rear Face	18900	0	w/o	1	0	24.0	23.99	1.00	0.18	0.401	0.40
	LTE 2	QPSK20M	Front Face	18900	0	w/o	50	0	23.0	22.97	1.01	-0.15	0.432	0.43
	LTE 2	QPSK20M	Rear Face	18900	0	w/o	50	0	23.0	22.97	1.01	-0.11	0.353	0.36
	LTE 2	QPSK20M	Front Face	18900	1	w/o	1	0	24.0	23.99	1.00	-0.06	0.101	0.10
	LTE 2	QPSK20M	Rear Face	18900	1	w/o	1	0	24.0	23.99	1.00	-0.17	0.146	0.15
	LTE 2	QPSK20M	Front Face	18900	1	w/o	50	0	23.0	22.97	1.01	0.05	0.081	0.08
	LTE 2	QPSK20M	Rear Face	18900	1	w/o	50	0	23.0	22.97	1.01	0.11	0.103	0.10

Plot No.	Band	Mode	Test Position	Ch.	Tx Antenna	Power Reduction	RB#	RB Offset	Max. Tune-up Power (dBm)	Measured Conducted Power (dBm)	Scaling Factor	Power Drift (dB)	Measured SAR-1g (W/kg)	Scaled SAR-1g (W/kg)
	LTE 5	QPSK10M	Front Face	20600	0	w/o	1	0	24.0	23.78	1.05	-0.03	0.230	0.24
	LTE 5	QPSK10M	Rear Face	20600	0	w/o	1	0	24.0	23.78	1.05	0.08	0.223	0.23
	LTE 5	QPSK10M	Front Face	20600	0	w/o	25	0	23.0	22.82	1.04	-0.01	0.187	0.19
	LTE 5	QPSK10M	Rear Face	20600	0	w/o	25	0	23.0	22.82	1.04	-0.18	0.183	0.19
19	LTE 5	QPSK10M	Front Face	20600	1	w/o	1	0	24.0	23.78	1.05	-0.06	0.426	**0.45**
	LTE 5	QPSK10M	Rear Face	20600	1	w/o	1	0	24.0	23.78	1.05	-0.08	0.369	0.39
	LTE 5	QPSK10M	Front Face	20600	1	w/o	25	0	23.0	22.82	1.04	0.14	0.321	0.33
	LTE 5	QPSK10M	Rear Face	20600	1	w/o	25	0	23.0	22.82	1.04	0.01	0.29	0.30
	LTE 7	QPSK20M	Front Face	21350	0	w/o	1	50	23.0	22.90	1.02	0.03	0.305	0.31
20	LTE 7	QPSK20M	Rear Face	21350	0	w/o	1	50	23.0	22.90	1.02	-0.02	0.393	**0.40**
	LTE 7	QPSK20M	Front Face	21350	0	w/o	50	25	22.0	21.96	1.01	0.01	0.285	0.29
	LTE 7	QPSK20M	Rear Face	21350	0	w/o	50	25	22.0	21.96	1.01	-0.05	0.361	0.36
	LTE 26	QPSK15M	Front Face	26865	0	w/o	1	0	24.0	23.83	1.04	0	0.255	0.27
	LTE 26	QPSK15M	Rear Face	26865	0	w/o	1	0	24.0	23.83	1.04	0.11	0.251	0.26
	LTE 26	QPSK15M	Front Face	26865	0	w/o	36	0	23.0	22.84	1.04	-0.15	0.202	0.21
	LTE 26	QPSK15M	Rear Face	26865	0	w/o	36	0	23.0	22.84	1.04	-0.18	0.193	0.20
21	LTE 26	QPSK15M	Front Face	26865	1	w/o	1	0	24.0	23.83	1.04	-0.05	0.396	**0.41**
	LTE 26	QPSK15M	Rear Face	26865	1	w/o	1	0	24.0	23.83	1.04	0.02	0.326	0.34
	LTE 26	QPSK15M	Front Face	26865	1	w/o	36	0	23.0	22.84	1.04	0.06	0.324	0.34
	LTE 26	QPSK15M	Rear Face	26865	1	w/o	36	0	23.0	22.84	1.04	-0.07	0.273	0.28
	LTE 41	QPSK20M	Front Face	40240	0	w/o	1	50	24.0	23.87	1.03	0.07	0.145	0.15
22	LTE 41	QPSK20M	Rear Face	40240	0	w/o	1	50	24.0	23.87	1.03	-0.03	0.222	**0.23**
	LTE 41	QPSK20M	Front Face	40240	0	w/o	50	25	23.0	22.79	1.05	-0.06	0.121	0.13
	LTE 41	QPSK20M	Rear Face	40240	0	w/o	50	25	23.0	22.79	1.05	-0.01	0.184	0.19

Plot No.	Band	Mode	Test Position	Ch.	Power Reduction	Max. Tune-up Power (dBm)	Measured Conducted Power (dBm)	Scaling Factor	Power Drift (dB)	Measured SAR-1g (W/kg)	Scaled SAR-1g (W/kg)
	2.4G WLAN	802.11b	Front Face	1	w/o	17.5	17.26	1.06	0.07	0.155	0.16
23	2.4G WLAN	802.11b	Rear Face	1	w/o	17.5	17.26	1.06	0.01	0.188	**0.20**
25	5.3G WLAN	802.11n HT40	Front Face	62	w/o	17.5	17.32	1.04	-0.08	0.235	**0.24**
	5.3G WLAN	802.11n HT40	Rear Face	62	w/o	17.5	17.32	1.04	-0.07	0.183	0.19
26	5.6G WLAN	802.11n HT40	Front Face	102	w/o	17.5	17.36	1.03	-0.1	0.406	**0.42**
	5.6G WLAN	802.11n HT40	Rear Face	102	w/o	17.5	17.36	1.03	0.08	0.285	0.29
27	5.8G WLAN	802.11n HT40	Front Face	159	w/o	17.5	17.26	1.06	-0.13	0.159	**0.17**
	5.8G WLAN	802.11n HT40	Rear Face	159	w/o	17.5	17.26	1.06	0.11	0.155	0.16

Plot No.	Band	Mode	Test Position	Ch.	Max. Tune-up Power (dBm)	Measured Conducted Power (dBm)	Scaling Factor	Power Drift (dB)	Measured SAR-1g (W/kg)	Scaled SAR-1g (W/kg)
	Bluetooth	DH1	Front Face	0	10.5	10.26	1.06	0.05	0.021	0.02
28	Bluetooth	DH1	Rear Face	0	10.5	10.26	1.06	-0.02	0.029	**0.03**

4.7.4 SAR Results for Hotspot Exposure Condition (Test Separation Distance is 10 mm)

Plot No.	Band	Mode	Test Position	Ch.	Tx Antenna	Power Reduction	Max. Tune-up Power (dBm)	Measured Conducted Power (dBm)	Scaling Factor	Power Drift (dB)	Measured SAR-1g (W/kg)	Scaled SAR-1g (W/kg)
	GSM850	GPRS10	Front Face	189	0	w/o	32.0	31.98	1.00	0.01	0.798	0.80
	GSM850	GPRS10	Rear Face	189	0	w/o	32.0	31.98	1.00	-0.05	0.735	0.74
	GSM850	GPRS10	Left Side	189	0	w/o	32.0	31.98	1.00	0.15	0.08	0.08
	GSM850	GPRS10	Right Side	189	0	w/o	32.0	31.98	1.00	0.18	0.338	0.34
	GSM850	GPRS10	Bottom Side	189	0	w/o	32.0	31.98	1.00	-0.17	0.461	0.46
	GSM850	GPRS10	Front Face	189	1	w/	28.0	27.69	1.07	-0.07	0.436	0.47
	GSM850	GPRS10	Rear Face	189	1	w/	28.0	27.69	1.07	0.02	0.365	0.39
	GSM850	GPRS10	Left Side	189	1	w/	28.0	27.69	1.07	0.06	0.18	0.19
	GSM850	GPRS10	Right Side	189	1	w/	28.0	27.69	1.07	-0.05	0.028	0.03
	GSM850	GPRS10	Top Side	189	1	w/	28.0	27.69	1.07	0.04	0.234	0.25
	GSM850	GPRS10	Front Face	128	0	w/o	32.0	31.95	1.01	-0.1	0.701	0.71
29	GSM850	GPRS10	Front Face	251	0	w/o	32.0	31.92	1.02	0.01	0.83	**0.85**
	GSM850	GPRS10	Front Face	251	0	w/o	32.0	31.92	1.02	0.01	0.78	0.79
	GSM1900	GPRS10	Front Face	512	0	w/	26.5	26.10	1.10	-0.05	0.831	0.91
	GSM1900	GPRS10	Rear Face	512	0	w/	26.5	26.10	1.10	0.02	0.593	0.65
	GSM1900	GPRS10	Left Side	512	0	w/	26.5	26.10	1.10	0.04	0.032	0.04
	GSM1900	GPRS10	Right Side	512	0	w/	26.5	26.10	1.10	-0.05	0.16	0.18
30	GSM1900	GPRS10	Bottom Side	512	0	w/	26.5	26.10	1.10	-0.09	0.952	**1.04**
	GSM1900	GPRS10	Front Face	512	1	w/o	30.0	29.79	1.05	0.12	0.371	0.39
	GSM1900	GPRS10	Rear Face	512	1	w/o	30.0	29.79	1.05	0.04	0.424	0.45
	GSM1900	GPRS10	Left Side	512	1	w/o	30.0	29.79	1.05	0.09	0.090	0.09
	GSM1900	GPRS10	Right Side	512	1	w/o	30.0	29.79	1.05	0.13	0.036	0.04
	GSM1900	GPRS10	Top Side	512	1	w/o	30.0	29.79	1.05	0.03	0.432	0.45
	GSM1900	GPRS10	Front Face	661	0	w/	26.5	26.02	1.12	0.04	0.622	0.69
	GSM1900	GPRS10	Front Face	810	0	w/	26.5	25.89	1.15	-0.13	0.582	0.67
	GSM1900	GPRS10	Bottom Side	661	0	w/	26.5	26.02	1.12	0.07	0.784	0.88
	GSM1900	GPRS10	Bottom Side	810	0	w/	26.5	25.89	1.15	0.02	0.755	0.87
	GSM1900	GPRS10	Bottom Side	512	0	w/	26.5	26.10	1.10	-0.09	0.943	1.03
	WCDMA II	RMC12.2K	Front Face	9538	0	w/	22.0	21.99	1.00	0.05	0.598	0.60
	WCDMA II	RMC12.2K	Rear Face	9538	0	w/	22.0	21.99	1.00	-0.01	0.505	0.51
	WCDMA II	RMC12.2K	Left Side	9538	0	w/	22.0	21.99	1.00	0.04	0.03	0.03
	WCDMA II	RMC12.2K	Right Side	9538	0	w/	22.0	21.99	1.00	0.11	0.125	0.13
	WCDMA II	RMC12.2K	Bottom Side	9538	0	w/	22.0	21.99	1.00	0.05	0.818	0.82
	WCDMA II	RMC12.2K	Front Face	9538	1	w/o	25.0	24.83	1.04	0.01	0.237	0.25
	WCDMA II	RMC12.2K	Rear Face	9538	1	w/o	25.0	24.83	1.04	0.16	0.313	0.33
	WCDMA II	RMC12.2K	Left Side	9538	1	w/o	25.0	24.83	1.04	0.05	0.065	0.07
	WCDMA II	RMC12.2K	Right Side	9538	1	w/o	25.0	24.83	1.04	0.17	0.004	0.00
	WCDMA II	RMC12.2K	Top Side	9538	1	w/o	25.0	24.83	1.04	0.03	0.244	0.25
	WCDMA II	RMC12.2K	Bottom Side	9262	0	w/	22.0	21.87	1.03	0.14	0.882	0.91
31	WCDMA II	RMC12.2K	Bottom Side	9400	0	w/	22.0	21.75	1.06	-0.07	1.07	**1.13**
	WCDMA II	RMC12.2K	Bottom Side	9400	0	w/	22.0	21.75	1.06	0.04	1.06	1.12
	WCDMA V	RMC12.2K	Front Face	4182	0	w/o	24.0	23.96	1.01	-0.01	0.289	0.29
	WCDMA V	RMC12.2K	Rear Face	4182	0	w/o	24.0	23.96	1.01	0.11	0.275	0.28
	WCDMA V	RMC12.2K	Left Side	4182	0	w/o	24.0	23.96	1.01	0.08	0.045	0.05
	WCDMA V	RMC12.2K	Right Side	4182	0	w/o	24.0	23.96	1.01	-0.15	0.122	0.12
	WCDMA V	RMC12.2K	Bottom Side	4182	0	w/o	24.0	23.96	1.01	-0.17	0.186	0.19
32	WCDMA V	RMC12.2K	Front Face	4182	1	w/o	24.0	23.96	1.01	-0.03	0.899	**0.91**
	WCDMA V	RMC12.2K	Rear Face	4182	1	w/o	24.0	23.96	1.01	-0.08	0.781	0.79
	WCDMA V	RMC12.2K	Left Side	4182	1	w/o	24.0	23.96	1.01	-0.11	0.302	0.30
	WCDMA V	RMC12.2K	Right Side	4182	1	w/o	24.0	23.96	1.01	-0.15	0.007	0.01
	WCDMA V	RMC12.2K	Top Side	4182	1	w/o	24.0	23.96	1.01	0.08	0.490	0.49
	WCDMA V	RMC12.2K	Front Face	4132	1	w/o	24.0	23.93	1.02	0.02	0.878	0.89
	WCDMA V	RMC12.2K	Front Face	4233	1	w/o	24.0	23.88	1.03	0.05	0.885	0.91
	WCDMA V	RMC12.2K	Front Face	4182	1	w/o	24.0	23.96	1.01	0.06	0.887	0.90

Plot No.	Band	Mode	Test Position	Ch.	Tx Antenna	Power Reduction	RB#	RB Offset	Max. Tune-up Power (dBm)	Measured Conducted Power (dBm)	Scaling Factor	Power Drift (dB)	Measured SAR-1g (W/kg)	Scaled SAR-1g (W/kg)
	LTE 2	QPSK20M	Front Face	18900	0	w/	1	0	21.0	20.99	1.00	0.08	0.718	0.72
	LTE 2	QPSK20M	Rear Face	18900	0	w/	1	0	21.0	20.99	1.00	-0.15	0.618	0.62
	LTE 2	QPSK20M	Left Side	18900	0	w/	1	0	21.0	20.99	1.00	0.01	0.034	0.03
	LTE 2	QPSK20M	Right Side	18900	0	w/	1	0	21.0	20.99	1.00	0.13	0.156	0.16
	LTE 2	QPSK20M	Bottom Side	18900	0	w/	1	0	21.0	20.99	1.00	0.17	0.986	0.99
	LTE 2	QPSK20M	Front Face	18900	0	w/	50	0	20.0	19.98	1.00	-0.08	0.665	0.67
	LTE 2	QPSK20M	Rear Face	18900	0	w/	50	0	20.0	19.98	1.00	-0.01	0.544	0.55
	LTE 2	QPSK20M	Left Side	18900	0	w/	50	0	20.0	19.98	1.00	0.17	0.03	0.03
	LTE 2	QPSK20M	Right Side	18900	0	w/	50	0	20.0	19.98	1.00	0.09	0.142	0.14
	LTE 2	QPSK20M	Bottom Side	18900	0	w/	50	0	20.0	19.98	1.00	-0.05	0.872	0.88
	LTE 2	QPSK20M	Front Face	18900	1	w/o	1	0	24.0	23.99	1.00	0.09	0.26	0.26
	LTE 2	QPSK20M	Rear Face	18900	1	w/o	1	0	24.0	23.99	1.00	0.18	0.374	0.37
	LTE 2	QPSK20M	Left Side	18900	1	w/o	1	0	24.0	23.99	1.00	0.13	0.076	0.08
	LTE 2	QPSK20M	Right Side	18900	1	w/o	1	0	24.0	23.99	1.00	0.17	0.002	0.00
	LTE 2	QPSK20M	Top Side	18900	1	w/o	1	0	24.0	23.99	1.00	0.01	0.386	0.39
	LTE 2	QPSK20M	Front Face	18900	1	w/o	50	0	23.0	22.97	1.01	0.09	0.206	0.21
	LTE 2	QPSK20M	Rear Face	18900	1	w/o	50	0	23.0	22.97	1.01	-0.05	0.263	0.26
	LTE 2	QPSK20M	Left Side	18900	1	w/o	50	0	23.0	22.97	1.01	-0.08	0.062	0.06
	LTE 2	QPSK20M	Right Side	18900	1	w/o	50	0	23.0	22.97	1.01	0.08	0.001	0.00
	LTE 2	QPSK20M	Top Side	18900	1	w/o	50	0	23.0	22.97	1.01	-0.18	0.347	0.35
	LTE 2	QPSK20M	Bottom Side	18700	0	w/	1	0	21.0	20.87	1.03	0	0.959	0.99
33	LTE 2	QPSK20M	Bottom Side	19100	0	w/	1	0	21.0	20.98	1.00	-0.06	1.04	**1.04**
	LTE 2	QPSK20M	Bottom Side	18700	0	w/	50	0	20.0	19.94	1.01	-0.05	0.852	0.86
	LTE 2	QPSK20M	Bottom Side	19100	0	w/	50	0	20.0	19.90	1.02	0.09	0.812	0.83
	LTE 2	QPSK20M	Bottom Side	18900	0	w/	100	0	20.0	19.97	1.01	0.15	0.758	0.76
	LTE 2	QPSK20M	Bottom Side	19100	0	w/	1	0	21.0	20.98	1.00	-0.06	0.998	1.00
	LTE 5	QPSK10M	Front Face	20600	0	w/o	1	0	24.0	23.78	1.05	-0.04	0.394	0.41
	LTE 5	QPSK10M	Rear Face	20600	0	w/o	1	0	24.0	23.78	1.05	-0.02	0.383	0.40
	LTE 5	QPSK10M	Left Side	20600	0	w/o	1	0	24.0	23.78	1.05	0.01	0.038	0.04
	LTE 5	QPSK10M	Right Side	20600	0	w/o	1	0	24.0	23.78	1.05	0.13	0.185	0.19
	LTE 5	QPSK10M	Bottom Side	20600	0	w/o	1	0	24.0	23.78	1.05	0.17	0.232	0.24
	LTE 5	QPSK10M	Front Face	20600	0	w/o	25	0	23.0	22.82	1.04	0.09	0.32	0.33
	LTE 5	QPSK10M	Rear Face	20600	0	w/o	25	0	23.0	22.82	1.04	-0.05	0.315	0.33
	LTE 5	QPSK10M	Left Side	20600	0	w/o	25	0	23.0	22.82	1.04	-0.08	0.003	0.00
	LTE 5	QPSK10M	Right Side	20600	0	w/o	25	0	23.0	22.82	1.04	-0.01	0.154	0.16
	LTE 5	QPSK10M	Bottom Side	20600	0	w/o	25	0	23.0	22.82	1.04	0.03	0.193	0.20
34	LTE 5	QPSK10M	Front Face	20600	1	w/o	1	0	24.0	23.78	1.05	-0.01	0.710	**0.75**
	LTE 5	QPSK10M	Rear Face	20600	1	w/o	1	0	24.0	23.78	1.05	0.07	0.616	0.65
	LTE 5	QPSK10M	Left Side	20600	1	w/o	1	0	24.0	23.78	1.05	0.09	0.245	0.26
	LTE 5	QPSK10M	Right Side	20600	1	w/o	1	0	24.0	23.78	1.05	0.07	0.045	0.05
	LTE 5	QPSK10M	Top Side	20600	1	w/o	1	0	24.0	23.78	1.05	0.13	0.008	0.01
	LTE 5	QPSK10M	Front Face	20600	1	w/o	25	0	23.0	22.82	1.04	0.13	0.535	0.56
	LTE 5	QPSK10M	Rear Face	20600	1	w/o	25	0	23.0	22.82	1.04	-0.08	0.484	0.50
	LTE 5	QPSK10M	Left Side	20600	1	w/o	25	0	23.0	22.82	1.04	-0.01	0.189	0.20
	LTE 5	QPSK10M	Right Side	20600	1	w/o	25	0	23.0	22.82	1.04	0.11	0.006	0.01
	LTE 5	QPSK10M	Top Side	20600	1	w/o	25	0	23.0	22.82	1.04	0	0.001	0.00

Note: The "< 0.001" means there is no SAR value or the SAR is too low to be measured.

Plot No.	Band	Mode	Test Position	Ch.	Tx Antenna	Power Reduction	RB#	RB Offset	Max. Tune-up Power (dBm)	Measured Conducted Power (dBm)	Scaling Factor	Power Drift (dB)	Measured SAR-1g (W/kg)	Scaled SAR-1g (W/kg)
	LTE 7	QPSK20M	Front Face	21350	0	w/o	1	50	23.0	22.90	1.02	0.01	0.471	0.48
	LTE 7	QPSK20M	Rear Face	21350	0	w/o	1	50	23.0	22.90	1.02	0.13	0.606	0.62
	LTE 7	QPSK20M	Left Side	21350	0	w/o	1	50	23.0	22.90	1.02	0.17	0.285	0.29
	LTE 7	QPSK20M	Right Side	21350	0	w/o	1	50	23.0	22.90	1.02	0.09	0.112	0.11
	LTE 7	QPSK20M	Bottom Side	21350	0	w/o	1	50	23.0	22.90	1.02	-0.05	1.09	1.12
	LTE 7	QPSK20M	Front Face	21350	0	w/o	50	25	22.0	21.96	1.01	0.09	0.439	0.44
	LTE 7	QPSK20M	Rear Face	21350	0	w/o	50	25	22.0	21.96	1.01	-0.05	0.557	0.56
	LTE 7	QPSK20M	Left Side	21350	0	w/o	50	25	22.0	21.96	1.01	-0.08	0.243	0.25
	LTE 7	QPSK20M	Right Side	21350	0	w/o	50	25	22.0	21.96	1.01	-0.01	0.098	0.10
	LTE 7	QPSK20M	Bottom Side	21350	0	w/o	50	25	22.0	21.96	1.01	0.14	0.885	0.89
	LTE 7	QPSK20M	Bottom Side	20850	0	w/o	1	50	23.0	22.79	1.05	-0.04	1.05	1.10
35	LTE 7	QPSK20M	Bottom Side	21100	0	w/o	1	50	23.0	22.81	1.04	0.13	1.13	**1.18**
	LTE 7	QPSK20M	Bottom Side	20850	0	w/o	50	25	22.0	21.85	1.04	-0.01	0.862	0.89
	LTE 7	QPSK20M	Bottom Side	21100	0	w/o	50	25	22.0	21.87	1.03	-0.09	0.907	0.93
	LTE 7	QPSK20M	Bottom Side	21350	0	w/o	100	0	22.0	21.90	1.02	0.07	0.902	0.92
	LTE 7	QPSK20M	Bottom Side	21100	0	w/o	1	50	23.0	22.81	1.04	0.13	1.08	1.13
	LTE 26	QPSK15M	Front Face	26865	0	w/o	1	0	24.0	23.83	1.04	-0.05	0.463	0.48
	LTE 26	QPSK15M	Rear Face	26865	0	w/o	1	0	24.0	23.83	1.04	0.09	0.456	0.47
	LTE 26	QPSK15M	Left Side	26865	0	w/o	1	0	24.0	23.83	1.04	-0.05	0.073	0.08
	LTE 26	QPSK15M	Right Side	26865	0	w/o	1	0	24.0	23.83	1.04	-0.08	0.206	0.21
	LTE 26	QPSK15M	Bottom Side	26865	0	w/o	1	0	24.0	23.83	1.04	-0.01	0.297	0.31
	LTE 26	QPSK15M	Front Face	26865	0	w/o	36	0	23.0	22.84	1.04	0.03	0.367	0.38
	LTE 26	QPSK15M	Rear Face	26865	0	w/o	36	0	23.0	22.84	1.04	0.09	0.351	0.36
	LTE 26	QPSK15M	Left Side	26865	0	w/o	36	0	23.0	22.84	1.04	-0.05	0.05	0.05
	LTE 26	QPSK15M	Right Side	26865	0	w/o	36	0	23.0	22.84	1.04	-0.08	0.169	0.18
	LTE 26	QPSK15M	Bottom Side	26865	0	w/o	36	0	23.0	22.84	1.04	0.13	0.242	0.25
36	LTE 26	QPSK15M	Front Face	26865	1	w/o	1	0	24.0	23.83	1.04	-0.08	0.761	**0.79**
	LTE 26	QPSK15M	Rear Face	26865	1	w/o	1	0	24.0	23.83	1.04	0.09	0.644	0.67
	LTE 26	QPSK15M	Left Side	26865	1	w/o	1	0	24.0	23.83	1.04	-0.11	0.257	0.27
	LTE 26	QPSK15M	Right Side	26865	1	w/o	1	0	24.0	23.83	1.04	0.05	0.053	0.06
	LTE 26	QPSK15M	Top Side	26865	1	w/o	1	0	24.0	23.83	1.04	-0.11	0.008	0.01
	LTE 26	QPSK15M	Front Face	26865	1	w/o	36	0	23.0	22.84	1.04	-0.11	0.639	0.66
	LTE 26	QPSK15M	Rear Face	26865	1	w/o	36	0	23.0	22.84	1.04	-0.15	0.539	0.56
	LTE 26	QPSK15M	Left Side	26865	1	w/o	36	0	23.0	22.84	1.04	0.05	0.208	0.22
	LTE 26	QPSK15M	Right Side	26865	1	w/o	36	0	23.0	22.84	1.04	0.11	0.002	0.00
	LTE 26	QPSK15M	Top Side	26865	1	w/o	36	0	23.0	22.84	1.04	0.12	0.342	0.35

Plot No.	Band	Mode	Test Position	Ch.	Tx Antenna	Power Reduction	RB#	RB Offset	Max. Tune-up Power (dBm)	Measured Conducted Power (dBm)	Scaling Factor	Power Drift (dB)	Measured SAR-1g (W/kg)	Scaled SAR-1g (W/kg)
	LTE 41	QPSK20M	Front Face	40240	0	w/o	1	50	24.0	23.87	1.03	0.16	0.335	0.35
	LTE 41	QPSK20M	Rear Face	40240	0	w/o	1	50	24.0	23.87	1.03	0.11	0.511	0.53
	LTE 41	QPSK20M	Left Side	40240	0	w/o	1	50	24.0	23.87	1.03	0.15	0.221	0.23
	LTE 41	QPSK20M	Right Side	40240	0	w/o	1	50	24.0	23.87	1.03	-0.17	0.089	0.09
37	LTE 41	QPSK20M	Bottom Side	40240	0	w/o	1	50	24.0	23.87	1.03	-0.1	0.728	**0.75**
	LTE 41	QPSK20M	Front Face	40240	0	w/o	50	25	23.0	22.79	1.05	-0.15	0.279	0.29
	LTE 41	QPSK20M	Rear Face	40240	0	w/o	50	25	23.0	22.79	1.05	-0.07	0.423	0.44
	LTE 41	QPSK20M	Left Side	40240	0	w/o	50	25	23.0	22.79	1.05	-0.08	0.181	0.19
	LTE 41	QPSK20M	Right Side	40240	0	w/o	50	25	23.0	22.79	1.05	-0.12	0.072	0.08
	LTE 41	QPSK20M	Bottom Side	40240	0	w/o	50	25	23.0	22.79	1.05	0.11	0.601	0.63

Plot No.	Band	Mode	Test Position	Ch.	Power Reduction	Max. Tune-up Power (dBm)	Measured Conducted Power (dBm)	Scaling Factor	Power Drift (dB)	Measured SAR-1g (W/kg)	Scaled SAR-1g (W/kg)
	2.4G WLAN	802.11b	Front Face	1	w/o	17.5	17.26	1.06	0.08	0.295	0.31
38	2.4G WLAN	802.11b	Rear Face	1	w/o	17.5	17.26	1.06	0.01	0.359	**0.38**
	2.4G WLAN	802.11b	Left Side	1	w/o	17.5	17.26	1.06	-0.11	0.159	0.17
	2.4G WLAN	802.11b	Top Side	1	w/o	17.5	17.26	1.06	-0.15	0.216	0.23
39	5.2G WLAN	802.11n HT40	Front Face	46	w/o	17.5	17.26	1.06	-0.02	0.314	**0.33**
	5.2G WLAN	802.11n HT40	Rear Face	46	w/o	17.5	17.26	1.06	0.11	0.286	0.30
	5.2G WLAN	802.11n HT40	Left Side	46	w/o	17.5	17.26	1.06	0.18	0.115	0.12
	5.2G WLAN	802.11n HT40	Top Side	46	w/o	17.5	17.26	1.06	-0.11	0.201	0.21
40	5.8G WLAN	802.11n HT40	Front Face	159	w/o	17.5	17.26	1.06	-0.07	0.343	**0.36**
	5.8G WLAN	802.11n HT40	Rear Face	159	w/o	17.5	17.26	1.06	0.05	0.335	0.35
	5.8G WLAN	802.11n HT40	Left Side	159	w/o	17.5	17.26	1.06	0.11	0.145	0.15
	5.8G WLAN	802.11n HT40	Top Side	159	w/o	17.5	17.26	1.06	0.01.	0.23	0.24

4.7.5 SAR Measurement Variability

According to KDB 865664 D01, SAR measurement variability was assessed for each frequency band, which is determined by the SAR probe calibration point and tissue-equivalent medium used for the device measurements. When both head and body tissue-equivalent media are required for SAR measurements in a frequency band, the variability measurement procedures should be applied to the tissue medium with the highest measured SAR, using the highest measured SAR configuration for that tissue-equivalent medium. Alternatively, if the highest measured SAR for both head and body tissue-equivalent media are ≤ 1.45 W/kg and the ratio of these highest SAR values, i.e., largest divided by smallest value, is ≤ 1.10, the highest SAR configuration for either head or body tissue-equivalent medium may be used to perform the repeated measurement. These additional measurements are repeated after the completion of all measurements requiring the same head or body tissue-equivalent medium in a frequency band. The test device should be returned to ambient conditions (normal room temperature) with the battery fully charged before it is re-mounted on the device holder for the repeated measurement(s) to minimize any unexpected variations in the repeated results.

SAR repeated measurement procedure:

1. When the highest measured SAR is < 0.80 W/kg, repeated measurement is not required.
2. When the highest measured SAR is >= 0.80 W/kg, repeat that measurement once.
3. If the ratio of largest to smallest SAR for the original and first repeated measurements is > 1.20, or when the original or repeated measurement is >= 1.45 W/kg, perform a second repeated measurement.
4. If the ratio of largest to smallest SAR for the original, first and second repeated measurements is > 1.20, and the original, first or second repeated measurement is >= 1.5 W/kg, perform a third repeated measurement.

Band	Test Position	Ch.	Tx Antenna	Original Measured SAR-1g (W/kg)	1st Repeated SAR-1g (W/kg)	L/S Ratio	2nd Repeated SAR-1g (W/kg)	L/S Ratio	3rd Repeated SAR-1g (W/kg)	L/S Ratio
GSM850	Right Cheek	189	1	1.05	1.03	1.02	N/A	N/A	N/A	N/A
GSM1900	Right Cheek	512	1	0.818	0.808	1.01	N/A	N/A	N/A	N/A
WCDMA II	Right Cheek	9538	1	1.09	1.07	1.02	N/A	N/A	N/A	N/A
WCDMA V	Right Cheek	4182	1	0.943	0.938	1.01	N/A	N/A	N/A	N/A
LTE 2	Left Cheek	19100	1	0.842	0.838	1.00	N/A	N/A	N/A	N/A
LTE 5	Right Cheek	20600	1	1.05	1.02	1.03	N/A	N/A	N/A	N/A
LTE 26	Right Cheek	26965	1	1.05	1.03	1.02	N/A	N/A	N/A	N/A
GSM850	Front Face	251	0	0.83	0.78	1.06	N/A	N/A	N/A	N/A
GSM1900	Bottom Side	512	0	0.952	0.943	1.01	N/A	N/A	N/A	N/A
WCDMA II	Bottom Side	9400	0	1.07	1.06	1.01	N/A	N/A	N/A	N/A
WCDMA V	Front Face	4182	1	0.899	0.887	1.01	N/A	N/A	N/A	N/A
LTE 2	Bottom Side	19100	0	1.04	0.998	1.04	N/A	N/A	N/A	N/A
LTE 7	Bottom Side	21100	0	1.13	1.08	1.05	N/A	N/A	N/A	N/A

4.7.6 Simultaneous Multi-band Transmission Evaluation

<Possibilities of Simultaneous Transmission>

The simultaneous transmission possibilities for this device are listed as below.

Simultaneous TX Combination	Capable Transmit Configurations	Head Exposure Condition	Body-worn Exposure Condition	Hotspot Exposure Condition
1	GSM + WLAN 2.4G	Yes	Yes	Yes
2	GSM + WLAN 5G	Yes	Yes	Yes
3	GSM + BT (Data)	No	Yes	No
4	WCDMA + WLAN 2.4G	Yes	Yes	Yes
5	WCDMA + WLAN 5G	Yes	Yes	Yes
6	WCDMA + BT	No	Yes	No
7	LTE + WLAN 2.4G	Yes	Yes	Yes
8	LTE + WLAN 5G	Yes	Yes	Yes
9	LTE + BT	No	Yes	No

Note :

1. The WLAN 2.4G and WLAN 5G cannot transmit simultaneously.
2. The WLAN and Bluetooth cannot transmit simultaneously.

<SAR Summation Analysis>

Simultaneous transmission SAR test exclusion is determined for each operating configuration and exposure condition according to the reported standalone SAR of each applicable simultaneous transmitting antenna. When the sum of SAR_{1g} of all simultaneously transmitting antennas in an operating mode and exposure condition combination is within the SAR limit (SAR_{1g} 1.6 W/kg), the simultaneous transmission SAR is not required. When the sum of SAR_{1g} is greater than the SAR limit (SAR_{1g} 1.6 W/kg), SAR test exclusion is determined by the SPLSR.

No.	Conditions (SAR1 + SAR2)	Exposure Condition	Test Position	Max. SAR1	Max. SAR2	SAR Summation	SPLSR Analysis
1	GSM850 + WLAN (DTS)	Head	Right Cheek	1.13	0.33	1.46	Σ SAR < 1.6, Not required
			Right Tilted	1.03	0.27	1.30	Σ SAR < 1.6, Not required
			Left Cheek	1.12	0.11	1.23	Σ SAR < 1.6, Not required
			Left Tilted	0.91	0.12	1.03	Σ SAR < 1.6, Not required
		Body-Worn	Front Face	0.73	0.16	0.89	Σ SAR < 1.6, Not required
			Rear Face	0.61	0.20	0.81	Σ SAR < 1.6, Not required
		Hotspot	Front Face	0.85	0.31	1.16	Σ SAR < 1.6, Not required
			Rear Face	0.74	0.38	1.12	Σ SAR < 1.6, Not required
			Left Side	0.19	0.17	0.36	Σ SAR < 1.6, Not required
			Right Side	0.34	0.00	0.34	Σ SAR < 1.6, Not required
			Top Side	0.25	0.23	0.48	Σ SAR < 1.6, Not required
			Bottom Side	0.46	0.00	0.46	Σ SAR < 1.6, Not required
2	GSM850 + WLAN (NII)	Head	Right Cheek	1.13	0.46	**1.59**	Σ SAR < 1.6, Not required
			Right Tilted	1.03	0.41	1.44	Σ SAR < 1.6, Not required
			Left Cheek	1.12	0.31	1.43	Σ SAR < 1.6, Not required
			Left Tilted	0.91	0.34	1.25	Σ SAR < 1.6, Not required
		Body-Worn	Front Face	0.73	0.42	**1.15**	Σ SAR < 1.6, Not required
			Rear Face	0.61	0.29	0.90	Σ SAR < 1.6, Not required
		Hotspot	Front Face	0.85	0.36	1.21	Σ SAR < 1.6, Not required
			Rear Face	0.74	0.35	1.09	Σ SAR < 1.6, Not required
			Left Side	0.19	0.15	0.34	Σ SAR < 1.6, Not required
			Right Side	0.34	0.00	0.34	Σ SAR < 1.6, Not required
			Top Side	0.25	0.24	0.49	Σ SAR < 1.6, Not required
			Bottom Side	0.46	0.00	0.46	Σ SAR < 1.6, Not required
3	GSM850 + BT (DSS)	Body-Worn	Front Face	0.73	0.02	0.75	Σ SAR < 1.6, Not required
			Rear Face	0.61	0.03	0.64	Σ SAR < 1.6, Not required

No.	Conditions (SAR1 + SAR2)	Exposure Condition	Test Position	Max. SAR1	Max. SAR2	SAR Summation	SPLSR Analysis
4	GSM1900 + WLAN (DTS)	Head	Right Cheek	0.97	0.33	1.30	Σ SAR < 1.6, Not required
			Right Tilted	0.87	0.27	1.14	Σ SAR < 1.6, Not required
			Left Cheek	0.83	0.11	0.94	Σ SAR < 1.6, Not required
			Left Tilted	0.79	0.12	0.91	Σ SAR < 1.6, Not required
		Body-Worn	Front Face	0.40	0.16	0.56	Σ SAR < 1.6, Not required
			Rear Face	0.30	0.20	0.50	Σ SAR < 1.6, Not required
		Hotspot	Front Face	0.91	0.31	1.22	Σ SAR < 1.6, Not required
			Rear Face	0.65	0.38	1.03	Σ SAR < 1.6, Not required
			Left Side	0.09	0.17	0.26	Σ SAR < 1.6, Not required
			Right Side	0.18	0.00	0.18	Σ SAR < 1.6, Not required
			Top Side	0.45	0.23	0.68	Σ SAR < 1.6, Not required
			Bottom Side	1.04	0.00	1.04	Σ SAR < 1.6, Not required
5	GSM1900 + WLAN (NII)	Head	Right Cheek	0.97	0.46	1.43	Σ SAR < 1.6, Not required
			Right Tilted	0.87	0.41	1.28	Σ SAR < 1.6, Not required
			Left Cheek	0.83	0.31	1.14	Σ SAR < 1.6, Not required
			Left Tilted	0.79	0.34	1.13	Σ SAR < 1.6, Not required
		Body-Worn	Front Face	0.40	0.42	0.82	Σ SAR < 1.6, Not required
			Rear Face	0.30	0.29	0.59	Σ SAR < 1.6, Not required
		Hotspot	Front Face	0.91	0.36	**1.27**	Σ SAR < 1.6, Not required
			Rear Face	0.65	0.35	1.00	Σ SAR < 1.6, Not required
			Left Side	0.09	0.15	0.24	Σ SAR < 1.6, Not required
			Right Side	0.18	0.00	0.18	Σ SAR < 1.6, Not required
			Top Side	0.45	0.24	0.69	Σ SAR < 1.6, Not required
			Bottom Side	1.04	0.00	1.04	Σ SAR < 1.6, Not required
6	GSM1900 + BT (DSS)	Body-Worn	Front Face	0.40	0.02	0.42	Σ SAR < 1.6, Not required
			Rear Face	0.30	0.03	0.33	Σ SAR < 1.6, Not required

No.	Conditions (SAR1 + SAR2)	Exposure Condition	Test Position	Max. SAR1	Max. SAR2	SAR Summation	SPLSR Analysis
7	WCDMA II + WLAN (DTS)	Head	Right Cheek	1.09	0.33	1.42	Σ SAR < 1.6, Not required
			Right Tilted	1.08	0.27	1.35	Σ SAR < 1.6, Not required
			Left Cheek	1.01	0.11	1.12	Σ SAR < 1.6, Not required
			Left Tilted	1.02	0.12	1.14	Σ SAR < 1.6, Not required
		Body-Worn	Front Face	0.48	0.16	0.64	Σ SAR < 1.6, Not required
			Rear Face	0.40	0.20	0.60	Σ SAR < 1.6, Not required
		Hotspot	Front Face	0.60	0.31	0.91	Σ SAR < 1.6, Not required
			Rear Face	0.51	0.38	0.89	Σ SAR < 1.6, Not required
			Left Side	0.07	0.17	0.24	Σ SAR < 1.6, Not required
			Right Side	0.13	0.00	0.13	Σ SAR < 1.6, Not required
			Top Side	0.25	0.23	0.48	Σ SAR < 1.6, Not required
			Bottom Side	1.13	0.00	1.13	Σ SAR < 1.6, Not required
8	WCDMA II + WLAN (NII)	Head	Right Cheek	1.09	0.46	1.55	Σ SAR < 1.6, Not required
			Right Tilted	1.08	0.41	1.49	Σ SAR < 1.6, Not required
			Left Cheek	1.01	0.31	1.32	Σ SAR < 1.6, Not required
			Left Tilted	1.02	0.34	1.36	Σ SAR < 1.6, Not required
		Body-Worn	Front Face	0.48	0.42	0.90	Σ SAR < 1.6, Not required
			Rear Face	0.40	0.29	0.69	Σ SAR < 1.6, Not required
		Hotspot	Front Face	0.60	0.36	0.96	Σ SAR < 1.6, Not required
			Rear Face	0.51	0.35	0.86	Σ SAR < 1.6, Not required
			Left Side	0.07	0.15	0.22	Σ SAR < 1.6, Not required
			Right Side	0.13	0.00	0.13	Σ SAR < 1.6, Not required
			Top Side	0.25	0.24	0.49	Σ SAR < 1.6, Not required
			Bottom Side	1.13	0.00	1.13	Σ SAR < 1.6, Not required
9	WCDMA II + BT (DSS)	Body-Worn	Front Face	0.48	0.02	0.50	Σ SAR < 1.6, Not required
			Rear Face	0.40	0.03	0.43	Σ SAR < 1.6, Not required

No.	Conditions (SAR1 + SAR2)	Exposure Condition	Test Position	Max. SAR1	Max. SAR2	SAR Summation	SPLSR Analysis
10	WCDMA V + WLAN (DTS)	Head	Right Cheek	1.01	0.33	1.34	Σ SAR < 1.6, Not required
			Right Tilted	0.87	0.27	1.14	Σ SAR < 1.6, Not required
			Left Cheek	0.82	0.11	0.93	Σ SAR < 1.6, Not required
			Left Tilted	0.70	0.12	0.82	Σ SAR < 1.6, Not required
		Body-Worn	Front Face	0.39	0.16	0.55	Σ SAR < 1.6, Not required
			Rear Face	0.35	0.20	0.55	Σ SAR < 1.6, Not required
		Hotspot	Front Face	0.91	0.31	1.22	Σ SAR < 1.6, Not required
			Rear Face	0.79	0.38	1.17	Σ SAR < 1.6, Not required
			Left Side	0.30	0.17	0.47	Σ SAR < 1.6, Not required
			Right Side	0.12	0.00	0.12	Σ SAR < 1.6, Not required
			Top Side	0.49	0.23	0.72	Σ SAR < 1.6, Not required
			Bottom Side	0.19	0.00	0.19	Σ SAR < 1.6, Not required
11	WCDMA V + WLAN (NII)	Head	Right Cheek	1.01	0.46	1.47	Σ SAR < 1.6, Not required
			Right Tilted	0.87	0.41	1.28	Σ SAR < 1.6, Not required
			Left Cheek	0.82	0.31	1.13	Σ SAR < 1.6, Not required
			Left Tilted	0.70	0.34	1.04	Σ SAR < 1.6, Not required
		Body-Worn	Front Face	0.39	0.42	0.81	Σ SAR < 1.6, Not required
			Rear Face	0.35	0.29	0.64	Σ SAR < 1.6, Not required
		Hotspot	Front Face	0.91	0.36	**1.27**	Σ SAR < 1.6, Not required
			Rear Face	0.79	0.35	1.14	Σ SAR < 1.6, Not required
			Left Side	0.30	0.15	0.45	Σ SAR < 1.6, Not required
			Right Side	0.12	0.00	0.12	Σ SAR < 1.6, Not required
			Top Side	0.49	0.24	0.73	Σ SAR < 1.6, Not required
			Bottom Side	0.19	0.00	0.19	Σ SAR < 1.6, Not required
12	WCDMA V + BT (DSS)	Body-Worn	Front Face	0.39	0.02	0.41	Σ SAR < 1.6, Not required
			Rear Face	0.35	0.03	0.38	Σ SAR < 1.6, Not required

No.	Conditions (SAR1 + SAR2)	Exposure Condition	Test Position	Max. SAR1	Max. SAR2	SAR Summation	SPLSR Analysis
13	LTE 2 + WLAN (DTS)	Head	Right Cheek	0.79	0.33	1.12	Σ SAR < 1.6, Not required
			Right Tilted	0.76	0.27	1.03	Σ SAR < 1.6, Not required
			Left Cheek	0.90	0.11	1.01	Σ SAR < 1.6, Not required
			Left Tilted	0.79	0.12	0.91	Σ SAR < 1.6, Not required
		Body-Worn	Front Face	0.47	0.16	0.63	Σ SAR < 1.6, Not required
			Rear Face	0.40	0.20	0.60	Σ SAR < 1.6, Not required
		Hotspot	Front Face	0.72	0.31	1.03	Σ SAR < 1.6, Not required
			Rear Face	0.62	0.38	1.00	Σ SAR < 1.6, Not required
			Left Side	0.08	0.17	0.25	Σ SAR < 1.6, Not required
			Right Side	0.16	0.00	0.16	Σ SAR < 1.6, Not required
			Top Side	0.39	0.23	0.62	Σ SAR < 1.6, Not required
			Bottom Side	1.04	0.00	1.04	Σ SAR < 1.6, Not required
14	LTE 2 + WLAN (NII)	Head	Right Cheek	0.79	0.46	1.25	Σ SAR < 1.6, Not required
			Right Tilted	0.76	0.41	1.17	Σ SAR < 1.6, Not required
			Left Cheek	0.90	0.31	1.21	Σ SAR < 1.6, Not required
			Left Tilted	0.79	0.34	1.13	Σ SAR < 1.6, Not required
		Body-Worn	Front Face	0.47	0.42	0.89	Σ SAR < 1.6, Not required
			Rear Face	0.40	0.29	0.69	Σ SAR < 1.6, Not required
		Hotspot	Front Face	0.72	0.36	1.08	Σ SAR < 1.6, Not required
			Rear Face	0.62	0.35	0.97	Σ SAR < 1.6, Not required
			Left Side	0.08	0.15	0.23	Σ SAR < 1.6, Not required
			Right Side	0.16	0.00	0.16	Σ SAR < 1.6, Not required
			Top Side	0.39	0.24	0.63	Σ SAR < 1.6, Not required
			Bottom Side	1.04	0.00	1.04	Σ SAR < 1.6, Not required
15	LTE 2 + BT (DSS)	Body-Worn	Front Face	0.47	0.02	0.49	Σ SAR < 1.6, Not required
			Rear Face	0.40	0.03	0.43	Σ SAR < 1.6, Not required

No.	Conditions (SAR1 + SAR2)	Exposure Condition	Test Position	Max. SAR1	Max. SAR2	SAR Summation	SPLSR Analysis
16	LTE 5 + WLAN (DTS)	Head	Right Cheek	1.06	0.33	1.39	Σ SAR < 1.6, Not required
			Right Tilted	0.93	0.27	1.20	Σ SAR < 1.6, Not required
			Left Cheek	0.91	0.11	1.02	Σ SAR < 1.6, Not required
			Left Tilted	0.74	0.12	0.86	Σ SAR < 1.6, Not required
		Body-Worn	Front Face	0.45	0.16	0.61	Σ SAR < 1.6, Not required
			Rear Face	0.39	0.20	0.59	Σ SAR < 1.6, Not required
		Hotspot	Front Face	0.75	0.31	1.06	Σ SAR < 1.6, Not required
			Rear Face	0.65	0.38	1.03	Σ SAR < 1.6, Not required
			Left Side	0.26	0.17	0.43	Σ SAR < 1.6, Not required
			Right Side	0.19	0.00	0.19	Σ SAR < 1.6, Not required
			Top Side	0.01	0.23	0.24	Σ SAR < 1.6, Not required
			Bottom Side	0.24	0.00	0.24	Σ SAR < 1.6, Not required
17	LTE 5 + WLAN (NII)	Head	Right Cheek	1.06	0.46	1.52	Σ SAR < 1.6, Not required
			Right Tilted	0.93	0.41	1.34	Σ SAR < 1.6, Not required
			Left Cheek	0.91	0.31	1.22	Σ SAR < 1.6, Not required
			Left Tilted	0.74	0.34	1.08	Σ SAR < 1.6, Not required
		Body-Worn	Front Face	0.45	0.42	0.87	Σ SAR < 1.6, Not required
			Rear Face	0.39	0.29	0.68	Σ SAR < 1.6, Not required
		Hotspot	Front Face	0.75	0.36	1.11	Σ SAR < 1.6, Not required
			Rear Face	0.65	0.35	1.00	Σ SAR < 1.6, Not required
			Left Side	0.26	0.15	0.41	Σ SAR < 1.6, Not required
			Right Side	0.19	0.00	0.19	Σ SAR < 1.6, Not required
			Top Side	0.01	0.24	0.25	Σ SAR < 1.6, Not required
			Bottom Side	0.24	0.00	0.24	Σ SAR < 1.6, Not required
18	LTE 5 + BT (DSS)	Body-Worn	Front Face	0.45	0.02	0.47	Σ SAR < 1.6, Not required
			Rear Face	0.39	0.03	0.42	Σ SAR < 1.6, Not required

No.	Conditions (SAR1 + SAR2)	Exposure Condition	Test Position	Max. SAR1	Max. SAR2	SAR Summation	SPLSR Analysis
19	LTE 7 + WLAN (DTS)	Head	Right Cheek	0.07	0.33	0.40	Σ SAR < 1.6, Not required
			Right Tilted	0.05	0.27	0.32	Σ SAR < 1.6, Not required
			Left Cheek	0.12	0.11	0.23	Σ SAR < 1.6, Not required
			Left Tilted	0.00	0.12	0.12	Σ SAR < 1.6, Not required
		Body-Worn	Front Face	0.31	0.16	0.47	Σ SAR < 1.6, Not required
			Rear Face	0.40	0.20	0.60	Σ SAR < 1.6, Not required
		Hotspot	Front Face	0.48	0.31	0.79	Σ SAR < 1.6, Not required
			Rear Face	0.62	0.38	1.00	Σ SAR < 1.6, Not required
			Left Side	0.29	0.17	0.46	Σ SAR < 1.6, Not required
			Right Side	0.11	0.00	0.11	Σ SAR < 1.6, Not required
			Top Side	0.00	0.23	0.23	Σ SAR < 1.6, Not required
			Bottom Side	1.18	0.00	1.18	Σ SAR < 1.6, Not required
20	LTE 7 + WLAN (NII)	Head	Right Cheek	0.07	0.46	0.53	Σ SAR < 1.6, Not required
			Right Tilted	0.05	0.41	0.46	Σ SAR < 1.6, Not required
			Left Cheek	0.12	0.31	0.43	Σ SAR < 1.6, Not required
			Left Tilted	0.00	0.34	0.34	Σ SAR < 1.6, Not required
		Body-Worn	Front Face	0.31	0.42	0.73	Σ SAR < 1.6, Not required
			Rear Face	0.40	0.29	0.69	Σ SAR < 1.6, Not required
		Hotspot	Front Face	0.48	0.36	0.84	Σ SAR < 1.6, Not required
			Rear Face	0.62	0.35	0.97	Σ SAR < 1.6, Not required
			Left Side	0.29	0.15	0.44	Σ SAR < 1.6, Not required
			Right Side	0.11	0.00	0.11	Σ SAR < 1.6, Not required
			Top Side	0.00	0.24	0.24	Σ SAR < 1.6, Not required
			Bottom Side	1.18	0.00	1.18	Σ SAR < 1.6, Not required
21	LTE 7 + BT (DSS)	Body-Worn	Front Face	0.31	0.02	0.33	Σ SAR < 1.6, Not required
			Rear Face	0.40	0.03	0.43	Σ SAR < 1.6, Not required

No.	Conditions (SAR1 + SAR2)	Exposure Condition	Test Position	Max. SAR1	Max. SAR2	SAR Summation	SPLSR Analysis
22	LTE 26 + WLAN (DTS)	Head	Right Cheek	1.07	0.33	1.40	Σ SAR < 1.6, Not required
			Right Tilted	0.95	0.27	1.22	Σ SAR < 1.6, Not required
			Left Cheek	0.91	0.11	1.02	Σ SAR < 1.6, Not required
			Left Tilted	0.71	0.12	0.83	Σ SAR < 1.6, Not required
		Body-Worn	Front Face	0.41	0.16	0.57	Σ SAR < 1.6, Not required
			Rear Face	0.34	0.20	0.54	Σ SAR < 1.6, Not required
		Hotspot	Front Face	0.79	0.31	1.10	Σ SAR < 1.6, Not required
			Rear Face	0.67	0.38	1.05	Σ SAR < 1.6, Not required
			Left Side	0.27	0.17	0.44	Σ SAR < 1.6, Not required
			Right Side	0.21	0.00	0.21	Σ SAR < 1.6, Not required
			Top Side	0.35	0.23	0.58	Σ SAR < 1.6, Not required
			Bottom Side	0.31	0.00	0.31	Σ SAR < 1.6, Not required
23	LTE 26 + WLAN (NII)	Head	Right Cheek	1.07	0.46	1.53	Σ SAR < 1.6, Not required
			Right Tilted	0.95	0.41	1.36	Σ SAR < 1.6, Not required
			Left Cheek	0.91	0.31	1.22	Σ SAR < 1.6, Not required
			Left Tilted	0.71	0.34	1.05	Σ SAR < 1.6, Not required
		Body-Worn	Front Face	0.41	0.42	0.83	Σ SAR < 1.6, Not required
			Rear Face	0.34	0.29	0.63	Σ SAR < 1.6, Not required
		Hotspot	Front Face	0.79	0.36	1.15	Σ SAR < 1.6, Not required
			Rear Face	0.67	0.35	1.02	Σ SAR < 1.6, Not required
			Left Side	0.27	0.15	0.42	Σ SAR < 1.6, Not required
			Right Side	0.21	0.00	0.21	Σ SAR < 1.6, Not required
			Top Side	0.35	0.24	0.59	Σ SAR < 1.6, Not required
			Bottom Side	0.31	0.00	0.31	Σ SAR < 1.6, Not required
24	LTE 26 + BT (DSS)	Body-Worn	Front Face	0.41	0.02	0.43	Σ SAR < 1.6, Not required
			Rear Face	0.34	0.03	0.37	Σ SAR < 1.6, Not required

No.	Conditions (SAR1 + SAR2)	Exposure Condition	Test Position	Max. SAR1	Max. SAR2	SAR Summation	SPLSR Analysis
25	LTE 41 + WLAN (DTS)	Head	Right Cheek	0.05	0.33	0.38	Σ SAR < 1.6, Not required
			Right Tilted	0.00	0.27	0.27	Σ SAR < 1.6, Not required
			Left Cheek	0.05	0.11	0.16	Σ SAR < 1.6, Not required
			Left Tilted	0.00	0.12	0.12	Σ SAR < 1.6, Not required
		Body-Worn	Front Face	0.16	0.16	0.32	Σ SAR < 1.6, Not required
			Rear Face	0.23	0.20	0.43	Σ SAR < 1.6, Not required
		Hotspot	Front Face	0.35	0.31	0.66	Σ SAR < 1.6, Not required
			Rear Face	0.53	0.38	0.91	Σ SAR < 1.6, Not required
			Left Side	0.23	0.17	0.40	Σ SAR < 1.6, Not required
			Right Side	0.09	0.00	0.09	Σ SAR < 1.6, Not required
			Top Side	0.00	0.23	0.23	Σ SAR < 1.6, Not required
			Bottom Side	0.75	0.00	0.75	Σ SAR < 1.6, Not required
26	LTE 41 + WLAN (NII)	Head	Right Cheek	0.05	0.46	0.51	Σ SAR < 1.6, Not required
			Right Tilted	0.00	0.41	0.41	Σ SAR < 1.6, Not required
			Left Cheek	0.05	0.31	0.36	Σ SAR < 1.6, Not required
			Left Tilted	0.00	0.34	0.34	Σ SAR < 1.6, Not required
		Body-Worn	Front Face	0.16	0.42	0.58	Σ SAR < 1.6, Not required
			Rear Face	0.23	0.29	0.52	Σ SAR < 1.6, Not required
		Hotspot	Front Face	0.35	0.36	0.71	Σ SAR < 1.6, Not required
			Rear Face	0.53	0.35	0.88	Σ SAR < 1.6, Not required
			Left Side	0.23	0.15	0.38	Σ SAR < 1.6, Not required
			Right Side	0.09	0.00	0.09	Σ SAR < 1.6, Not required
			Top Side	0.00	0.24	0.24	Σ SAR < 1.6, Not required
			Bottom Side	0.75	0.00	0.75	Σ SAR < 1.6, Not required
27	LTE 41 + BT (DSS)	Body-Worn	Front Face	0.16	0.02	0.18	Σ SAR < 1.6, Not required
			Rear Face	0.23	0.03	0.26	Σ SAR < 1.6, Not required

Test Engineer： Eric Wu, and Chienlun Huang

5. Calibration of Test Equipment

Equipment	Manufacturer	Model	SN	Cal. Date	Cal. Interval
System Validation Dipole	SPEAG	D835V2	4d121	Aug. 25, 2016	1 Year
System Validation Dipole	SPEAG	D835V2	4d092	Jun. 28, 2017	1 Year
System Validation Dipole	SPEAG	D1900V2	5d036	Jan. 23, 2017	1 Year
System Validation Dipole	SPEAG	D2450V2	737	Aug. 26, 2016	1 Year
System Validation Dipole	SPEAG	D2450V2	869	Jun. 21, 2016	1 Year
System Validation Dipole	SPEAG	D2600V2	1020	Aug. 26, 2016	1 Year
System Validation Dipole	SPEAG	D2600V2	1058	Jun. 27, 2017	1 Year
System Validation Dipole	SPEAG	D5GHzV2	1019	Aug. 23, 2016	1 Year
System Validation Dipole	SPEAG	D5GHzV2	1203	Dec. 16, 2016	1 Year
Dosimetric E-Field Probe	SPEAG	ET3DV6	1790	May. 24, 2017	1 Year
Dosimetric E-Field Probe	SPEAG	EX3DV4	3650	Jul. 25, 2016	1 Year
Dosimetric E-Field Probe	SPEAG	EX3DV4	3971	Mar. 24, 2017	1 Year
Dosimetric E-Field Probe	SPEAG	EX3DV4	3753	May. 05, 2017	1 Year
Dosimetric E-Field Probe	SPEAG	EX3DV4	7351	Dec. 20, 2016	1 Year
Dosimetric E-Field Probe	SPEAG	EX3DV4	7375	Dec. 08, 2016	1 Year
Data Acquisition Electronics	SPEAG	DAE3	579	Sep. 05, 2016	1 Year
Data Acquisition Electronics	SPEAG	DAE4	861	May. 22, 2017	1 Year
Data Acquisition Electronics	SPEAG	DAE4	916	Dec. 15, 2016	1 Year
Data Acquisition Electronics	SPEAG	DAE4	917	Jan. 06, 2017	1 Year
Data Acquisition Electronics	SPEAG	DAE4	1277	Jul. 20, 2017	1 Year
Data Acquisition Electronics	SPEAG	DAE4	1431	Mar. 20, 2017	1 Year
Spectrum Analyzer	R&S	FSL6	102006	Mar. 27, 2017	1 Year
ENA Series Network Analyzer	Agilent	E5071C	MY46214281	Jun. 09, 2017	1 Year
MXG Analong Signal Generator	Agilent	N5181A	MY50143868	Jul. 10, 2017	1 Year
Vector Signal Generator	Anritsu	MG3710A	6201599977	Mar. 27, 2017	1 Year
Power Meter	Anritsu	ML2495A	1218009	Jul. 12, 2017	1 Year
Power Sensor	Anritsu	MA2411B	1207252	Jul. 12, 2017	1 Year
Thermometer	YFE	YF-160A	130504591	Mar. 24, 2017	1 Year
Power Amplifier	AR	5S1G4	0339656	Sep. 21, 2016	1 Year
Power Amplifier	mini-circuits	ZVE-8G	05770420A	Sep. 21, 2016	1 Year
Attenuator	MTJ	MTJ6011-03	N/A	Sep. 21, 2016	1 Year
Attenuator	Woken	00800A1G01L-10	N/A	Sep. 21, 2016	1 Year
Directional Coupler	Woken	0110A05602O-10	11122702	Sep. 21, 2016	1 Year
Thermometer	YFE	YF-160A	120702365	Aug. 15, 2017	1 Year
Thermometer	YFE	YF-160A	120702369	Aug. 15, 2017	1 Year
Twin SAM Phantom	SPEAG	QD 000 P40 CB	1485	N/A	N/A
Twin SAM Phantom	SPEAG	QD 000 P40 CD	1652	N/A	N/A
Twin SAM Phantom	SPEAG	QD 000 P40 CD	1823	N/A	N/A
Twin SAM Phantom	SPEAG	QD000 P40 CA	1127	N/A	N/A

6. Measurement Uncertainty

Source of Uncertainty	Uncertainty (± %)	Probability Distribution	Divisor	Ci (1g)	Ci (10g)	Standard Uncertainty (± %, 1g)	Standard Uncertainty (± %, 10g)	Vi
Measurement System								
Probe Calibration	6.0	Normal	1	1	1	6.0	6.0	∞
Axial Isotropy	4.7	Rectangular	√3	√0.5	√0.5	1.9	1.9	∞
Hemispherical Isotropy	9.6	Rectangular	√3	√0.5	√0.5	3.9	3.9	∞
Boundary Effect	1.0	Rectangular	√3	1	1	0.6	0.6	∞
Linearity	4.7	Rectangular	√3	1	1	2.7	2.7	∞
Detection Limits	0.25	Rectangular	√3	1	1	0.14	0.14	∞
Probe Modulation Response	3.5	Rectangular	√3	1	1	2.0	2.0	∞
Readout Electronics	0.3	Normal	1	1	1	0.3	0.3	∞
Response Time	0.0	Rectangular	√3	1	1	0.0	0.0	∞
Integration Time	1.7	Rectangular	√3	1	1	1.0	1.0	∞
RF Ambient Conditions – Noise	3.0	Rectangular	√3	1	1	1.7	1.7	∞
RF Ambient Conditions – Reflections	3.0	Rectangular	√3	1	1	1.7	1.7	∞
Probe Positioner Mechanical Tolerance	0.4	Rectangular	√3	1	1	0.2	0.2	∞
Probe Positioning with Respect to Phantom	2.9	Rectangular	√3	1	1	1.7	1.7	∞
Post-processing	2.0	Rectangular	√3	1	1	1.2	1.2	∞
Test Sample Related								
Test Sample Positioning	3.9 / 2.06	Normal	1	1	1	3.9	2.1	35
Device Holder Uncertainty	2.9 / 4.1	Normal	1	1	1	2.9	4.1	11
Power Drift of Measurement	5.0	Rectangular	√3	1	1	2.9	2.9	∞
Power Scaling	0.0	Rectangular	√3	1	1	0.0	0.0	∞
Phantom and Setup								
Phantom Uncertainty (Shape and Thickness Tolerances)	6.1	Rectangular	√3	1	1	3.5	3.5	∞
Liquid Conductivity (Temperature Uncertainty)	3.24	Rectangular	√3	0.78	0.71	1.5	1.3	∞
Liquid Conductivity (Measured)	2.88	Normal	1	0.78	0.71	2.2	2.0	43
Liquid Permittivity (Temperature Uncertainty)	1.13	Rectangular	√3	0.23	0.26	0.2	0.2	∞
Liquid Permittivity (Measured)	2.50	Normal	1	0.23	0.26	0.6	0.7	54
Combined Standard Uncertainty						± 11.4 %	± 11.2 %	
Expanded Uncertainty (K=2)						**± 22.8 %**	**± 22.4 %**	

Head SAR Uncertainty Budget for Frequency Range of 300 MHz to 3 GHz

Source of Uncertainty	Uncertainty (± %)	Probability Distribution	Divisor	Ci (1g)	Ci (10g)	Standard Uncertainty (± %, 1g)	Standard Uncertainty (± %, 10g)	Vi
Measurement System								
Probe Calibration	6.55	Normal	1	1	1	6.55	6.55	∞
Axial Isotropy	4.7	Rectangular	√3	0.7	0.7	1.9	1.9	∞
Hemispherical Isotropy	9.6	Rectangular	√3	0.7	0.7	3.9	3.9	∞
Boundary Effect	2.0	Rectangular	√3	1	1	1.2	1.2	∞
Linearity	4.7	Rectangular	√3	1	1	2.7	2.7	∞
Detection Limits	0.25	Rectangular	√3	1	1	0.14	0.14	∞
Probe Modulation Response	3.5	Rectangular	√3	1	1	2.0	2.0	∞
Readout Electronics	0.3	Normal	1	1	1	0.3	0.3	∞
Response Time	0.0	Rectangular	√3	1	1	0.0	0.0	∞
Integration Time	1.7	Rectangular	√3	1	1	1.0	1.0	∞
RF Ambient Conditions – Noise	3.0	Rectangular	√3	1	1	1.7	1.7	∞
RF Ambient Conditions – Reflections	3.0	Rectangular	√3	1	1	1.7	1.7	∞
Probe Positioner Mechanical Tolerance	0.4	Rectangular	√3	1	1	0.2	0.2	∞
Probe Positioning with Respect to Phantom	6.7	Rectangular	√3	1	1	3.9	3.9	∞
Post-processing	4.0	Rectangular	√3	1	1	2.3	2.3	∞
Test Sample Related								
Test Sample Positioning	3.9 / 2.06	Normal	1	1	1	3.9	2.1	35
Device Holder Uncertainty	2.9 / 4.1	Normal	1	1	1	2.9	4.1	11
Power Drift of Measurement	5.0	Rectangular	√3	1	1	2.9	2.9	∞
Power Scaling	0.0	Rectangular	√3	1	1	0.0	0.0	∞
Phantom and Setup								
Phantom Uncertainty (Shape and Thickness Tolerances)	6.6	Rectangular	√3	1	1	3.8	3.8	∞
Liquid Conductivity (Temperature Uncertainty)	3.24	Rectangular	√3	0.78	0.71	1.5	1.3	∞
Liquid Conductivity (Measured)	2.88	Normal	1	0.78	0.71	2.2	2.0	43
Liquid Permittivity (Temperature Uncertainty)	1.13	Rectangular	√3	0.23	0.26	0.2	0.2	∞
Liquid Permittivity (Measured)	2.50	Normal	1	0.23	0.26	0.6	0.7	54
Combined Standard Uncertainty						± 12.5 %	± 12.3 %	
Expanded Uncertainty (K=2)						**± 25.0 %**	**± 24.6 %**	

Head SAR Uncertainty Budget for Frequency Range of 3 GHz to 6 GHz

Source of Uncertainty	Uncertainty (± %)	Probability Distribution	Divisor	Ci (1g)	Ci (10g)	Standard Uncertainty (± %, 1g)	Standard Uncertainty (± %, 10g)	Vi
Measurement System								
Probe Calibration	6.0	Normal	1	1	1	6.0	6.0	∞
Axial Isotropy	4.7	Rectangular	√3	√0.5	√0.5	1.9	1.9	∞
Hemispherical Isotropy	9.6	Rectangular	√3	√0.5	√0.5	3.9	3.9	∞
Boundary Effect	1.0	Rectangular	√3	1	1	0.6	0.6	∞
Linearity	4.7	Rectangular	√3	1	1	2.7	2.7	∞
Detection Limits	0.25	Rectangular	√3	1	1	0.14	0.14	∞
Probe Modulation Response	3.5	Rectangular	√3	1	1	2.0	2.0	∞
Readout Electronics	0.3	Normal	1	1	1	0.3	0.3	∞
Response Time	0.0	Rectangular	√3	1	1	0.0	0.0	∞
Integration Time	1.7	Rectangular	√3	1	1	1.0	1.0	∞
RF Ambient Conditions – Noise	3.0	Rectangular	√3	1	1	1.7	1.7	∞
RF Ambient Conditions – Reflections	3.0	Rectangular	√3	1	1	1.7	1.7	∞
Probe Positioner Mechanical Tolerance	0.4	Rectangular	√3	1	1	0.2	0.2	∞
Probe Positioning with Respect to Phantom	2.9	Rectangular	√3	1	1	1.7	1.7	∞
Post-processing	2.0	Rectangular	√3	1	1	1.2	1.2	∞
Test Sample Related								
Test Sample Positioning	4.38 / 1.35	Normal	1	1	1	4.4	1.4	29
Device Holder Uncertainty	2.9 / 4.1	Normal	1	1	1	2.9	4.1	11
Power Drift of Measurement	5.0	Rectangular	√3	1	1	2.9	2.9	∞
Power Scaling	0.0	Rectangular	√3	1	1	0.0	0.0	∞
Phantom and Setup								
Phantom Uncertainty (Shape and Thickness Tolerances)	7.2	Rectangular	√3	1	1	4.2	4.2	∞
Liquid Conductivity (Temperature Uncertainty)	3.24	Rectangular	√3	0.78	0.71	1.5	1.3	∞
Liquid Conductivity (Measured)	2.88	Normal	1	0.78	0.71	2.2	2.0	43
Liquid Permittivity (Temperature Uncertainty)	1.13	Rectangular	√3	0.23	0.26	0.2	0.2	∞
Liquid Permittivity (Measured)	2.50	Normal	1	0.23	0.26	0.6	0.7	54
Combined Standard Uncertainty						± 11.8 %	± 11.3 %	
Expanded Uncertainty (K=2)						**± 23.6 %**	**± 22.6 %**	

Body SAR Uncertainty Budget for Frequency Range of 300 MHz to 3 GHz

Source of Uncertainty	Uncertainty (± %)	Probability Distribution	Divisor	Ci (1g)	Ci (10g)	Standard Uncertainty (± %, 1g)	Standard Uncertainty (± %, 10g)	Vi
Measurement System								
Probe Calibration	6.55	Normal	1	1	1	6.55	6.55	∞
Axial Isotropy	4.7	Rectangular	√3	0.7	0.7	1.9	1.9	∞
Hemispherical Isotropy	9.6	Rectangular	√3	0.7	0.7	3.9	3.9	∞
Boundary Effect	2.0	Rectangular	√3	1	1	1.2	1.2	∞
Linearity	4.7	Rectangular	√3	1	1	2.7	2.7	∞
Detection Limits	0.25	Rectangular	√3	1	1	0.14	0.14	∞
Probe Modulation Response	3.5	Rectangular	√3	1	1	2.0	2.0	∞
Readout Electronics	0.3	Normal	1	1	1	0.3	0.3	∞
Response Time	0.0	Rectangular	√3	1	1	0.0	0.0	∞
Integration Time	1.7	Rectangular	√3	1	1	1.0	1.0	∞
RF Ambient Conditions – Noise	3.0	Rectangular	√3	1	1	1.7	1.7	∞
RF Ambient Conditions – Reflections	3.0	Rectangular	√3	1	1	1.7	1.7	∞
Probe Positioner Mechanical Tolerance	0.4	Rectangular	√3	1	1	0.2	0.2	∞
Probe Positioning with Respect to Phantom	6.7	Rectangular	√3	1	1	3.9	3.9	∞
Post-processing	4.0	Rectangular	√3	1	1	2.3	2.3	∞
Test Sample Related								
Test Sample Positioning	4.38 / 1.35	Normal	1	1	1	4.4	1.4	29
Device Holder Uncertainty	2.9 / 4.1	Normal	1	1	1	2.9	4.1	11
Power Drift of Measurement	5.0	Rectangular	√3	1	1	2.9	2.9	∞
Power Scaling	0.0	Rectangular	√3	1	1	0.0	0.0	∞
Phantom and Setup								
Phantom Uncertainty (Shape and Thickness Tolerances)	7.6	Rectangular	√3	1	1	4.4	4.4	∞
Liquid Conductivity (Temperature Uncertainty)	3.24	Rectangular	√3	0.78	0.71	1.5	1.3	∞
Liquid Conductivity (Measured)	2.88	Normal	1	0.78	0.71	2.2	2.0	43
Liquid Permittivity (Temperature Uncertainty)	1.13	Rectangular	√3	0.23	0.26	0.2	0.2	∞
Liquid Permittivity (Measured)	2.50	Normal	1	0.23	0.26	0.6	0.7	54
Combined Standard Uncertainty						± 12.8 %	± 12.4 %	
Expanded Uncertainty (K=2)						**± 25.6 %**	**± 24.8 %**	

Body SAR Uncertainty Budget for Frequency Range of 3 GHz to 6 GHz

7. Information on the Testing Laboratories

We, Bureau Veritas Consumer Products Services (H.K.) Ltd., Taoyuan Branch, were founded in 1988 to provide our best service in EMC, Radio, Telecom and Safety consultation. Our laboratories are accredited and approved according to ISO/IEC 17025.

If you have any comments, please feel free to contact us at the following:

Taiwan HwaYa EMC/RF/Safety/Telecom Lab:
Add: No. 19, Hwa Ya 2nd Rd, Wen Hwa Vil., Kwei Shan Hsiang, Taoyuan Hsien 333, Taiwan, R.O.C.
Tel: 886-3-318-3232
Fax: 886-3-327-0892

Taiwan LinKo EMC/RF Lab:
Add: No. 47-2, 14th Ling, Chia Pau Vil., Linkou Dist., New Taipei City 244, Taiwan, R.O.C.
Tel: 886-2-2605-2180
Fax: 886-2-2605-1924

Taiwan HsinChu EMC/RF Lab:
Add: E-2, No.1, Li Hsin 1st Road, Hsinchu Science Park, Hsinchu City 30078, Taiwan, R.O.C.
Tel: 886-3-593-5343
Fax: 886-3-593-5342

Email: service.adt@tw.bureauveritas.com
Web Site: www.adt.com.tw

The road map of all our labs can be found in our web site also.

---END---

Appendix A. SAR Plots of System Verification

The plots for system verification with largest deviation for each SAR system combination are shown as follows.

System Check_H835_170802

DUT: Dipole 835 MHz; Type: D835V2; SN: 4d121

Communication System: CW; Frequency: 835 MHz;Duty Cycle: 1:1
Medium: H07T10N1_0802 Medium parameters used: f = 835 MHz; σ = 0.919 S/m; ε_r = 41.738; ρ = 1000 kg/m^3
Ambient Temperature：23.8 ℃ ; Liquid Temperature：23.4 ℃

DASY5 Configuration:
- Probe: EX3DV4 - SN3971; ConvF(10.67, 10.67, 10.67); Calibrated: 2017/03/24;
- Sensor-Surface: 1.4mm (Mechanical Surface Detection)
- Electronics: DAE3 Sn579; Calibrated: 2016/09/05
- Phantom: Twin SAM Phantom_1823; Type: QD000P40CD;
- Measurement SW: DASY52, Version 52.8 (8); SEMCAD X Version 14.6.10 (7373)

Pin=250mW/Area Scan (61x61x1): Interpolated grid: dx=1.500 mm, dy=1.500 mm
Maximum value of SAR (interpolated) = 2.97 W/kg

Pin=250mW/Zoom Scan (5x5x7)/Cube 0: Measurement grid: dx=8mm, dy=8mm, dz=5mm
Reference Value = 53.50 V/m; Power Drift = -0.05 dB
Peak SAR (extrapolated) = 3.36 W/kg
SAR(1 g) = 2.23 W/kg; SAR(10 g) = 1.47 W/kg
Maximum value of SAR (measured) = 2.98 W/kg

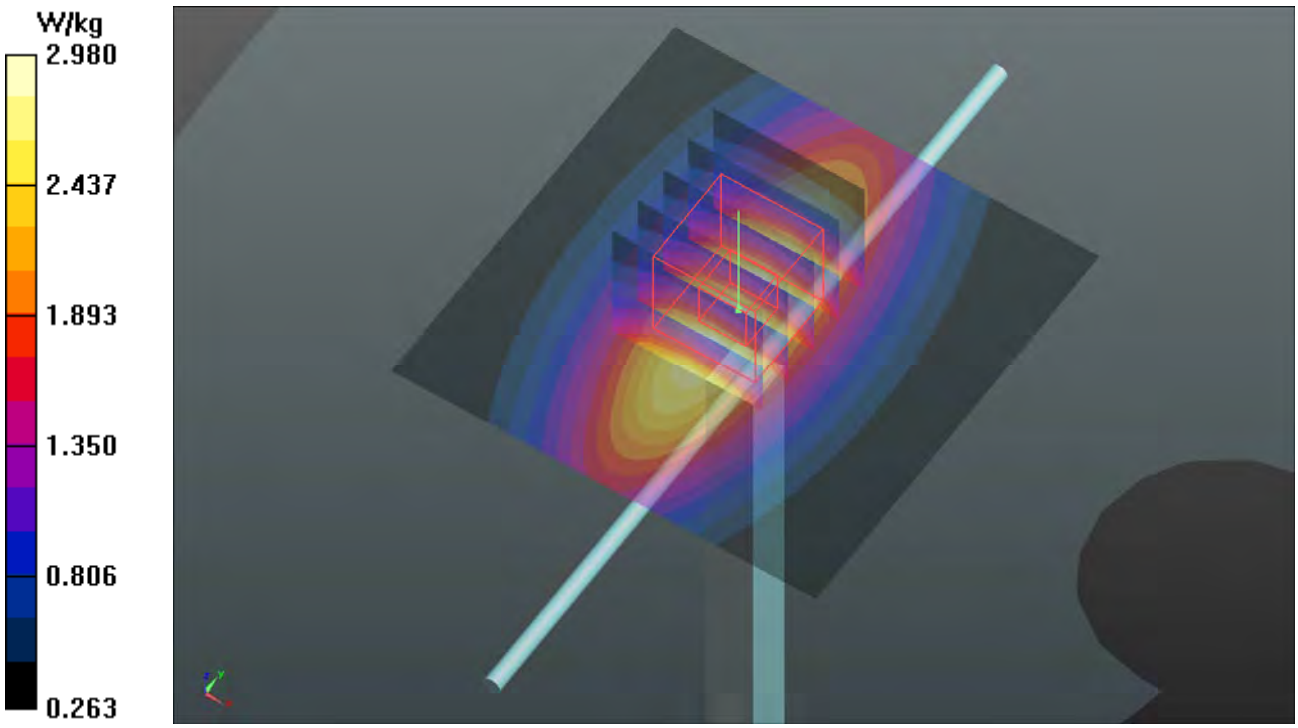

Test Laboratory: Bureau Veritas ADT SAR/HAC Testing Lab Date: 2017/09/08

System Check_H1900_170908

DUT: Dipole 1900 MHz; Type: D1900V2; SN: 5d036

Communication System: CW; Frequency: 1900 MHz;Duty Cycle: 1:1
Medium: H16T20N2_0908 Medium parameters used: f = 1900 MHz; σ = 1.461 S/m; ε_r = 38.975; ρ = 1000 kg/m^3
Ambient Temperature：23.3 ℃ ; Liquid Temperature：23.1 ℃

DASY5 Configuration:
- Probe: EX3DV4 - SN3650; ConvF(8.28, 8.28, 8.28); Calibrated: 2017/07/24;
- Sensor-Surface: 1.4mm (Mechanical Surface Detection)
- Electronics: DAE4 Sn1277; Calibrated: 2017/07/20
- Phantom: Twin SAM Phantom_1496; Type: QD000P40CA;
- Measurement SW: DASY52, Version 52.8 (8); SEMCAD X Version 14.6.10 (7373)

Pin=250mW/Area Scan (61x61x1): Interpolated grid: dx=1.500 mm, dy=1.500 mm
Maximum value of SAR (interpolated) = 17.0 W/kg

Pin=250mW/Zoom Scan (5x5x7)/Cube 0: Measurement grid: dx=8mm, dy=8mm, dz=5mm
Reference Value = 103.3 V/m; Power Drift = -0.02 dB
Peak SAR (extrapolated) = 20.1 W/kg
SAR(1 g) = 10.6 W/kg; SAR(10 g) = 5.49 W/kg
Maximum value of SAR (measured) = 16.8 W/kg

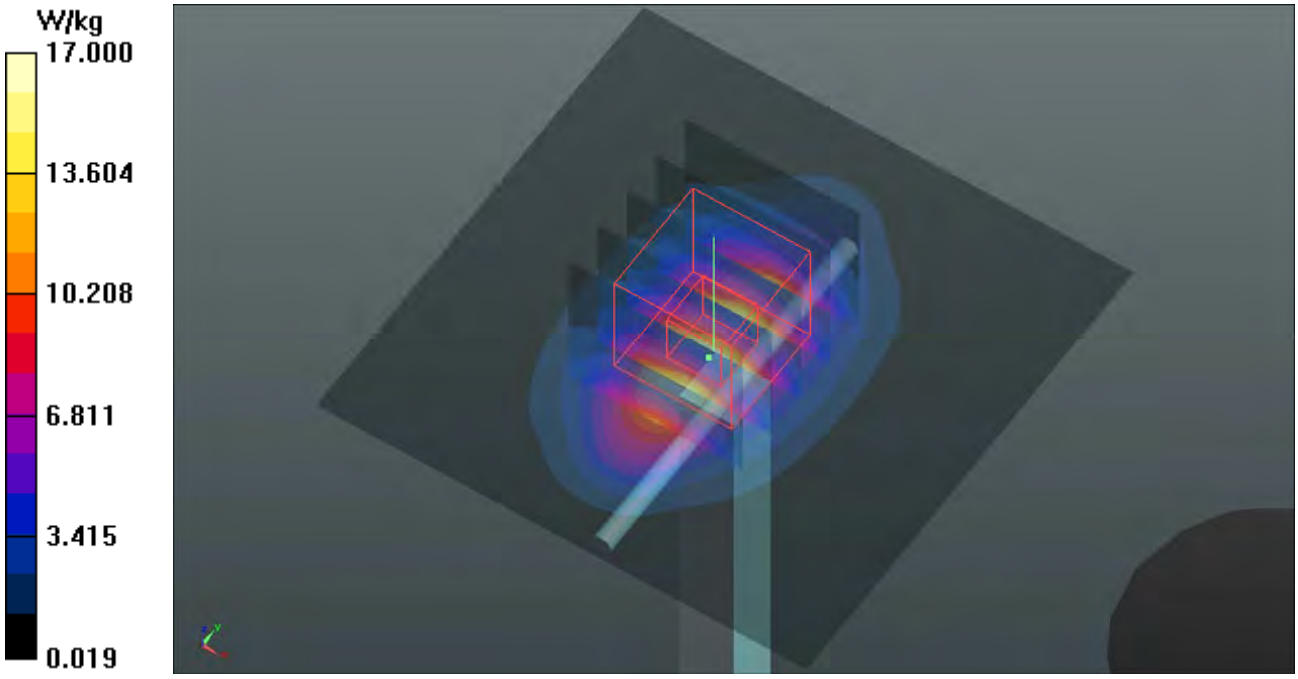

Test Laboratory: Bureau Veritas ADT SAR/HAC Testing Lab Date: 2017/07/13

System Check_H2450_170713

DUT: Dipole 2450 MHz; Type: D2450V2; SN: 737

Communication System: CW; Frequency: 2450 MHz;Duty Cycle: 1:1
Medium: H19T27N3_0713 Medium parameters used: f = 2450 MHz; σ = 1.890 S/m; ε_r = 39.974; ρ = 1000 kg/m^3
Ambient Temperature：23.9 ℃ ; Liquid Temperature：23.4 ℃

DASY5 Configuration:
- Probe: EX3DV4 - SN7351; ConvF(7.64, 7.64, 7.64); Calibrated: 2016/12/20;
- Sensor-Surface: 1.4mm (Mechanical Surface Detection)
- Electronics: DAE4 Sn1431; Calibrated: 2017/03/20
- Phantom: Twin SAM Phantom_1654; Type: QD000P40
- Measurement SW: DASY52, Version 52.8 (8); SEMCAD X Version 14.6.10 (7373)

Pin=250mW/Area Scan (81x81x1): Interpolated grid: dx=1.200 mm, dy=1.200 mm
Maximum value of SAR (interpolated) = 23.6 W/kg

Pin=250mW/Zoom Scan (7x7x7)/Cube 0: Measurement grid: dx=5mm, dy=5mm, dz=5mm
Reference Value = 107.2 V/m; Power Drift = -0.03 dB
Peak SAR (extrapolated) = 30.1 W/kg
SAR(1 g) = 13.7 W/kg; SAR(10 g) = 6.22 W/kg
Maximum value of SAR (measured) = 23.8 W/kg

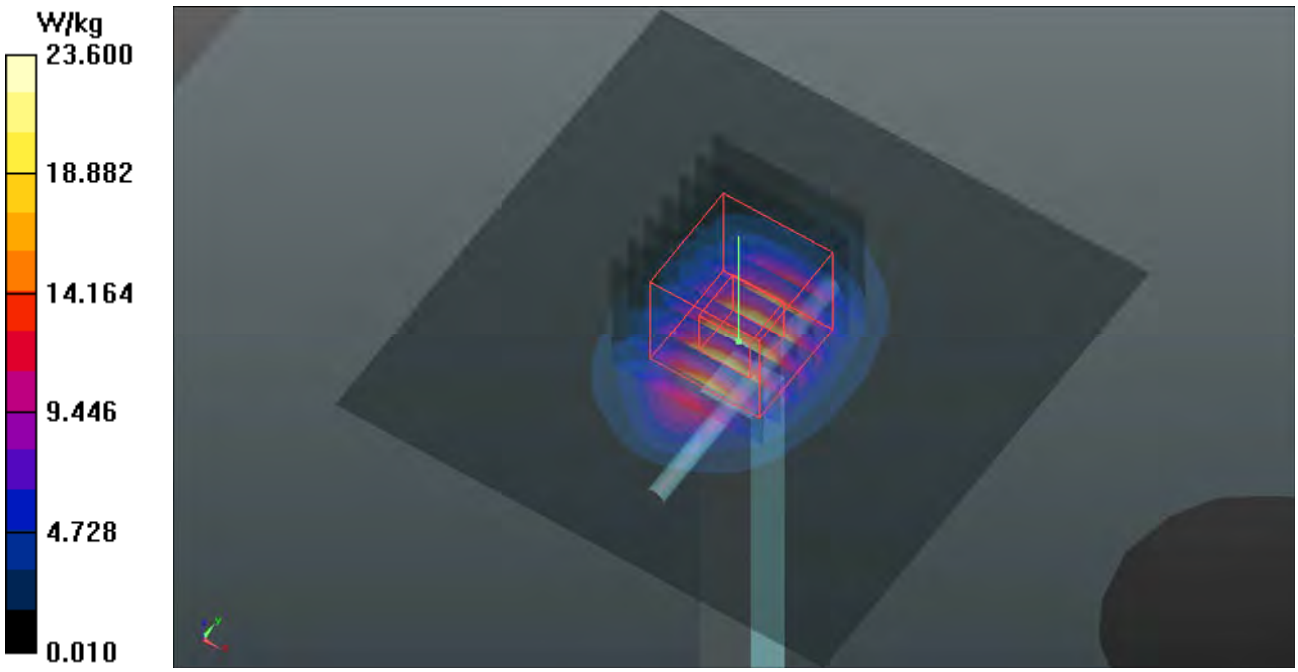

Test Laboratory: Bureau Veritas ADT SAR/HAC Testing Lab Date: 2017/08/23

System Check_H2600_170822

DUT: Dipole 2600 MHz; Type: D2600V2; SN: 1020

Communication System: CW; Frequency: 2600 MHz;Duty Cycle: 1:1
Medium: H19T27N1_0823 Medium parameters used: f = 2600 MHz; σ = 2.029 S/m; ε_r = 38.61; ρ = 1000 kg/m^3
Ambient Temperature：23.7 ℃ ; Liquid Temperature：23.2 ℃

DASY5 Configuration:
- Probe: EX3DV4 - SN7351; ConvF(7.43, 7.43, 7.43); Calibrated: 2016/12/20;
- Sensor-Surface: 1.4mm (Mechanical Surface Detection)
- Electronics: DAE4 Sn861; Calibrated: 2017/05/22
- Phantom: Twin SAM Phantom_1496; Type: QD000P40CA
- Measurement SW: DASY52, Version 52.8 (8); SEMCAD X Version 14.6.10 (7373)

Pin=250mW/Area Scan (81x81x1): Interpolated grid: dx=1.200 mm, dy=1.200 mm
Maximum value of SAR (interpolated) = 24.9 W/kg

Pin=250mW/Zoom Scan (7x7x7)/Cube 0: Measurement grid: dx=5mm, dy=5mm, dz=5mm
Reference Value = 104.4 V/m; Power Drift = 0.08 dB
Peak SAR (extrapolated) = 31.6 W/kg
SAR(1 g) = 14 W/kg; SAR(10 g) = 6.18 W/kg
Maximum value of SAR (measured) = 24.8 W/kg

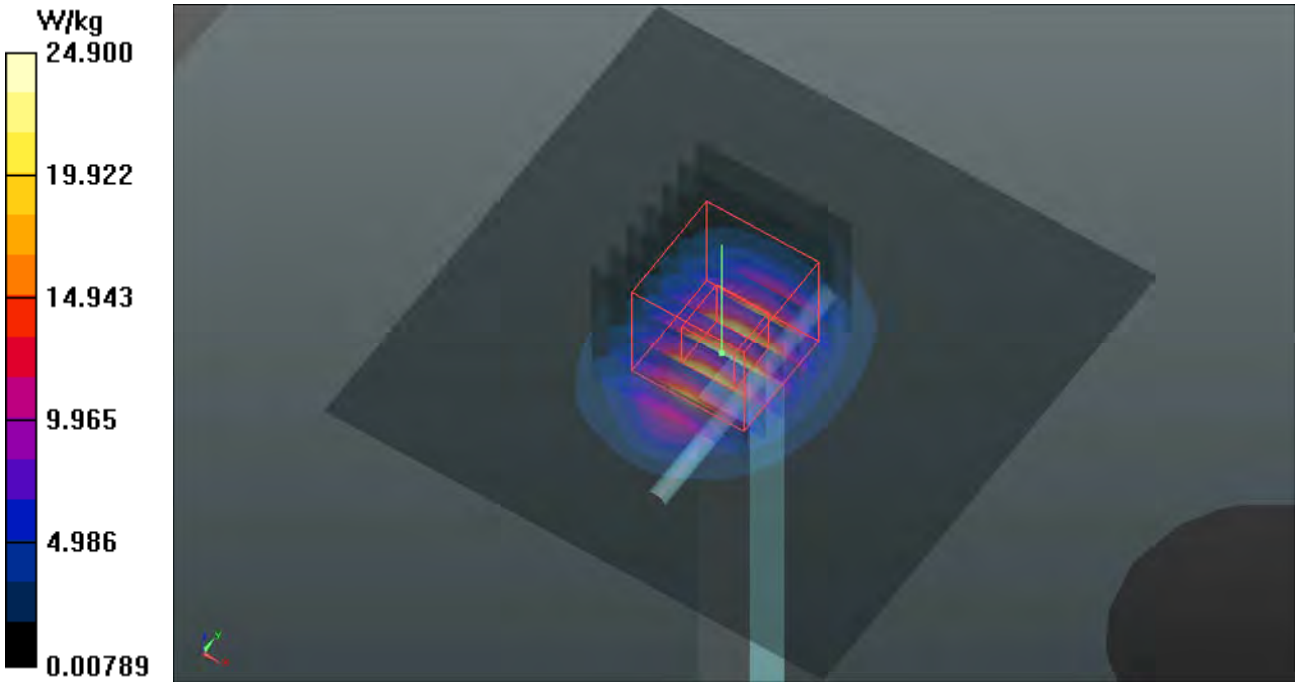

System Check_H5250_170713

DUT: Dipole 5 GHz; Type: D5GHzV2; SN: 1019

Communication System: CW; Frequency: 5250 MHz;Duty Cycle: 1:1
Medium: H34T60N2_0713 Medium parameters used: f = 5250 MHz; σ = 4.631 S/m; ε_r = 34.694; ρ = 1000 kg/m^3
Ambient Temperature：23.8 ℃ ; Liquid Temperature：23.2 ℃

DASY5 Configuration:
- Probe: EX3DV4 - SN3753; ConvF(5.25, 5.25, 5.25); Calibrated: 2017/05/05;
- Sensor-Surface: 1.4mm (Mechanical Surface Detection)
- Electronics: DAE4 Sn916; Calibrated: 2016/12/15
- Phantom: Twin SAM Phantom_1823; Type: QD000P40CD;
- Measurement SW: DASY52, Version 52.8 (8); SEMCAD X Version 14.6.10 (7373)

Pin=100mW/Area Scan (91x91x1): Interpolated grid: dx=1.000 mm, dy=1.000 mm
Maximum value of SAR (interpolated) = 15.1 W/kg

Pin=100mW/Zoom Scan (7x7x12)/Cube 0: Measurement grid: dx=4mm, dy=4mm, dz=2mm
Reference Value = 61.82 V/m; Power Drift = -0.17 dB
Peak SAR (extrapolated) = 33.9 W/kg
SAR(1 g) = 7.76 W/kg; SAR(10 g) = 2.2 W/kg
Maximum value of SAR (measured) = 16.2 W/kg

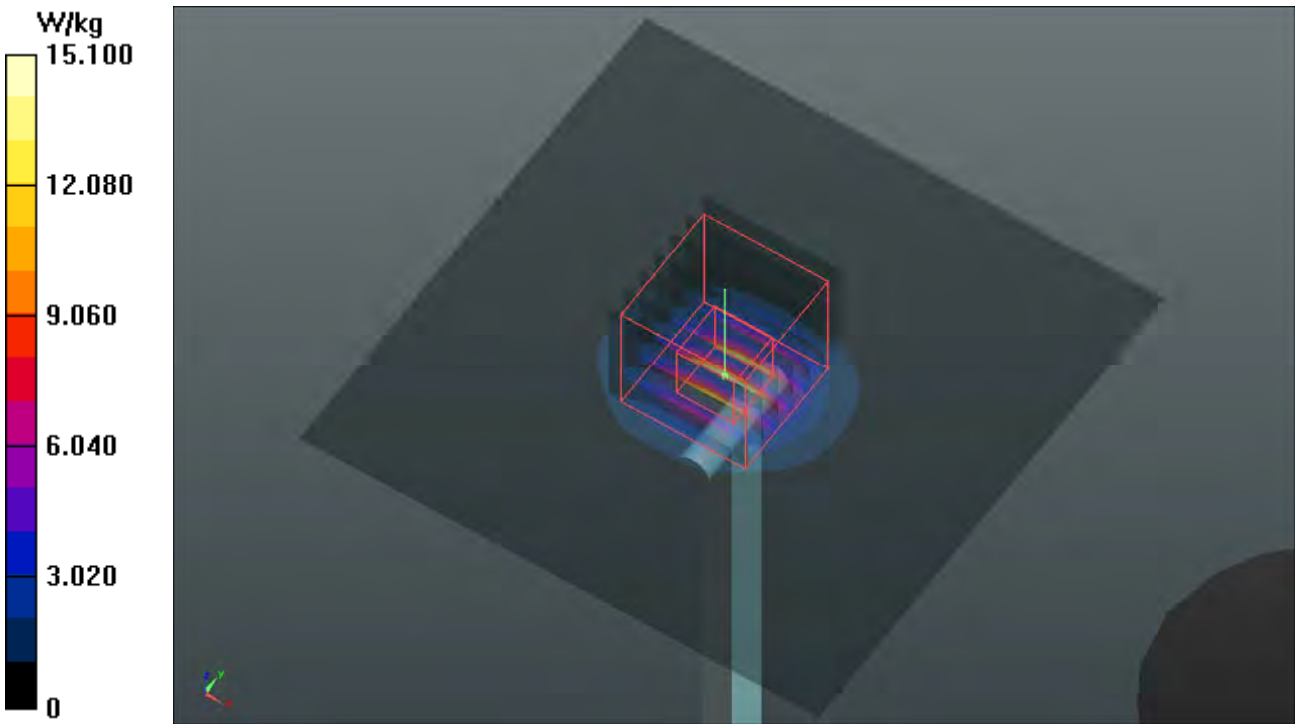

Test Laboratory: Bureau Veritas ADT SAR/HAC Testing Lab Date: 2017/07/13

System Check_H5600_170713

DUT: Dipole 5 GHz; Type: D5GHzV2; SN: 1019

Communication System: CW; Frequency: 5600 MHz;Duty Cycle: 1:1
Medium: H34T60N2_0713 Medium parameters used: f = 5600 MHz; σ = 4.964 S/m; ε_r = 34.172; ρ = 1000 kg/m^3
Ambient Temperature：23.8 ℃ ; Liquid Temperature：23.2 ℃

DASY5 Configuration:
- Probe: EX3DV4 - SN3753; ConvF(4.75, 4.75, 4.75); Calibrated: 2017/05/05;
- Sensor-Surface: 1.4mm (Mechanical Surface Detection)
- Electronics: DAE4 Sn916; Calibrated: 2016/12/15
- Phantom: Twin SAM Phantom_1823; Type: QD000P40CD;
- Measurement SW: DASY52, Version 52.8 (8); SEMCAD X Version 14.6.10 (7373)

Pin=100mW/Area Scan (91x91x1): Interpolated grid: dx=1.000 mm, dy=1.000 mm
Maximum value of SAR (interpolated) = 19.7 W/kg

Pin=100mW/Zoom Scan (7x7x12)/Cube 0: Measurement grid: dx=4mm, dy=4mm, dz=2mm
Reference Value = 72.33 V/m; Power Drift = -0.18 dB
Peak SAR (extrapolated) = 34.0 W/kg
SAR(1 g) = 8.1 W/kg; SAR(10 g) = 2.33 W/kg
Maximum value of SAR (measured) = 20.6 W/kg

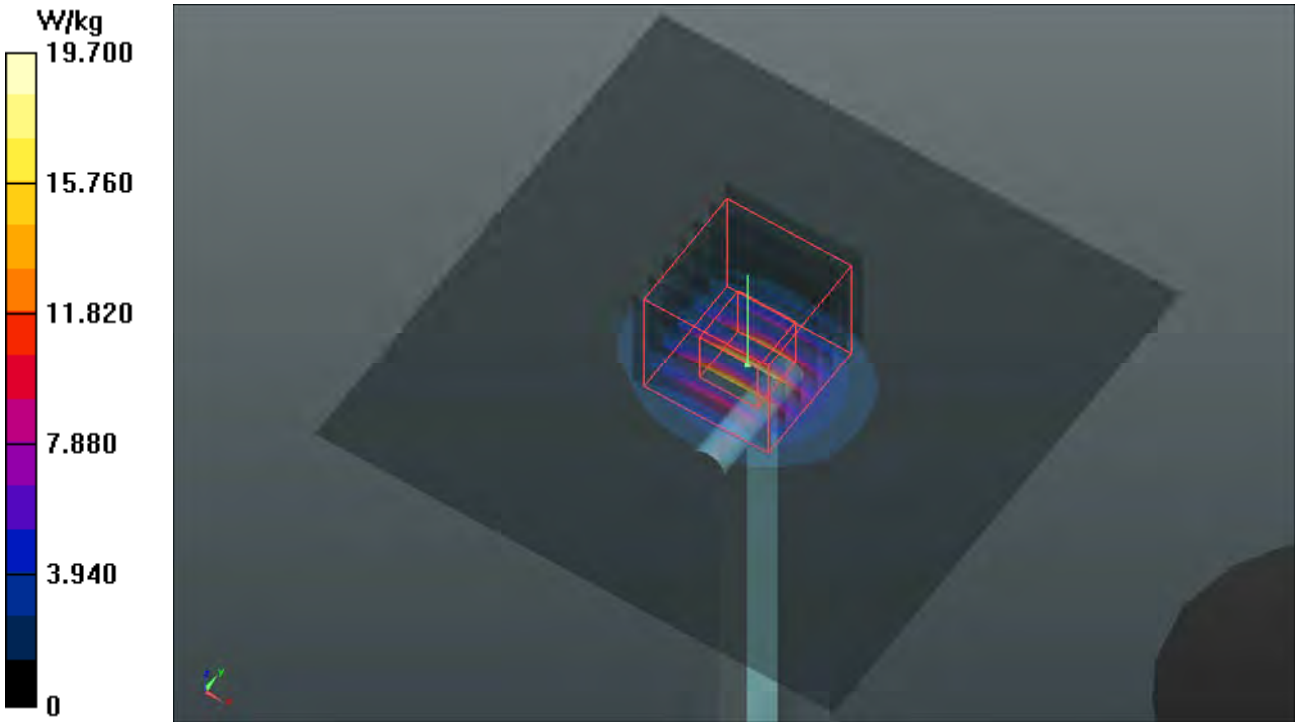

System Check_H5800_170713

DUT: Dipole 5 GHz; Type: D5GHzV2; SN: 1019

Communication System: CW; Frequency: 5800 MHz;Duty Cycle: 1:1
Medium: H34T60N2_0713 Medium parameters used: f = 5800 MHz; σ = 5.176 S/m; ε_r = 33.874; ρ = 1000 kg/m^3
Ambient Temperature：23.8 ℃ ; Liquid Temperature：23.2 ℃

DASY5 Configuration:
- Probe: EX3DV4 - SN3753; ConvF(4.76, 4.76, 4.76); Calibrated: 2017/05/05;
- Sensor-Surface: 1.4mm (Mechanical Surface Detection)
- Electronics: DAE4 Sn916; Calibrated: 2016/12/15
- Phantom: Twin SAM Phantom_1823; Type: QD000P40CD;
- Measurement SW: DASY52, Version 52.8 (8); SEMCAD X Version 14.6.10 (7373)

Pin=100mW/Area Scan (91x91x1): Interpolated grid: dx=1.000 mm, dy=1.000 mm
Maximum value of SAR (interpolated) = 19.7 W/kg

Pin=100mW/Zoom Scan (7x7x12)/Cube 0: Measurement grid: dx=4mm, dy=4mm, dz=2mm
Reference Value = 70.54 V/m; Power Drift = -0.10 dB
Peak SAR (extrapolated) = 35.7 W/kg
SAR(1 g) = 8.16 W/kg; SAR(10 g) = 2.33 W/kg
Maximum value of SAR (measured) = 21.0 W/kg

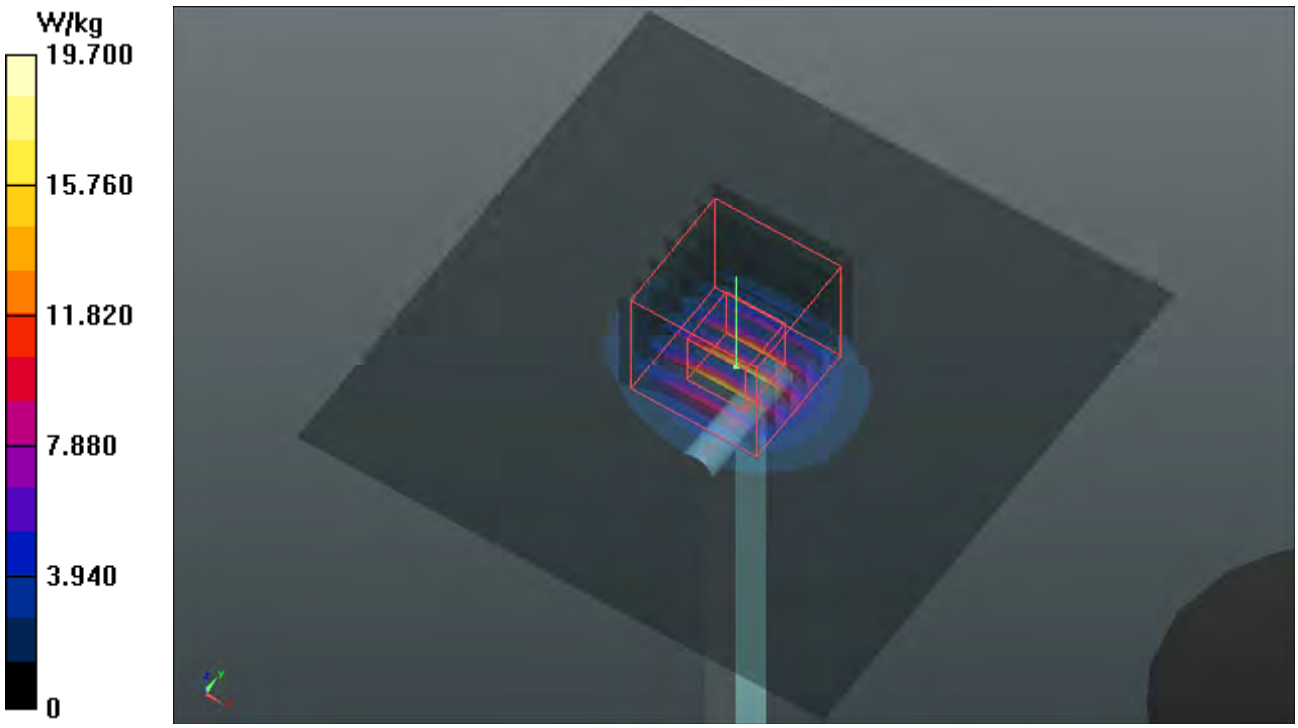

Test Laboratory: Bureau Veritas ADT SAR/HAC Testing Lab Date: 2017/09/08

System Check_B835_170908

DUT: Dipole 835 MHz; Type: D835V2; SN: 4d092

Communication System: CW; Frequency: 835 MHz;Duty Cycle: 1:1
Medium: B07T10N1_0908 Medium parameters used: f = 835 MHz; σ = 0.984 S/m; ε_r = 55.349; ρ = 1000 kg/m^3
Ambient Temperature：23.6 ℃ ; Liquid Temperature：23.2 ℃

DASY5 Configuration:
- Probe: ET3DV6 - SN1790; ConvF(6.66, 6.66, 6.66); Calibrated: 2017/05/24;
- Sensor-Surface: 4mm (Mechanical Surface Detection)
- Electronics: DAE4 Sn917; Calibrated: 2017/01/06
- Phantom: Twin SAM Phantom_1485; Type: QD000P40;
- Measurement SW: DASY52, Version 52.8 (8); SEMCAD X Version 14.6.10 (7373)

Pin=250mW/Area Scan (61x61x1): Interpolated grid: dx=1.500 mm, dy=1.500 mm
Maximum value of SAR (interpolated) = 3.01 W/kg

Pin=250mW/Zoom Scan (5x5x7)/Cube 0: Measurement grid: dx=8mm, dy=8mm, dz=5mm
Reference Value = 57.65 V/m; Power Drift = -0.06 dB
Peak SAR (extrapolated) = 3.38 W/kg
SAR(1 g) = 2.26 W/kg; SAR(10 g) = 1.49 W/kg
Maximum value of SAR (measured) = 3.00 W/kg

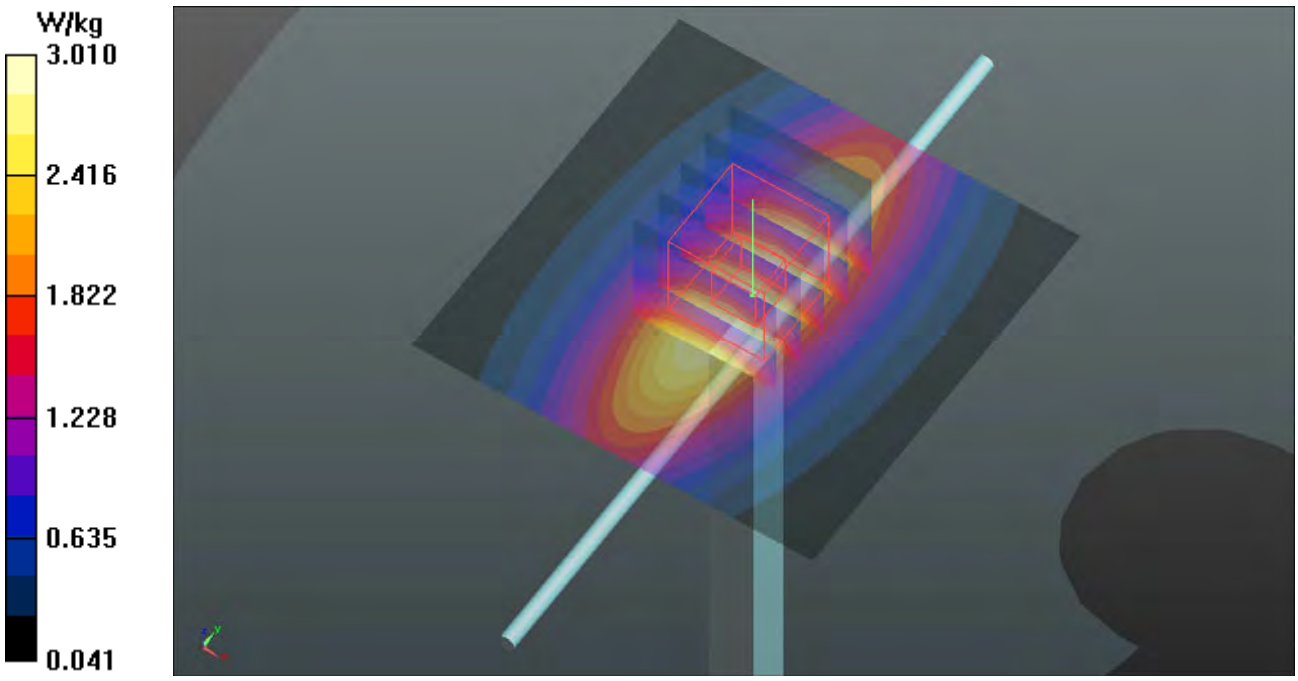

Test Laboratory: Bureau Veritas ADT SAR/HAC Testing Lab Date: 2017/09/08

System Check_B1900_170908

DUT: Dipole 1900 MHz; Type: D1900V2; SN: 5d036

Communication System: CW; Frequency: 1900 MHz;Duty Cycle: 1:1
Medium: B16T20N2_0908 Medium parameters used: f = 1900 MHz; σ = 1.582 S/m; ε_r = 51.601; ρ = 1000 kg/m^3
Ambient Temperature：23.6 ℃ ; Liquid Temperature：23.2 ℃

DASY5 Configuration:
- Probe: ET3DV6 - SN1790; ConvF(4.88, 4.88, 4.88); Calibrated: 2017/05/24;
- Sensor-Surface: 4mm (Mechanical Surface Detection)
- Electronics: DAE4 Sn917; Calibrated: 2017/01/06
- Phantom: Twin SAM Phantom_1485; Type: QD000P40;
- Measurement SW: DASY52, Version 52.8 (8); SEMCAD X Version 14.6.10 (7373)

Pin=250mW/Area Scan (61x61x1): Interpolated grid: dx=1.500 mm, dy=1.500 mm
Maximum value of SAR (interpolated) = 16.2 W/kg

Pin=250mW/Zoom Scan (5x5x7)/Cube 0: Measurement grid: dx=8mm, dy=8mm, dz=5mm
Reference Value = 103.7 V/m; Power Drift = -0.04 dB
Peak SAR (extrapolated) = 19.1 W/kg
SAR(1 g) = 10.5 W/kg; SAR(10 g) = 5.44 W/kg
Maximum value of SAR (measured) = 16.2 W/kg

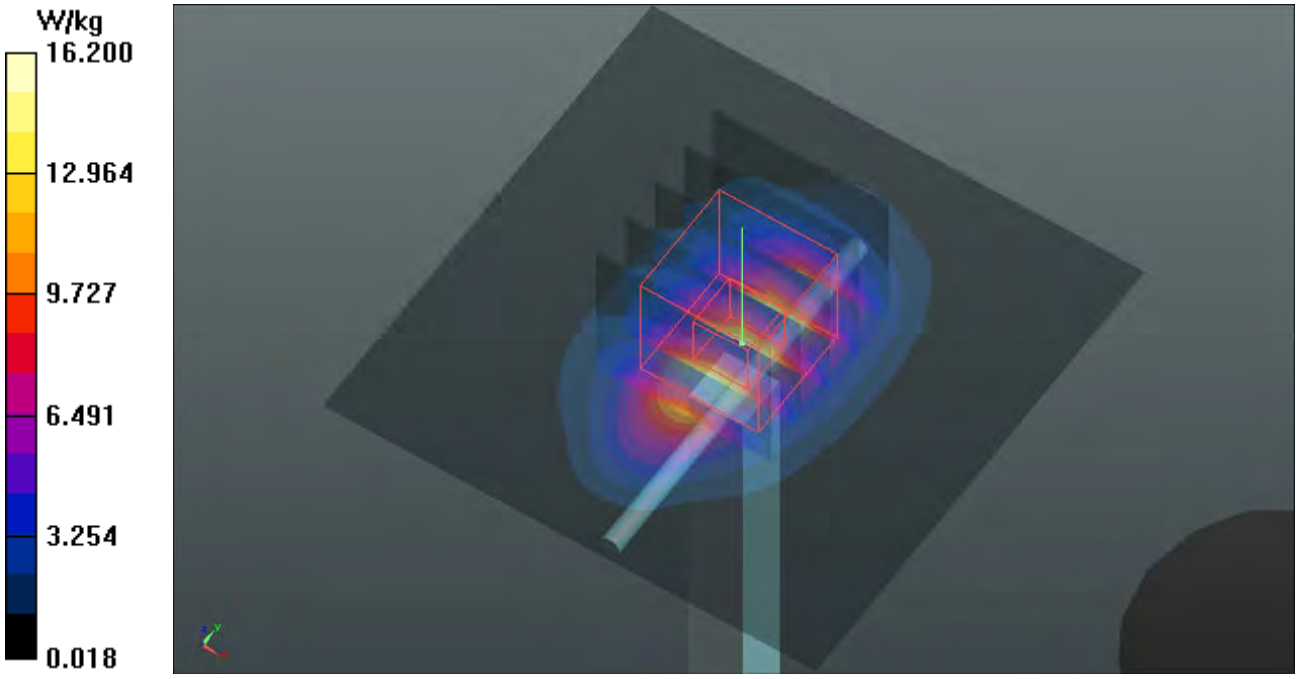

Test Laboratory: Bureau Veritas ADT SAR/HAC Testing Lab Date: 2017/07/14

System Check_B2450_170714

DUT: Dipole 2450 MHz; Type: D2450V2; SN: 737

Communication System: CW; Frequency: 2450 MHz;Duty Cycle: 1:1
Medium: B19T27N4_0714 Medium parameters used: f = 2450 MHz; σ = 1.997 S/m; ε_r = 51.558; ρ = 1000 kg/m^3
Ambient Temperature：23.8 ℃ ; Liquid Temperature：23.2 ℃

DASY5 Configuration:
- Probe: EX3DV4 - SN3753; ConvF(7.27, 7.27, 7.27); Calibrated: 2017/05/05;
- Sensor-Surface: 1.4mm (Mechanical Surface Detection)
- Electronics: DAE4 Sn916; Calibrated: 2016/12/15
- Phantom: Twin SAM Phantom_1127; Type: QD000P40CA;
- Measurement SW: DASY52, Version 52.8 (8); SEMCAD X Version 14.6.10 (7373)

Pin=250mW/Area Scan (81x81x1): Interpolated grid: dx=1.200 mm, dy=1.200 mm
Maximum value of SAR (interpolated) = 18.5 W/kg

Pin=250mW/Zoom Scan (7x7x7)/Cube 0: Measurement grid: dx=5mm, dy=5mm, dz=5mm
Reference Value = 97.78 V/m; Power Drift = -0.11 dB
Peak SAR (extrapolated) = 24.8 W/kg
SAR(1 g) = 12 W/kg; SAR(10 g) = 5.56 W/kg
Maximum value of SAR (measured) = 18.4 W/kg

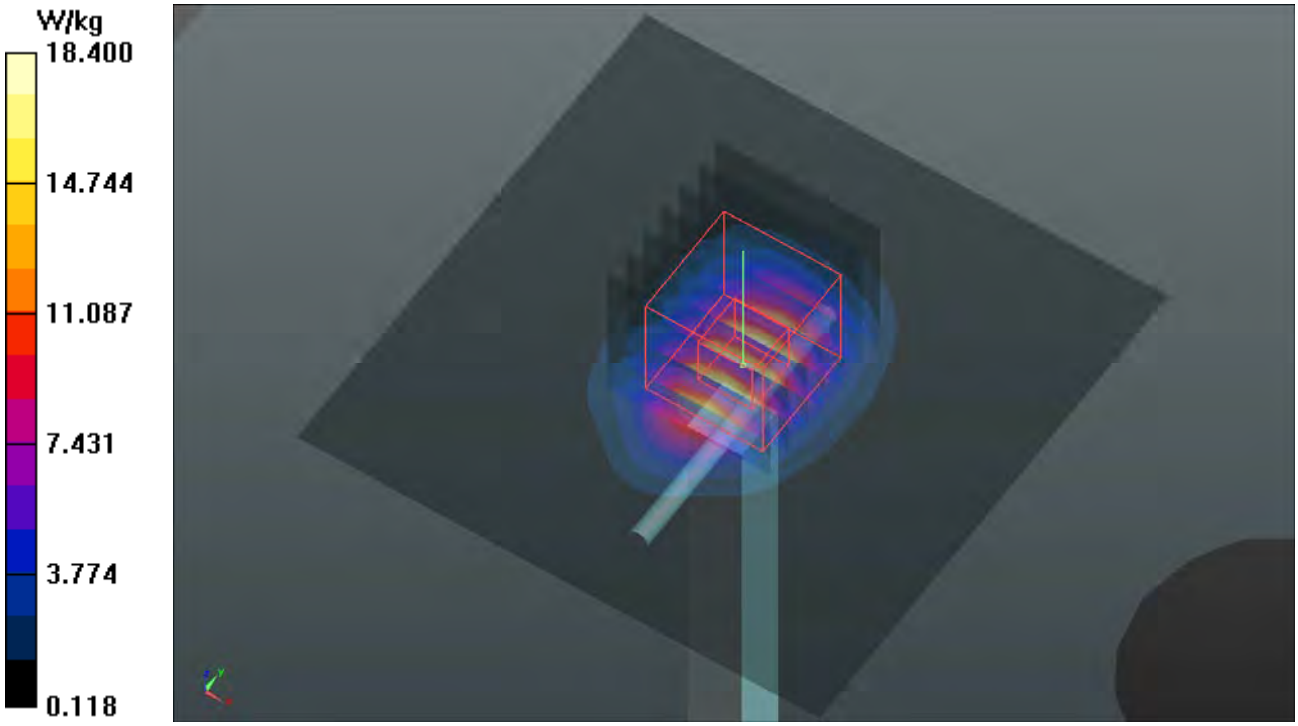

Test Laboratory: Bureau Veritas ADT SAR/HAC Testing Lab Date: 2017/08/02

System Check_B2600_170802

DUT: Dipole 2600 MHz; Type: D2600V2; SN: 1020

Communication System: CW; Frequency: 2600 MHz;Duty Cycle: 1:1
Medium: B19T27N5_0802 Medium parameters used: f = 2600 MHz; σ = 2.169 S/m; ε_r = 50.963; ρ = 1000 kg/m^3
Ambient Temperature：23.8 ℃ ; Liquid Temperature：23.4 ℃

DASY5 Configuration:
- Probe: EX3DV4 - SN3971; ConvF(7.32, 7.32, 7.32); Calibrated: 2017/03/24;
- Sensor-Surface: 1.4mm (Mechanical Surface Detection)
- Electronics: DAE3 Sn579; Calibrated: 2016/09/05
- Phantom: Twin SAM Phantom_1823; Type: QD000P40CD;
- Measurement SW: DASY52, Version 52.8 (8); SEMCAD X Version 14.6.10 (7373)

Pin=250mW/Area Scan (81x81x1): Interpolated grid: dx=1.200 mm, dy=1.200 mm
Maximum value of SAR (interpolated) = 23.5 W/kg

Pin=250mW/Zoom Scan (7x7x7)/Cube 0: Measurement grid: dx=5mm, dy=5mm, dz=5mm
Reference Value = 107.6 V/m; Power Drift = -0.12 dB
Peak SAR (extrapolated) = 29.2 W/kg
SAR(1 g) = 13.5 W/kg; SAR(10 g) = 6.01 W/kg
Maximum value of SAR (measured) = 23.3 W/kg

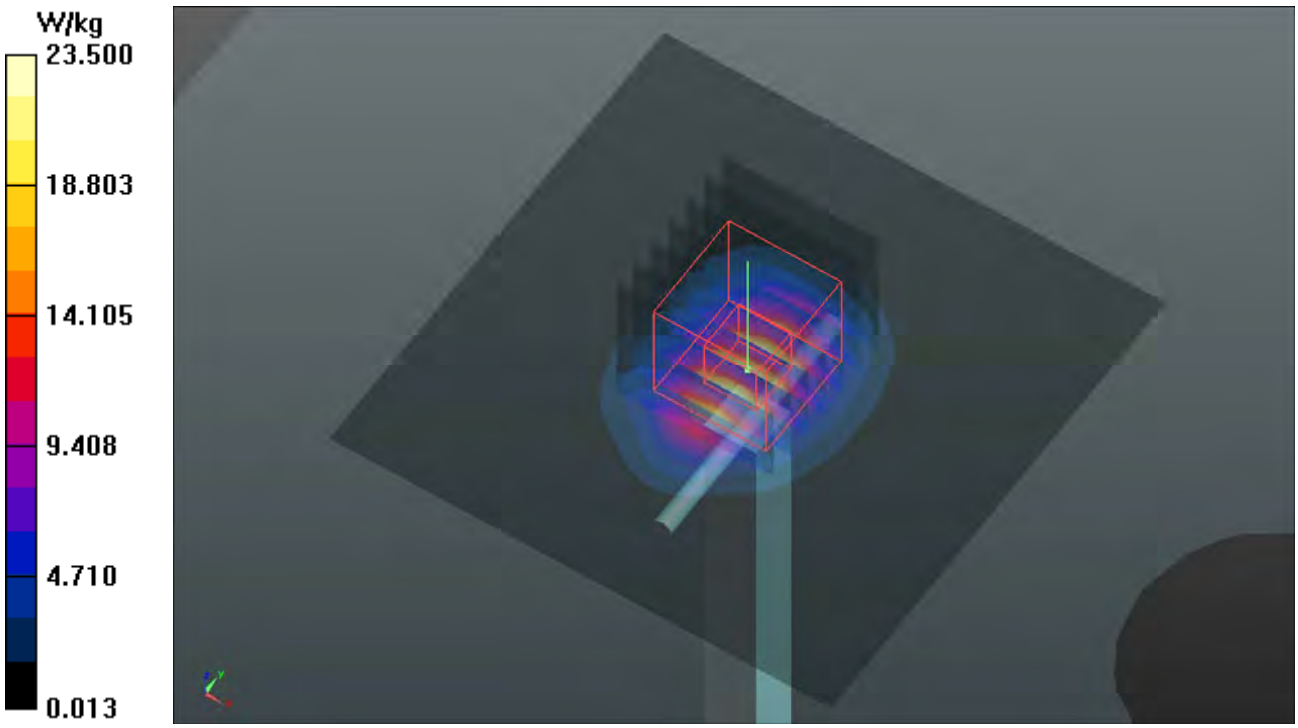

Test Laboratory: Bureau Veritas ADT SAR/HAC Testing Lab Date: 2017/09/11

System Check_B5200_170911

DUT: Dipole 5 GHz; Type: D5GHzV2; SN: 1203

Communication System: CW; Frequency: 5200 MHz;Duty Cycle: 1:1
Medium: B34T60N3_0911 Medium parameters used: f = 5200 MHz; σ = 5.416 S/m; ε_r = 47.007; ρ = 1000 kg/m^3
Ambient Temperature：23.8 ℃ ; Liquid Temperature：23.1 ℃

DASY5 Configuration:
- Probe: EX3DV4 - SN7375; ConvF(4.82, 4.82, 4.82); Calibrated: 2016/11/16;
- Sensor-Surface: 1.4mm (Mechanical Surface Detection)
- Electronics: DAE4 Sn1431; Calibrated: 2017/03/20
- Phantom: Twin SAM Phantom_1485; Type: QD000P40;
- Measurement SW: DASY52, Version 52.8 (8); SEMCAD X Version 14.6.10 (7373)

Pin=100mW/Area Scan (91x91x1): Interpolated grid: dx=1.000 mm, dy=1.000 mm
Maximum value of SAR (interpolated) = 16.9 W/kg

Pin=100mW/Zoom Scan (7x7x12)/Cube 0: Measurement grid: dx=4mm, dy=4mm, dz=2mm
Reference Value = 66.64 V/m; Power Drift = -0.03 dB
Peak SAR (extrapolated) = 29.0 W/kg
SAR(1 g) = 7.54 W/kg; SAR(10 g) = 2.14 W/kg
Maximum value of SAR (measured) = 18.6 W/kg

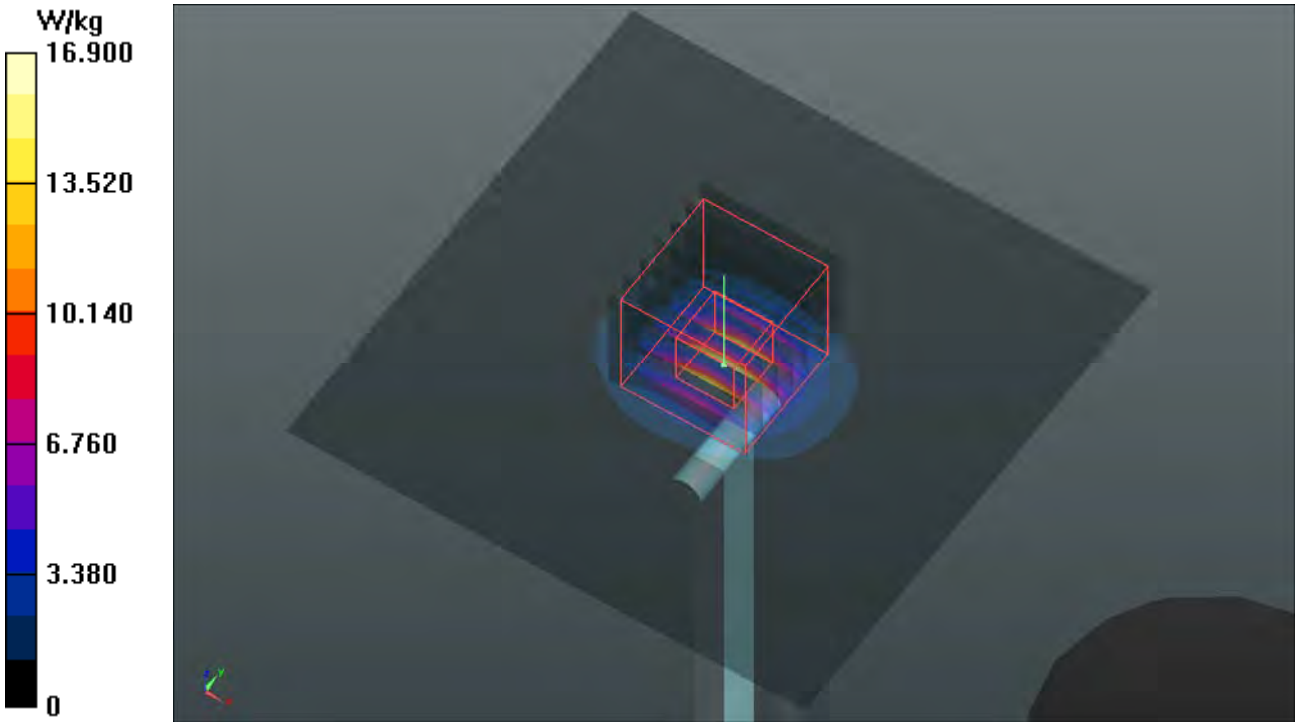

Test Laboratory: Bureau Veritas ADT SAR/HAC Testing Lab Date: 2017/07/14

System Check_B5250_170714

DUT: Dipole 5 GHz; Type: D5GHzV2; SN: 1019

Communication System: CW; Frequency: 5250 MHz;Duty Cycle: 1:1
Medium: B34T60N1_0714 Medium parameters used: f = 5250 MHz; σ = 5.395 S/m; ε_r = 47.266; ρ = 1000 kg/m^3
Ambient Temperature：23.9 ℃ ; Liquid Temperature：23.3 ℃

DASY5 Configuration:
- Probe: EX3DV4 - SN3971; ConvF(4.7, 4.7, 4.7); Calibrated: 2017/03/24;
- Sensor-Surface: 1.4mm (Mechanical Surface Detection)
- Electronics: DAE3 Sn579; Calibrated: 2016/09/05
- Phantom: Twin SAM Phantom_1485; Type: QD000P40
- Measurement SW: DASY52, Version 52.8 (8); SEMCAD X Version 14.6.10 (7373)

Pin=100mW/Area Scan (91x91x1): Interpolated grid: dx=1.000 mm, dy=1.000 mm
Maximum value of SAR (interpolated) = 17.1 W/kg

Pin=100mW/Zoom Scan (7x7x12)/Cube 0: Measurement grid: dx=4mm, dy=4mm, dz=2mm
Reference Value = 55.79 V/m; Power Drift = -0.07 dB
Peak SAR (extrapolated) = 30.2 W/kg
SAR(1 g) = 7.29 W/kg; SAR(10 g) = 2.09 W/kg
Maximum value of SAR (measured) = 18.3 W/kg

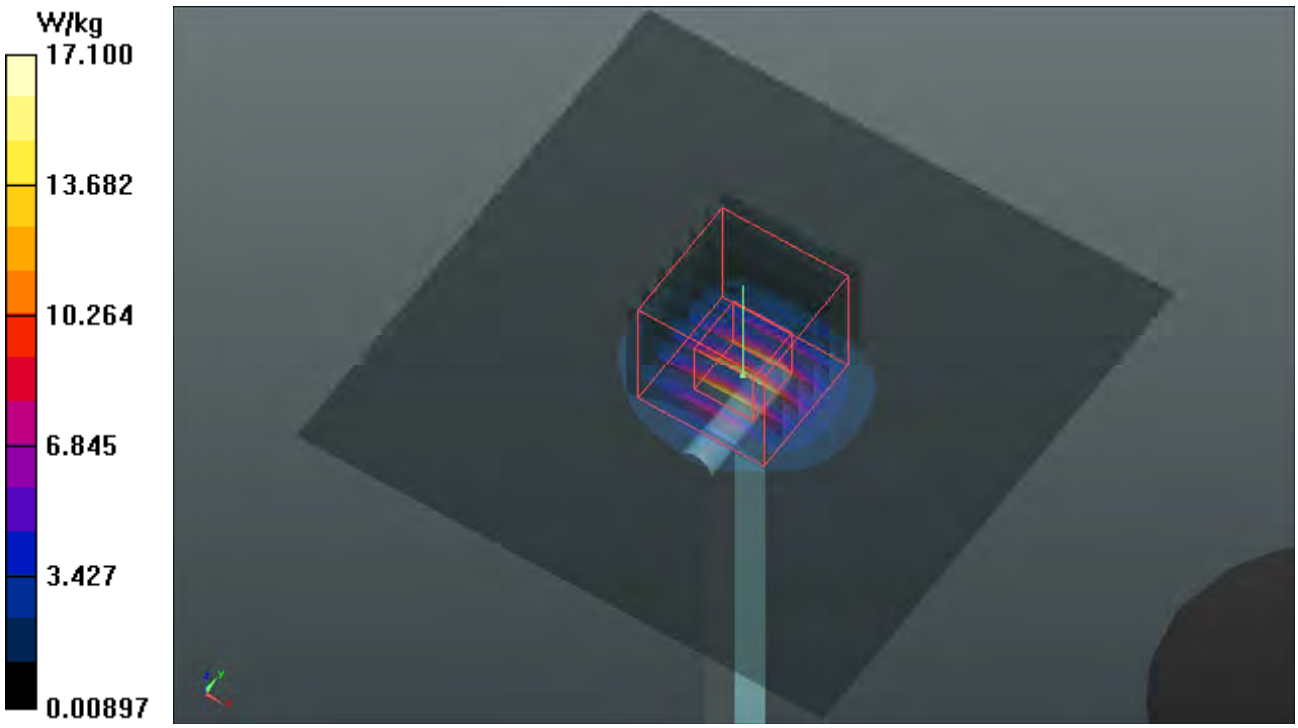

Test Laboratory: Bureau Veritas ADT SAR/HAC Testing Lab Date: 2017/09/11

System Check_B5300_170911

DUT: Dipole 5 GHz; Type: D5GHzV2; SN: 1203

Communication System: CW; Frequency: 5300 MHz;Duty Cycle: 1:1
Medium: B34T60N3_0911 Medium parameters used: f = 5300 MHz; σ = 5.541 S/m; ε_r = 46.822; ρ = 1000 kg/m^3
Ambient Temperature：23.8 ℃ ; Liquid Temperature：23.1 ℃

DASY5 Configuration:
- Probe: EX3DV4 - SN7375; ConvF(4.57, 4.57, 4.57); Calibrated: 2016/12/08;
- Sensor-Surface: 1.4mm (Mechanical Surface Detection)
- Electronics: DAE4 Sn1431; Calibrated: 2017/03/20
- Phantom: Twin SAM Phantom_1485; Type: QD000P40;
- Measurement SW: DASY52, Version 52.8 (8); SEMCAD X Version 14.6.10 (7373)

Pin=100mW/Area Scan (91x91x1): Interpolated grid: dx=1.000 mm, dy=1.000 mm
Maximum value of SAR (interpolated) = 19.3 W/kg

Pin=100mW/Zoom Scan (7x7x12)/Cube 0: Measurement grid: dx=4mm, dy=4mm, dz=2mm
Reference Value = 59.29 V/m; Power Drift = -0.10 dB
Peak SAR (extrapolated) = 31.9 W/kg
SAR(1 g) = 8.1 W/kg; SAR(10 g) = 2.33 W/kg
Maximum value of SAR (measured) = 20.2 W/kg

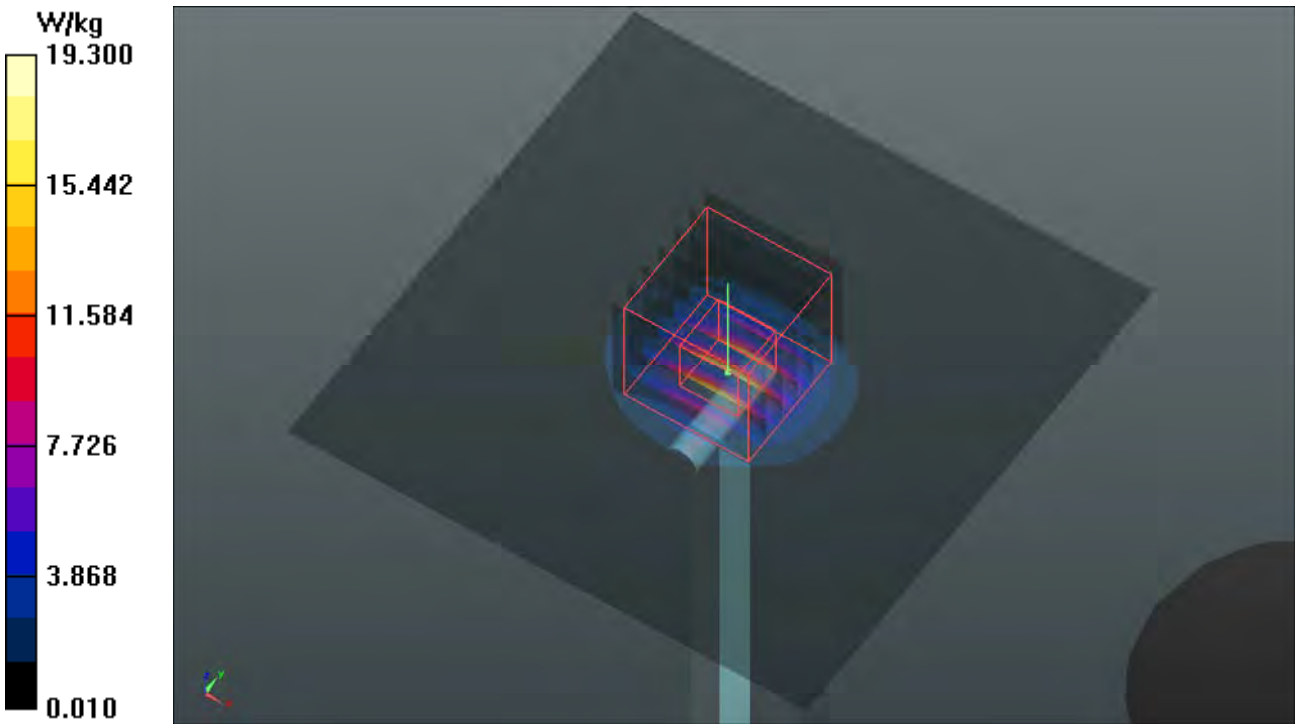

Test Laboratory: Bureau Veritas ADT SAR/HAC Testing Lab Date: 2017/09/11

System Check_B5600_170911

DUT: Dipole 5 GHz; Type: D5GHzV2; SN: 1203

Communication System: CW; Frequency: 5600 MHz;Duty Cycle: 1:1
Medium: B34T60N3_0911 Medium parameters used: f = 5600 MHz; σ = 5.935 S/m; ε_r = 46.347; ρ = 1000 kg/m^3
Ambient Temperature：23.8 ℃ ; Liquid Temperature：23.2 ℃

DASY5 Configuration:
- Probe: EX3DV4 - SN7375; ConvF(3.99, 3.99, 3.99); Calibrated: 2016/12/08;
- Sensor-Surface: 1.4mm (Mechanical Surface Detection)
- Electronics: DAE4 Sn1431; Calibrated: 2017/03/20
- Phantom: Twin SAM Phantom_1485; Type: QD000P40;
- Measurement SW: DASY52, Version 52.8 (8); SEMCAD X Version 14.6.10 (7373)

Pin=100mW/Area Scan (91x91x1): Interpolated grid: dx=1.000 mm, dy=1.000 mm
Maximum value of SAR (interpolated) = 18.8 W/kg

Pin=100mW/Zoom Scan (7x7x12)/Cube 0: Measurement grid: dx=4mm, dy=4mm, dz=2mm
Reference Value = 67.60 V/m; Power Drift = -0.15 dB
Peak SAR (extrapolated) = 34.4 W/kg
SAR(1 g) = 8.16 W/kg; SAR(10 g) = 2.32 W/kg
Maximum value of SAR (measured) = 20.9 W/kg

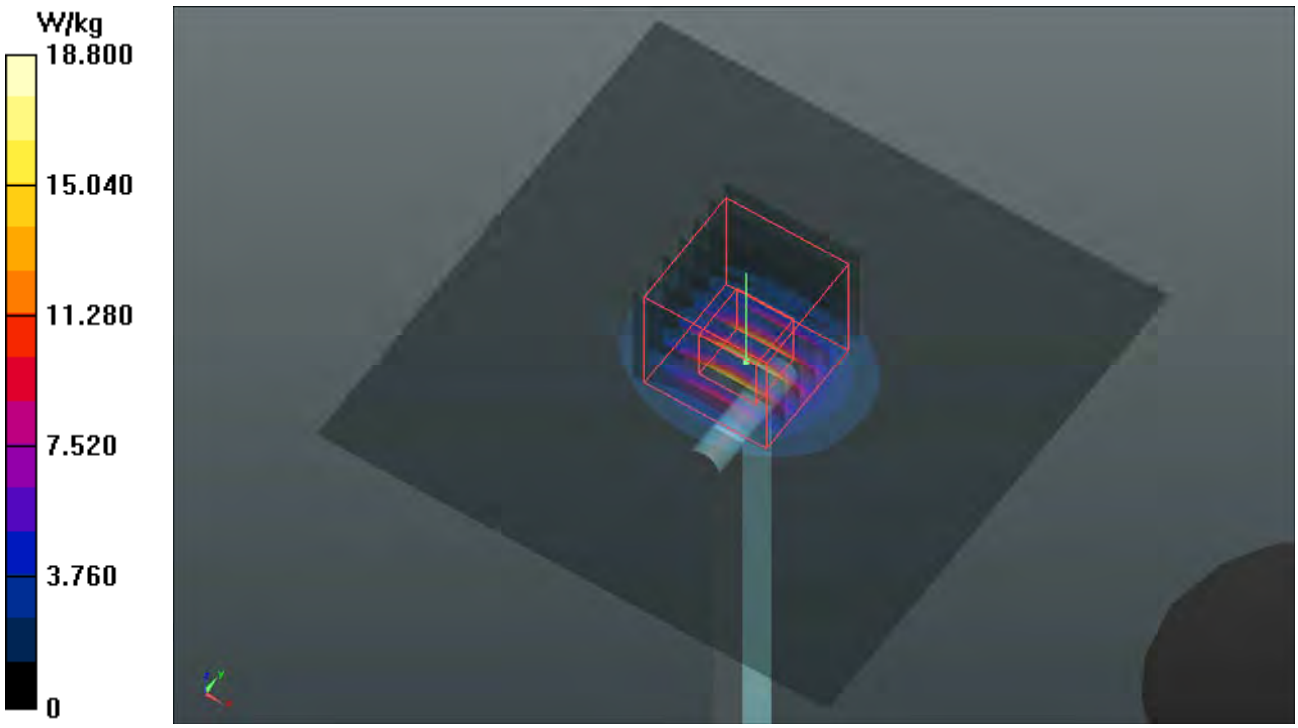

Test Laboratory: Bureau Veritas ADT SAR/HAC Testing Lab Date: 2017/09/11

System Check_B5800_170911

DUT: Dipole 5 GHz; Type: D5GHzV2; SN: 1203

Communication System: CW; Frequency: 5800 MHz;Duty Cycle: 1:1
Medium: B34T60N3_0911 Medium parameters used: f = 5800 MHz; σ = 6.216 S/m; ε_r = 45.997; ρ = 1000 kg/m^3
Ambient Temperature：23.7 ℃ ; Liquid Temperature：23.3 ℃

DASY5 Configuration:
- Probe: EX3DV4 - SN7375; ConvF(4.08, 4.08, 4.08); Calibrated: 2016/12/08;
- Sensor-Surface: 1.4mm (Mechanical Surface Detection)
- Electronics: DAE4 Sn1431; Calibrated: 2017/03/20
- Phantom: Twin SAM Phantom_1485; Type: QD000P40;
- Measurement SW: DASY52, Version 52.8 (8); SEMCAD X Version 14.6.10 (7373)

Pin=100mW/Area Scan (91x91x1): Interpolated grid: dx=1.000 mm, dy=1.000 mm
Maximum value of SAR (interpolated) = 15.6 W/kg

Pin=100mW/Zoom Scan (7x7x12)/Cube 0: Measurement grid: dx=4mm, dy=4mm, dz=2mm
Reference Value = 57.71 V/m; Power Drift = -0.13 dB
Peak SAR (extrapolated) = 31.9 W/kg
SAR(1 g) = 7.73 W/kg; SAR(10 g) = 2.17 W/kg
Maximum value of SAR (measured) = 16.5 W/kg

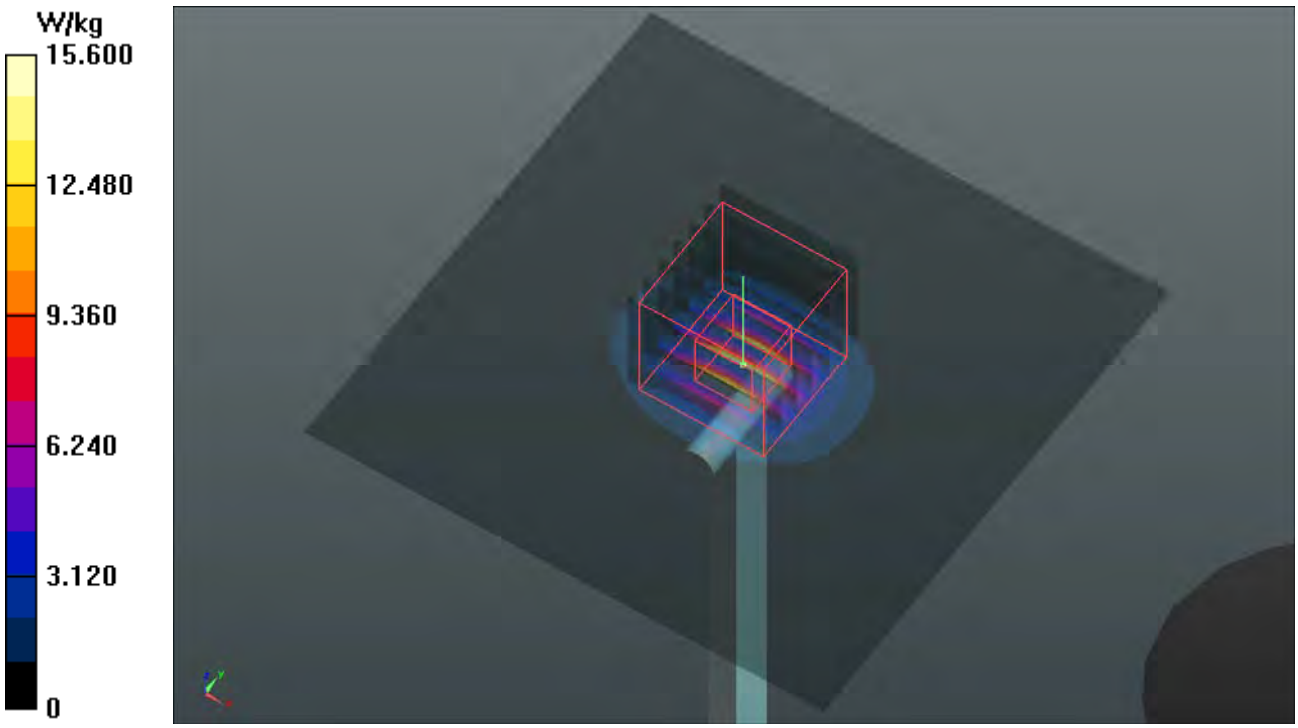

Appendix B. SAR Plots of SAR Measurement

The SAR plots for highest measured SAR in each exposure configuration, wireless mode and frequency band combination, and measured SAR > 1.5 W/kg are shown as follows.

P01 GSM850_GPRS10_Right Cheek_Ch189_Ant1

DUT: 170726C31

Communication System: GPRS10; Frequency: 836.4 MHz;Duty Cycle: 1:4
Medium: H07T10N1_0816 Medium parameters used: f = 836.4 MHz; σ = 0.91 S/m; ε_r = 41.657; ρ = 1000 kg/m^3
Ambient Temperature：23.7 ℃ ; Liquid Temperature：23.2 ℃

DASY5 Configuration:
- Probe: EX3DV4 - SN3971; ConvF(10.67, 10.67, 10.67); Calibrated: 2017/03/24;
- Sensor-Surface: 1.4mm (Mechanical Surface Detection)
- Electronics: DAE4 Sn916; Calibrated: 2016/12/15
- Phantom: Twin SAM Phantom_1485; Type: QD000P40;
- Measurement SW: DASY52, Version 52.8 (8); SEMCAD X Version 14.6.10 (7373)

- Area Scan (71x121x1): Interpolated grid: dx=1.500 mm, dy=1.500 mm
Maximum value of SAR (interpolated) = 1.71 W/kg

- Zoom Scan (5x5x7)/Cube 0: Measurement grid: dx=8mm, dy=8mm, dz=5mm
Reference Value = 38.94 V/m; Power Drift = -0.03 dB
Peak SAR (extrapolated) = 2.13 W/kg
SAR(1 g) = 1.05 W/kg; SAR(10 g) = 0.572 W/kg
Maximum value of SAR (measured) = 1.68 W/kg

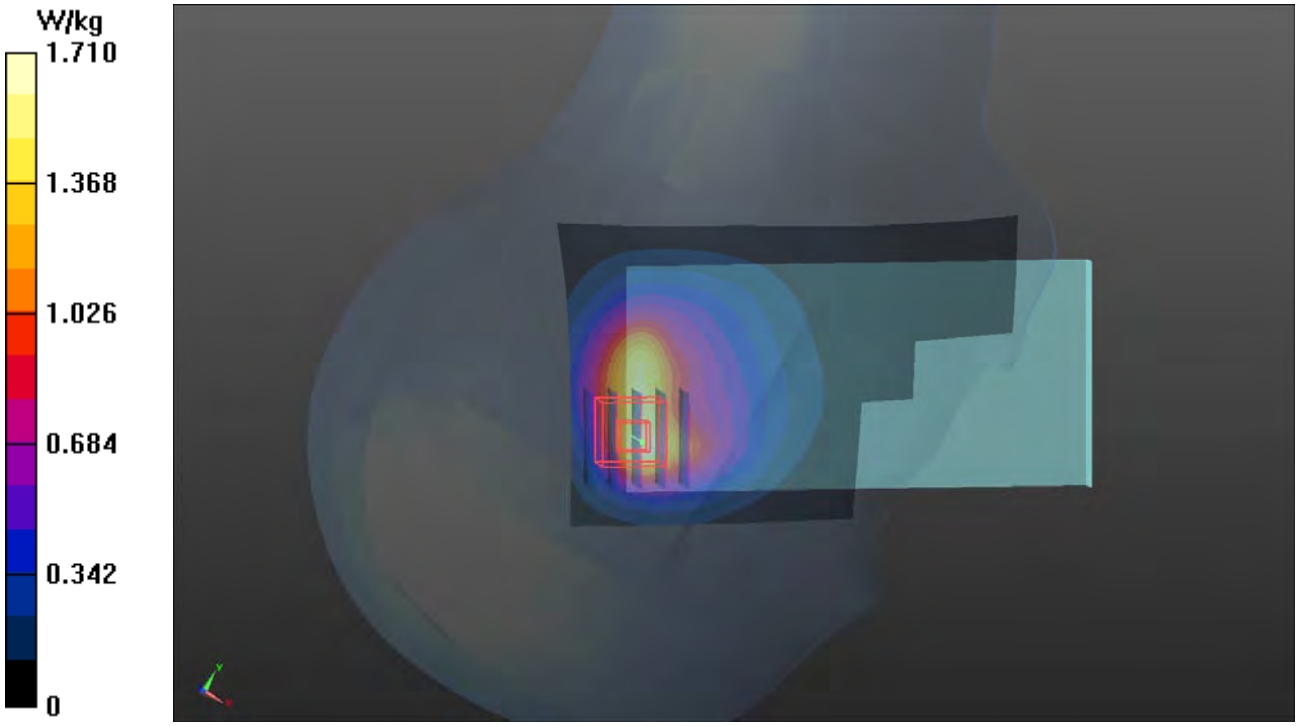

P02 GSM1900_GPRS10_Right Cheek_Ch512_Ant1

DUT: 170426C41

Communication System: GPRS10; Frequency: 1850.2 MHz;Duty Cycle: 1:4
Medium: H16T20N1_0818 Medium parameters used: f = 1850.2 MHz; σ = 1.405 S/m;ε_r = 38.736; ρ = 1000 kg/m^3
Ambient Temperature：23.7 ℃ ; Liquid Temperature：23.2 ℃

DASY5 Configuration:
- Probe: EX3DV4 - SN7351; ConvF(8.59, 8.59, 8.59); Calibrated: 2016/12/20;
- Sensor-Surface: 1.4mm (Mechanical Surface Detection)
- Electronics: DAE4 Sn861; Calibrated: 2017/05/22
- Phantom: Twin SAM Phantom_1496; Type: QD000P40CA;
- Measurement SW: DASY52, Version 52.8 (8); SEMCAD X Version 14.6.10 (7373)

- Area Scan (71x121x1): Interpolated grid: dx=1.500 mm, dy=1.500 mm
Maximum value of SAR (interpolated) = 1.41 W/kg

- Zoom Scan (5x5x7)/Cube 0: Measurement grid: dx=8mm, dy=8mm, dz=5mm
Reference Value = 28.77 V/m; Power Drift = 0.12 dB
Peak SAR (extrapolated) = 1.52 W/kg
SAR(1 g) = 0.818 W/kg; SAR(10 g) = 0.430 W/kg
Maximum value of SAR (measured) = 1.21 W/kg

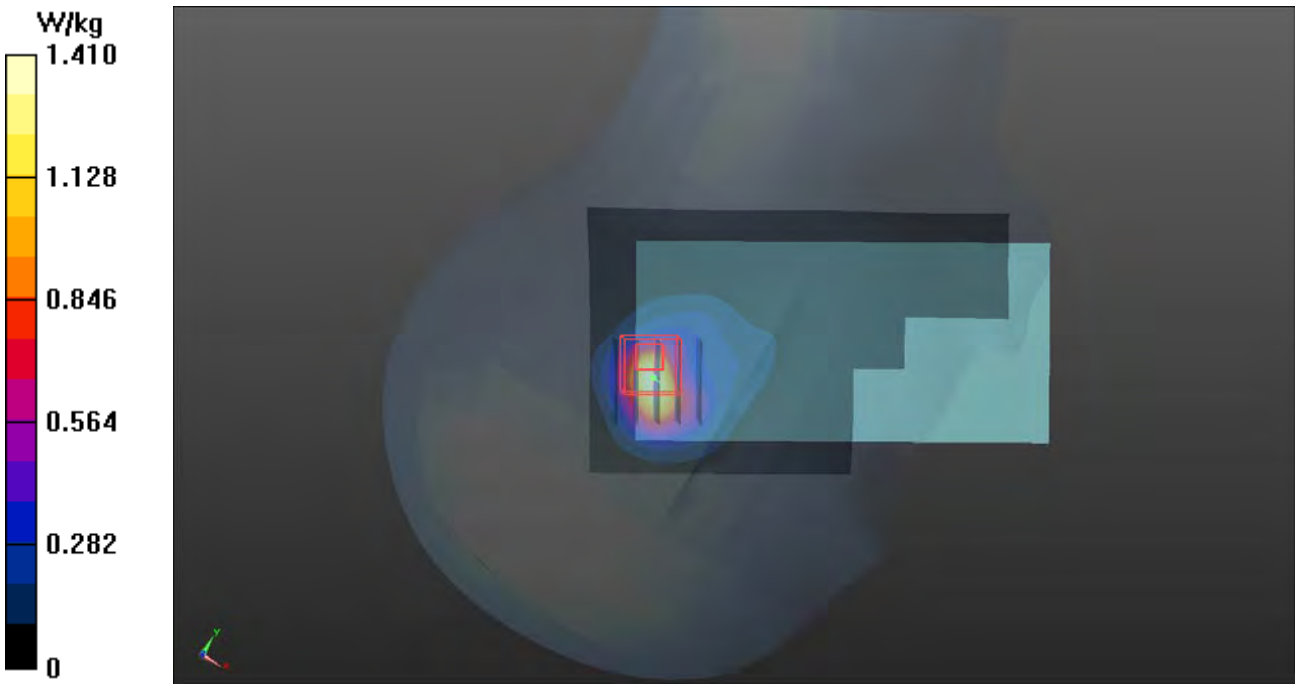

P03 WCDMA II_RMC12.2K_Right Cheek_Ch9538_Ant1

DUT: 170726C31

Communication System: WCDMA; Frequency: 1907.6 MHz;Duty Cycle: 1:1
Medium: H16T20N3_0817 Medium parameters used: f = 1908 MHz; σ = 1.468 S/m; ε_r = 38.958; ρ = 1000 kg/m^3
Ambient Temperature：23.7 ℃ ; Liquid Temperature：23.2 ℃

DASY5 Configuration:
- Probe: EX3DV4 - SN7351; ConvF(8.59, 8.59, 8.59); Calibrated: 2016/12/20;
- Sensor-Surface: 1.4mm (Mechanical Surface Detection)
- Electronics: DAE4 Sn861; Calibrated: 2017/05/22
- Phantom: Twin SAM Phantom_1496; Type: QD000P40CA;
- Measurement SW: DASY52, Version 52.8 (8); SEMCAD X Version 14.6.10 (7373)

- Area Scan (71x121x1): Interpolated grid: dx=1.500 mm, dy=1.500 mm
Maximum value of SAR (interpolated) = 2.16 W/kg

- Zoom Scan (5x5x7)/Cube 0: Measurement grid: dx=8mm, dy=8mm, dz=5mm
Reference Value = 36.16 V/m; Power Drift = -0.01 dB
Peak SAR (extrapolated) = 2.29 W/kg
SAR(1 g) = 1.09 W/kg; SAR(10 g) = 0.555 W/kg
Maximum value of SAR (measured) = 1.89 W/kg

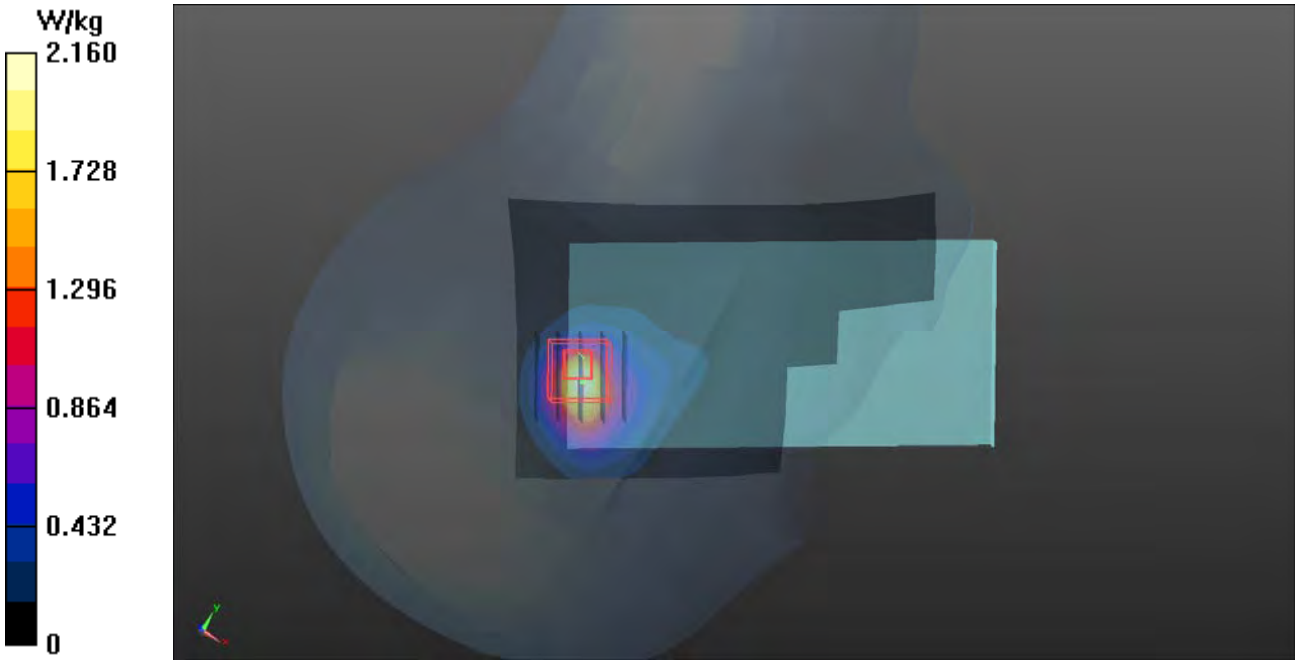

P04 WCDMA V_RMC12.2K_Right Cheek_Ch4182_Ant1

DUT: 170426C41

Communication System: WCDMA; Frequency: 836.4 MHz;Duty Cycle: 1:1
Medium: H07T10N2_0821 Medium parameters used: f = 836.4 MHz; σ = 0.911 S/m; ε_r = 42.651; ρ = 1000 kg/m^3
Ambient Temperature：23.8 ℃ ; Liquid Temperature：23.1 ℃

DASY5 Configuration:
- Probe: EX3DV4 - SN7351; ConvF(10.37, 10.37, 10.37); Calibrated: 2016/12/20;
- Sensor-Surface: 1.4mm (Mechanical Surface Detection)
- Electronics: DAE4 Sn861; Calibrated: 2017/05/22
- Phantom: Twin SAM Phantom_1496; Type: QD000P40CA;
- Measurement SW: DASY52, Version 52.8 (8); SEMCAD X Version 14.6.10 (7373)

- Area Scan (71x121x1): Interpolated grid: dx=1.500 mm, dy=1.500 mm
Maximum value of SAR (interpolated) = 1.74 W/kg

- Zoom Scan (5x5x7)/Cube 0: Measurement grid: dx=8mm, dy=8mm, dz=5mm
Reference Value = 41.13 V/m; Power Drift = 0.06 dB
Peak SAR (extrapolated) = 1.92 W/kg
SAR(1 g) = 0.943 W/kg; SAR(10 g) = 0.523 W/kg
Maximum value of SAR (measured) = 1.52 W/kg

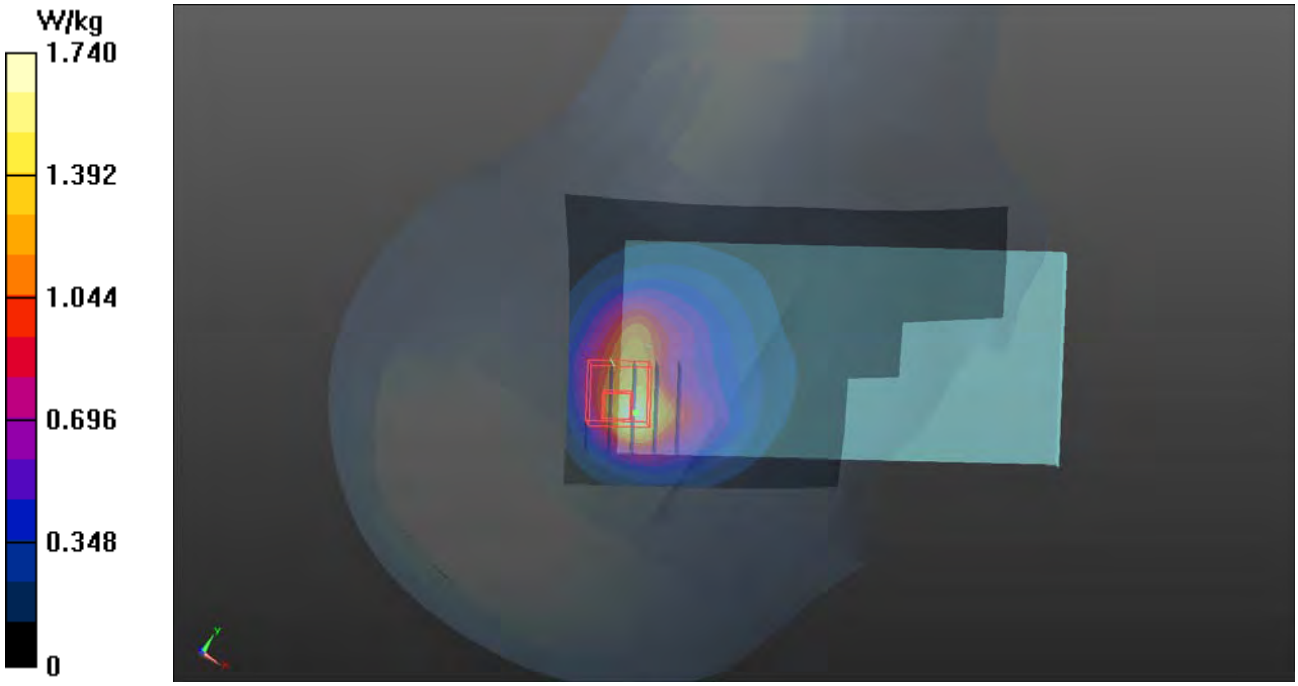

P05 LTE 2_QPSK20M_Left Cheek_Ch19100_Ant1_1RB_OS0

DUT: 170726C31

Communication System: LTE; Frequency: 1900 MHz;Duty Cycle: 1:1
Medium: H16T20N3_0817 Medium parameters used: f = 1900 MHz; σ = 1.461 S/m; ε_r = 38.975; ρ = 1000 kg/m^3
Ambient Temperature：23.7 ℃ ; Liquid Temperature：23.2 ℃

DASY5 Configuration:
- Probe: EX3DV4 - SN7351; ConvF(8.59, 8.59, 8.59); Calibrated: 2016/12/20;
- Sensor-Surface: 1.4mm (Mechanical Surface Detection)
- Electronics: DAE4 Sn861; Calibrated: 2017/05/22
- Phantom: Twin SAM Phantom_1496; Type: QD000P40CA;
- Measurement SW: DASY52, Version 52.8 (8); SEMCAD X Version 14.6.10 (7373)

- Area Scan (71x121x1): Interpolated grid: dx=1.500 mm, dy=1.500 mm
Maximum value of SAR (interpolated) = 1.02 W/kg

- Zoom Scan (5x5x7)/Cube 0: Measurement grid: dx=8mm, dy=8mm, dz=5mm
Reference Value = 25.36 V/m; Power Drift = -0.17 dB
Peak SAR (extrapolated) = 1.64 W/kg
SAR(1 g) = 0.842 W/kg; SAR(10 g) = 0.408 W/kg
Maximum value of SAR (measured) = 1.36 W/kg

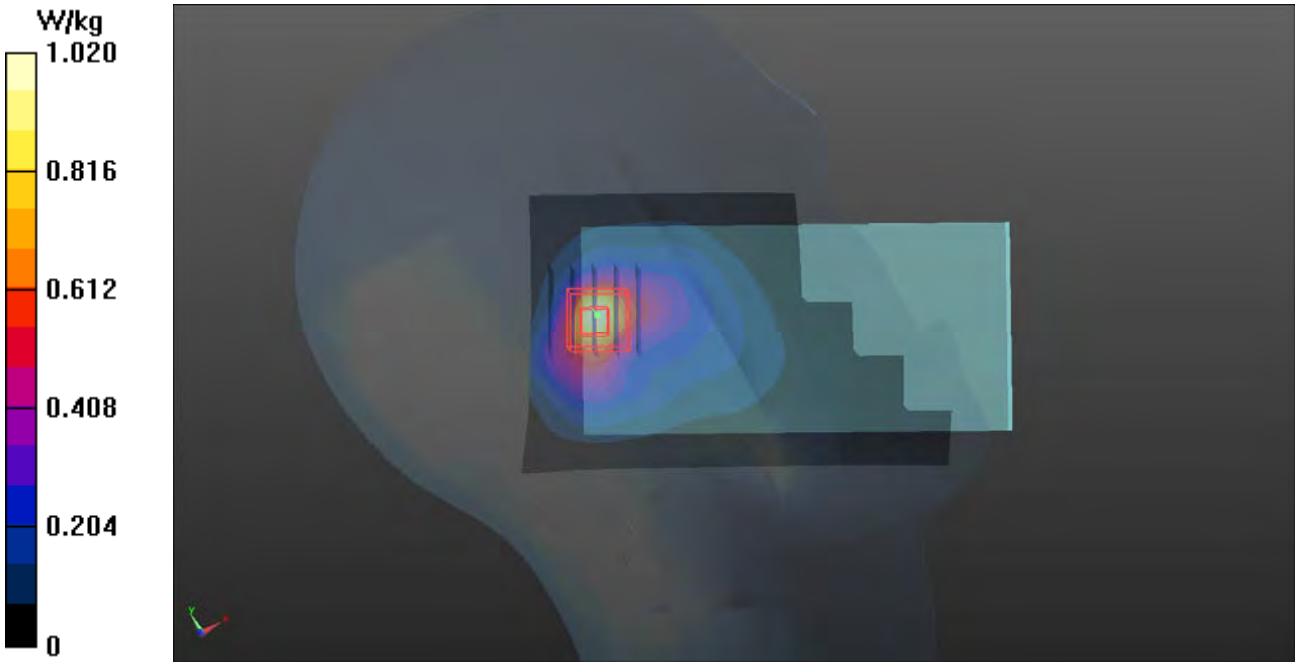

P06 LTE 5_QPSK10M_Right Cheek_Ch20600_Ant1_1RB_OS0

DUT: 170726C31

Communication System: LTE; Frequency: 844 MHz;Duty Cycle: 1:1
Medium: H07T10N1_0816 Medium parameters used: f = 844 MHz; σ = 0.917 S/m; ε_r = 41.566; ρ = 1000 kg/m^3
Ambient Temperature：23.7 ℃ ; Liquid Temperature：23.2 ℃

DASY5 Configuration:
- Probe: EX3DV4 - SN3971; ConvF(10.67, 10.67, 10.67); Calibrated: 2017/03/24;
- Sensor-Surface: 1.4mm (Mechanical Surface Detection)
- Electronics: DAE4 Sn916; Calibrated: 2016/12/15
- Phantom: Twin SAM Phantom_1485; Type: QD000P40;
- Measurement SW: DASY52, Version 52.8 (8); SEMCAD X Version 14.6.10 (7373)

- Area Scan (71x121x1): Interpolated grid: dx=1.500 mm, dy=1.500 mm
Maximum value of SAR (interpolated) = 1.78 W/kg

- Zoom Scan (5x5x7)/Cube 0: Measurement grid: dx=8mm, dy=8mm, dz=5mm
Reference Value = 36.22 V/m; Power Drift = 0.02 dB
Peak SAR (extrapolated) = 2.09 W/kg
SAR(1 g) = 1.05 W/kg; SAR(10 g) = 0.570 W/kg
Maximum value of SAR (measured) = 1.57 W/kg

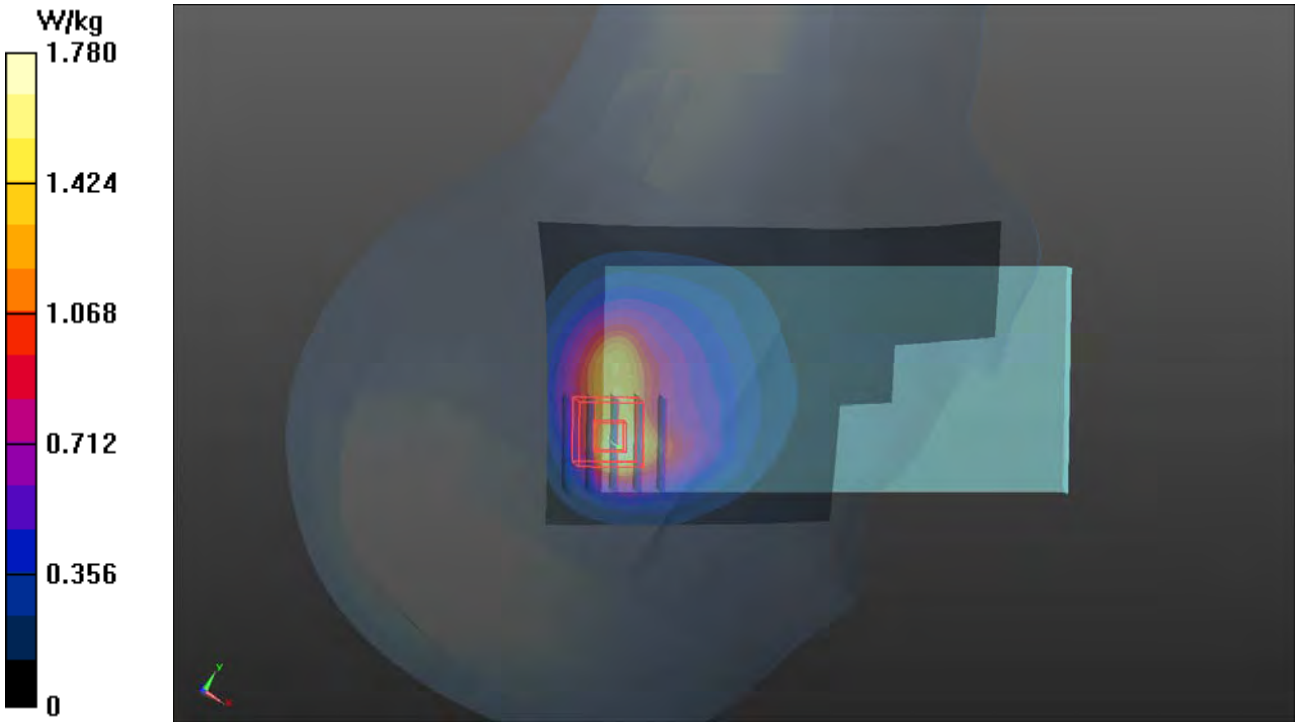

P07 LTE 7_QPSK20M_Left Cheek_Ch21350_Ant0_1RB_OS50

DUT: 170726C31

Communication System: LTE; Frequency: 2560 MHz;Duty Cycle: 1:1
Medium: H19T27N1_0823 Medium parameters used: f = 2560 MHz; σ = 1.983 S/m; ε_r = 38.724; ρ = 1000 kg/m^3
Ambient Temperature：23.7 ℃ ; Liquid Temperature：23.2 ℃

DASY5 Configuration:
- Probe: EX3DV4 - SN7351; ConvF(7.43, 7.43, 7.43); Calibrated: 2016/12/20;
- Sensor-Surface: 1.4mm (Mechanical Surface Detection)
- Electronics: DAE4 Sn861; Calibrated: 2017/05/22
- Phantom: Twin SAM Phantom_1496; Type: QD000P40CA;
- Measurement SW: DASY52, Version 52.8 (8); SEMCAD X Version 14.6.10 (7373)

- Area Scan (91x151x1): Interpolated grid: dx=1.200 mm, dy=1.200 mm
Maximum value of SAR (interpolated) = 0.198 W/kg

- Zoom Scan (5x5x7)/Cube 0: Measurement grid: dx=8mm, dy=8mm, dz=5mm
Reference Value = 10.05 V/m; Power Drift = -0.02 dB
Peak SAR (extrapolated) = 0.216 W/kg
SAR(1 g) = 0.122 W/kg; SAR(10 g) = 0.068 W/kg
Maximum value of SAR (measured) = 0.174 W/kg

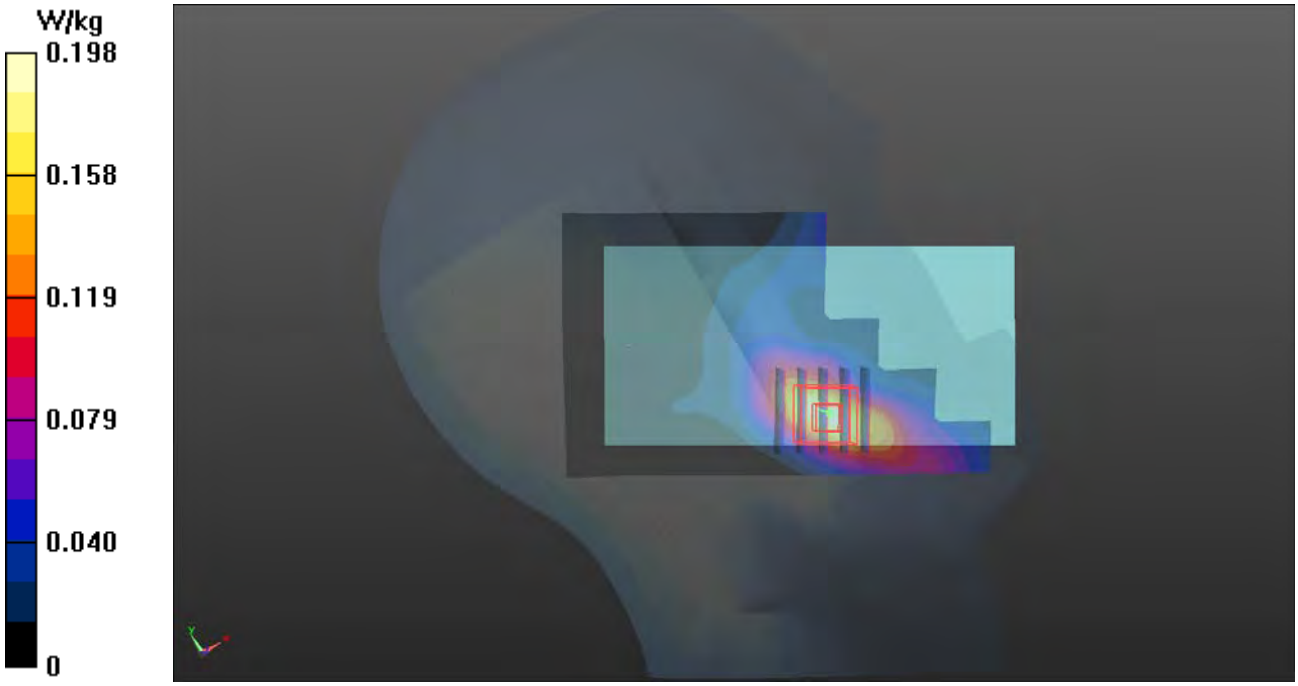

P08 LTE 26_QPSK15M_Right Cheek_Ch26965_Ant1_1RB_OS0

DUT: 170726C31

Communication System: LTE; Frequency: 841.5 MHz;Duty Cycle: 1:1
Medium: H07T10N1_0816 Medium parameters used: f = 841.5 MHz; σ = 0.915 S/m; ε_r = 41.595; ρ = 1000 kg/m^3
Ambient Temperature：23.7 ℃ ; Liquid Temperature：23.2 ℃

DASY5 Configuration:
- Probe: EX3DV4 - SN3971; ConvF(10.67, 10.67, 10.67); Calibrated: 2017/03/24;
- Sensor-Surface: 1.4mm (Mechanical Surface Detection)
- Electronics: DAE4 Sn916; Calibrated: 2016/12/15
- Phantom: Twin SAM Phantom_1485; Type: QD000P40;
- Measurement SW: DASY52, Version 52.8 (8); SEMCAD X Version 14.6.10 (7373)

- Area Scan (71x121x1): Interpolated grid: dx=1.500 mm, dy=1.500 mm
Maximum value of SAR (interpolated) = 1.80 W/kg

- Zoom Scan (5x5x7)/Cube 0: Measurement grid: dx=8mm, dy=8mm, dz=5mm
Reference Value = 35.84 V/m; Power Drift = 0.03 dB
Peak SAR (extrapolated) = 2.10 W/kg
SAR(1 g) = 1.05 W/kg; SAR(10 g) = 0.571 W/kg
Maximum value of SAR (measured) = 1.58 W/kg

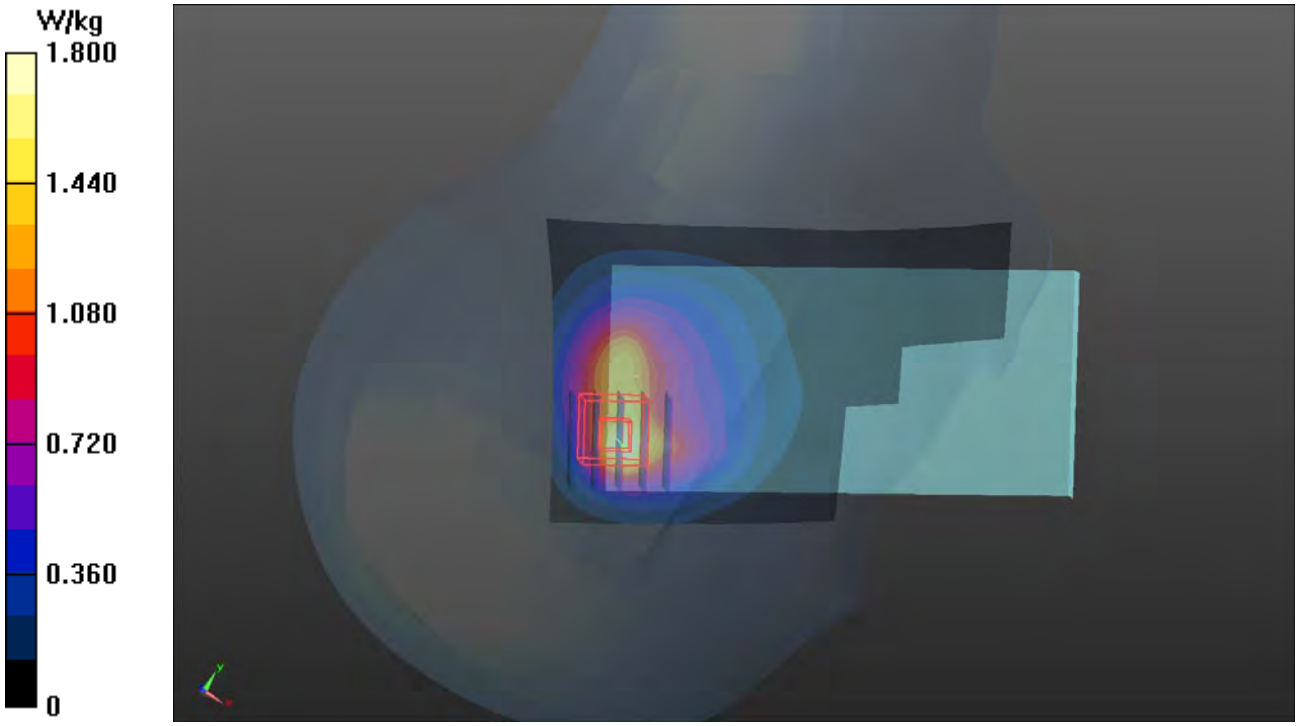

P09 LTE 41_QPSK20M_Right Cheek_Ch40240_Ant0_1RB_OS50

DUT: 170726C31

Communication System: LTE TDD CF0; Frequency: 2555 MHz;Duty Cycle: 1:1.58
Medium: H19T27N1_0823 Medium parameters used: f = 2555 MHz; σ = 1.977 S/m; ε_r = 38.742; ρ = 1000 kg/m^3
Ambient Temperature：23.7 ℃ ; Liquid Temperature：23.2 ℃

DASY5 Configuration:
- Probe: EX3DV4 - SN7351; ConvF(7.43, 7.43, 7.43); Calibrated: 2016/12/20;
- Sensor-Surface: 1.4mm (Mechanical Surface Detection)
- Electronics: DAE4 Sn861; Calibrated: 2017/05/22
- Phantom: Twin SAM Phantom_1496; Type: QD000P40CA;
- Measurement SW: DASY52, Version 52.8 (8); SEMCAD X Version 14.6.10 (7373)

- Area Scan (91x151x1): Interpolated grid: dx=1.200 mm, dy=1.200 mm
Maximum value of SAR (interpolated) = 0.0762 W/kg

- Zoom Scan (5x5x7)/Cube 0: Measurement grid: dx=8mm, dy=8mm, dz=5mm
Reference Value = 5.862 V/m; Power Drift = 0.08 dB
Peak SAR (extrapolated) = 0.0770 W/kg
SAR(1 g) = 0.046 W/kg; SAR(10 g) = 0.027 W/kg
Maximum value of SAR (measured) = 0.0632 W/kg

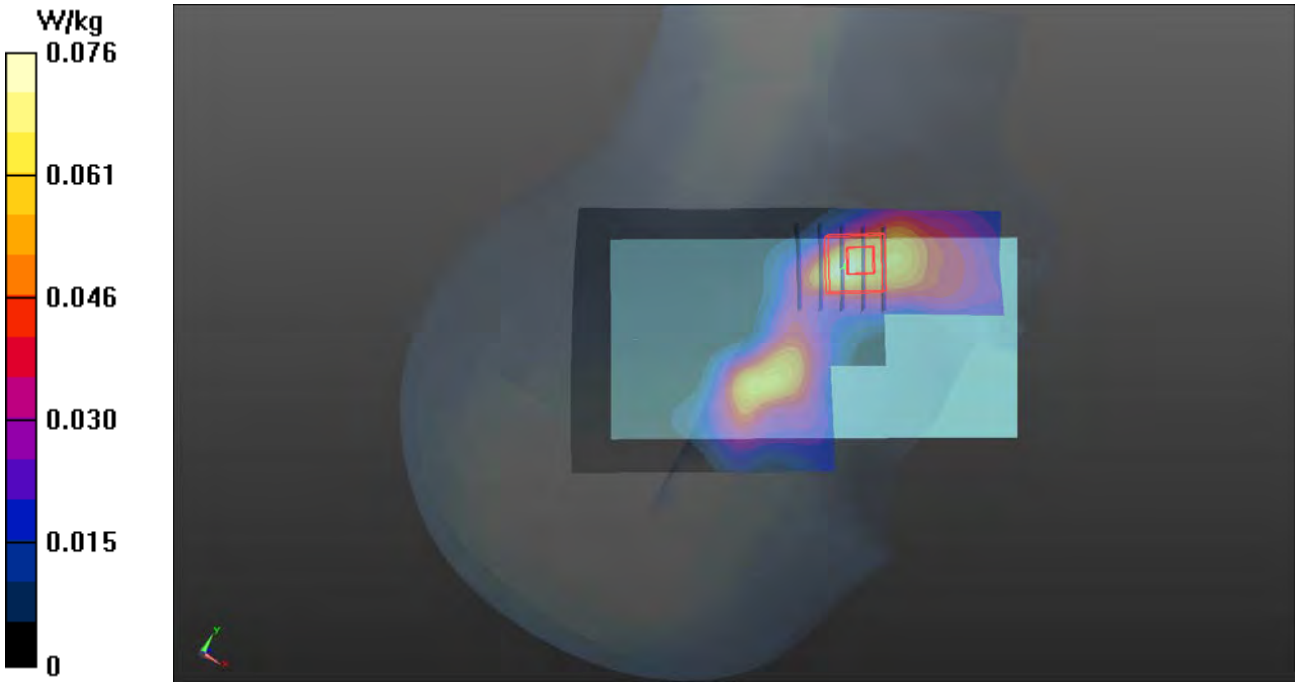

P10 2.4G WLAN_802.11b _Right Cheek_Ch6

DUT: 170726C31

Communication System: WLAN_2.4G; Frequency: 2437 MHz;Duty Cycle: 1:1
Medium: H19T27N2_0913 Medium parameters used: f = 2437 MHz; σ = 1.858 S/m; ε_r = 39.837; ρ = 1000 kg/m^3
Ambient Temperature：23.3 ℃ ; Liquid Temperature：23.1 ℃

DASY5 Configuration:
- Probe: EX3DV4 - SN3650; ConvF(7.58, 7.58, 7.58); Calibrated: 2017/07/24;
- Sensor-Surface: 1.4mm (Mechanical Surface Detection)
- Electronics: DAE4 Sn1277; Calibrated: 2017/07/20
- Phantom: Twin SAM Phantom_1496; Type: QD000P40CA;
- Measurement SW: DASY52, Version 52.8 (8); SEMCAD X Version 14.6.10 (7373)

- Area Scan (91x151x1): Interpolated grid: dx=1.200 mm, dy=1.200 mm
Maximum value of SAR (interpolated) = 0.587 W/kg

- Zoom Scan (5x5x7)/Cube 0: Measurement grid: dx=8mm, dy=8mm, dz=5mm
Reference Value = 15.08 V/m; Power Drift = 0.11 dB
Peak SAR (extrapolated) = 0.680 W/kg
SAR(1 g) = 0.321 W/kg; SAR(10 g) = 0.133 W/kg
Maximum value of SAR (measured) = 0.513 W/kg

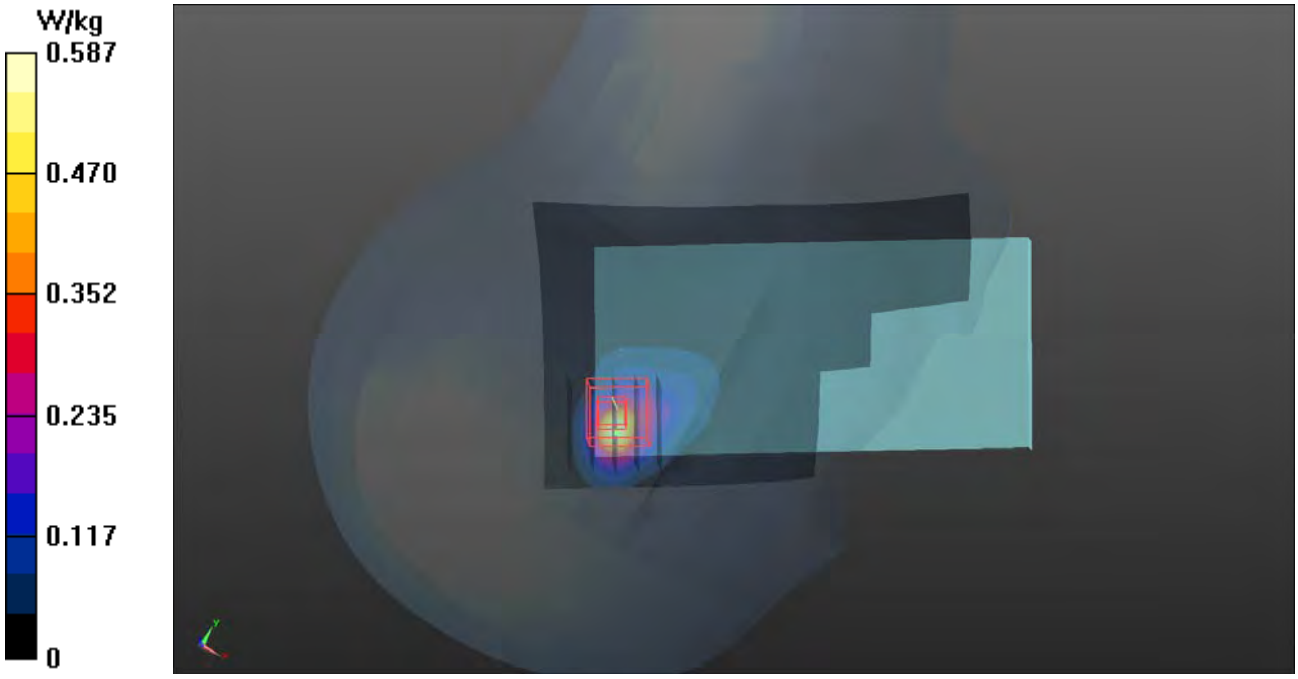

P11 5.3G WLAN_802.11n HT40 _Right Cheek_Ch62

DUT: 170726C31

Communication System: WLAN_5G; Frequency: 5310 MHz;Duty Cycle: 1:1
Medium: H34T60N1_0913 Medium parameters used: f = 5310 MHz; σ = 4.677 S/m; ε_r = 34.466; ρ = 1000 kg/m^3
Ambient Temperature：23.3 ℃ ; Liquid Temperature：23.1 ℃

DASY5 Configuration:
- Probe: EX3DV4 - SN3650; ConvF(5.6, 5.6, 5.6); Calibrated: 2017/07/24;
- Sensor-Surface: 1.4mm (Mechanical Surface Detection)
- Electronics: DAE4 Sn1277; Calibrated: 2017/07/20
- Phantom: Twin SAM Phantom_1496; Type: QD000P40CA;
- Measurement SW: DASY52, Version 52.8 (8); SEMCAD X Version 14.6.10 (7373)

- Area Scan (101x181x1): Interpolated grid: dx=1.000 mm, dy=1.000 mm
Maximum value of SAR (interpolated) = 1.15 W/kg

- Zoom Scan (6x6x12)/Cube 0: Measurement grid: dx=5mm, dy=5mm, dz=2mm
Reference Value = 15.38 V/m; Power Drift = -0.18 dB
Peak SAR (extrapolated) = 2.33 W/kg
SAR(1 g) = 0.429 W/kg; SAR(10 g) = 0.093 W/kg
Maximum value of SAR (measured) = 1.16 W/kg

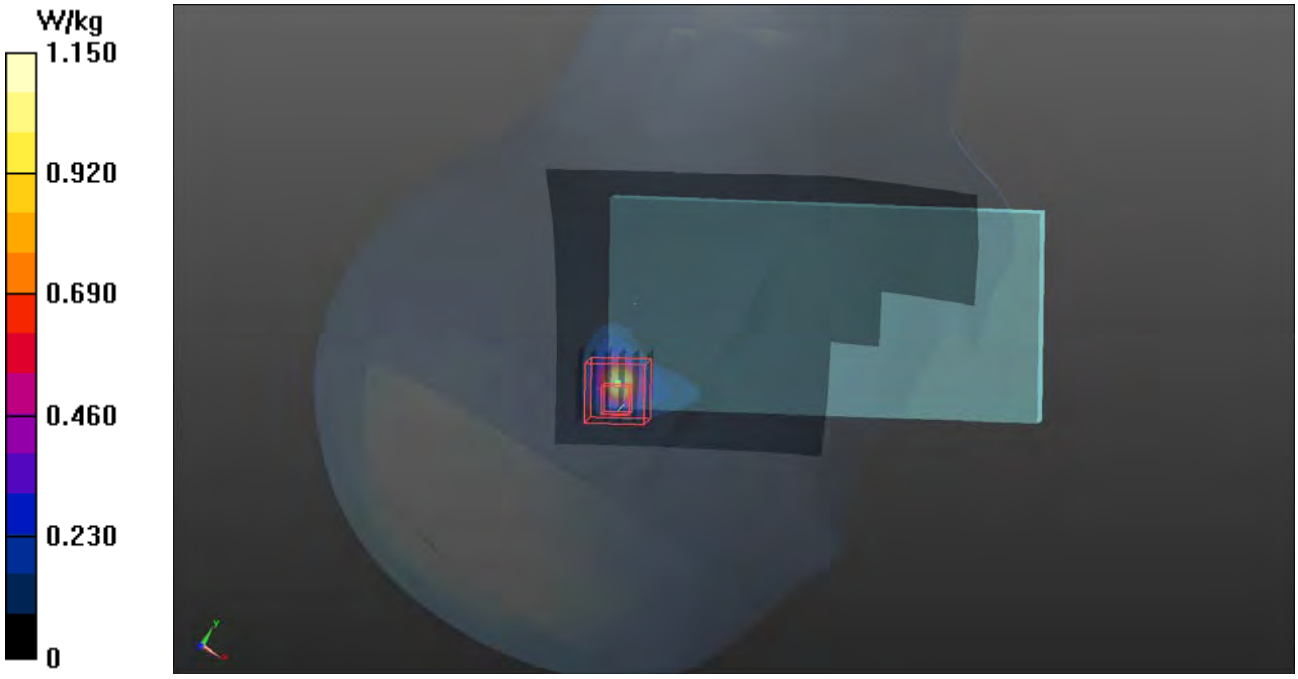

P12 5.6G WLAN_802.11n HT40 _Right Cheek_Ch110

DUT: 170726C31

Communication System: WLAN_5G; Frequency: 5550 MHz;Duty Cycle: 1:1
Medium: H34T60N1_0913 Medium parameters used: f = 5550 MHz; σ = 4.907 S/m; ε_r = 34.157; ρ = 1000 kg/m^3
Ambient Temperature：23.7 ℃ ; Liquid Temperature：23.2 ℃

DASY5 Configuration:
- Probe: EX3DV4 - SN3650; ConvF(4.9, 4.9, 4.9); Calibrated: 2017/07/24;
- Sensor-Surface: 1.4mm (Mechanical Surface Detection)
- Electronics: DAE4 Sn1277; Calibrated: 2017/07/20
- Phantom: Twin SAM Phantom_1496; Type: QD000P40CA;
- Measurement SW: DASY52, Version 52.8 (8); SEMCAD X Version 14.6.10 (7373)

- Area Scan (101x181x1): Interpolated grid: dx=1.000 mm, dy=1.000 mm
Maximum value of SAR (interpolated) = 1.29 W/kg

- Zoom Scan (6x6x12)/Cube 0: Measurement grid: dx=5mm, dy=5mm, dz=2mm
Reference Value = 15.66 V/m; Power Drift = -0.16 dB
Peak SAR (extrapolated) = 2.32 W/kg
SAR(1 g) = 0.457 W/kg; SAR(10 g) = 0.101 W/kg
Maximum value of SAR (measured) = 1.34 W/kg

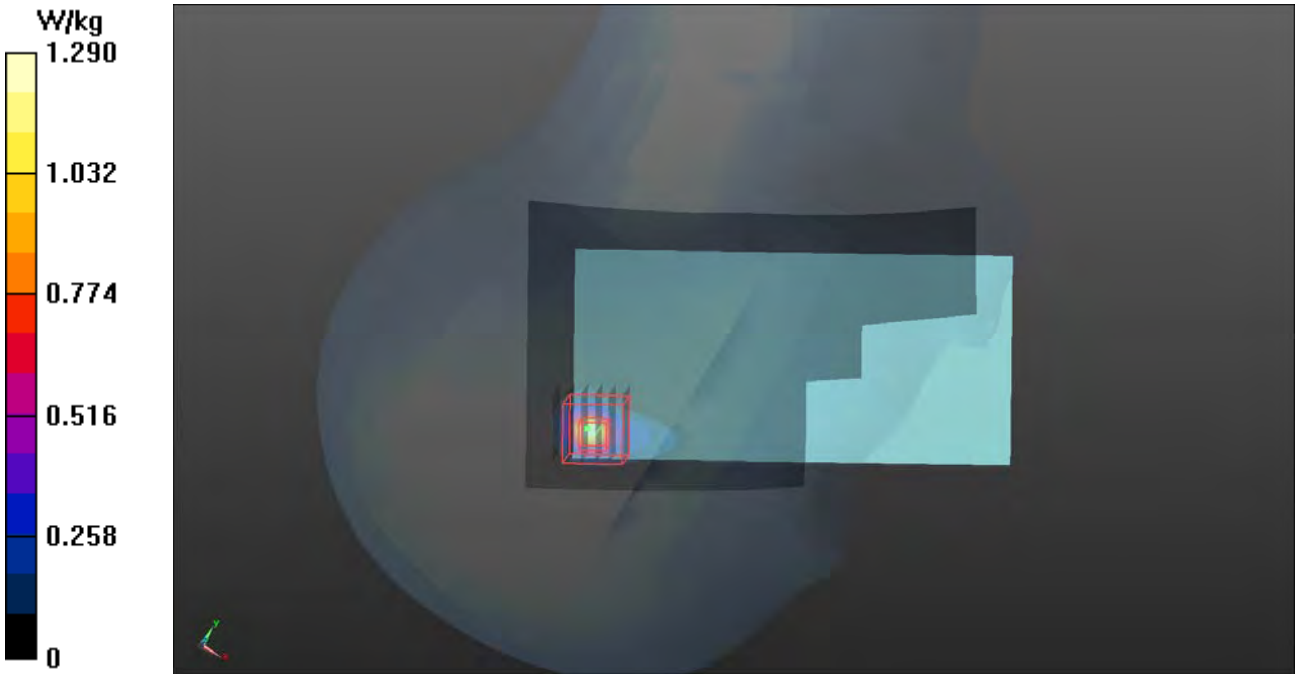

P13 5.8G WLAN_802.11n HT40 _Right Cheek_Ch159

DUT: 170726C31

Communication System: WLAN_5G; Frequency: 5795 MHz;Duty Cycle: 1:1
Medium: H34T60N1_0913 Medium parameters used: f = 5795 MHz; σ = 5.151 S/m; ε_r = 33.84; ρ = 1000 kg/m^3
Ambient Temperature：23.7 ℃ ; Liquid Temperature：23.2 ℃

DASY5 Configuration:
- Probe: EX3DV4 - SN3650; ConvF(4.94, 4.94, 4.94); Calibrated: 2017/07/24;
- Sensor-Surface: 1.4mm (Mechanical Surface Detection)
- Electronics: DAE4 Sn1277; Calibrated: 2017/07/20
- Phantom: Twin SAM Phantom_1496; Type: QD000P40CA;
- Measurement SW: DASY52, Version 52.8 (8); SEMCAD X Version 14.6.10 (7373)

- Area Scan (101x181x1): Interpolated grid: dx=1.000 mm, dy=1.000 mm
Maximum value of SAR (interpolated) = 1.05 W/kg

- Zoom Scan (6x6x12)/Cube 0: Measurement grid: dx=5mm, dy=5mm, dz=2mm
Reference Value = 13.81 V/m; Power Drift = -0.15 dB
Peak SAR (extrapolated) = 1.84 W/kg
SAR(1 g) = 0.383 W/kg; SAR(10 g) = 0.089 W/kg
Maximum value of SAR (measured) = 1.08 W/kg

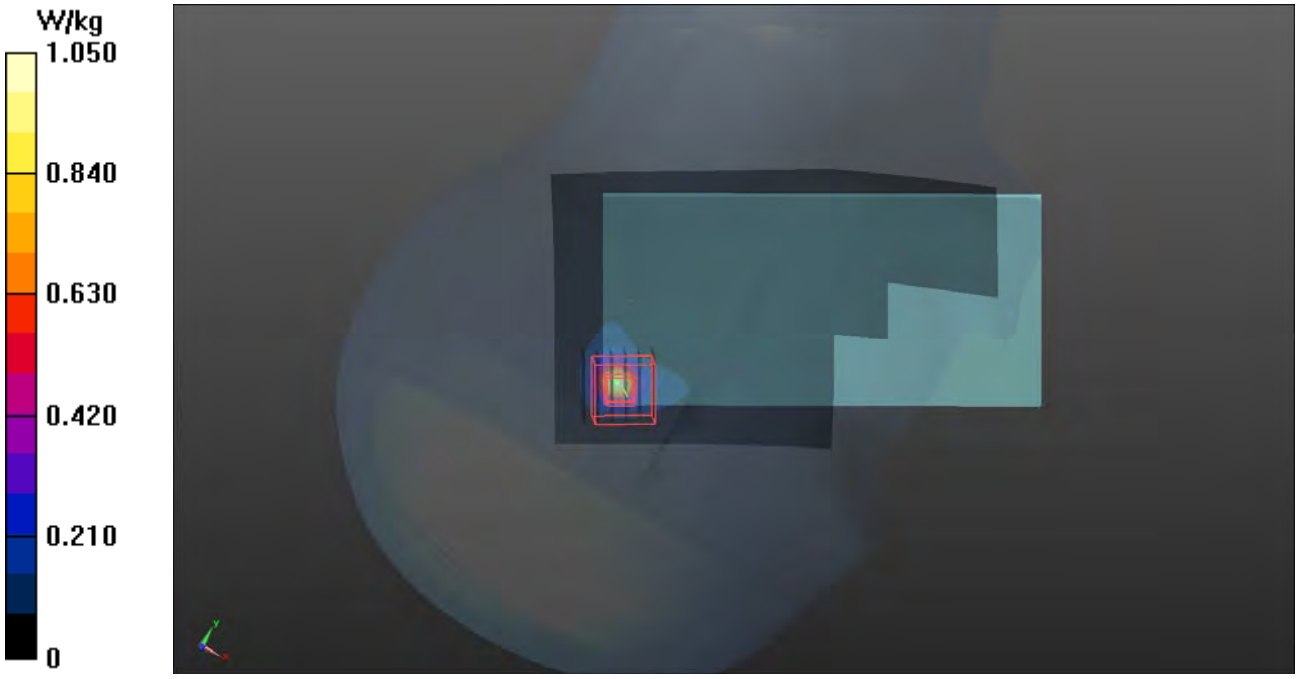

P14 GSM850_GPRS10_Front Face_1.5cm_Ch189_Ant1

DUT: 170706C19

Communication System: GPRS10; Frequency: 836.4 MHz;Duty Cycle: 1:4
Medium: B07T10N2_0907 Medium parameters used: f = 836.4 MHz; σ = 0.97 S/m; ε_r= 54.99; ρ = 1000 kg/m^3
Ambient Temperature：23.5 ℃ ; Liquid Temperature：23.1 ℃

DASY5 Configuration:
- Probe: EX3DV4 - SN7375; ConvF(9.94, 9.94, 9.94); Calibrated: 2016/12/08;
- Sensor-Surface: 1.4mm (Mechanical Surface Detection)
- Electronics: DAE4 Sn1431; Calibrated: 2017/03/20
- Phantom: Twin SAM Phantom_1485; Type: QD000P40;
- Measurement SW: DASY52, Version 52.8 (8); SEMCAD X Version 14.6.10 (7373)

- Area Scan (71x141x1): Interpolated grid: dx=1.500 mm, dy=1.500 mm
Maximum value of SAR (interpolated) = 0.914 W/kg

- Zoom Scan (5x5x7)/Cube 0: Measurement grid: dx=8mm, dy=8mm, dz=5mm
Reference Value = 31.55 V/m; Power Drift = -0.01 dB
Peak SAR (extrapolated) = 1.06 W/kg
SAR(1 g) = 0.729 W/kg; SAR(10 g) = 0.497 W/kg
Maximum value of SAR (measured) = 0.933 W/kg

- Zoom Scan (5x5x7)/Cube 1: Measurement grid: dx=8mm, dy=8mm, dz=5mm
Reference Value = 31.55 V/m; Power Drift = -0.01 dB
Peak SAR (extrapolated) = 0.939 W/kg
SAR(1 g) = 0.581 W/kg; SAR(10 g) = 0.355 W/kg
Maximum value of SAR (measured) = 0.813 W/kg

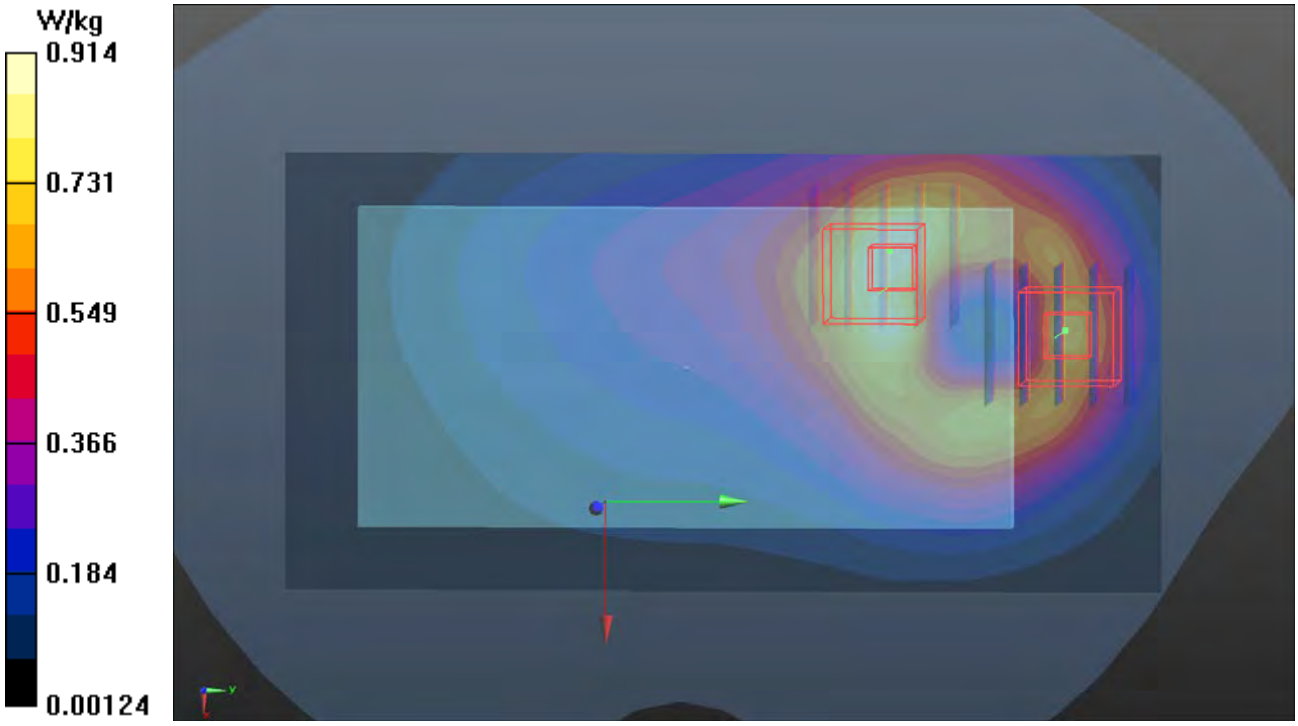

P15 GSM1900_GPRS10_Front Face_1.5cm_Ch512_Ant0

DUT: 170726C31

Communication System: GPRS10; Frequency: 1850.2 MHz;Duty Cycle: 1:4
Medium: B16T20N1_0911 Medium parameters used: f = 1850.2 MHz; σ = 1.545 S/m; ε_r = 52.895; ρ = 1000 kg/m^3
Ambient Temperature：23.8 ℃ ; Liquid Temperature：23.2 ℃

DASY5 Configuration:
- Probe: EX3DV4 - SN7375; ConvF(7.62, 7.62, 7.62); Calibrated: 2016/12/08;
- Sensor-Surface: 1.4mm (Mechanical Surface Detection)
- Electronics: DAE4 Sn1431; Calibrated: 2017/03/20
- Phantom: Twin SAM Phantom_1485; Type: QD000P40;
- Measurement SW: DASY52, Version 52.8 (8); SEMCAD X Version 14.6.10 (7373)

- Area Scan (71x141x1): Interpolated grid: dx=1.500 mm, dy=1.500 mm
Maximum value of SAR (interpolated) = 0.486 W/kg

- Zoom Scan (5x5x7)/Cube 0: Measurement grid: dx=8mm, dy=8mm, dz=5mm
Reference Value = 18.16 V/m; Power Drift = -0.13 dB
Peak SAR (extrapolated) = 0.671 W/kg
SAR(1 g) = 0.382 W/kg; SAR(10 g) = 0.208 W/kg
Maximum value of SAR (measured) = 0.565 W/kg

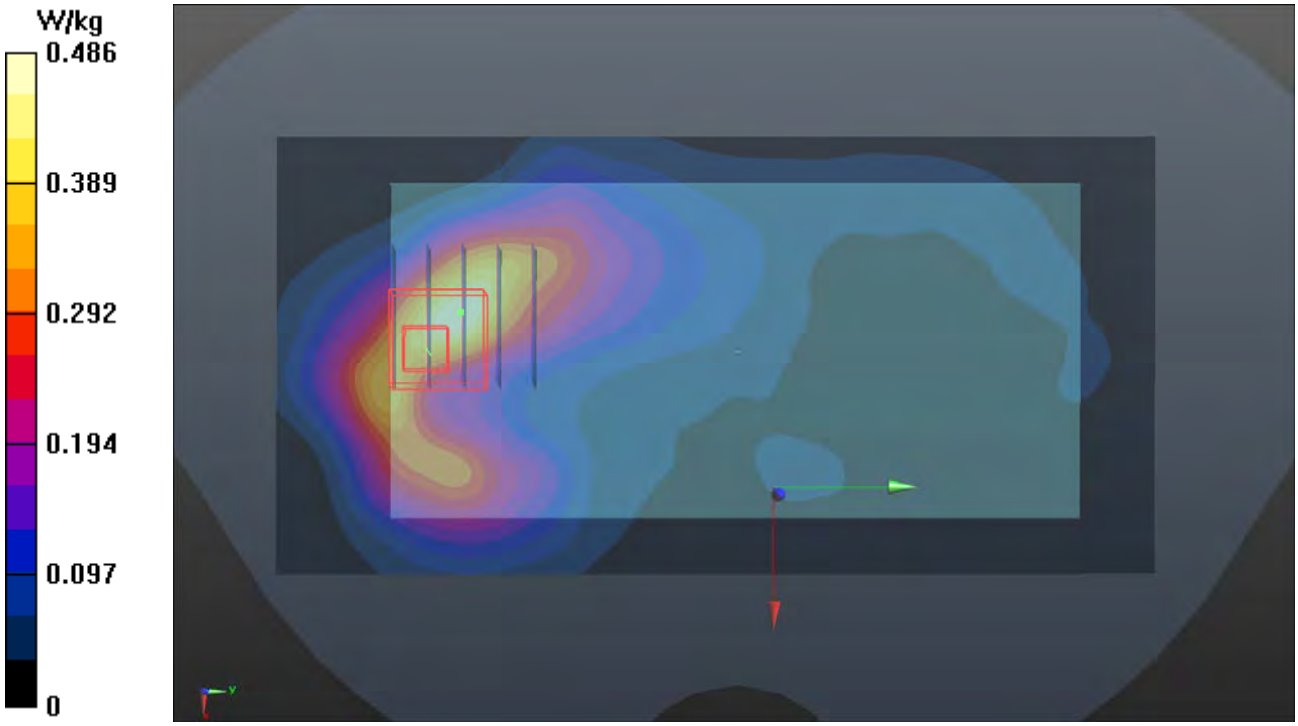

P16 WCDMA II_RMC12.2K_Front Face_1.5cm_Ch9538_Ant0

DUT: 170726C31

Communication System: WCDMA; Frequency: 1907.6 MHz;Duty Cycle: 1:1
Medium: B16T20N1_0911 Medium parameters used: f = 1908 MHz; σ = 1.592 S/m; ε_r = 52.798; ρ = 1000 kg/m^3
Ambient Temperature：23.8 ℃ ; Liquid Temperature：23.1 ℃

DASY5 Configuration:
- Probe: EX3DV4 - SN7375; ConvF(7.62, 7.62, 7.62); Calibrated: 2016/12/08;
- Sensor-Surface: 1.4mm (Mechanical Surface Detection)
- Electronics: DAE4 Sn1431; Calibrated: 2017/03/20
- Phantom: Twin SAM Phantom_1485; Type: QD000P40;
- Measurement SW: DASY52, Version 52.8 (8); SEMCAD X Version 14.6.10 (7373)

- Area Scan (71x141x1): Interpolated grid: dx=1.500 mm, dy=1.500 mm
Maximum value of SAR (interpolated) = 0.561 W/kg

- Zoom Scan (5x5x7)/Cube 0: Measurement grid: dx=8mm, dy=8mm, dz=5mm
Reference Value = 18.45 V/m; Power Drift = 0.03 dB
Peak SAR (extrapolated) = 0.812 W/kg
SAR(1 g) = 0.458 W/kg; SAR(10 g) = 0.244 W/kg
Maximum value of SAR (measured) = 0.675 W/kg

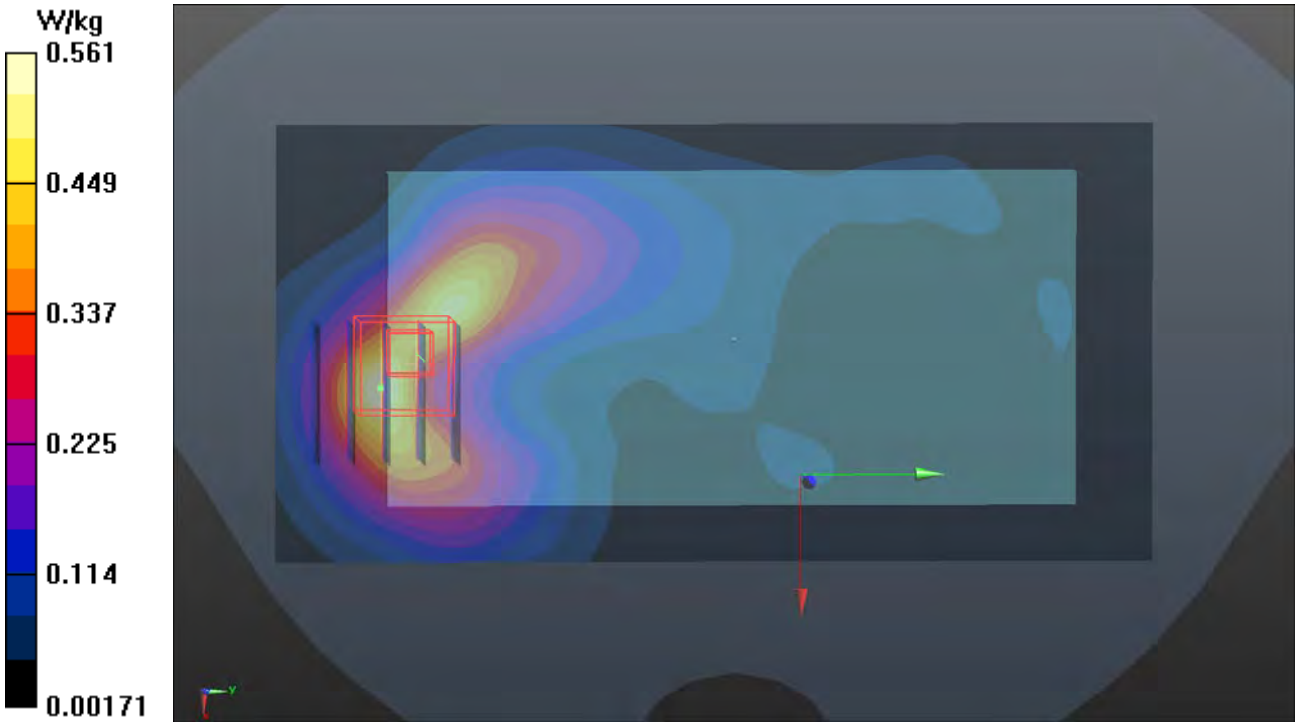

P17 WCDMA V_RMC12.2K_Front Face_1.5cm_Ch4182_Ant1

DUT: 170706C19

Communication System: WCDMA; Frequency: 836.4 MHz;Duty Cycle: 1:1
Medium: B07T10N2_0907 Medium parameters used: f = 836.4 MHz; σ = 0.97 S/m; ε_r= 54.99; ρ = 1000 kg/m^3
Ambient Temperature：23.5 ℃ ; Liquid Temperature：23.1 ℃

DASY5 Configuration:
- Probe: EX3DV4 - SN7375; ConvF(9.94, 9.94, 9.94); Calibrated: 2016/12/08;
- Sensor-Surface: 1.4mm (Mechanical Surface Detection)
- Electronics: DAE4 Sn1431; Calibrated: 2017/03/20
- Phantom: Twin SAM Phantom_1485; Type: QD000P40;
- Measurement SW: DASY52, Version 52.8 (8); SEMCAD X Version 14.6.10 (7373)

- Area Scan (71x141x1): Interpolated grid: dx=1.500 mm, dy=1.500 mm
Maximum value of SAR (interpolated) = 0.502 W/kg

- Zoom Scan (5x5x7)/Cube 0: Measurement grid: dx=8mm, dy=8mm, dz=5mm
Reference Value = 23.28 V/m; Power Drift = -0.05 dB
Peak SAR (extrapolated) = 0.577 W/kg
SAR(1 g) = 0.391 W/kg; SAR(10 g) = 0.266 W/kg
Maximum value of SAR (measured) = 0.504 W/kg

- Zoom Scan (5x5x7)/Cube 1: Measurement grid: dx=8mm, dy=8mm, dz=5mm
Reference Value = 23.28 V/m; Power Drift = -0.05 dB
Peak SAR (extrapolated) = 0.513 W/kg
SAR(1 g) = 0.313 W/kg; SAR(10 g) = 0.190 W/kg
Maximum value of SAR (measured) = 0.441 W/kg

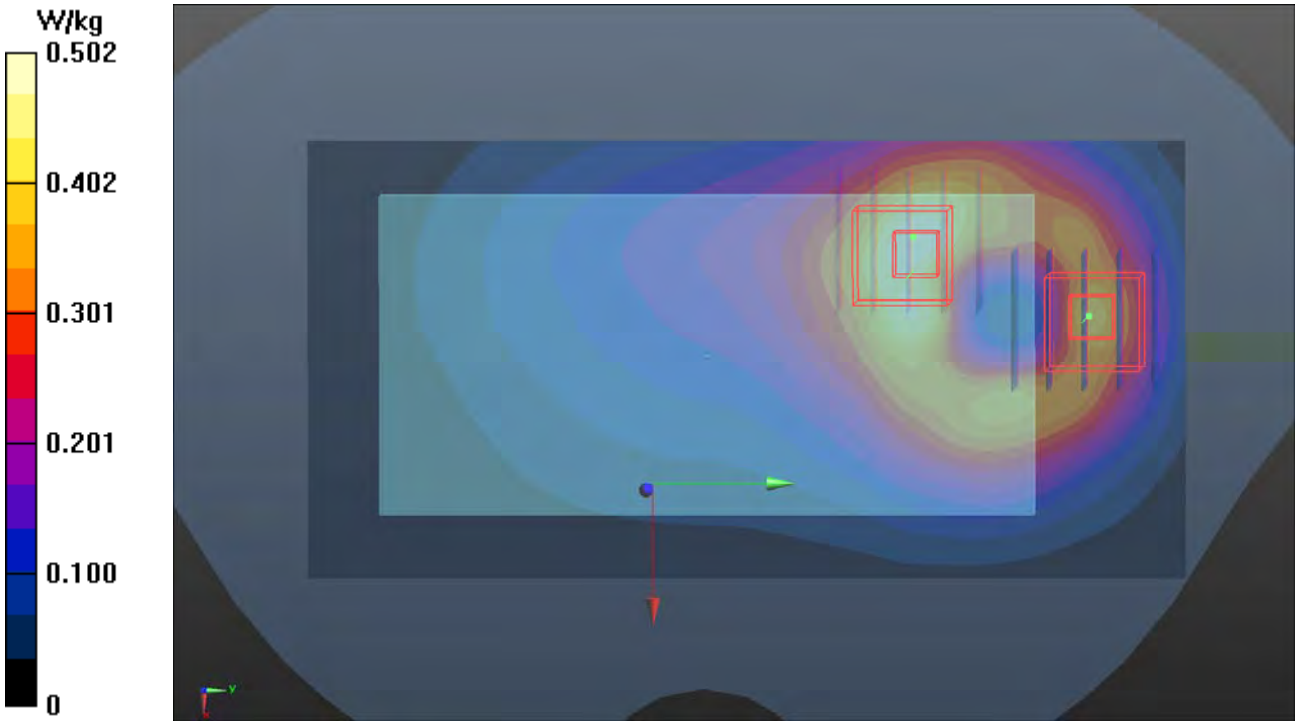

P18 LTE 2_QPSK20M_Front Face_1.5cm_Ch18900_Ant0_1RB_OS0

DUT: 170726C31

Communication System: LTE; Frequency: 1880 MHz;Duty Cycle: 1:1
Medium: B16T20N1_0911 Medium parameters used: f = 1880 MHz; σ = 1.57 S/m; ε_r = 52.85; ρ = 1000 kg/m^3
Ambient Temperature：23.8 ℃ ; Liquid Temperature：23.1 ℃

DASY5 Configuration:
- Probe: EX3DV4 - SN7375; ConvF(7.62, 7.62, 7.62); Calibrated: 2016/12/08;
- Sensor-Surface: 1.4mm (Mechanical Surface Detection)
- Electronics: DAE4 Sn1431; Calibrated: 2017/03/20
- Phantom: Twin SAM Phantom_1485; Type: QD000P40;
- Measurement SW: DASY52, Version 52.8 (8); SEMCAD X Version 14.6.10 (7373)

- Area Scan (71x141x1): Interpolated grid: dx=1.500 mm, dy=1.500 mm
Maximum value of SAR (interpolated) = 0.541 W/kg

- Zoom Scan (5x5x7)/Cube 0: Measurement grid: dx=8mm, dy=8mm, dz=5mm
Reference Value = 18.98 V/m; Power Drift = -0.15 dB
Peak SAR (extrapolated) = 0.812 W/kg
SAR(1 g) = 0.466 W/kg; SAR(10 g) = 0.247 W/kg
Maximum value of SAR (measured) = 0.681 W/kg

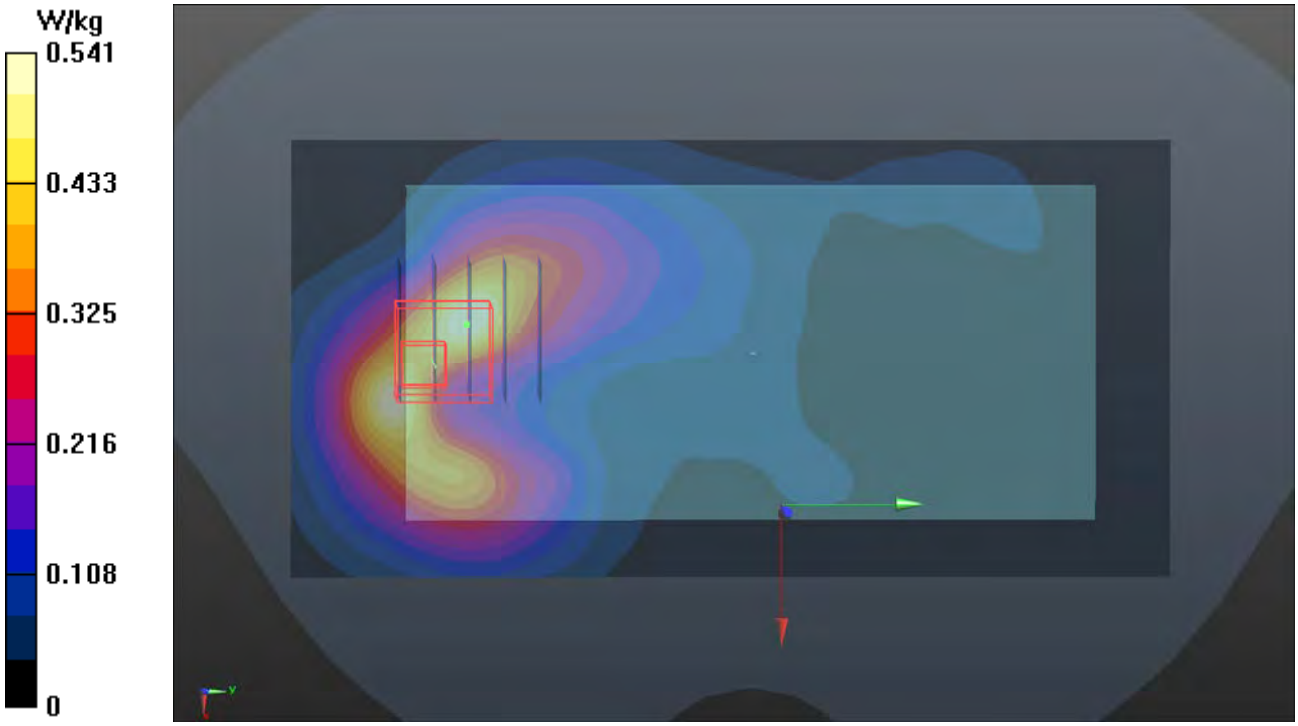

P19 LTE 5_QPSK10M_Front Face_1.5cm_Ch20600_Ant1_1RB_OS0

DUT: 170706C19

Communication System: LTE; Frequency: 844 MHz;Duty Cycle: 1:1
Medium: B07T10N2_0907 Medium parameters used: f = 844 MHz; σ = 0.976 S/m; ε_r = 54.927; ρ = 1000 kg/m^3
Ambient Temperature：23.5 ℃ ; Liquid Temperature：23.1 ℃

DASY5 Configuration:
- Probe: EX3DV4 - SN7375; ConvF(9.94, 9.94, 9.94); Calibrated: 2016/12/08;
- Sensor-Surface: 1.4mm (Mechanical Surface Detection)
- Electronics: DAE4 Sn1431; Calibrated: 2017/03/20
- Phantom: Twin SAM Phantom_1485; Type: QD000P40;
- Measurement SW: DASY52, Version 52.8 (8); SEMCAD X Version 14.6.10 (7373)

- Area Scan (71x141x1): Interpolated grid: dx=1.500 mm, dy=1.500 mm
Maximum value of SAR (interpolated) = 0.557 W/kg

- Zoom Scan (5x5x7)/Cube 0: Measurement grid: dx=8mm, dy=8mm, dz=5mm
Reference Value = 24.47 V/m; Power Drift = -0.06 dB
Peak SAR (extrapolated) = 0.632 W/kg
SAR(1 g) = 0.426 W/kg; SAR(10 g) = 0.289 W/kg
Maximum value of SAR (measured) = 0.553 W/kg

- Zoom Scan (5x5x7)/Cube 1: Measurement grid: dx=8mm, dy=8mm, dz=5mm
Reference Value = 24.47 V/m; Power Drift = -0.06 dB
Peak SAR (extrapolated) = 0.595 W/kg
SAR(1 g) = 0.361 W/kg; SAR(10 g) = 0.219 W/kg
Maximum value of SAR (measured) = 0.502 W/kg

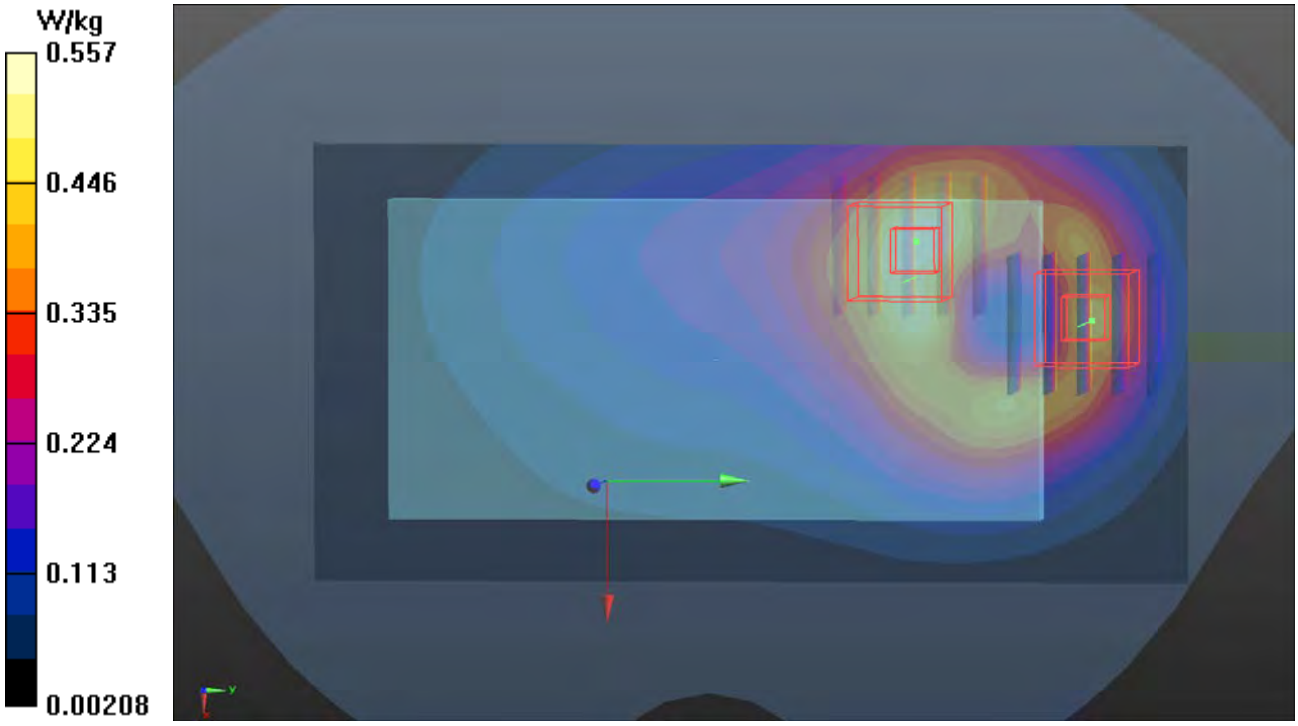

P20 LTE 7_QPSK20M_Rear Face_1.5cm_Ch21350_Ant0_1RB_OS50

DUT: 170726C31

Communication System: LTE; Frequency: 2560 MHz;Duty Cycle: 1:1
Medium: B19T27N5_0823 Medium parameters used: f = 2560 MHz; σ = 2.127 S/m; ε_r = 50.97; ρ = 1000 kg/m^3
Ambient Temperature：23.5 ℃ ; Liquid Temperature：23.3 ℃

DASY5 Configuration:
- Probe: EX3DV4 - SN3650; ConvF(7.14, 7.14, 7.14); Calibrated: 2016/07/25;
- Sensor-Surface: 1.4mm (Mechanical Surface Detection)
- Electronics: DAE4 Sn1277; Calibrated: 2016/07/22
- Phantom: Twin SAM Phantom_1485; Type: QD000P40;
- Measurement SW: DASY52, Version 52.8 (8); SEMCAD X Version 14.6.10 (7373)

- Area Scan (91x171x1): Interpolated grid: dx=1.200 mm, dy=1.200 mm
Maximum value of SAR (interpolated) = 0.579 W/kg

- Zoom Scan (5x5x7)/Cube 0: Measurement grid: dx=8mm, dy=8mm, dz=5mm
Reference Value = 16.55 V/m; Power Drift = -0.02 dB
Peak SAR (extrapolated) = 0.710 W/kg
SAR(1 g) = 0.393 W/kg; SAR(10 g) = 0.230 W/kg
Maximum value of SAR (measured) = 0.585 W/kg

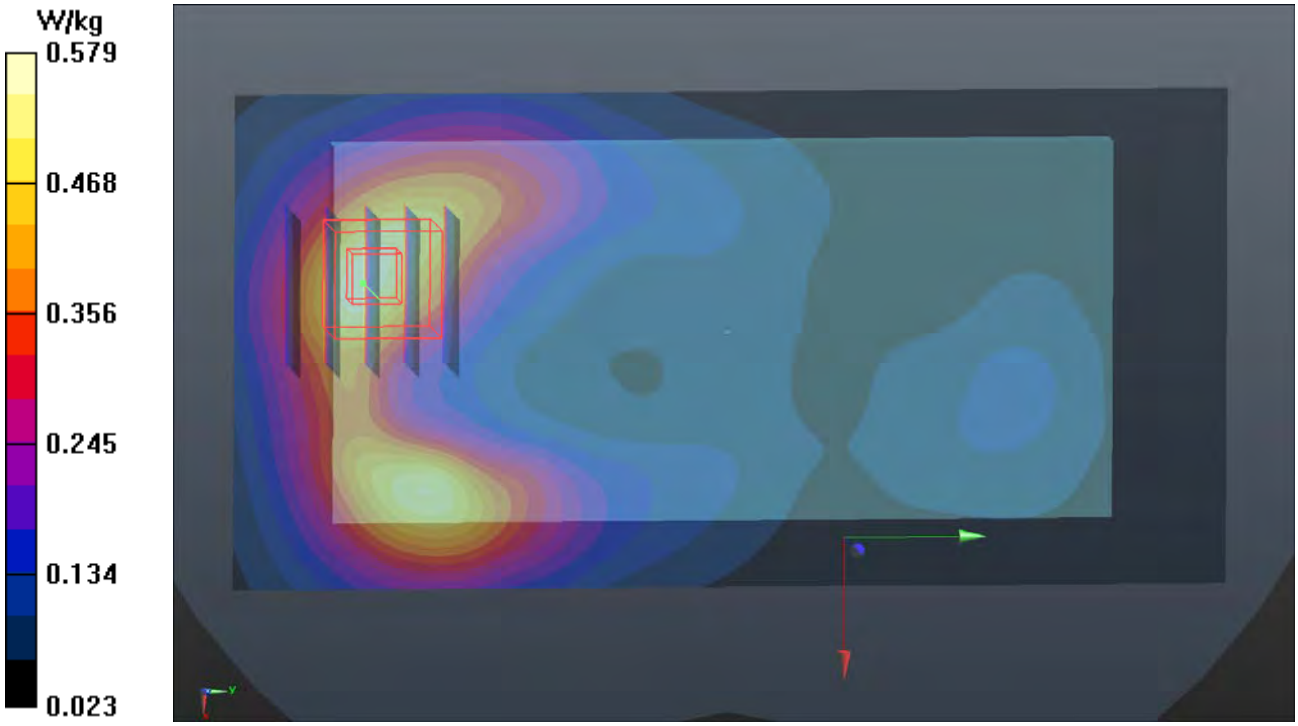

P21 LTE 26_QPSK15M_Front Face_1.5cm_Ch26865_Ant1_1RB_OS0

DUT: 170706C19

Communication System: LTE; Frequency: 831.5 MHz;Duty Cycle: 1:1
Medium: B07T10N2_0907 Medium parameters used: f = 831.5 MHz; σ = 0.965 S/m; ε_r = 55.021; ρ = 1000 kg/m^3
Ambient Temperature：23.5 ℃ ; Liquid Temperature：23.1 ℃

DASY5 Configuration:
- Probe: EX3DV4 - SN7375; ConvF(9.94, 9.94, 9.94); Calibrated: 2016/12/08;
- Sensor-Surface: 1.4mm (Mechanical Surface Detection)
- Electronics: DAE4 Sn1431; Calibrated: 2017/03/20
- Phantom: Twin SAM Phantom_1485; Type: QD000P40;
- Measurement SW: DASY52, Version 52.8 (8); SEMCAD X Version 14.6.10 (7373)

- Area Scan (71x141x1): Interpolated grid: dx=1.500 mm, dy=1.500 mm
Maximum value of SAR (interpolated) = 0.511 W/kg

- Zoom Scan (5x5x7)/Cube 0: Measurement grid: dx=8mm, dy=8mm, dz=5mm
Reference Value = 23.57 V/m; Power Drift = -0.05 dB
Peak SAR (extrapolated) = 0.583 W/kg
SAR(1 g) = 0.396 W/kg; SAR(10 g) = 0.270 W/kg
Maximum value of SAR (measured) = 0.511 W/kg

- Zoom Scan (5x5x7)/Cube 1: Measurement grid: dx=8mm, dy=8mm, dz=5mm
Reference Value = 23.57 V/m; Power Drift = -0.05 dB
Peak SAR (extrapolated) = 0.558 W/kg
SAR(1 g) = 0.338 W/kg; SAR(10 g) = 0.204 W/kg
Maximum value of SAR (measured) = 0.472 W/kg

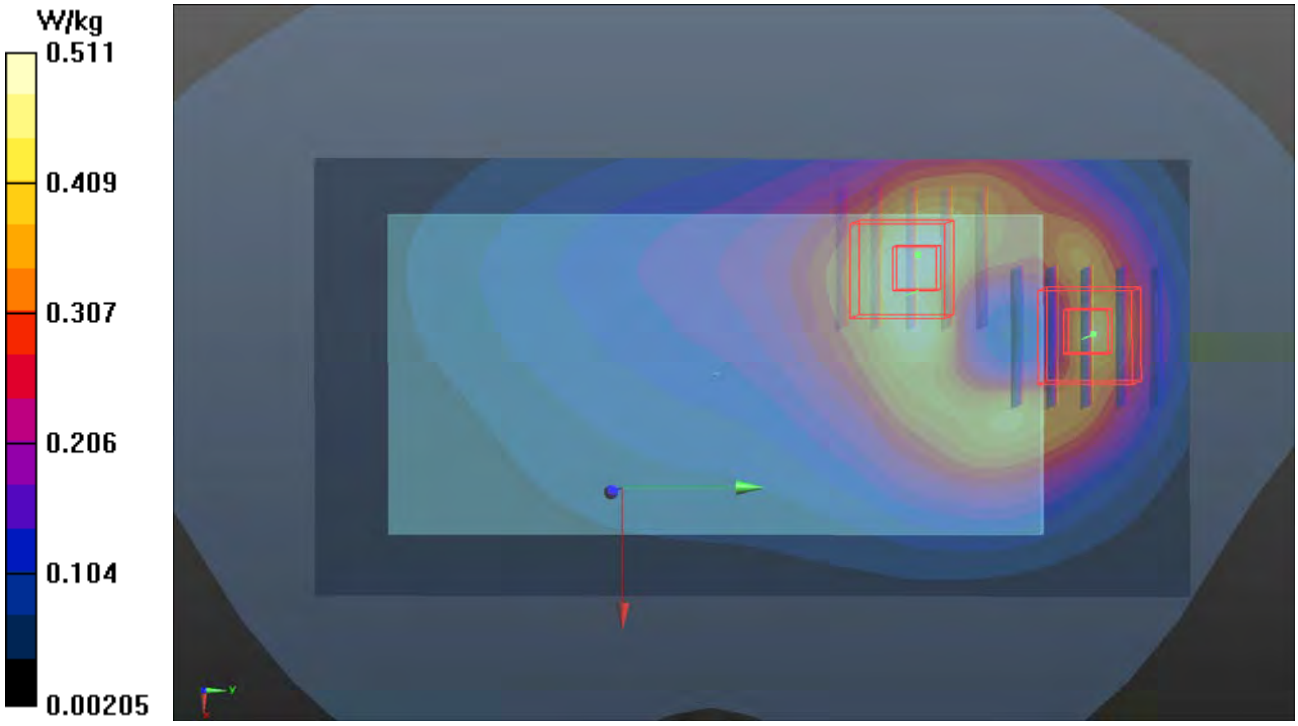

P22 LTE 41_QPSK20M_Rear Face_1.5cm_Ch40240_Ant0_1RB_OS50

DUT: 170726C31

Communication System: LTE; Frequency: 2555 MHz;Duty Cycle: 1:1.58
Medium: B19T27N5_0823 Medium parameters used: f = 2555 MHz; σ = 2.121 S/m; ε_r = 50.983; ρ = 1000 kg/m^3
Ambient Temperature：23.5 ℃ ; Liquid Temperature：23.3 ℃

DASY5 Configuration:
- Probe: EX3DV4 - SN3650; ConvF(7.14, 7.14, 7.14); Calibrated: 2016/07/25;
- Sensor-Surface: 1.4mm (Mechanical Surface Detection)
- Electronics: DAE4 Sn1277; Calibrated: 2016/07/22
- Phantom: Twin SAM Phantom_1485; Type: QD000P40;
- Measurement SW: DASY52, Version 52.8 (8); SEMCAD X Version 14.6.10 (7373)

- Area Scan (91x171x1): Interpolated grid: dx=1.200 mm, dy=1.200 mm
Maximum value of SAR (interpolated) = 0.335 W/kg

- Zoom Scan (5x5x7)/Cube 0: Measurement grid: dx=8mm, dy=8mm, dz=5mm
Reference Value = 12.93 V/m; Power Drift = -0.03 dB
Peak SAR (extrapolated) = 0.406 W/kg
SAR(1 g) = 0.222 W/kg; SAR(10 g) = 0.129 W/kg
Maximum value of SAR (measured) = 0.327 W/kg

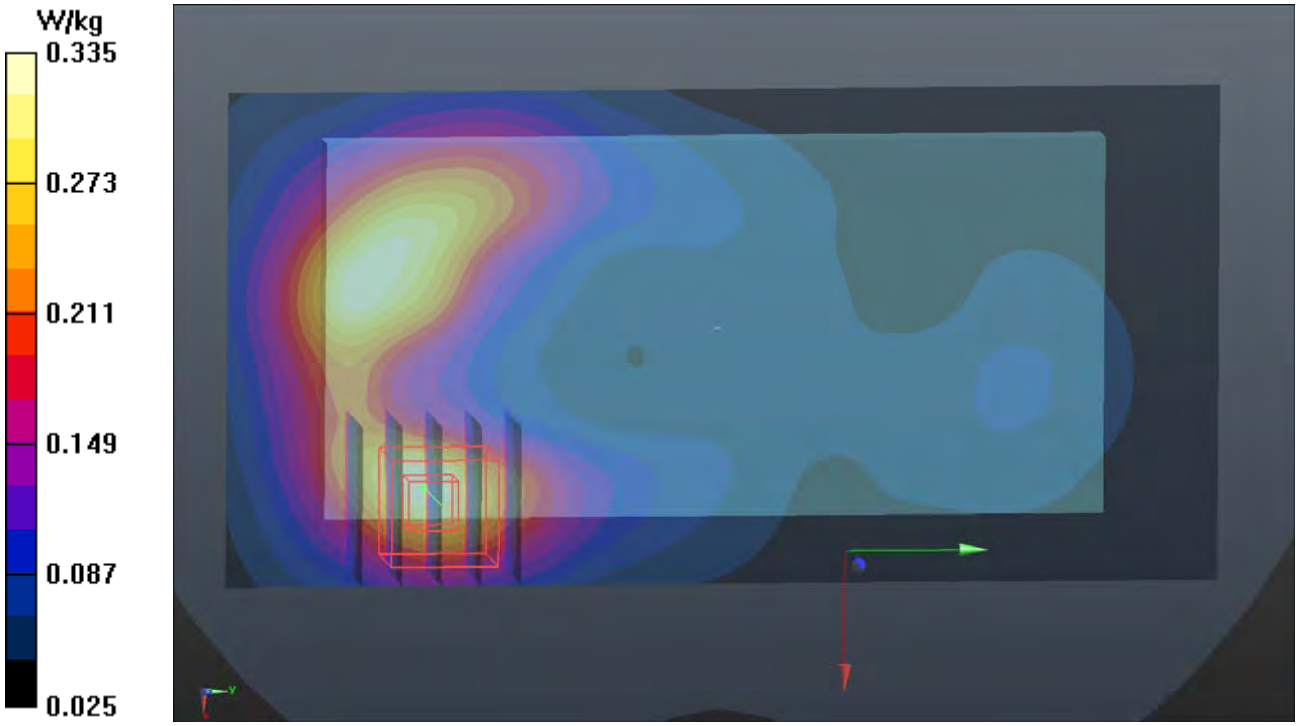

P23 2.4G WLAN_802.11b_Rear Face_1.5cm_Ch1

DUT: 170726C31

Communication System: WLAN_2.4G; Frequency: 2412 MHz;Duty Cycle: 1:1
Medium: B19T27N5_0911 Medium parameters used: f = 2412 MHz; σ = 1.954 S/m; ε_r = 51.627; ρ = 1000 kg/m^3
Ambient Temperature：23.8 ℃ ; Liquid Temperature：23.1 ℃

DASY5 Configuration:
- Probe: EX3DV4 - SN7375; ConvF(7.33, 7.33, 7.33); Calibrated: 2016/12/08;
- Sensor-Surface: 1.4mm (Mechanical Surface Detection)
- Electronics: DAE4 Sn1431; Calibrated: 2017/03/20
- Phantom: Twin SAM Phantom_1485; Type: QD000P40;
- Measurement SW: DASY52, Version 52.8 (8); SEMCAD X Version 14.6.10 (7373)

- Area Scan (71x171x1): Interpolated grid: dx=1.200 mm, dy=1.200 mm
Maximum value of SAR (interpolated) = 0.261 W/kg

- Zoom Scan (5x5x7)/Cube 0: Measurement grid: dx=8mm, dy=8mm, dz=5mm
Reference Value = 10.78 V/m; Power Drift = 0.01 dB
Peak SAR (extrapolated) = 0.333 W/kg
SAR(1 g) = 0.188 W/kg; SAR(10 g) = 0.098 W/kg
Maximum value of SAR (measured) = 0.276 W/kg

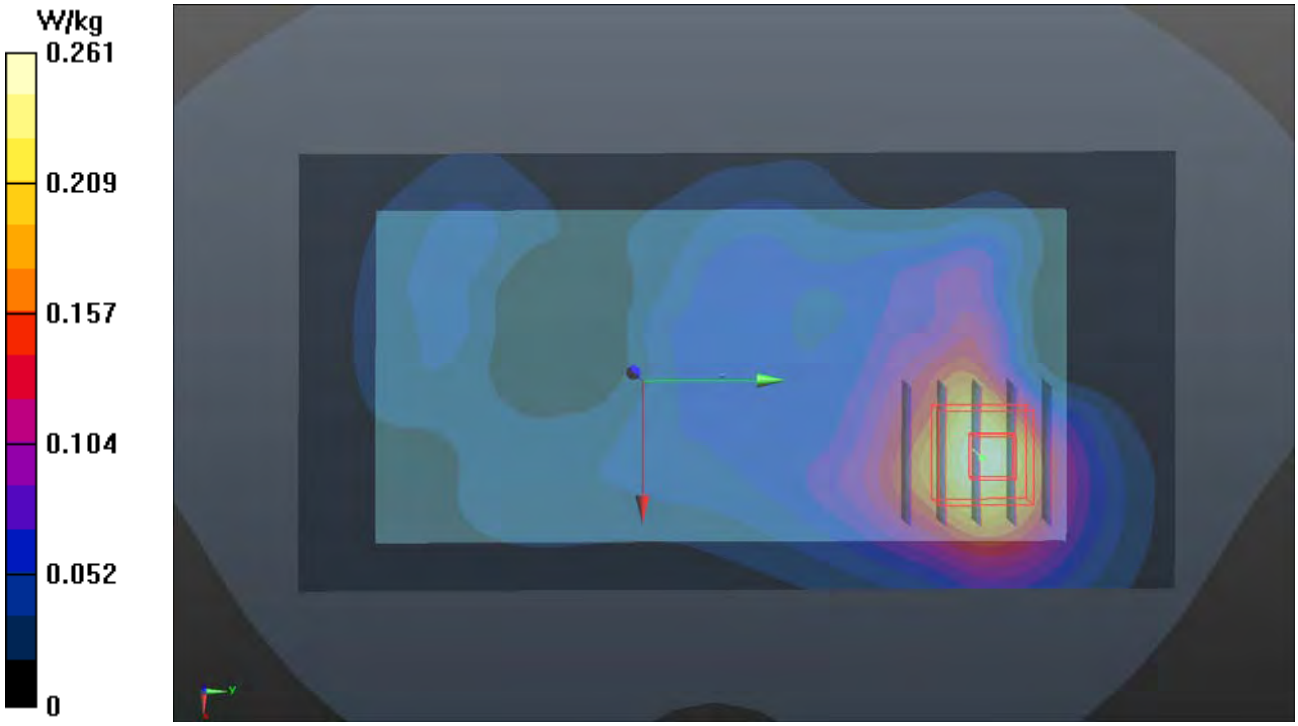

P25 5.3G WLAN_802.11n HT40_Front Face_1.5cm_Ch62

DUT: 170726C31

Communication System: WLAN_5G; Frequency: 5310 MHz;Duty Cycle: 1:1
Medium: B34T60N3_0911 Medium parameters used: f = 5310 MHz; σ = 5.56 S/m; ε_r = 46.803; ρ = 1000 kg/m^3
Ambient Temperature：23.8 ℃ ; Liquid Temperature：23.1 ℃

DASY5 Configuration:
- Probe: EX3DV4 - SN7375; ConvF(4.57, 4.57, 4.57); Calibrated: 2016/12/08;
- Sensor-Surface: 1.4mm (Mechanical Surface Detection)
- Electronics: DAE4 Sn1431; Calibrated: 2017/03/20
- Phantom: Twin SAM Phantom_1485; Type: QD000P40;
- Measurement SW: DASY52, Version 52.8 (8); SEMCAD X Version 14.6.10 (7373)

- Area Scan (101x201x1): Interpolated grid: dx=1.000 mm, dy=1.000 mm
Maximum value of SAR (interpolated) = 0.450 W/kg

- Zoom Scan (6x6x12)/Cube 0: Measurement grid: dx=5mm, dy=5mm, dz=2mm
Reference Value = 9.683 V/m; Power Drift = -0.08 dB
Peak SAR (extrapolated) = 0.881 W/kg
SAR(1 g) = 0.235 W/kg; SAR(10 g) = 0.079 W/kg
Maximum value of SAR (measured) = 0.544 W/kg

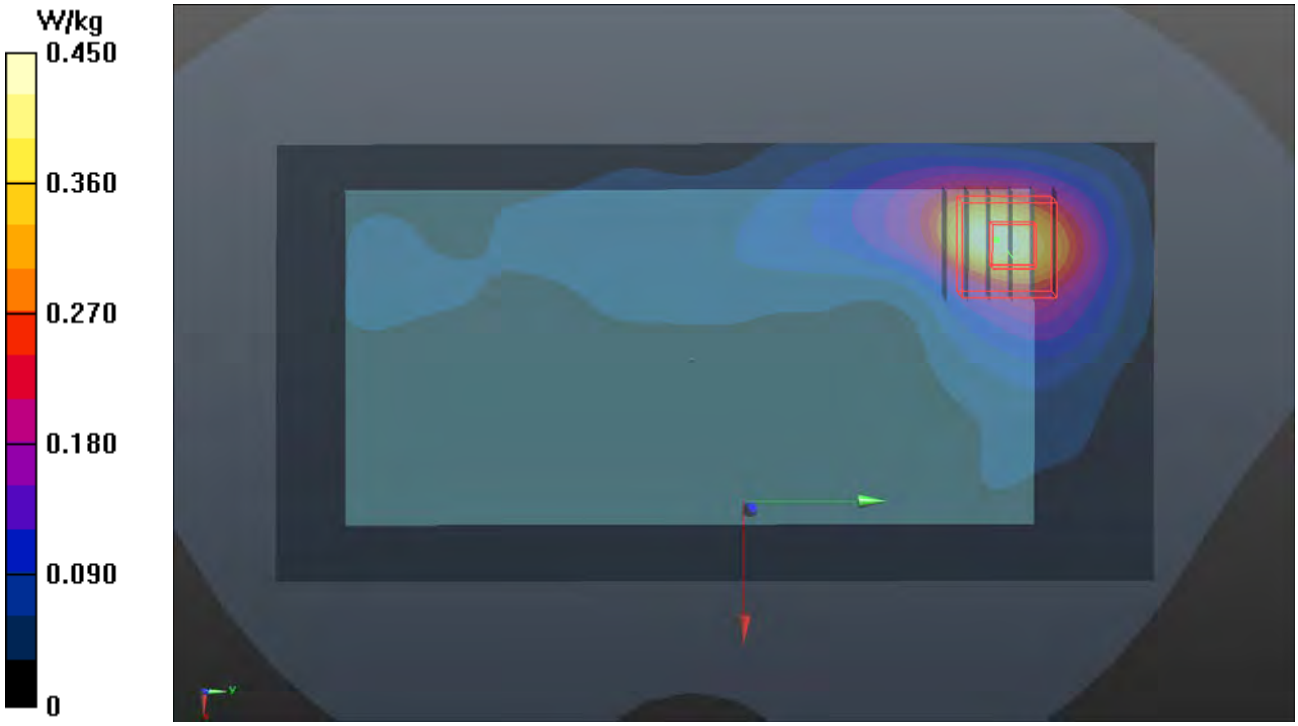

P26 5.6G WLAN_802.11n HT40_Front Face_1.5cm_Ch102

DUT: 170726C31

Communication System: WLAN_5G; Frequency: 5510 MHz;Duty Cycle: 1:1
Medium: B34T60N3_0911 Medium parameters used: f = 5510 MHz; σ = 5.807 S/m; ε_r = 46.458; ρ = 1000 kg/m^3
Ambient Temperature：23.8 ℃ ; Liquid Temperature：23.1 ℃

DASY5 Configuration:
- Probe: EX3DV4 - SN7375; ConvF(4.2, 4.2, 4.2); Calibrated: 2016/12/08;
- Sensor-Surface: 1.4mm (Mechanical Surface Detection)
- Electronics: DAE4 Sn1431; Calibrated: 2017/03/20
- Phantom: Twin SAM Phantom_1485; Type: QD000P40;
- Measurement SW: DASY52, Version 52.8 (8); SEMCAD X Version 14.6.10 (7373)

- Area Scan (101x201x1): Interpolated grid: dx=1.000 mm, dy=1.000 mm
Maximum value of SAR (interpolated) = 0.850 W/kg

- Zoom Scan (6x6x12)/Cube 0: Measurement grid: dx=5mm, dy=5mm, dz=2mm
Reference Value = 13.04 V/m; Power Drift = -0.10 dB
Peak SAR (extrapolated) = 1.68 W/kg
SAR(1 g) = 0.406 W/kg; SAR(10 g) = 0.142 W/kg
Maximum value of SAR (measured) = 0.921 W/kg

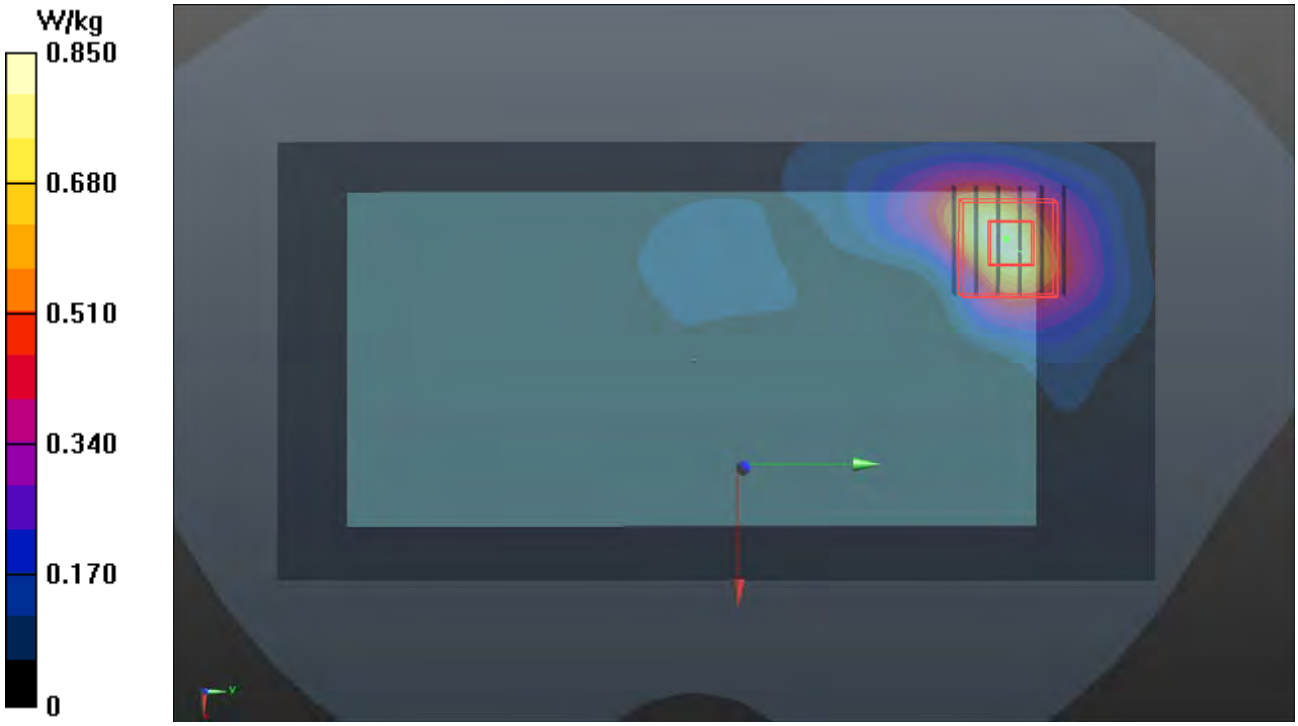

P27 5.8G WLAN_802.11n HT40_Front Face_1.5cm_Ch159

DUT: 170726C31

Communication System: WLAN_5G; Frequency: 5795 MHz;Duty Cycle: 1:1
Medium: B34T60N3_0911 Medium parameters used: f = 5795 MHz; σ = 6.21 S/m; ε_r = 45.996; ρ = 1000 kg/m^3
Ambient Temperature：23.8 ℃ ; Liquid Temperature：23.1 ℃

DASY5 Configuration:
- Probe: EX3DV4 - SN7375; ConvF(4.08, 4.08, 4.08); Calibrated: 2016/12/08;
- Sensor-Surface: 1.4mm (Mechanical Surface Detection)
- Electronics: DAE4 Sn1431; Calibrated: 2017/03/20
- Phantom: Twin SAM Phantom_1485; Type: QD000P40;
- Measurement SW: DASY52, Version 52.8 (8); SEMCAD X Version 14.6.10 (7373)

- Area Scan (101x201x1): Interpolated grid: dx=1.000 mm, dy=1.000 mm
Maximum value of SAR (interpolated) = 0.408 W/kg

- Zoom Scan (6x6x12)/Cube 0: Measurement grid: dx=5mm, dy=5mm, dz=2mm
Reference Value = 8.209 V/m; Power Drift = -0.13 dB
Peak SAR (extrapolated) = 0.711 W/kg
SAR(1 g) = 0.159 W/kg; SAR(10 g) = 0.054 W/kg
Maximum value of SAR (measured) = 0.457 W/kg

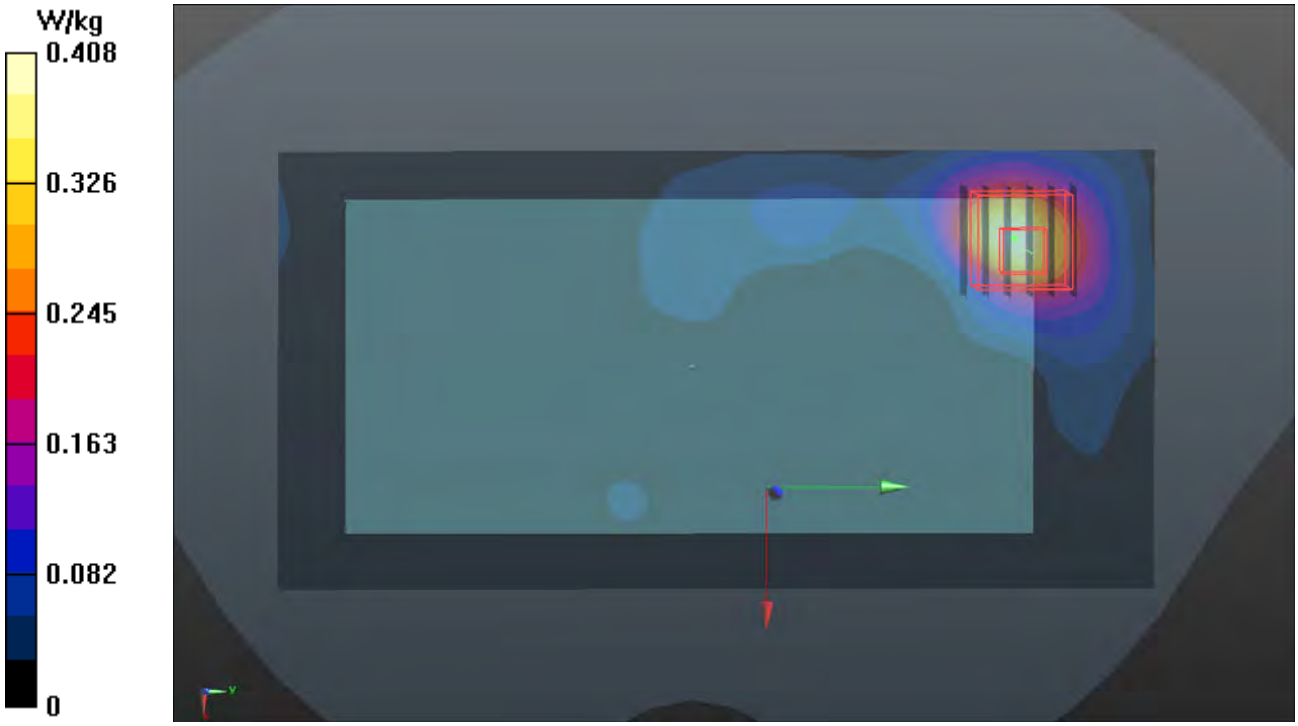

P28 Bluetooth_DH1_Rear Face_1cm_Ch0

DUT: 170425C26

Communication System: BT; Frequency: 2402 MHz;Duty Cycle: 1:1
Medium: B19T27N2_0719 Medium parameters used: f = 2402 MHz; σ = 1.948 S/m; ε_r = 50.69; ρ = 1000 kg/m^3
Ambient Temperature：23.8 ℃ ; Liquid Temperature：23.3 ℃

DASY5 Configuration:
- Probe: EX3DV4 - SN3753; ConvF(7.27, 7.27, 7.27); Calibrated: 2017/05/05;
- Sensor-Surface: 1.4mm (Mechanical Surface Detection)
- Electronics: DAE4 Sn916; Calibrated: 2016/12/15
- Phantom: Twin SAM Phantom_1496; Type: QD000P40CA;
- Measurement SW: DASY52, Version 52.8 (8); SEMCAD X Version 14.6.10 (7373)

- Area Scan (91x151x1): Interpolated grid: dx=1.200 mm, dy=1.200 mm
Maximum value of SAR (interpolated) = 0.0356 W/kg

- Zoom Scan (5x5x7)/Cube 0: Measurement grid: dx=8mm, dy=8mm, dz=5mm
Reference Value = 3.987 V/m; Power Drift = -0.02 dB
Peak SAR (extrapolated) = 0.0470 W/kg
SAR(1 g) = 0.029 W/kg; SAR(10 g) = 0.016 W/kg
Maximum value of SAR (measured) = 0.0393 W/kg

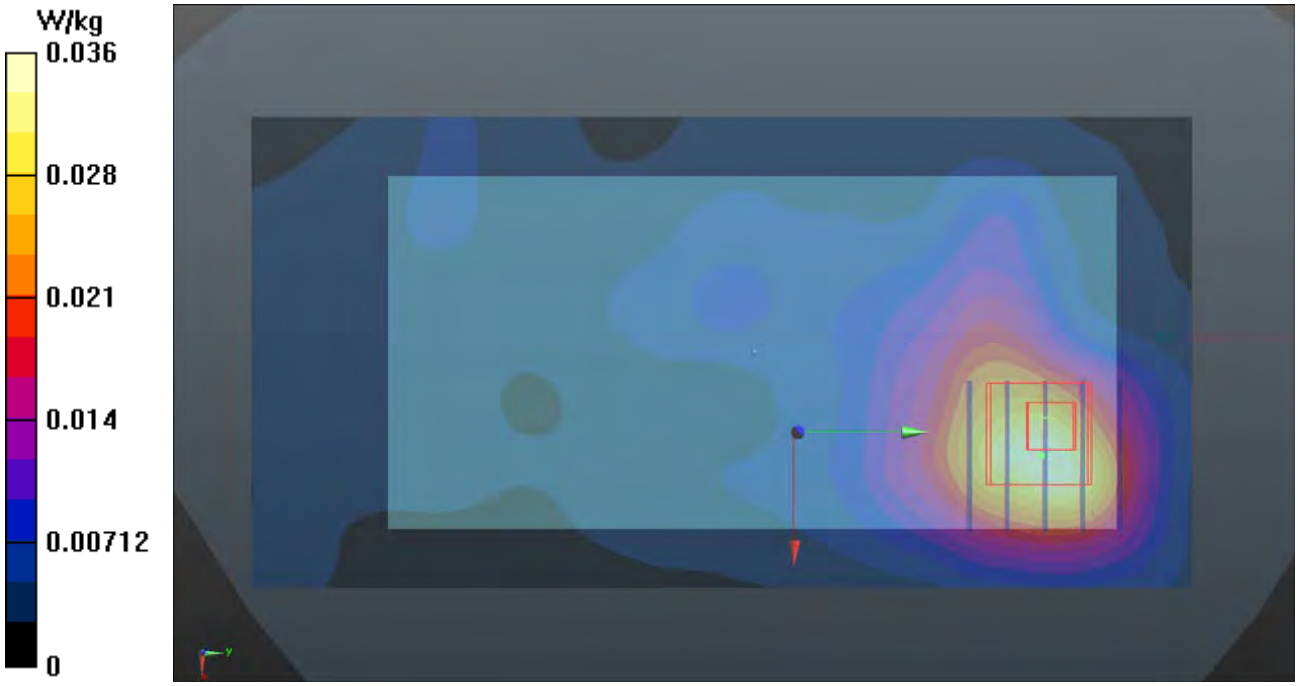

P29 GSM850_GPRS10_Front Face_1cm_Ch251_Ant0

DUT: 170726C31

Communication System: GPRS10; Frequency: 848.8 MHz;Duty Cycle: 1:4
Medium: B07T10N2_0822 Medium parameters used: f = 849 MHz; σ = 1.03 S/m; ε_r = 55.204; ρ = 1000 kg/m^3
Ambient Temperature：23.7 ℃ ; Liquid Temperature：23.2 ℃

DASY5 Configuration:
- Probe: EX3DV4 - SN7351; ConvF(10.31, 10.31, 10.31); Calibrated: 2016/12/20;
- Sensor-Surface: 1.4mm (Mechanical Surface Detection)
- Electronics: DAE4 Sn861; Calibrated: 2017/05/22
- Phantom: Twin SAM Phantom_1496; Type: QD000P40CA;
- Measurement SW: DASY52, Version 52.8 (8); SEMCAD X Version 14.6.10 (7373)

- Area Scan (71x141x1): Interpolated grid: dx=1.500 mm, dy=1.500 mm
Maximum value of SAR (interpolated) = 1.06 W/kg

- Zoom Scan (5x5x7)/Cube 0: Measurement grid: dx=8mm, dy=8mm, dz=5mm
Reference Value = 31.50 V/m; Power Drift = 0.01 dB
Peak SAR (extrapolated) = 1.45 W/kg
SAR(1 g) = 0.830 W/kg; SAR(10 g) = 0.476 W/kg
Maximum value of SAR (measured) = 1.21 W/kg

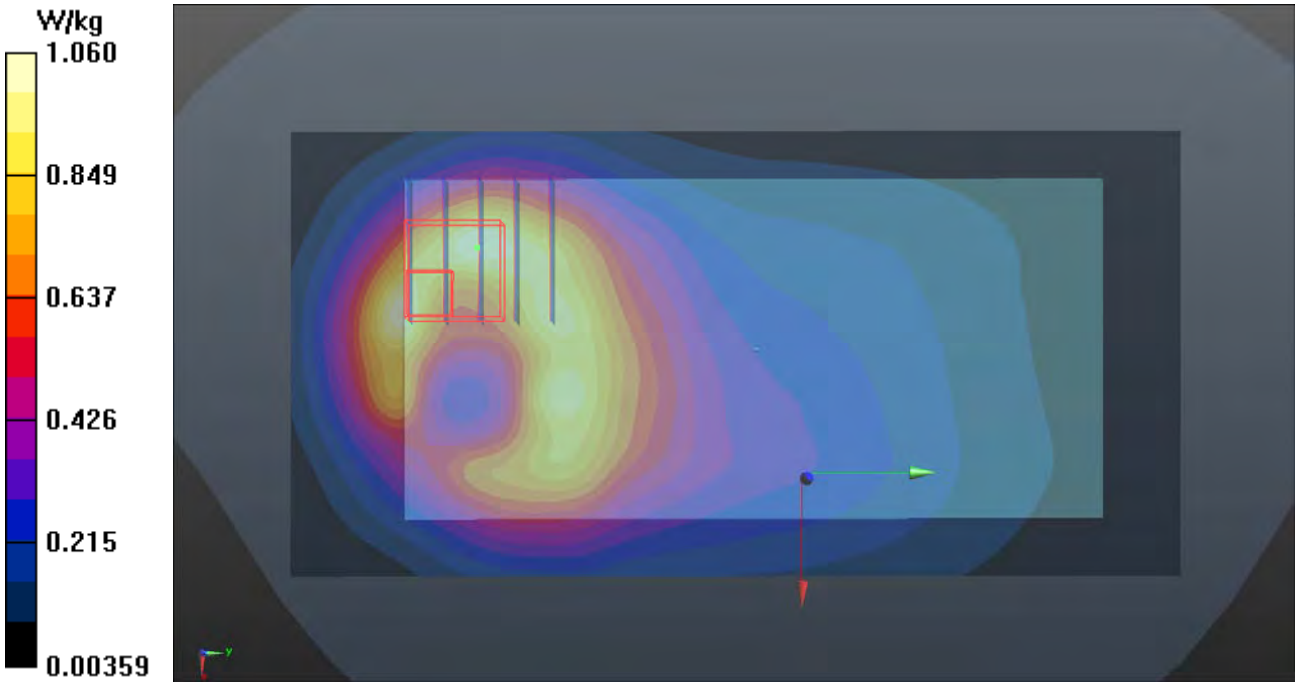

P30 GSM1900_GPRS10_Bottom Side_1cm_Ch512_Ant0

DUT: 170426C41

Communication System: GPRS10; Frequency: 1850.2 MHz;Duty Cycle: 1:4
Medium: B16T20N2_0817 Medium parameters used: f = 1850.2 MHz; σ = 1.536 S/m; ε_r = 51.221; ρ = 1000 kg/m^3
Ambient Temperature：23.7 ℃ ; Liquid Temperature：23.2 ℃

DASY5 Configuration:
- Probe: EX3DV4 - SN7351; ConvF(8.14, 8.14, 8.14); Calibrated: 2016/12/20;
- Sensor-Surface: 1.4mm (Mechanical Surface Detection)
- Electronics: DAE4 Sn861; Calibrated: 2017/05/22
- Phantom: Twin SAM Phantom_1496; Type: QD000P40CA;
- Measurement SW: DASY52, Version 52.8 (8); SEMCAD X Version 14.6.10 (7373)

- Area Scan (61x71x1): Interpolated grid: dx=1.500 mm, dy=1.500 mm
Maximum value of SAR (interpolated) = 1.58 W/kg

- Zoom Scan (5x5x7)/Cube 0: Measurement grid: dx=8mm, dy=8mm, dz=5mm
Reference Value = 32.30 V/m; Power Drift = -0.09 dB
Peak SAR (extrapolated) = 1.78 W/kg
SAR(1 g) = 0.952 W/kg; SAR(10 g) = 0.517 W/kg
Maximum value of SAR (measured) = 1.49 W/kg

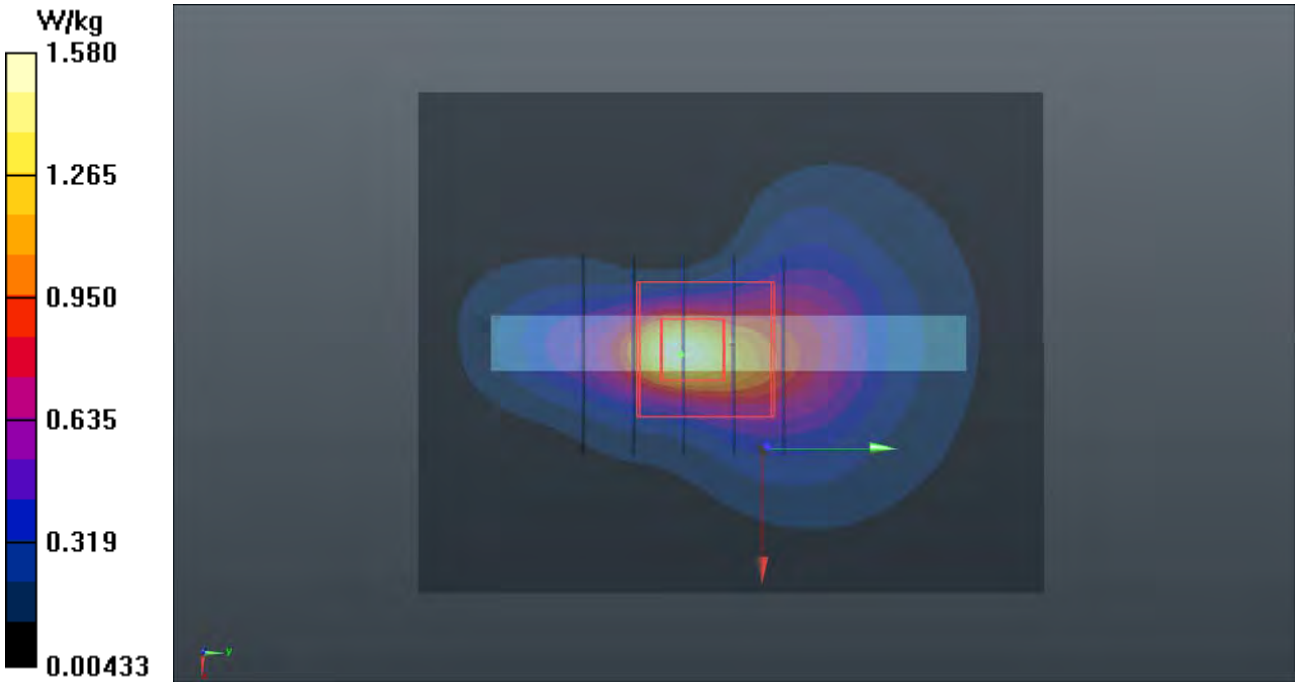

P31 WCDMA II_RMC12.2K_Bottom Side_1cm_Ch9400_Ant0

DUT: 170426C41

Communication System: WCDMA; Frequency: 1880 MHz;Duty Cycle: 1:1
Medium: B16T20N2_0817 Medium parameters used: f = 1880 MHz; σ = 1.563 S/m; ε_r = 51.166; ρ = 1000 kg/m^3
Ambient Temperature：23.7 ℃ ; Liquid Temperature：23.2 ℃

DASY5 Configuration:
- Probe: EX3DV4 - SN7351; ConvF(8.14, 8.14, 8.14); Calibrated: 2016/12/20;
- Sensor-Surface: 1.4mm (Mechanical Surface Detection)
- Electronics: DAE4 Sn861; Calibrated: 2017/05/22
- Phantom: Twin SAM Phantom_1496; Type: QD000P40CA;
- Measurement SW: DASY52, Version 52.8 (8); SEMCAD X Version 14.6.10 (7373)

- Area Scan (61x71x1): Interpolated grid: dx=1.500 mm, dy=1.500 mm
Maximum value of SAR (interpolated) = 1.71 W/kg

- Zoom Scan (5x5x7)/Cube 0: Measurement grid: dx=8mm, dy=8mm, dz=5mm
Reference Value = 33.48 V/m; Power Drift = -0.07 dB
Peak SAR (extrapolated) = 1.93 W/kg
SAR(1 g) = 1.07 W/kg; SAR(10 g) = 0.548 W/kg
Maximum value of SAR (measured) = 1.64 W/kg

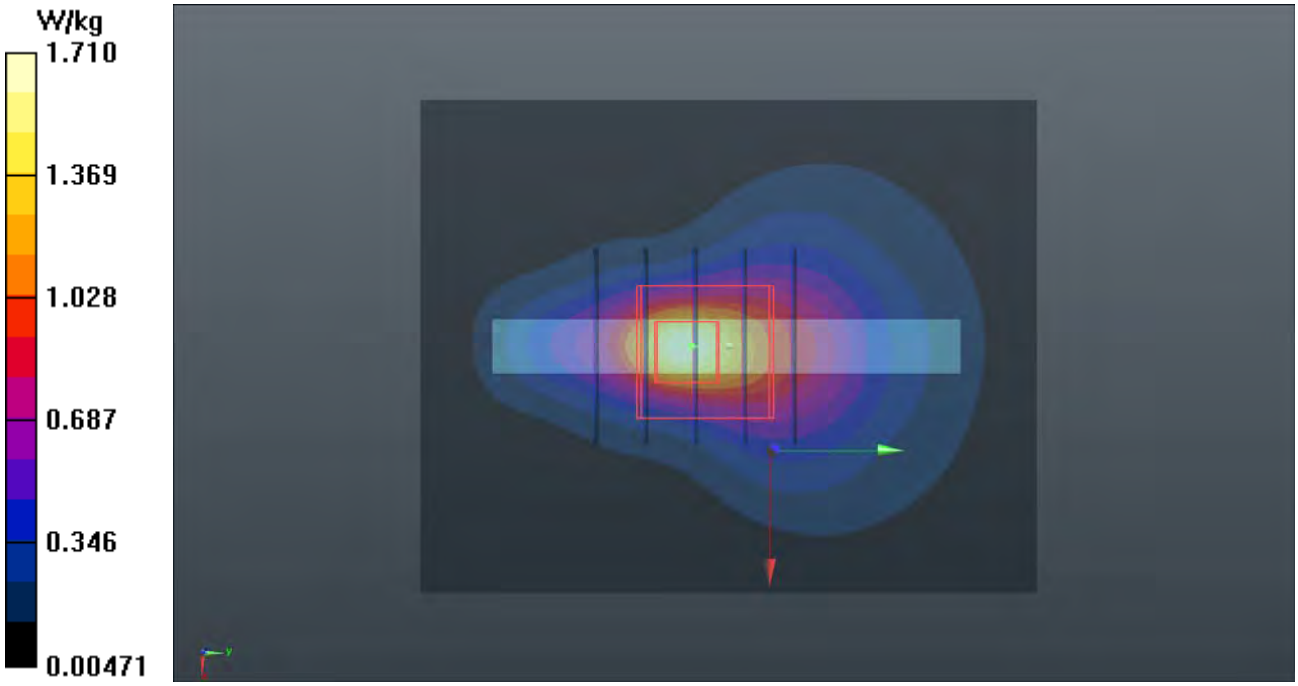

P32 WCDMA V_RMC12.2K_Front Face_1cm_Ch4182_Ant1

DUT: 170706C19

Communication System: WCDMA; Frequency: 836.4 MHz;Duty Cycle: 1:1
Medium: B07T10N1_0908 Medium parameters used: f = 836.4 MHz; σ = 0.985 S/m; ε_r = 55.338; ρ = 1000 kg/m^3
Ambient Temperature：23.6 ℃ ; Liquid Temperature：23.2 ℃

DASY5 Configuration:
- Probe: ET3DV6 - SN1790; ConvF(6.66, 6.66, 6.66); Calibrated: 2017/05/24;
- Sensor-Surface: 4mm (Mechanical Surface Detection)
- Electronics: DAE4 Sn917; Calibrated: 2017/01/06
- Phantom: Twin SAM Phantom_1485; Type: QD000P40;
- Measurement SW: DASY52, Version 52.8 (8); SEMCAD X Version 14.6.10 (7373)

- Area Scan (71x141x1): Interpolated grid: dx=1.500 mm, dy=1.500 mm
Maximum value of SAR (interpolated) = 0.985 W/kg

- Zoom Scan (5x5x7)/Cube 0: Measurement grid: dx=8mm, dy=8mm, dz=5mm
Reference Value = 32.31 V/m; Power Drift = -0.03 dB
Peak SAR (extrapolated) = 1.59 W/kg
SAR(1 g) = 0.899 W/kg; SAR(10 g) = 0.501 W/kg
Maximum value of SAR (measured) = 1.01 W/kg

- Zoom Scan (5x5x7)/Cube 1: Measurement grid: dx=8mm, dy=8mm, dz=5mm
Reference Value = 32.31 V/m; Power Drift = -0.03 dB
Peak SAR (extrapolated) = 1.09 W/kg
SAR(1 g) = 0.727 W/kg; SAR(10 g) = 0.472 W/kg
Maximum value of SAR (measured) = 0.770 W/kg

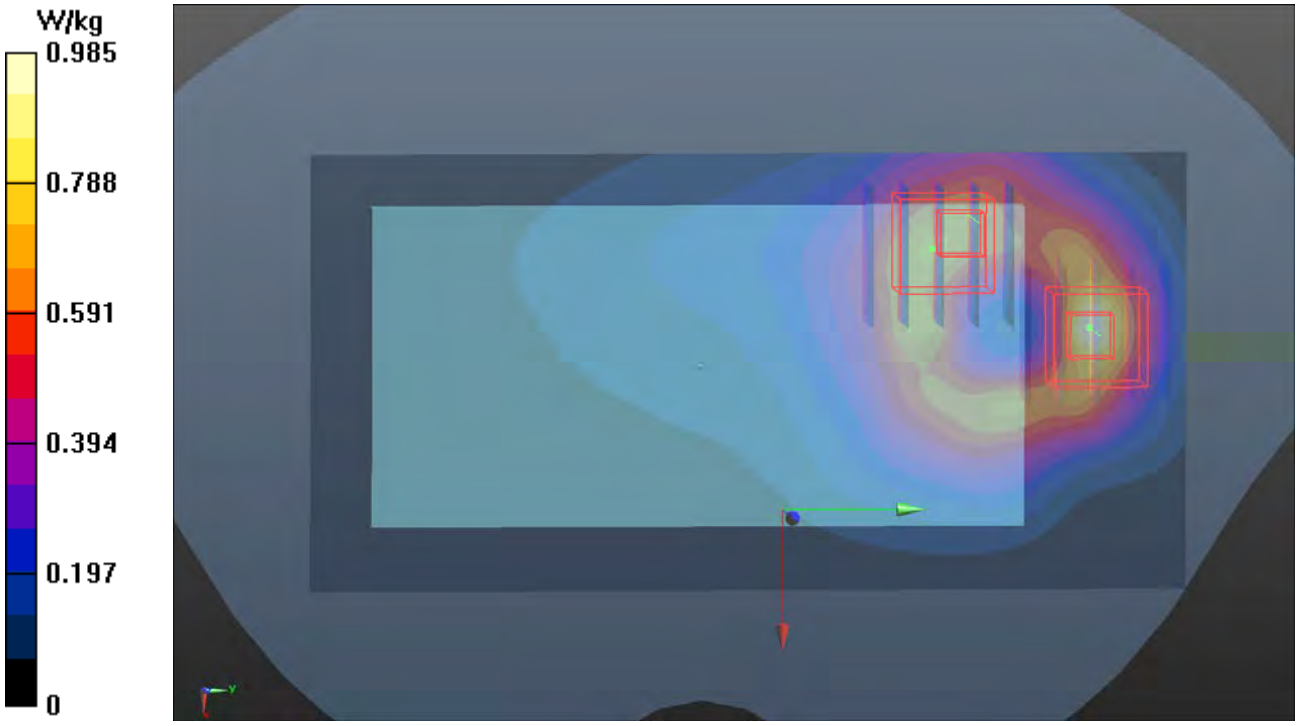

P33 LTE 2_QPSK20M_Bottom Side_1cm_Ch19100_Ant0_1RB_OS0

DUT: 170426C41

Communication System: LTE; Frequency: 1900 MHz;Duty Cycle: 1:1
Medium: B16T20N2_0821 Medium parameters used: f = 1900 MHz; σ = 1.582 S/m; ε_r = 50.698; ρ = 1000 kg/m^3
Ambient Temperature：23.8 ℃ ; Liquid Temperature：23.1 ℃

DASY5 Configuration:
- Probe: EX3DV4 - SN7351; ConvF(8.14, 8.14, 8.14); Calibrated: 2016/12/20;
- Sensor-Surface: 1.4mm (Mechanical Surface Detection)
- Electronics: DAE4 Sn861; Calibrated: 2017/05/22
- Phantom: Twin SAM Phantom_1496; Type: QD000P40CA;
- Measurement SW: DASY52, Version 52.8 (8); SEMCAD X Version 14.6.10 (7373)

- Area Scan (61x71x1): Interpolated grid: dx=1.500 mm, dy=1.500 mm
Maximum value of SAR (interpolated) = 1.68 W/kg

- Zoom Scan (5x5x7)/Cube 0: Measurement grid: dx=8mm, dy=8mm, dz=5mm
Reference Value = 33.23 V/m; Power Drift = -0.06 dB
Peak SAR (extrapolated) = 1.92 W/kg
SAR(1 g) = 1.04 W/kg; SAR(10 g) = 0.532 W/kg
Maximum value of SAR (measured) = 1.62 W/kg

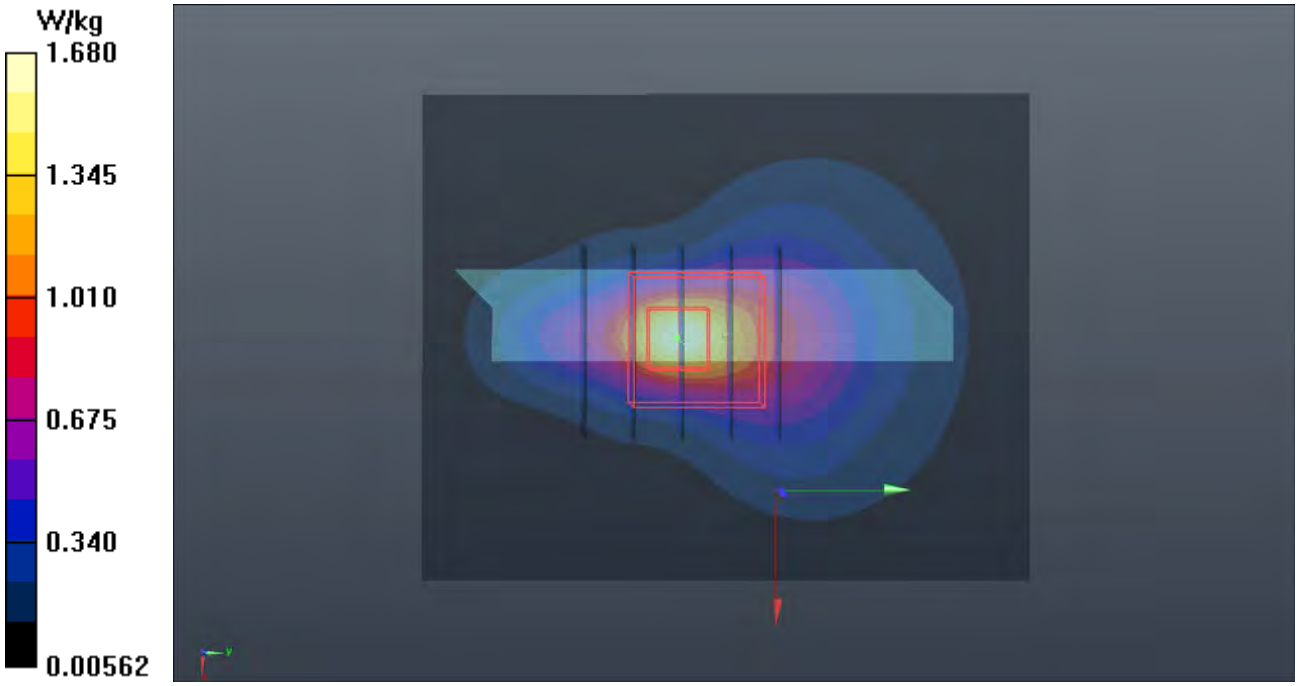

P34 LTE 5_QPSK10M_Front Face_1cm_Ch20600_Ant1_1RB_OS0

DUT: 170706C19

Communication System: LTE; Frequency: 844 MHz;Duty Cycle: 1:1
Medium: B07T10N2_0907 Medium parameters used: f = 844 MHz; σ = 0.976 S/m; ε_r = 54.927; ρ = 1000 kg/m^3
Ambient Temperature：23.8 ℃ ; Liquid Temperature：23.4 ℃

DASY5 Configuration:
- Probe: EX3DV4 - SN7375; ConvF(9.94, 9.94, 9.94); Calibrated: 2016/12/08;
- Sensor-Surface: 1.4mm (Mechanical Surface Detection)
- Electronics: DAE4 Sn1431; Calibrated: 2017/03/20
- Phantom: Twin SAM Phantom_1485; Type: QD000P40;
- Measurement SW: DASY52, Version 52.8 (8); SEMCAD X Version 14.6.10 (7373)

- Area Scan (71x141x1): Interpolated grid: dx=1.500 mm, dy=1.500 mm
Maximum value of SAR (interpolated) = 0.906 W/kg

- Zoom Scan (5x5x7)/Cube 0: Measurement grid: dx=8mm, dy=8mm, dz=5mm
Reference Value = 30.55 V/m; Power Drift = -0.01 dB
Peak SAR (extrapolated) = 1.27 W/kg
SAR(1 g) = 0.710 W/kg; SAR(10 g) = 0.407 W/kg
Maximum value of SAR (measured) = 0.960 W/kg

- Zoom Scan (5x5x7)/Cube 1: Measurement grid: dx=8mm, dy=8mm, dz=5mm
Reference Value = 30.55 V/m; Power Drift = -0.01 dB
Peak SAR (extrapolated) = 0.974 W/kg
SAR(1 g) = 0.630 W/kg; SAR(10 g) = 0.415 W/kg
Maximum value of SAR (measured) = 0.840 W/kg

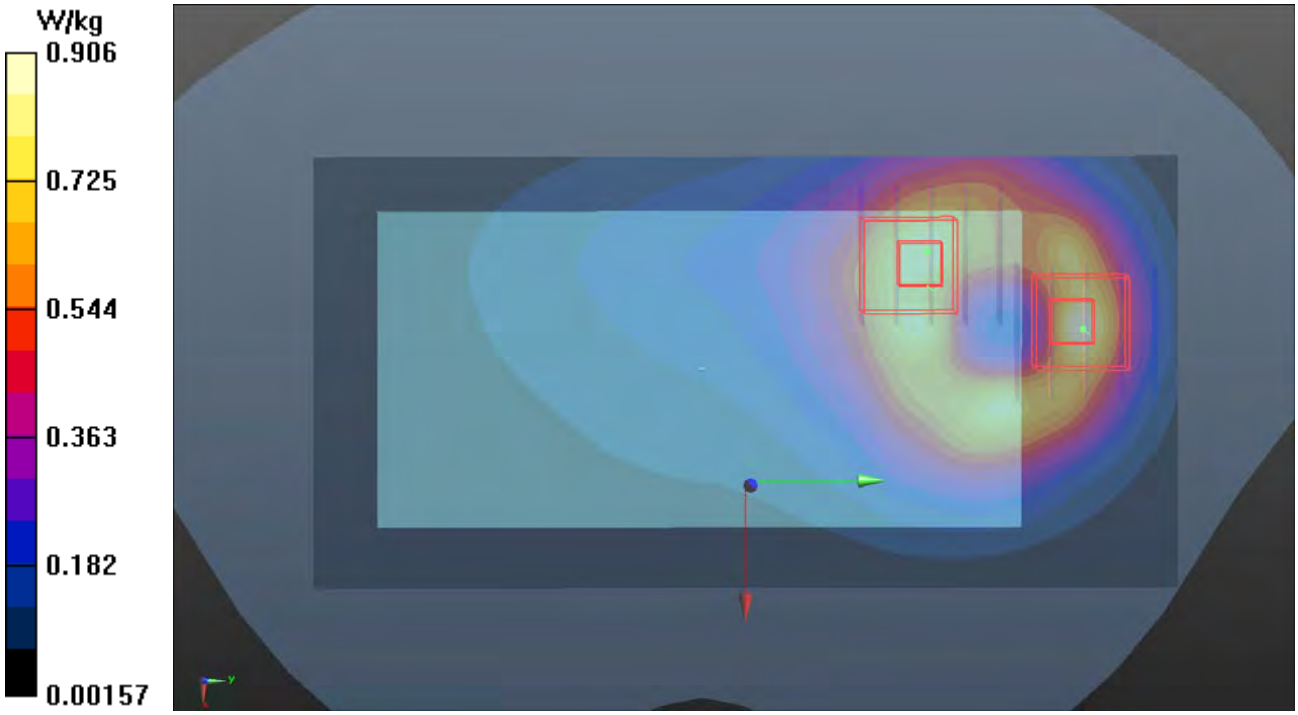

P35 LTE 7_QPSK20M_Bottom Side_1cm_Ch21100_Ant0_1RB_OS50

DUT: 170426C41

Communication System: LTE; Frequency: 2535 MHz;Duty Cycle: 1:1
Medium: B19T27N5_0802 Medium parameters used: f = 2535 MHz; σ = 2.094 S/m; ε_r = 51.152; ρ = 1000 kg/m^3
Ambient Temperature：23.8 ℃ ; Liquid Temperature：23.4 ℃

DASY5 Configuration:
- Probe: EX3DV4 - SN3971; ConvF(7.32, 7.32, 7.32); Calibrated: 2017/03/24;
- Sensor-Surface: 1.4mm (Mechanical Surface Detection)
- Electronics: DAE3 Sn579; Calibrated: 2016/09/05
- Phantom: Twin SAM Phantom_1823; Type: QD000P40CD;
- Measurement SW: DASY52, Version 52.8 (8); SEMCAD X Version 14.6.10 (7373)

- Area Scan (81x101x1): Interpolated grid: dx=1.200 mm, dy=1.200 mm
Maximum value of SAR (interpolated) = 1.67 W/kg

- Zoom Scan (5x5x7)/Cube 0: Measurement grid: dx=8mm, dy=8mm, dz=5mm
Reference Value = 25.71 V/m; Power Drift = 0.13 dB
Peak SAR (extrapolated) = 2.32 W/kg
SAR(1 g) = 1.13 W/kg; SAR(10 g) = 0.558 W/kg
Maximum value of SAR (measured) = 1.84 W/kg

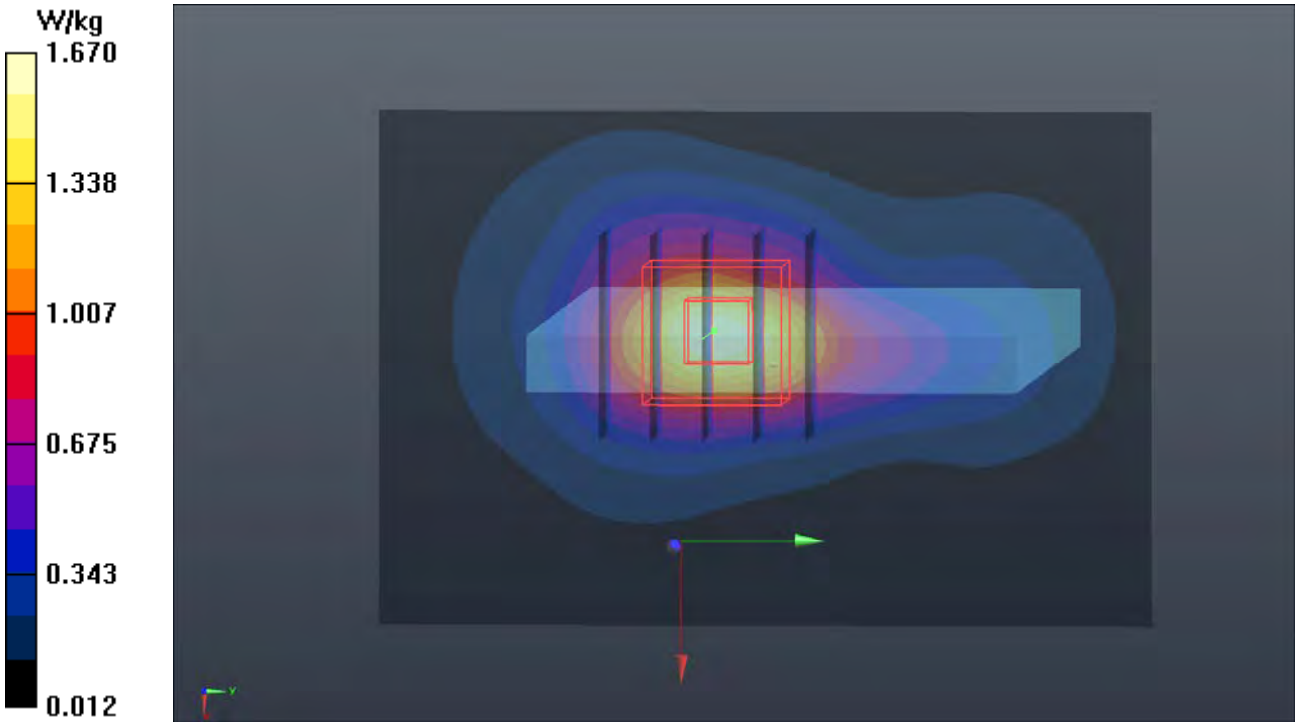

P36 LTE 26_QPSK15M_Front Face_1cm_Ch26865_Ant1_1RB_OS0

DUT: 170706C19

Communication System: LTE; Frequency: 831.5 MHz;Duty Cycle: 1:1
Medium: B07T10N1_0908 Medium parameters used: f = 831.5 MHz; σ = 0.98 S/m; ε_r = 55.38; ρ = 1000 kg/m^3
Ambient Temperature：23.6 ℃ ; Liquid Temperature：23.2 ℃

DASY5 Configuration:
- Probe: ET3DV6 - SN1790; ConvF(6.66, 6.66, 6.66); Calibrated: 2017/05/24;
- Sensor-Surface: 4mm (Mechanical Surface Detection)
- Electronics: DAE4 Sn917; Calibrated: 2017/01/06
- Phantom: Twin SAM Phantom_1485; Type: QD000P40;
- Measurement SW: DASY52, Version 52.8 (8); SEMCAD X Version 14.6.10 (7373)

- Area Scan (71x141x1): Interpolated grid: dx=1.500 mm, dy=1.500 mm
Maximum value of SAR (interpolated) = 0.816 W/kg

- Zoom Scan (5x5x7)/Cube 0: Measurement grid: dx=8mm, dy=8mm, dz=5mm
Reference Value = 29.64 V/m; Power Drift = -0.08 dB
Peak SAR (extrapolated) = 1.35 W/kg
SAR(1 g) = 0.761 W/kg; SAR(10 g) = 0.440 W/kg
Maximum value of SAR (measured) = 0.860 W/kg

- Zoom Scan (5x5x7)/Cube 1: Measurement grid: dx=8mm, dy=8mm, dz=5mm
Reference Value = 29.64 V/m; Power Drift = -0.08 dB
Peak SAR (extrapolated) = 0.970 W/kg
SAR(1 g) = 0.622 W/kg; SAR(10 g) = 0.396 W/kg
Maximum value of SAR (measured) = 0.689 W/kg

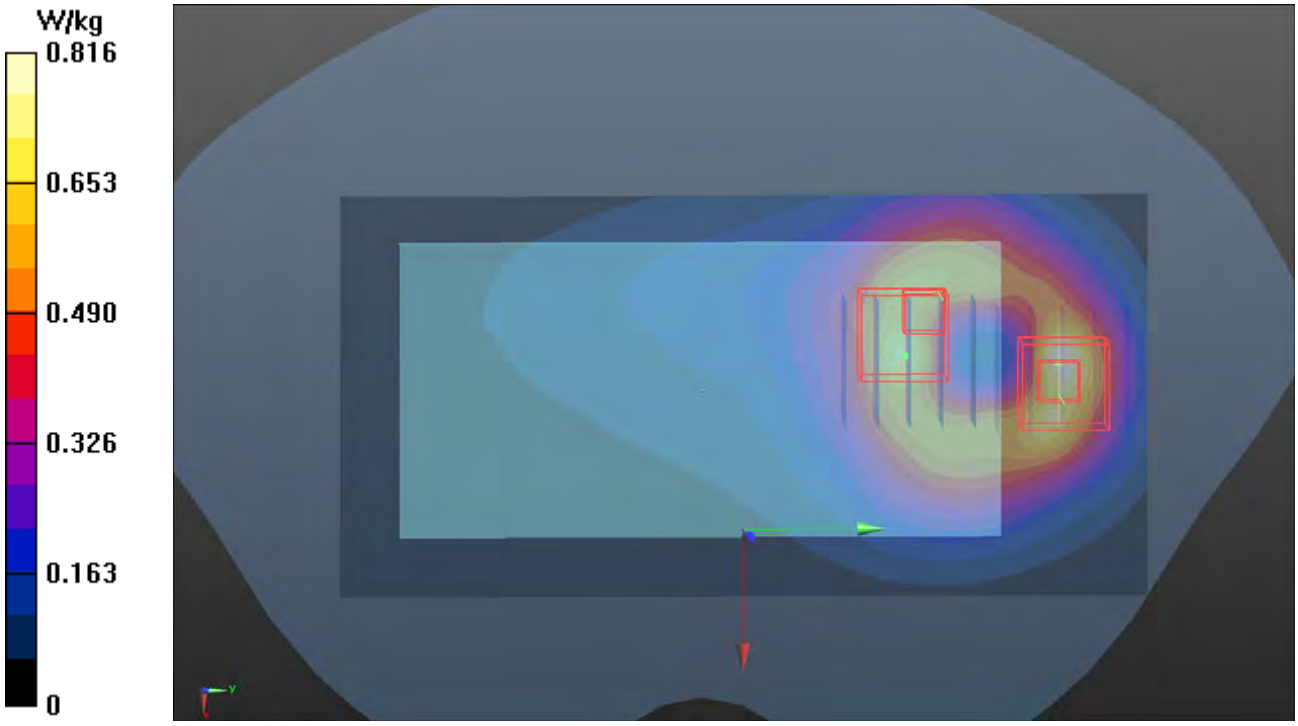

P37 LTE 41_QPSK20M_Bottom Side_1cm_Ch40240_Ant0_1RB_OS50

DUT: 170726C31

Communication System: LTE; Frequency: 2555 MHz;Duty Cycle: 1:1.58
Medium: B19T27N5_0823 Medium parameters used: f = 2555 MHz; σ = 2.121 S/m; ε_r = 50.983; ρ = 1000 kg/m^3
Ambient Temperature：23.5 ℃ ; Liquid Temperature：23.3 ℃

DASY5 Configuration:
- Probe: EX3DV4 - SN3650; ConvF(7.14, 7.14, 7.14); Calibrated: 2016/07/25;
- Sensor-Surface: 1.4mm (Mechanical Surface Detection)
- Electronics: DAE4 Sn1277; Calibrated: 2016/07/22
- Phantom: Twin SAM Phantom_1485; Type: QD000P40;
- Measurement SW: DASY52, Version 52.8 (8); SEMCAD X Version 14.6.10 (7373)

- Area Scan (71x101x1): Interpolated grid: dx=1.200 mm, dy=1.200 mm
Maximum value of SAR (interpolated) = 1.12 W/kg

- Zoom Scan (5x5x7)/Cube 0: Measurement grid: dx=8mm, dy=8mm, dz=5mm
Reference Value = 23.18 V/m; Power Drift = -0.10 dB
Peak SAR (extrapolated) = 1.44 W/kg
SAR(1 g) = 0.728 W/kg; SAR(10 g) = 0.360 W/kg
Maximum value of SAR (measured) = 1.17 W/kg

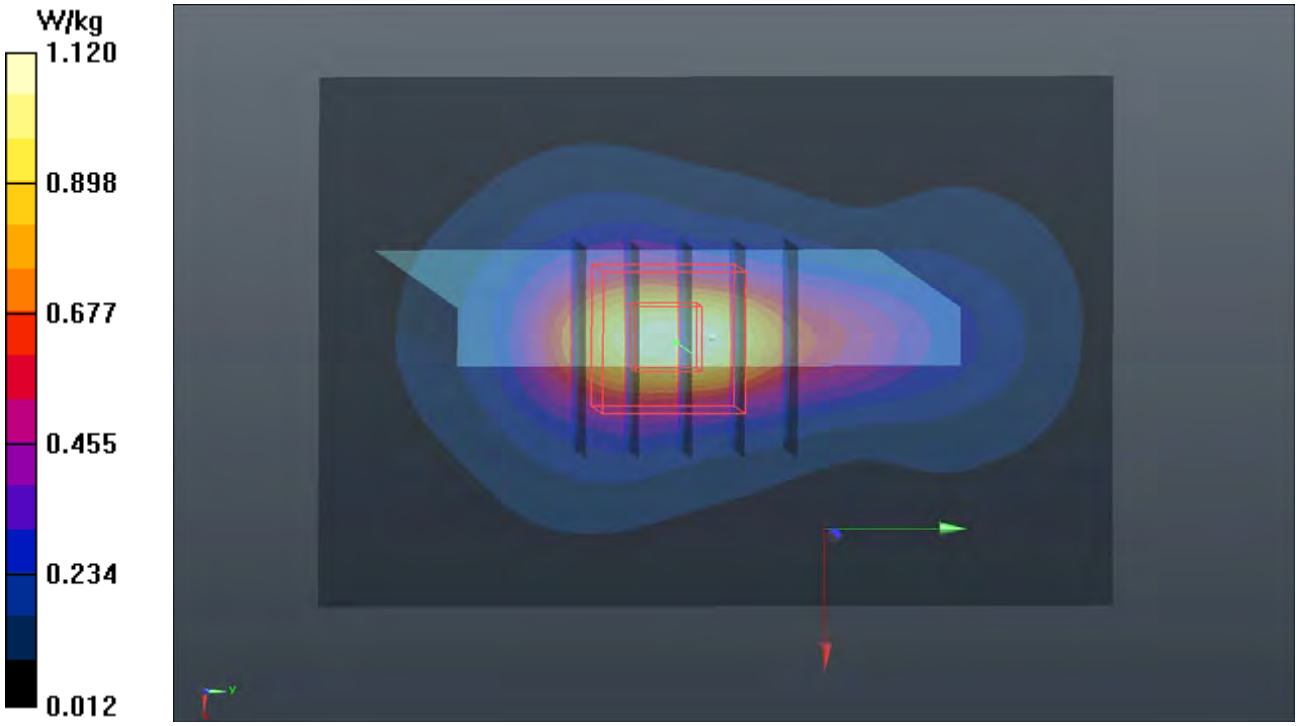

P38 2.4G WLAN_802.11b_Rear Face_1cm_Ch1

DUT: 170425C26

Communication System: WLAN_2.4G; Frequency: 2412 MHz;Duty Cycle: 1:1
Medium: B19T27N4_0714 Medium parameters used: f = 2412 MHz; σ = 1.954 S/m; ε_r = 51.658; ρ = 1000 kg/m^3
Ambient Temperature：23.8 ℃ ; Liquid Temperature：23.2 ℃

DASY5 Configuration:
- Probe: EX3DV4 - SN3753; ConvF(7.27, 7.27, 7.27); Calibrated: 2017/05/05;
- Sensor-Surface: 1.4mm (Mechanical Surface Detection)
- Electronics: DAE4 Sn916; Calibrated: 2016/12/15
- Phantom: Twin SAM Phantom_1127; Type: QD000P40CA;
- Measurement SW: DASY52, Version 52.8 (8); SEMCAD X Version 14.6.10 (7373)

- Area Scan (91x151x1): Interpolated grid: dx=1.200 mm, dy=1.200 mm
Maximum value of SAR (interpolated) = 0.506 W/kg

- Zoom Scan (5x5x7)/Cube 0: Measurement grid: dx=8mm, dy=8mm, dz=5mm
Reference Value = 14.02 V/m; Power Drift = 0.01 dB
Peak SAR (extrapolated) = 0.637 W/kg
SAR(1 g) = 0.359 W/kg; SAR(10 g) = 0.189 W/kg
Maximum value of SAR (measured) = 0.538 W/kg

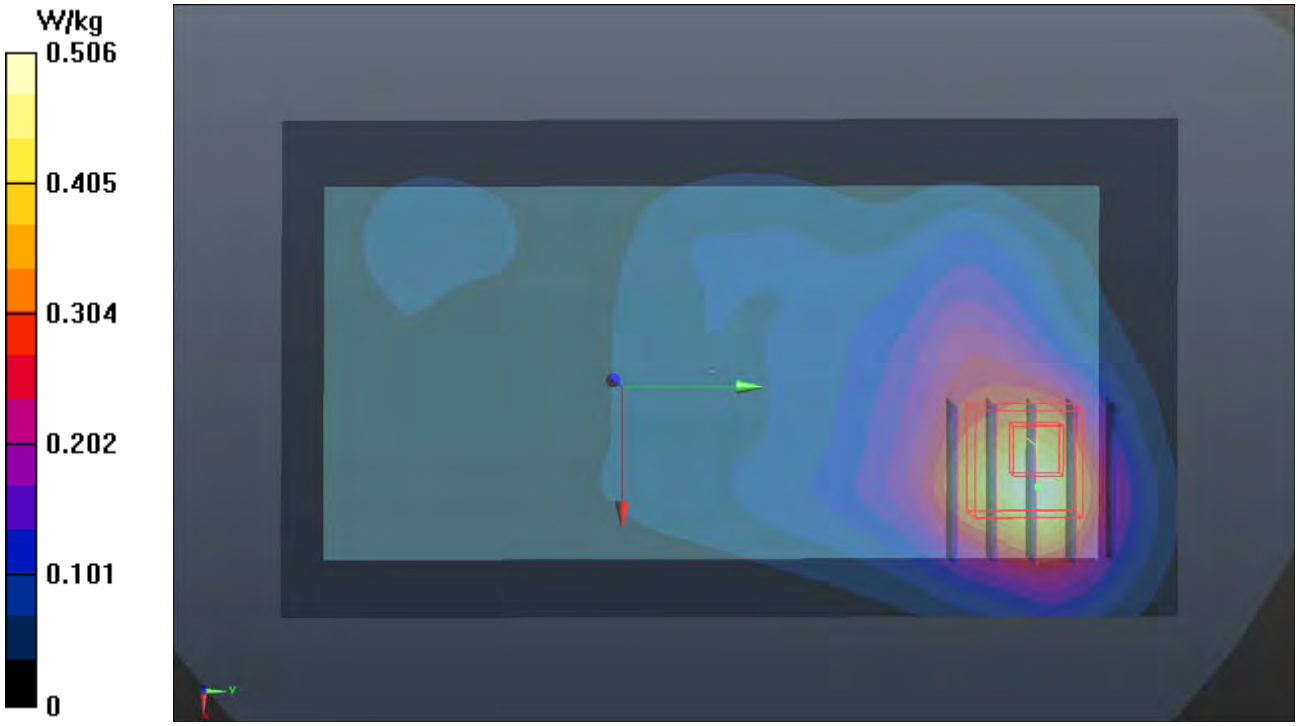

P39 5.2G WLAN_802.11n HT40_Front Face_1cm_Ch46

DUT: 170425C26

Communication System: WLAN_5G; Frequency: 5230 MHz;Duty Cycle: 1:1
Medium: B34T60N1_0714 Medium parameters used: f = 5230 MHz; σ = 5.373 S/m; ε_r = 47.331; ρ = 1000 kg/m^3
Ambient Temperature：23.9 ℃ ; Liquid Temperature：23.3 ℃

DASY5 Configuration:
- Probe: EX3DV4 - SN3971; ConvF(4.7, 4.7, 4.7); Calibrated: 2017/03/24;
- Sensor-Surface: 1.4mm (Mechanical Surface Detection)
- Electronics: DAE3 Sn579; Calibrated: 2016/09/05
- Phantom: Twin SAM Phantom_1485; Type: QD000P40;
- Measurement SW: DASY52, Version 52.8 (8); SEMCAD X Version 14.6.10 (7373)

- Area Scan (101x181x1): Interpolated grid: dx=1.000 mm, dy=1.000 mm
Maximum value of SAR (interpolated) = 0.778 W/kg

- Zoom Scan (6x6x12)/Cube 0: Measurement grid: dx=5mm, dy=5mm, dz=2mm
Reference Value = 13.32 V/m; Power Drift = -0.02 dB
Peak SAR (extrapolated) = 1.24 W/kg
SAR(1 g) = 0.314 W/kg; SAR(10 g) = 0.104 W/kg
Maximum value of SAR (measured) = 0.728 W/kg

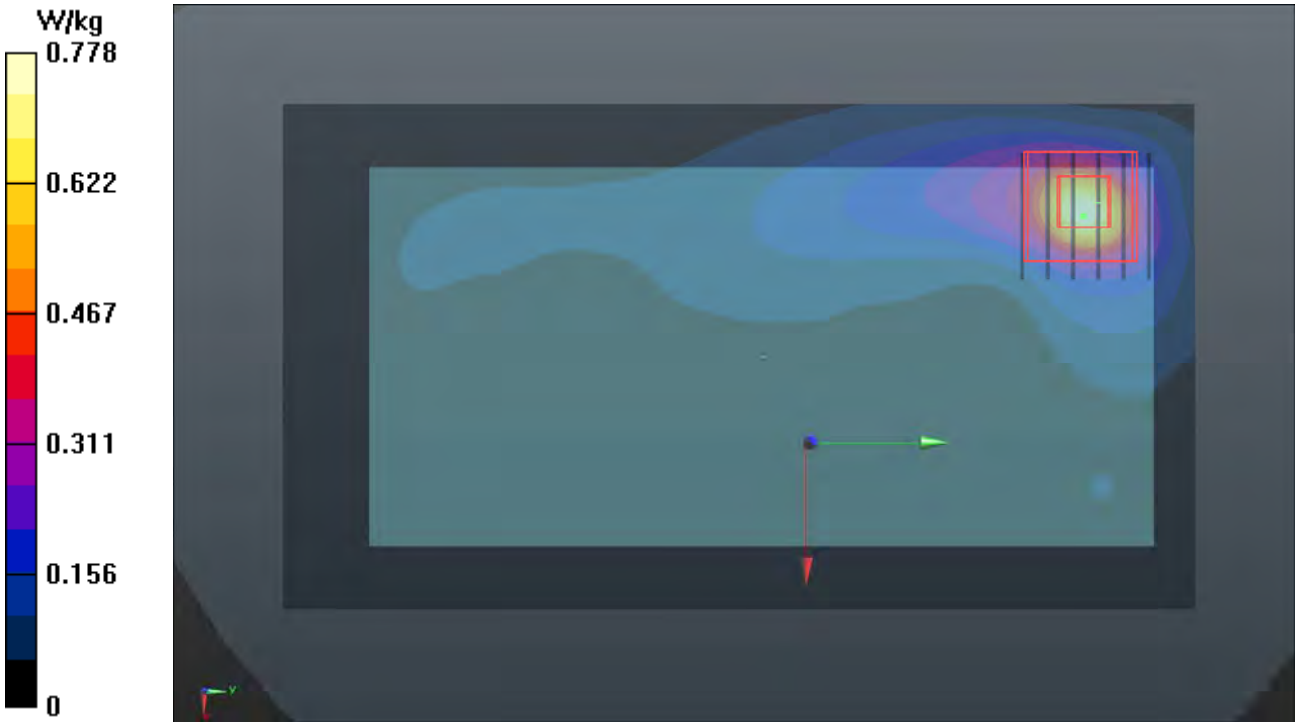

P40 5.8G WLAN_802.11n HT40_Front Face_1cm_Ch159

DUT: 170425C26

Communication System: WLAN_5G; Frequency: 5795 MHz;Duty Cycle: 1:1
Medium: B34T60N1_0714 Medium parameters used: f = 5795 MHz; σ = 6.106 S/m; ε_r = 46.403; ρ = 1000 kg/m^3
Ambient Temperature：23.9 ℃ ; Liquid Temperature：23.3 ℃

DASY5 Configuration:
- Probe: EX3DV4 - SN3971; ConvF(4.22, 4.22, 4.22); Calibrated: 2017/03/24;
- Sensor-Surface: 1.4mm (Mechanical Surface Detection)
- Electronics: DAE3 Sn579; Calibrated: 2016/09/05
- Phantom: Twin SAM Phantom_1485; Type: QD000P40;
- Measurement SW: DASY52, Version 52.8 (8); SEMCAD X Version 14.6.10 (7373)

- Area Scan (101x181x1): Interpolated grid: dx=1.000 mm, dy=1.000 mm
Maximum value of SAR (interpolated) = 0.775 W/kg
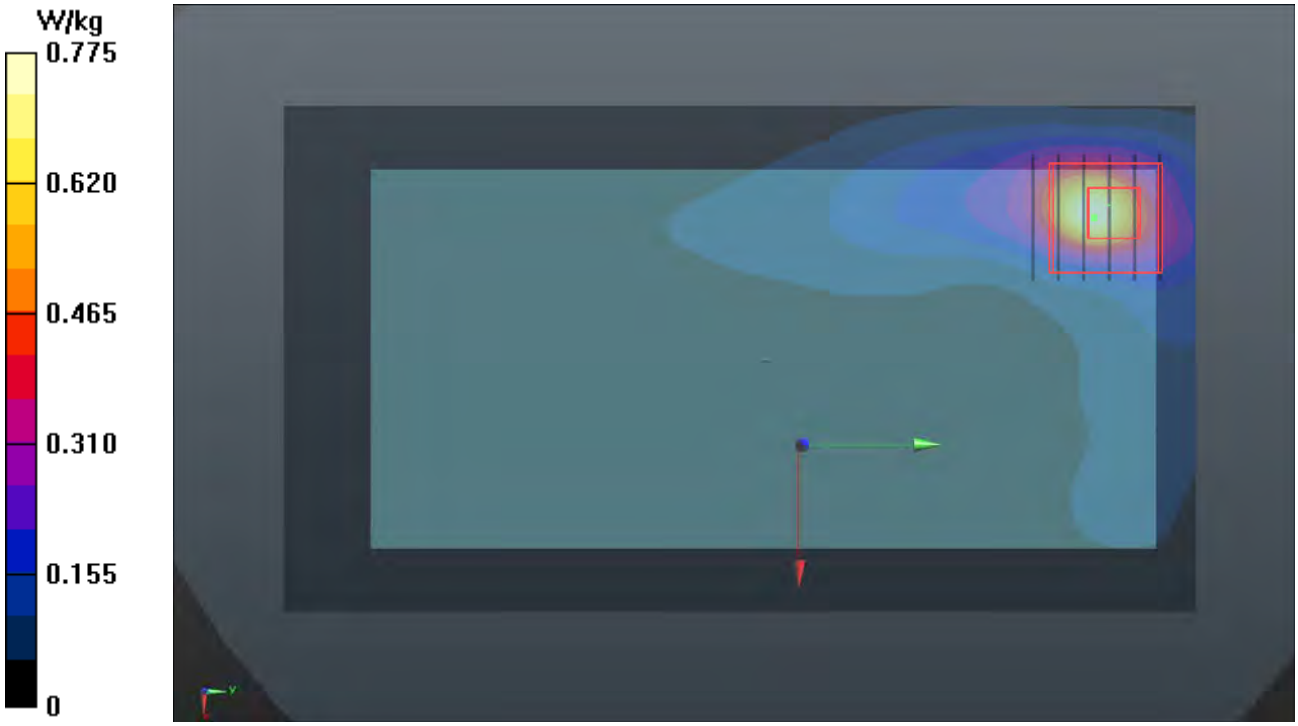
- Zoom Scan (6x6x12)/Cube 0: Measurement grid: dx=5mm, dy=5mm, dz=2mm
Reference Value = 12.86 V/m; Power Drift = -0.07 dB
Peak SAR (extrapolated) = 1.51 W/kg
SAR(1 g) = 0.343 W/kg; SAR(10 g) = 0.110 W/kg
Maximum value of SAR (measured) = 0.834 W/kg