WaveNet

5000 MOBILE TERMINAL PRODUCT GUIDE

Version 2.22

WaveNet International Inc.
5825 Kennedy Road
Mississauga, Ontario
Canada L4Z 2G3

Telephone : 1 905 712 4700
Facsimile : 1 905 712-4703
Email : wavenet@wavenet-rf.com

© 1997 WaveNet International Inc. All rights reserved.

WaveNet International Inc. reserves the right to amend the contents of this guide at any time to reflect product development and product improvements.

Regulations and Approvals

The 5000 Mobile Terminal (MT) equipment has been designed to comply with international standards for product safety, electromagnetic compatibility, and radio transceiver operation. These standards can vary by the country of use, frequency of operation, and modulation technique. At the time of writing, the 5000 MT has been certified to the applicable standards for the US, Canadian and UK markets.

In the United States, the 5000 MT complies with UL/CSA requirements for safety, and the radio transceivers are type approved to the following standards:

FCC Parts 2 and 90 (for 450 to 470 MHz narrow band operation),
FCC Part 15 (for 902 to 928 MHz direct sequence spread spectrum operation).

This equipment has been tested and found to comply with the limits for Class A digital devices, pursuant to Part 15 of the FCC rules. These limits are designed to provide reasonable protection against harmful interference when the equipment is operated in a commercial environment. The equipment generates, uses, and can radiate radio frequency energy and, if not installed and used in accordance with the instruction manual, may cause harmful interference to radio communications.

Operation of this equipment in a residential area will cause harmful interference, in which case the user will be required to correct the interference at the user's own expense. All external cables must be shielded to ensure compliance with the Class A FCC limits.

In situations where the user elects to install WaveNet specified equipment including high gain antenna kits, the user will be responsible for adhering to all pertinent FCC, fire and safety/building code regulations pertaining to the installation.

***WARNING*: Changes or modifications to the equipment, not expressly approved by WaveNet International Inc. could void the user's authority to operate the equipment and void the warranty.**

In the UK, the 5000 MT carries the CE mark. Radio transceivers of the 5000 MT are type approved to the following ETS standards:

ETS 300 220 (for 450 to 466 MHz operation),
ETS 300 086/113 (for 450 to 466 MHz operation).

For more information on 5000 MT regulatory approvals, contact your local WaveNet representative.

RF EXPOSURE WARNING

In order to ensure user safety and to satisfy RF exposure requirements for mobile transmitting devices, a minimum separation distance of 25 cm. (10 inches) must be maintained between the transmitting device and the user (or other nearby persons) during device operation. Operation at smaller separation distances is not recommended.

Table of Contents

List of Figures
List of Tables
Preface

CHAPTER 1 : INTRODUCTION 1-1

WHAT IS A 5000 MOBILE TERMINAL? 1-1
INPUT/OUTPUT PORTS 1-2
TOUCH SCREEN TYPES 1-3
ENCLOSURE 1-4
WHAT IS THE WAVENET WIRELESS LAN? 1-5
7000 BASE CONTROLLER 1-5
RADIO DATA REMOTE DEVICES 1-6

CHAPTER 2 : SETTING UP 2-7

PRELIMINARY CHECKS 2-7
POWERING UP/DOWN 2-7
RESTARTING 2-8

CHAPTER 3 : USING TOUCH SCREEN FEATURES 3-9

TOUCH SCREEN INTERFACE 3-9
ABOUT TOUCH SCREEN AREAS 3-9
DISPLAY WINDOWS 3-12
WINDOW CONTROLS 3-14
MENU NAVIGATION 3-16
POP-UP KEYBOARDS 3-17
HOT KEYS 3-17
ASSIGNING 3-18
REMOVING 3-19
RADIO GAUGES 3-19

CHAPTER 4 : USING THE PRESENTATION MANAGER 4-21

PRESENTATION WINDOW MENUS 4-21
WINDOWS 4-23
LISTING 4-23
ARRANGING 4-23
SWITCHING 4-23
SAMPLE GRAPHICS 4-23
SECURITY OPTIONS 4-24

PASSWORDS 4-24
CONFIGURATION LEVELS 4-25
TOUCH SCREEN CALIBRATION 4-26
CHECKING FOR CALIBRATION 4-26
USING THE TOUCH SCREEN TO RE-CALIBRATE 4-27
USING A KEYBOARD TO RE-CALIBRATE 4-28
REMOVING THE CO-ORDINATE WINDOW 4-28
BARCODE TOGGLING 4-28
SAVING THE SETTING 4-29

CHAPTER 5 : USING THE RADIO MANAGER 5-31

RADIO SESSION MENU BAR 5-31
NARROW BAND RADIO SYSTEMS 5-31
900 MHZ RADIO SYSTEMS 5-33
2.4 GHZ (AIRONET) RADIO SYSTEMS 5-34
RADIO\SETUP MENU ITEMS 5-34
RADIO OPERATIONAL PARAMETERS (PARAMETERS MENU ITEMS) 5-34
NARROW BAND FREQUENCIES (FREQUENCIES ITEMS) 5-36
PARAMETER CLONING (CLONEPARAM'S ITEMS) 5-36
RADIO\TEST MENU ITEMS 5-36
RADIO\MONITORING MENU ITEMS 5-37
RADIO/ASSIGNKEY MENU ITEMS 5-37
RF SITE SURVEY KEYS 5-37
NARROW BAND AND 900 MHZ RADIO SITE SURVEYS 5-37
2.4 GHZ (AIRONET) RADIO SITE SURVEYS 5-38
RADIO STATISTICS SUMMARY 5-39
NARROW BAND & 900 MHZ RADIO SYSTEMS 5-39
AIRONET 2.4 GHZ RADIO SYSTEM 5-40

CHAPTER 6 : USING THE SESSION MANAGER 6-43

SESSION WINDOW MENUS 6-43
EMULATION SETTING 6-45
COMMUNICATION SETTINGS 6-45
HOST SERVICE 6-45
HOST ID 6-46
DATA BITS 6-46
DISPLAY SETTINGS 6-46
PAGE CACHING 6-46
CHARACTER SET 6-46
FONT 6-47
FONT MAP 6-47
SCREEN SIZE 6-47
ORIGIN SCROLL TOGGLE 6-48
POP-UP KEYBOARD SETTINGS 6-48
BARCODE TAB TOGGLE 6-49
CURSOR CAPTIVE TOGGLE 6-49
SERIAL I/O TOGGLE 6-49
SESSION CLONING 6-49

Cloning a Session Window 6-50
Deleting a Cloned Session Window 6-50
About the Current Session 6-50
on-line demonstration session ("Demo" service) 6-51
Configuration 6-51
Navigating the Demo Session 6-52
Local Console Session 6-54
2.4 GHz Local Telnet Sessions 6-54
Setting the Terminal IP Number 6-55
Using DNS Services 6-55
TELNET Auto-Connections 6-56
TELNET Auto-Login Services 6-58
Terminal TELNET Server 6-59

CHAPTER 7 : ADVANCED TOPICS 7-61

Host Color/Touch Options 7-61
Designing a custom keyboard 7-61
Keyboard Customization 7-62
Changing the Keyboard/Key Size and Shape 7-62
Assigning Key Features 7-64
Key Fonts 7-64
Entering Key Text 7-65
Entering Key Data 7-65
Saving Custom Keyboards 7-65
Deleting a Custom Keyboard 7-66
Assigning Hot Keys to Keyboards 7-66
Reviewing Keyboards 7-66
Using a PC Keyboard 7-66
Using the Touch Console Window 7-67
Connecting a Console Device 7-68
Downloading Images to Flash Memory 7-69

CHAPTER 8 : INSTALLATION REFERENCE 8-71

5000 external dimensions 8-71
universal truck mounting bracket dimensions 8-73
MODEL 5000 MOBILE TERMINAL JUMPER CONFIGURATIONS 8-75
SRAM (J2) 8-75
Watch Dog Timer (J3) 8-75
Remote Heater Panel (J4/J11) 8-75
SRAM Test (J21) 8-75
EEPROM (J23) 8-75
SCANNER CONNECTOR 8-76
SCANNER CONNECTOR SIGNALS 8-76
SYMBOL decoding SCANNER INTERFACE (typical) 8-76
CONSOLE/serial I/O CONNECTOR 8-77
TYPICAL EXTERNAL CONSOLE & DEVICE CABLE CONNECTIONS 8-77
Power connector and extension cable 8-78

SPEAKER/MIC PORT 8-79

CHAPTER 9 : PRODUCT SPECIFICATIONS 9-81

PHYSICAL & ENVIRONMENTAL 9-81
ARCHITECTURE 9-81
RADIO TECHNOLOGIES 9-81
DISPLAY/KEYBOARD 9-81
EXTERNAL DEVICE INTERFACES 9-82

CHAPTER 10 : REVISION HISTORY 9-83

INDEX 84

List of Figures

FIGURE 1-1 FRONT VIEW OF THE 5000 MOBILE TERMINAL 1-2
FIGURE 1-2 BOTTOM VIEW OF THE 5000 MOBILE TERMINAL 1-2
FIGURE 1-3 A MOUNTED 5000 MOBILE TERMINAL 1-5
FIGURE 3-1 TOUCH SCREEN AREAS 3-10
FIGURE 3-2 THE DISPLAY AREA 3-11
FIGURE 3-3 THE TOUCH KEYPAD OVERLAY 3-12
FIGURE 3-4 EXAMPLE MULTIPLE WINDOWS 3-13
FIGURE 3-5 THE WINDOW CONTROLS 3-15
FIGURE 3-6 RADIO GAUGES 3-19
FIGURE 4-1 OFFSET CURSOR 4-27
FIGURE 4-2 TOUCHING THE UR CORNER 4-28
FIGURE 7-1 THE CONSOLE SETUP 7-68

List of Tables

TABLE 4-1 PRESENTATION WINDOW MENU MAP 4-22
TABLE 6-1 THE SESSION MANAGER WINDOW MENU STRUCTURE 6-45
TABLE 6-2 FONT AND SCREEN SIZES 6-48
TABLE 7-1 KEYBOARD/KEY SIZE AND SHAPE KEY LIST 7-63
TABLE 7-2 KEY FEATURE LIST 7-64

Preface

This user guide is intended for use by technical support personnel who require information to operate, configure or maintain a *WaveNet* Model 5000 Mobile Terminal unit. This unit is a data terminal component of the WaveNet Radio Data Network (WRDN) technology. This unit supports wireless data communications. The wireless medium used by the WRDN is the radio frequency signal.

This guide assumes that the 5000 Mobile Terminal is, at least, a minimally configured unit as supplied by *WaveNet*.

How to Use this Guide

This guide is organized into seven chapters, a glossary and an index. The following chapter descriptions indicate the scope of this guide:

Chapter 1 Introduces the 5000 Mobile Terminal, its major hardware features, and its operational network environment.

Chapter 2 Discusses how to set up the 5000 Mobile Terminal to prepare for configuration, monitoring, and advanced operations.

Chapter 3 Discusses how to utilize the major touch screen features of the 5000 Mobile Terminal.

Chapter 4 Explains how to utilize the Presentation Manager window menu functions of the 5000 Mobile Terminal.

Chapter 5 Explains how to utilize the Radio Manager window menu functions of the 5000 Mobile Terminal.

Chapter 6 Explains how to utilize the Session Manager window menu functions of the 5000 Mobile Terminal.

Chapter 7 Explains how to utilize current advanced procedures for maintaining or upgrading the 5000 Mobile Terminal.

*In general, labeled keys and menu items are depicted in **bold** type and with similar character case. In addition, the labeled keys are shown within angle brackets. For example:*

?? the <**ENTER**> key.
?? the **KB Assign** menu item.

Comments to be *noted* are highlighted with: ?

Chapter 1 : Introduction

This chapter introduces the **5000 Mobile Terminal**, its major hardware features, and its operational network environment.

WHAT IS A 5000 MOBILE TERMINAL?

The **WaveNet Model 5000 Mobile Terminal** is a component of the **WaveNet Radio Data Network (WRDN)** technology. This technology facilitates wireless data communications among mobile data devices within a local area network environment.

The 5000 Mobile Terminal (**MT**) unit is a sophisticated wireless data terminal that is typically mounted on a mobile vehicle.

The MT unit provides a touch screen interface for interactive multi-session communications with host computer systems and their applications. The Mobile Terminal communicates to a host via a Model 7000 Base Controller unit. (see section on 'Network Components' in this chapter).

The MT unit is assembled with one of four available types of touch-sensitive display screens - monochrome or color display for resistive or capacitive touch.

The MT unit provides connectivity to an external bar-code scanner, or to other external RS-232 devices such as a printer, process controller, etc.

The MT unit is typically powered by a separate DC power source (10 to 50 Volts) which is carried on the vehicle.

Figure 1-1 shows the front view of an MT unit with a directly connected ¼ wave whip antenna. The antenna can be mounted separately from the MT unit mount by using appropriate cabling.

Figure 1-1 Front View of the 5000 Mobile Terminal

Figure 1-2 shows the bottom view of an MT unit where various connectors, a power ON/OFF push-button switch, and a DC power cable are located.

Figure 1-2 Bottom View of the 5000 Mobile Terminal

Input/Output Ports

The MT unit provides one RF port at the antenna connector (see Figure 1-1). The unit also provides one Console port (for servicing the unit), a bar-code scanner port, a keyboard port, and a voice port at the bottom of the unit (see Figure 1-2).

RF Port

This port uses an RF connector, type SMA bulkhead jack, to connect a radio antenna that matches the installed radio technology transceiver. A wave whip antenna can be directly attached at the connector or, indirectly, via a length of RG-58/U 50 Ohm coaxial cable (usually attached to a magnetic mount for the antenna). The coaxial connectors are typically 'reverse threaded' to prevent an inappropriate antenna from being inadvertently attached.

Console Port

The console (external interface) port (20 pins) provides a servicing interface for the configuring, testing, monitoring, and reporting functions that can be applied to the MT unit. This port supports full RS-232 modem functionality for remote servicing.

? *This port is disabled when the Scanner Port is enabled.*

Scanner Port

The scanner port is RS-232 compatible, and is mainly used to attach a bar-code laser scanner. This port can also be used for other serial input/output applications. This port is enabled via the **BarCode menu item** of the Presentation Manager's **Local menu**.

Keyboard Port

The keyboard port is used to attach an external PC compatible keyboard to serve as an alternative to the touch screen pop-up keyboards.

? *The <**Alt**> key on a connected external keyboard is equivalent to the touch -screen's <**2nd**> key.*

Voice Port

The voice port is used to attach a speaker/microphone unit for voice communications with other MT units, which are similarly configured. Voice communication is via point-to-point analog radio signal.

The voice radio channel is enabled/disabled via the **Voice menu item** of the Presentation's Manager's **Global menu**.

? *Note that when the voice channel is active, the data channel is inactive.*

Touch Screen Types

The MT unit is assembled with one of four available types of touch-sensitive display screens - monochrome or color display for resistive or capacitive touch. The display screen is a liquid crystal display (LCD) with diffused Cold Cathode Florescent Tube (CCFT) back lighting. Covering the screen, is a transparent touch-sensitive layer.

The touch screen size is 12.2 inches diagonal (1024 x 1024 pixels). Within the screen area, is a 10.4 inches diagonal display area (640 x 480 pixels) which can be either VGA color (16 colors) or VGA

monochromatic (16 gray levels). Bordering the display area, is a dedicated colored keypad overlay. See Figure 1-1.

Color displays offer more distinctive details than that of monochrome displays; whereas, monochrome displays are more visible in direct sunlight than the color displays are.

Capacitive type touch-screens operate based on skin contact on a surface contact layer (contact alters the local electrical capacitance to identify a cursor location). Dirty skin or screen surface, or excessive moisture is detrimental to the touch capability.

Resistive type touch screens operate based on surface contact pressure (two separated transparent conductive layers are pressed together at the contact point to identify a cursor location). These screens can be operated via skin contact, or with gloved fingers or pointed objects. Operation of resistive screens are tolerant of some surface grime.

? *The touch screen should not be touched for at least five seconds after the display becomes visible after powering up, in order to allow the screen hardware to initialize properly.*

The touch screen should be kept clean (use a *mild* cleaning agent) and away from corrosive materials, to ensure viewing clarity and dependable operation. The touch screen assembly does have a gasket sealing the enclosure to prevent any moisture from entering and affecting any circuitry.

Enclosure

The MT unit is packaged in a dust and water-resistant enclosure with a poly-enamel finish. See Figure 1-1 for a front view of the enclosure.

The MT unit operates within a -10 to +40 degree Celsius temperature range and within a 5 to 95 % relative humidity range.

The MT unit can be mounted directly to a frame, which is in turn connected via two horizontal pivot pins to a cradle that is attached to the mobile vehicle. This assembly would provide tilt adjustment for optimizing the viewing angle of the MT display screen. The assembly must be capable of supporting the weight of the MT unit during shocks and vibrations incurred by the mobile vehicle.

The enclosure occupies a space 12.4 inches wide, 10.1 inches high, and 3.4 inches deep.

The following figure shows a MT unit attached to a pivot-type mount assembly.

Figure 1-3 A Mounted 5000 Mobile Terminal

WHAT IS THE WAVENET WIRELESS LAN?

The WaveNet Wireless LAN is a local area radio data network designed for scaleable, digital radio data communications, which allows a variety of computer systems to communicate, interactively or periodically, to a number of remote, mobile data devices.

A WaveNet Radio Data Network consists of a one or more 7000 Base Controllers, and combination of WaveNet **Radio Data Remote Devices**.

7000 Base Controller

7000 Base Controllers connect to computer systems and provide **zones** of radio data coverage in which Radio Data Remote Devices can utilize for radio data communications.

7000 Base Controllers can establish a network of overlapping or discrete radio data coverage zones if they are interconnected by any combination of Ethernet LAN, serial SLIP, or wireless radio data links. In such a network, any host computer system connected to any 7000 Base Controller is available to any Radio Data Remote Device in any radio data coverage area as a 7000 Base Controller “service”.

Radio Data Remote Devices

Radio Data Remote Devices, when in the **coverage zones** of one or more 7000 Base Controllers, utilize the radio data communications pathway to the various host computer systems connected to the 7000 Base Controllers. In such a manner, the Radio Data Remote Devices can :

?? Interact in real-time with software applications on one or more host computer systems as a "dumb" terminal of the computer system extension (using a process called "emulation"); and/or,
?? Periodically exchange text based data records with the computer system using a local program in the Radio Data Remote Device.

Radio Data Remote Devices provided by WaveNet are :

Model 5000 Mobile Terminal - utilizes a full 24x80 LCD screen and integrated touch-screen interface, housed in a full metal enclosure, for multi-windowed interactive multi-session communications. External bar code scanner and external RS-232 communications for printers, process controllers, etc., are also supported. The 5000MT is designed for use within industrial vehicles of all types, or stationary wired terminal replacement.

Model 3100 Portable AEI Terminal – an extension of the 3000 Portable Terminal, incorporating an integral AAR/ISO compatible AEI Tag reader as well as an optional integral bar code reader. The 3100 Portable AEI Terminal is also capable of operating without a radio data link, and can exchange data with computer systems via RS-232 serial communications.

Model 3000 Portable Terminal - utilizes a full keypad and large LCD display, housed in a small plastic enclosure, for interactive multi-session communications. External bar code scanner and external RS-232 communications for printers, process controller, etc., are also supported. The 3000 also has several optional selections such as internal or bar code readers, a pistol grip, various holsters, battery technologies and charging systems. The 3000 is designed for portable industrial applications of all types.

Model 1100 Network AEI Reader - provides remote, unattended reading of ISO and AAR Tags with read reporting to computer systems via the WaveNet Radio Data Network or without the WaveNet Radio Data Network via RS-232 serial links.

For more information regarding the WaveNet Radio Data Network, please refer to the publication entitled "Introduction To WaveNet Systems".

Chapter 2 : Setting Up

This chapter discusses how to set up the 5000 Mobile Terminal to prepare for configuration, monitoring, and advanced operations.

PRELIMINARY CHECKS

Before beginning any operation on the 5000 Mobile Terminal (MT) unit, the following items should be checked:

?? Ensure that the MT enclosure is appropriately mounted. For vehicle mounting, it is recommended that the MT display screen be positioned for optimal viewing angle. The MT mounting assembly should be secure enough to withstand shocks and vibrations incurred by vehicle motions. In addition, the power line cord should be secured against accidental removal from the power source.

?? Ensure that the antenna is appropriately attached to the MT unit. The antenna may be directly connected to the RF connector on the MT unit or remotely connected via a coaxial cable. Ensure that every connection is 'finger' tight.

POWERING UP/DOWN

The MT unit accepts external DC power (10 - 50 Volts) via the DC power cable mounted on the bottom of the enclosure (see Figure 1-2). DC power can be supplied from a properly fused DC source or alternatively from an AC to DC converter.

? *The MT unit should not be powered up without its antenna. Improper antenna port termination causes impedance mismatches, which can reflect damaging levels of RF power back to the transceiver.*

Powering up the MT unit is accomplished by pressing the green push-button power **ON/OFF switch**. The switch will release into the ON position and the switch indicator will turn on.

? *When powering up the MT unit, do not touch the display for at least 5 seconds after the display becomes visible. This allows the touch screen hardware to initialize properly.*

Powering down the MT unit is accomplished by pressing the green push-button power **ON/OFF switch**. The switch will latch into the OFF position and the switch indicator will turn off.

The MT unit provides RAM Backup for up to 48 hours. Thus, if the MT unit is powered down and then powered up within the 48 hours, the most recent RAM memory entries will be restored.

Restarting

The MT can be re-initialized via the touch screen by pressing the ***<2nd>*** key twice in rapid succession followed by switching power OFF and then power ON in slower succession.

Upon restart, the terminal screen will be momentarily blurred while the operating system loads, the terminal self-checks are performed, the hardware configurations are recognized, and the software start-up sequence is initiated. The terminal will then display the Presentation Manager (P.M.) window and the *WaveNet* logo. Touching any key on the overlay keypad will clear the logo and allow operation of the terminal.

? *Do not rapidly cycle the DC power **ON/OFF switch**; this could disrupt touch screen operation.*

Chapter 3 : Using Touch Screen Features

This chapter discusses how to utilize the major touch screen features of the 5000 Mobile Terminal (MT) unit.

This chapter discusses:

- ?? Touch Screen Interface
- ?? Display Windows
- ?? Pop-up Keyboards
- ?? Hot Keys
- ?? Radio Gauges

TOUCH SCREEN INTERFACE

This section discusses the following basic interface features of the touch screen:

- ?? About Touch Screen Areas
- ?? About Touch Responses

See also, the section on Touch Screen Types in Chapter 1.

About Touch Screen Areas

The touch screen consists of two distinct areas; a display area bordered on two sides by a keypad overlay.

The following figure identifies the two main touch screen areas. This example shows a blank display area with the illustrated keypad overlay.

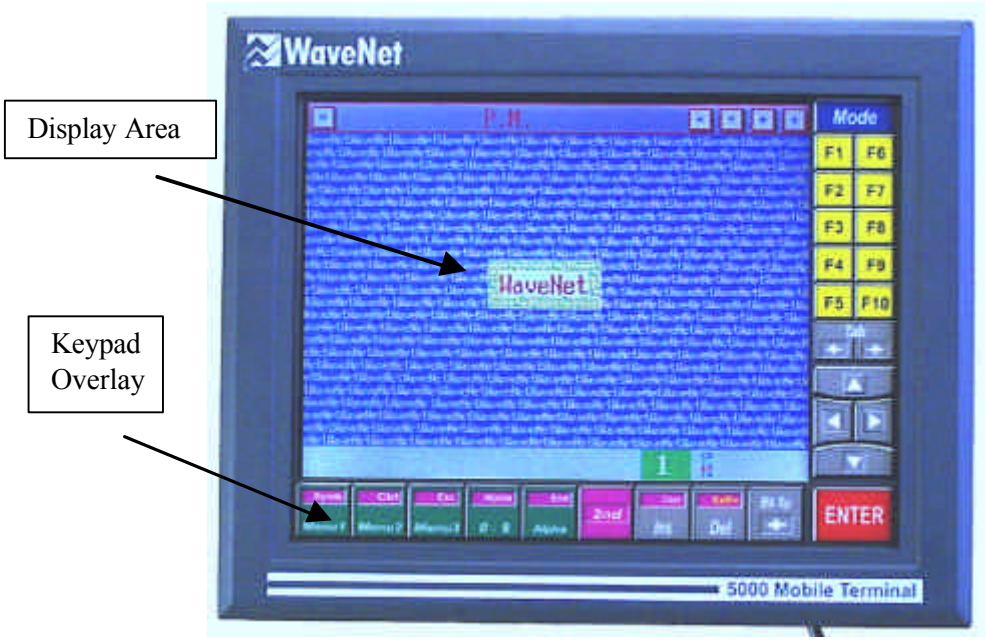

Figure 3-1 Touch Screen Areas

The Display Area

The display area supports a windows area and a status bar area.

The windows area is used to present:

- ?? Presentation Manager (P.M.) window
- ?? Radio Manager window
- ?? Session Manager windows
- ?? Various pop-up keyboards
- ?? Various pop-up dialog boxes
- ?? Console window

The status bar area is used to provide:

- ?? Selection indicators
- ?? Operator prompts
- ?? Session states
- ?? Radio gauges

The following figure identifies the main features of the display area. This figure shows a single example blank window with default status bar indications.

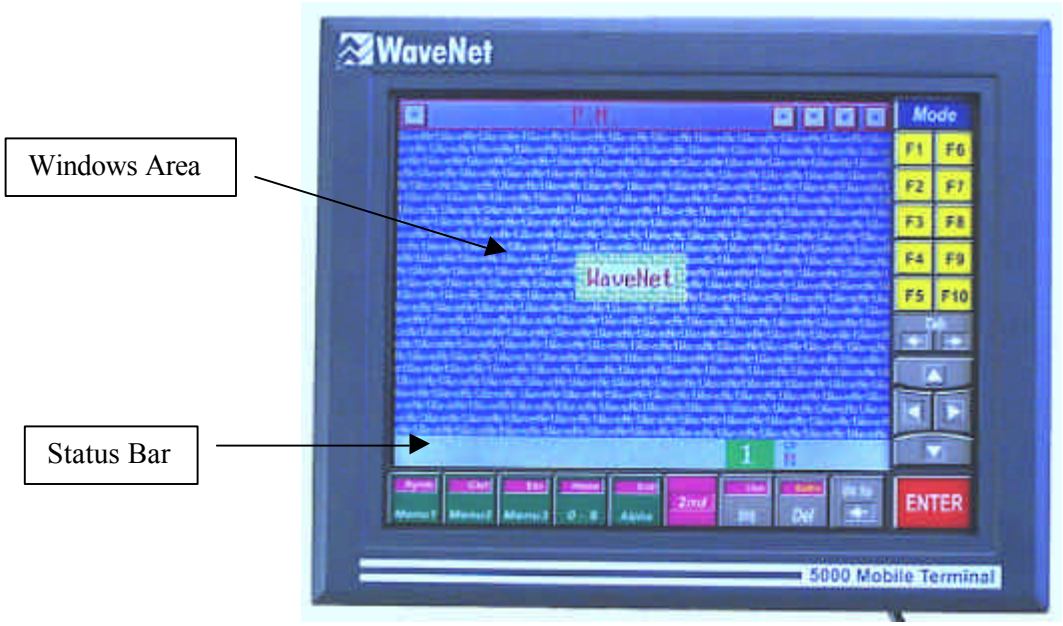

Figure 3-2 The Display Area

The Keypad Overlay

The keypad overlay supports various utility groups of touch-sensitive keys:

- ?? Navigation keys
- ?? Function keys
- ?? Pop-up keyboard toggles
- ?? Text editor keys

The following figure identifies the various groups of overlay touch keys.

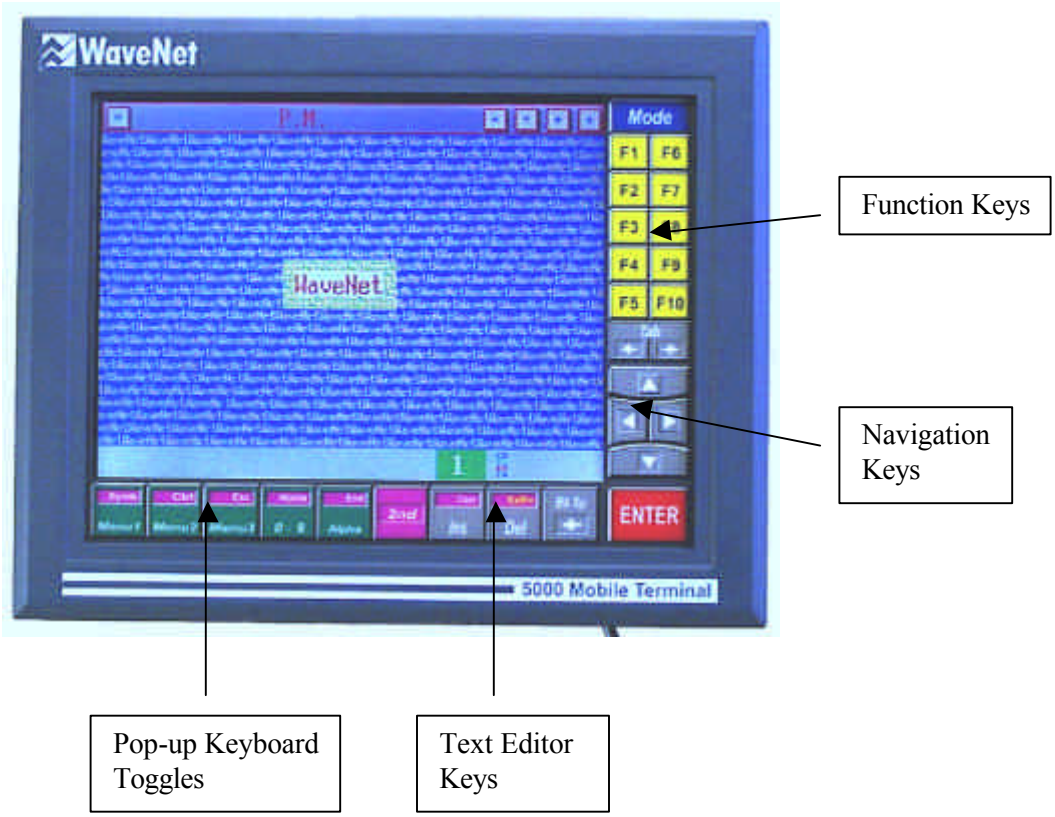

Figure 3-3 The Touch Keypad Overlay

About Touch Responses

The touch screen area contains touch-sensitive and non-touch-sensitive areas. There are two types of touch feedback; beep sound and graphic cursor.

In general, when you touch a window or the keypad overlay and then remove your contact, a beep sound will occur to acknowledge that your touch has been recognized. There is no beep acknowledgment when you touch a point on a non-window area within the display area.

Whenever you touch a touch-sensitive area, a cursor in the form of a cross will appear under the contact point. Sliding the contact point across the display area will cause the touch cursor to track the movement. When the touch contact is removed, the cursor will disappear.

The status bar is not touch-sensitive.

DISPLAY WINDOWS

Multiple display windows can appear on the touch screen at the same time. Each window has a horizontal title bar along the top of the window. When a window is inactive, only the name of the window shows in the title bar. When a window is active, the name of the window plus five window

control buttons show in the title bar. Only one window can be in the active state at a time. An inactive window can be made active by touching it anywhere within its borders.

There are four types of display windows; each type is distinguished by a unique window menu structure:

- ?? Presentation Manager window (1 only)
- ?? Radio Manager window (1 only)
- ?? Session Manager windows (minimum of 1, maximum of 8)
- ?? Console window (1 only, optional, no menu)

The following figure shows four tiled windows (one of each type). This figure does not show any of the window menu bars. This figure shows the Presentation Manager (P.M.) window as the active window.

Figure 3-4 Example Multiple Windows

Window Switching

You can switch among the available windows to make a particular window active and have it appear at the front of all the windows, by using the touch screen overlay keypad.

You can switch from the current active window to the previous activated window by touching the <***2nd***> key and then touching the **Tab Left key**.

You can switch from the current active window to the next available window by touching the <***2nd***> key and then touching the **Tab Right key**.

You must use the <***2nd***> key each time you repeat a switch operation. Note that the touch screen's <***2nd***> key is equivalent to the <**Alt**> key on a PC keyboard.

Alternately (see Chapter 4 - Using the Presentation Manager), you can switch windows by using the **Tasks or Global menu**. Also, any particular arrangement of windows can be saved by enabling security for the windows via the **Tasks menu** - this allows the windows arrangement to be automatically presented whenever the MT unit is restarted

Window Controls

Any active window shows five window control buttons in its title bar. Each control button is touch-sensitive while the title bar itself is not touch-sensitive.

In addition to the active window control buttons, there are two window scroll bar control tabs (~2x2 mm square); one along the bottom border and one along the right border.

The subsequent sections discuss the utilization of the following window control buttons and tabs:

- ?? Min/Max button (Square symbol)
- ?? Contrast buttons (Up-arrow & Down-arrow symbols)
- ?? Location button (Diamond symbol)
- ?? Size button (Plus-sign symbol)
- ?? Horizontal Scroll tab
- ?? Vertical Scroll tab

Some of these controls allow the re-sizing or re-positioning of a window. The re-sizing and re-positioning controls can be disabled by enabling security for the window (see Chapter 4 - Using the Presentation Manager).

The following figure shows a generic active window with its controls identified:

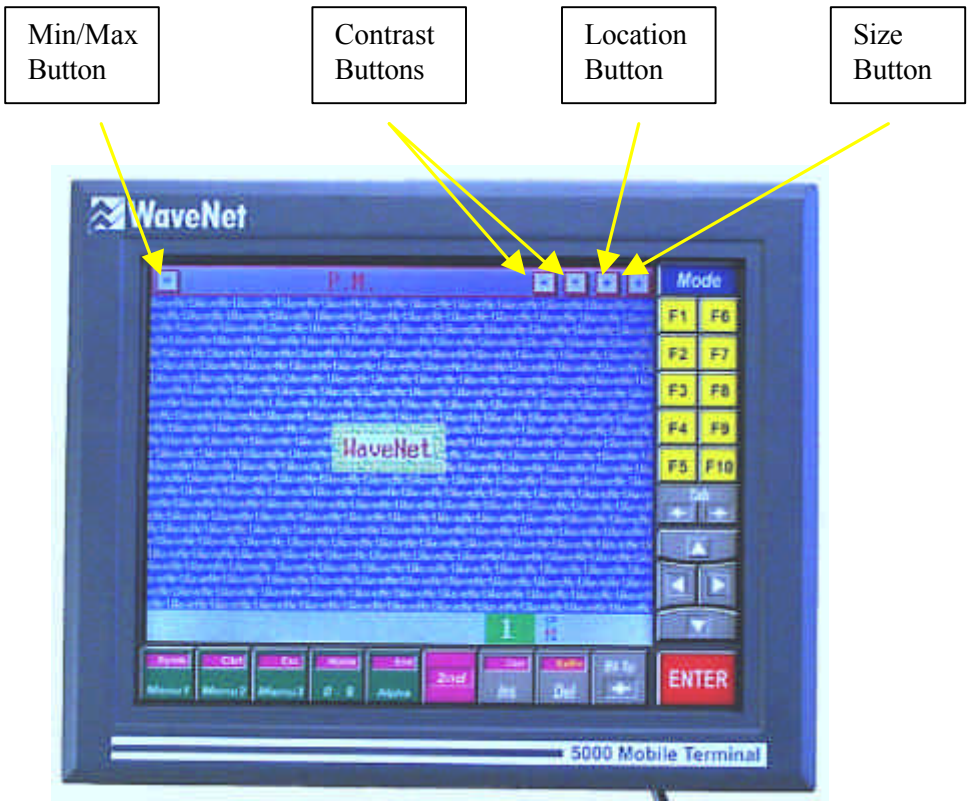

Figure 3-5 The Window Controls

Full/Partial Sizing

You can toggle the active window between the full size and a pre-set partial size, by repeatedly touching the **Min/Max button** (Square symbol). A full sized window has no visible window border. A partial sized window has a visible window border.

The full size covers the complete windows area of the touch-screen.

A partial size is set by using other controls. If there is no pre-set partial size, use the **Global menu** (see Chapter 4 - Using the Presentation Manager) for tiling or cascading the current windows - this will provide a default partial size. Then use the **Size button** (Plus-sign symbol) for incremental sizing, in conjunction with the **Location button** (Diamond symbol) for incremental relocating if required.

Incremental Sizing

You can incrementally resize a partial sized active window by touching the **Size button** (Plus-sign symbol), sliding the touch contact point across the touch screen to the desired location, and then removing the touch which will cause the window to reappear with the new size.

The lower left corner location of the window remains unchanged, while the upper right corner moves to the selected location. A window sizing operation can result in maintaining the original shape or in creating a new shape.

Positioning

You can drag the active window from one location to another within the display area by touching the **Location button** (Diamond symbol), sliding the touch contact point across the touch screen to the desired location, and then removing the touch which will cause the window to reappear at the new location.

The upper right corner of the window will be positioned at the new location.

Scrolling

Each partial sized window is framed with a border. Along each of the right vertical and bottom horizontal borders is a square scroll tab.

You can incrementally scroll the window display by touching the **Horizontal** or **Vertical scroll tab**, sliding the touch contact point along the border to the desired location, and then removing the touch which will cause the window contents to redisplay at the new scroll setting.

Alternately, you can scroll vertically by using the **C_UP** or **C_DOWN** cursor keys in conjunction with the <***2nd***> key, or scroll horizontally by using the **C_LEFT** or **C_RIGHT** cursor keys in conjunction with the <***2nd***> key (see Figure 3-3).

Contrast Level

You can adjust the contrast level of the display area up or down by using any of the two **Contrast buttons** (Up-arrow & Down-arrow symbols).

This adjustment facilitates optimal display viewing under particular ambient lighting conditions.

Menu Navigation

Each window type supports a unique pop-up menu structure just below the window's title bar. A menu structure consists of a pop-up menu bar and of various drop-down menu item lists.

You can initially pop up the menu bar for any active window by touching the <***Mode***> key on the overlay keypad. The first menu item will be highlighted in reverse video - this indicates the current location of the menu cursor.

You can move the menu cursor (navigate) within the menu of an active window by touching any visible non-highlighted menu item. Touching a highlighted menu item will display a drop-down list of the next lower level menu items. Menu items that are indented do not have drop-down lists. Non-indented menu items do have drop-down lists.

Alternately, you can navigate the menu by using the cursor arrow keys on the overlay keypad for left/right and up/down movement of the menu cursor.

Once the desired menu item has been located with the menu cursor (highlighted item), you can enable the menu item by touching it again or by touching the **<ENTER>** key.

You can remove each successive menu sub-level and eventually remove the menu bar from the active window by repeatedly touching the <***Mode***> key.

The use of the **<*Mode*>** key can be password protected to prevent unauthorized access to the menus (see the section on Security in Chapter 4).

POP-UP KEYBOARDS

The touch screen display area supports a variety of pop-up keyboards that are used for entering data. The MT unit provides 10 standard pre-defined keyboards and up to 4 user-defined custom keyboards (see Chapter 4 - Using the Presentation Manager). Only one keyboard can be popped up at a time.

You can pop up any keyboard by touching a specific overlay key or key sequence. These keys can be user-assigned as hot keys (see the next section on Hot Keys). Hot keys can be exchanged, replaced or removed. Removing a keyboard hot key assignment is a way of preventing the use of a particular keyboard.

A list of all the available pop-up keyboards can be viewed via the Presentation Manager's **KB Assign menu**. Initially, the MT unit provides default hot key assignments to 6 of the 10 standard keyboards. A default hot key assignment can be changed.

A popped up keyboard provides a text entry field with a flashing text cursor. You can enter text in the entry field by touching the appropriate keys of the pop-up keyboard. Text editing keys are available on the overlay keypad, as follows:

- ?? **<*Del*>** key for deleting a character
- ?? **<*Bk Sp*>** key for back space operation
- ?? **<*Ins*>** key for inserting a character

To remove any popped up keyboard, touch the hot key(s), which displayed the keyboard, or touch the screen anywhere outside the keyboard area and within the windows display area.

See Chapter 7 for information on how to design a custom keyboard.

HOT KEYS

A hot key or a hot key sequence is an available and unique overlay key or key sequence that can be assigned to a valid menu item. You can use these hot keys as an alternate way of calling up the user-assigned menu items.

You can assign hot keys to:

- ?? any standard or custom pop-up keyboard.

?? any Presentation Manager window **Global menu** item.

Once a hot key sequence has been assigned, you can use these keys, regardless of which window is active.

Assigning

In general, you can use any overlay key or key sequence that is not already used for a pre-defined function or hot key, to assign a new and unique hot key.

Typical examples of hot key sequences are as follows:

?? <***2nd*** ><any other available overlay key>
?? <***2nd*** ><**Ctrl**><any other available overlay key>
?? <***2nd*** ><**Ctrl**><***2nd*** ><any other available overlay key>

? *<**2nd** ><**Ctrl>** key sequence is equivalent to a <**Ctrl**> key and <**2nd** ><**Ctrl**><**2nd** > key sequence is equivalent to a <**Shft**> key*

Before assigning Hot keys to menu items, you should maximize the size of the active window, pop up the menu bar , and select the menu item to be hot-keyed.

To assign a Hot key to a selected menu item, use the following typical procedure:

1) Touch the <F2> key. A pop-up field for showing the current hot key sequence will be displayed adjacent to the menu item.
2) Touch the <2nd> or <Ctrl> or <Shft> key and then touch the <Mode> key or any one of <F1 through F10> keys. The selected hot key sequence will show in the pop-up key field. If this hot key sequence already exists for another menu item, that menu item function will be enacted. In this case, touch the <ENTER> key twice and repeat the procedure while choosing another hot key sequence.
3) Touch the <ENTER> key. The selected menu item will now show the new hot key assignment.

Whenever the assigned hot keys are touched, the corresponding menu item function will be enacted.

The following example procedure illustrates assigning the hot key sequence <***2nd***><***Mode***> to the **Tile menu** item in the Parameter Manager's **Global menu**.

1) Select the Tile menu item.
2) Touch the <F2> key.
3) Touch the <2nd> <Mode> key sequence.
4) Touch the <ENTER> key.

From now on, whenever the key sequence ***<2nd> <Mode>*** is touched, the current windows will re-display in a tiled arrangement.

Removing

You can remove hot keys from assigned menu items.

To remove a hot key from a selected menu item, use the following procedure:

5) Touch the <F2> key. A pop-up field for showing the current hot key sequence will be displayed adjacent to the menu item.
6) Touch the <*Bk Sp*> key (Back Space). The hot key sequence entry in the pop-up field will be deleted.
7) Touch the <ENTER> key. The selected menu item will no longer show a hot key assignment.

RADIO GAUGES

The MT unit provides a graphic display of diagnostic information about RF communications occurring between the MT unit and a 7000 Base Controller or 6000 Access Point unit. The graphic display is in the form of 4 horizontal bar gauges corresponding to 4 labeled indicators that appear on the Status Bar. (See Figure 3-6) The gauge length indicates the activity level of a communication parameter.

The 4 parameter indicators are:

?? CD (Carrier Detection)
?? RX (Receiving Data)
?? ER (Experiencing DataCom Errors)
?? TX (Transmitting Data)

During normal communications, the gauge bars beside the indicators may vary in length.

Figure 3-6 Radio Gauges

Chapter 4 : Using the Presentation Manager

This chapter explains how to utilize the Presentation Manager window menu functions of the 5000 Mobile Terminal (MT) unit.

This chapter discusses the menu functions associated with:

- ?? Windows (listing, arranging, switching, sample graphics)
- ?? Security Options (passwords, levels)
- ?? Touch Calibration
- ?? Keyboard Customization
- ?? Bar-Code Toggle
- ?? Voice Channel
- ?? Saving the Settings

PRESENTATION WINDOW MENUS

The Presentation Manager window supports a menu structure consisting of a pop-up menu bar and a hierarchy of drop-down lists of menu items. You can touch the <***Mode***> key to pop up the menu bar. See the section on Menu Navigation in Chapter 3 for general operational details.

The following table illustrates the scope of all the menu item options:

Tasks	Global	Local	Debug	KeyBoard	About
Protect					
Password					
MenuPassword					
P.M.					
Radio					
Session(s)					
	NextApp				
	PrevApp				
	Tile				
	Casc				
	Voice				
		Features			
		WaveNet			
		BigWave			
		WaveDemo			

Tasks	Global	Local	Debug	KeyBoard	About
		Colors			
		Blocks			
		Blocksx			
		WritePrms			
		TouchCharON			
		Calibrate			
		TouchUpdate			
		CalibrateSave			
		BarCode			
		CodeId			
		AddCR			
			Touch		
			Input		
			Debug		
				KBDesign	
				KB Size	
				KB Def	
				Row Offset	
				Key Size	
				Key Title	
				KB Assign	
				Num1KB	
				Alpha1KB	
				Alpha2KB	
				Symb1KB	
				Alpha3KB	
				Alpha4KB	
				Num2KB	
				FuncKB	
				VT220KB	
				F11-F30KB	
				CKB Assign	
				KB Handling	
				KB Review	
				KB Rename	
					Eprom
					OS
					Menu
					System
					P.M.
					Radio
					Ansi

Table 4-1 Presentation Window Menu Map

WINDOWS

You can view a list of the current touch screen windows by touching the **Tasks** menu bar item to drop down a menu items list.

Listing

All the menu items below the menu item **MenuPassword** constitute the list of the current windows. This list contains the P.M. (Presentation Manager) window entry, the Radio window entry, and at least one Session window entry. The Session window is indicated by a user-defined name or by the default name “WaveNet Demo”. There may be up to 8 Session window entries listed. Also, there may be a Console window entry. The order of the window entries can change with any new activation of a window.

Adjacent to each window entry, may be an optional assigned security level code (F1, F2, or F3). See the section on Security in this chapter for details.

Touching any window entry twice, will make that window active (move it to the front of all the windows).

Arranging

You can arrange all the listed windows in one of two standard ways; tiled or cascaded. Touch the **Global** menu bar item, and then touch either the **Tile** or **Casc** menu item twice to tile or cascade the current windows.

Alternately, you may use the assigned hot key sequence (see section on Hot Keys in Chapter 3).

Switching

You can activate either the next available window or the previous available window by touching the **Global** menu bar item and then touching the **NextApp** or **PrevApp** menu item.

Alternately, you may use the assigned hot key sequence (see section on Hot Keys in Chapter 3).

See also, the section on Window Switching in Chapter 3.

Sample Graphics

You can display one of six pre-defined sample graphics by touching the **Local** menu bar item, then touching the **Features** menu item, and then twice-touching any one of the menu items. These graphic displays can be used as screen savers. You can clear the current display by touching anywhere in the Function key region (**F1 - F10**) of the overlay keypad.

The named sample graphics are as follows:

?? **WaveNet**: small WaveNet logo.
?? **BigWave**: large WaveNet logo.
?? **WaveDemo**: animation sequence of WaveNet trademarks with brief explanations; includes a pop-up menu for selecting individual trademark screens.
?? **Colors**: vertical color test pattern.
?? **Blocks**: random sequence of various sized and colored blocks.
?? **Blocksx**: random sequence of high density multi-colored patterns.

SECURITY OPTIONS

Access to certain operations of the MT unit can be secured via user password and configuration level assignments.

Passwords

There are two types of passwords:

?? **Log-on:** this prevents unauthorized use of the complete MT unit.
?? **Window menus**: this prevents unauthorized access to the menu bars of windows, with F2 or F3 configuration level assignments that have menu protection currently enabled.

Log-on

You may assign a new log-on password if you have access to the P.M. window (i.e. there is no previous password assigned or a current password is known) and access to the menu bar (i.e. this window does not have menu protection enabled). Any password is case-sensitive. In addition, you may remove the current password if you have access to the menu bar.

To assign a new log-on password, use the procedure:

1) Touch the **Tasks** menu bar item.
2) Touch twice, the **Password** menu item. A text entry keyboard (New password) will pop up for about 10 seconds, within which you must enter your password (up to 7 characters) and touch the <**ENTER**> key. You will then be prompted with “Confirm password:”; you must re-enter your password and touch the <**ENTER**> key before a 10 second time-out.
3) Touch the **Local** menu bar item.
4) Touch the **WritePrms** menu item to write the password to the MT unit’s configuration memory.

Whenever you restart the MT unit, you will be prompted for a password.

To remove the current password, use the procedure:

Repeat all the steps to assigning a new password, except do not enter any text characters.

Whenever you restart the MT unit, there will be no prompt for a password.

Window Menus

You may assign a new window menus password if you have access to the P.M. window's menu bar. Any password is case-sensitive. In addition, you may remove the current password if you know the password.

This password is used in conjunction with windows which have F2 or F3 configuration level assignments (see the section on Configuration Levels, in this chapter).

This password can be assigned and saved once, but be enabled each time after each use. This feature allows a user to quickly protect against unauthorized access to particular window menu bars in the event that the MT unit is temporarily unattended.

To assign a new menus password, use the procedure:

1) Touch the **Tasks** menu bar item.
2) Touch twice, the **MenuPassword** menu item. A text entry keyboard (New password) will pop up for about 10 seconds, within which you must enter your password (up to 7 characters) and touch the <**ENTER**> key. You will then be prompted with "Confirm password:"; you must re-enter your password and touch the <**ENTER**> key before a 10 second time-out.
3) Touch the **Local** menu bar item.
4) Touch the **WritePrms** menu item to write the password to the MT unit's configuration memory.

To remove the current password, use the procedure:

Repeat all the steps to assigning a new password, except do not enter any text characters.

To enable the menu password protection, use the procedure:

1) Touch the Tasks menu bar item.
2) Touch twice, the Protect menu item. This will enable the menu password protection without having to reboot the MT unit. That is, whenever the <Mode> key is touched for an active window that is assigned a configuration level of F2 or F3, a text entry keyboard will pop up and prompt for a password. Once a valid password has been entered, touching the <Mode> key again will pop up the menu bar, and the protection will be disabled.

Configuration Levels

A configuration security level can be assigned (similar to hot key assignment) to any window listed in the **Tasks** drop-down menu items list. There are three possible assignments that define increasing limits to window functionality:

?? F1 - No limits to window functionality.
?? F2 - Menu password protection is available.

?? F3 - Only full screen operation is allowed, and menu password protection is available.

The configuration security level of the active window is indicated on the Status Bar. The square appearing at the left of the radio gauges contains the current security level number.

To assign a configuration security level to a selected window, use the procedure:

1) Touch the Tasks menu bar item.
2) Touch the applicable window menu item.
3) Touch the <F2> key.
4) Touch the <F1> or <F2 > or <F3 > key for level 1or 2 or 3.
5) Touch the <ENTER> key.

See also, the section on Hot Keys, in Chapter 3.

Ensure that the menu password is also assigned (see previous section on Window Menus, in this chapter).

TOUCH SCREEN CALIBRATION

The resistive or capacitive touch membrane covering the display surface may be calibrated for position accuracy. This procedure is not required on a regular basis and should only be undertaken if you are certain the calibration has drifted over time. Reasons for it drifting may include exposure to extremes of temperature or an extended shelf life where the pre-set calibration has been lost.

Checking for Calibration

Place your finger or other object in the case of resistive screens on the touch screen. A cursor should appear underneath if the screen is in calibration. If not the cursor will appear offset somewhere else on the screen.

Figure 4-1 Offset Cursor

There are degrees of drift in calibration. If the calibration is not serious you will be able to use the screen to re-calibrate. Do this by dragging your finger across the screen until the cursor is over the menu item you want. Where the drift has been large or where the settings have been lost you will need to use a keyboard to reset them.

Using the Touch Screen to Re-Calibrate

Using the Presentation Manager window select the Local option. This will display a menu item named 'Calibrate'. Touch this twice to activate the option. A window opens up on the lower left portion of the screen containing values representing the touch co-ordinates. You are asked to touch the upper right (UR) corner and then the lower left (LL) corner in turn. This action gives the unit co-ordinates for the screen. In the Local Menu select 'WritePrms' to save the new settings. Complete the process by touching 'Mode' to exit the Local Menu.

If your unit has a resistive screen there is an additional step. In the Tasks Menu select 'Protect' and then exit.

Figure 4-2 Touching the UR Corner

? *The Upper Right (UR) and Lower Left (LL) correspond to the viewing screen not the corner of the enclosure.*

Using a Keyboard to Re-calibrate

Plug a standard keyboard into the port in the bottom of the unit. Press Alt+M to access the menu. From there use the arrow keys to navigate the menu items and follow the procedure outlined in the preceding paragraph – Using the Touch Screen to Re-calibrate.

Removing the Co-ordinate Window

The cursor co-ordinate window remains on the screen. To remove it Select 'Touch' in the Debug Menu and then 'Mode' to exit. For capacitive units this completes the calibration procedure.

BARCODE TOGGLING

The bar code scanner may be toggled on or off at any time. The action of going from one state to the other is known as 'toggling'.

To use this feature select the Program Manager window and in it the Local Menu item.
From the Local menu select BarCode. A diamond will appear against it indicating selection.

Saving the Setting

To save your new configuration select 'WritePrms' from the same menu list. Your unit however does require re-booting for the new parameters to take effect. Do this by touching <**2**nd>twice, powering off and then powering up.

Chapter 5 : Using the Radio Manager

This chapter explains how to utilize the Radio Session Menu Bar of the 5000 Mobile Terminal unit.

This chapter discusses the menu items associated with:

?? Setup
?? Test Options
?? Monitor Options
?? The AssignKey
?? RF Site Survey Keys

? **CAUTION**! *Procedures detailed in this Chapter should only be performed by certified WaveNet technicians. Unauthorized use of the radio spectrum may occur, or significant degredation of the 5000's performance may result, or significant degradation of the WaveNet Wireless LAN system may result if the following configuration parameters are not correctly set.*

RADIO SESSION MENU BAR

The Radio Manager window supports a menu structure consisting of a pop-up menu bar and a hierarchy of drop-down lists of menu items. When this window is active, you can press the <Mode> key to activate the menu bar. See the section on 'Menu Navigation' in Chapter 3 for general operational details.

Narrow Band Radio Systems

The following outline illustrates the menu bar and the scope and organization of the menu item which are unique to **WaveNet Wireless LAN Narrow Band** systems:

Menu Bar Item	1st Sub-Menu	2nd Sub-Menu	Comments
SETUP	Parameters	Header Size	Size (in characters) of synchronization header (default = 12)
		Channel	RF channel used when the 3000 first powers up
		ChanSelect	RF channels which can be switched to (consequetive numbers indicate order) when the 5000 performs cellular channel switching
		Node Address	Unique radio data network address for the 3000
		14.4	14.4 Kbps radio data link speed
		9600	9600 bps radio data link speed
		7200	7200 bps radio data link speed
	Frequencies	1:	Center channel frequency for Radio Channel 1
		2:	Center channel frequency for Radio Channel 2

Menu Bar Item	1st Sub-Menu	2nd Sub-Menu	Comments
		3:	Center channel frequency for Radio Channel 3
		4:	Center channel frequency for Radio Channel 4
		5:	Center channel frequency for Radio Channel 5
		6:	Center channel frequency for Radio Channel 6
		7:	Center channel frequency for Radio Channel 7
		8:	Center channel frequency for Radio Channel 8
	SaveParam's		Save current radio configuration in memory
	CloneParam's	Debug	Turns on additional on-screen reporting during the parameter cloning process
		NewVer	Sets the version number to be used after the cloning process
		OldVer	Sets the version number of current parameters
		AllVersions	Clones parameters, regardless of version numbers
		Reboot	Configures cloned parameter recepient terminal to re-start after cloned parameters received
		Clone	Starts the cloning process
TESTS	Frequency		Sets the frequency of the tests
	Adjust	Power	Adjusts the radio RF ouput power through use of the TAB key when selected.
		Speaker	Adjusts the speaker volume through use of the TAB key when selected
		Deviation	Adjusts the radio deviation through use of the TAB key when selected
		Frequency	Adjusts the radio frequency error through use of the TAB key when selected
	StopAll		Stops all radio functions when selected
	StopTest		Stops the current test when selected
	XmitLong		Transmits a long test pattern when selected
	RcvAnalog		Receives an analog signal when selected
	Voice		Turns on voice operation when selected
	RcvMsg		Receives a data message when selected
	XmtBro		Continuously broadcasts a test message when selected
	XmtBro(20)		Broadcasts a test message 20 times when selected
	XmtMsg		Transmit the entered characters when selected
MONITOR	Data	Receive	Provides real time display of received data
		Xmit	Provides real time display of transmitted data
		Error	Provides real time display of received data in error
	Stats		Displays current radio statistics
	Info		Displays summary of radio configuration
	RcvBro		Provides real time display of received network broadcasts
	Mac		Provides real time display of MAC level activity
	Net		Provides real time display of NET level activity
	Rout		Provides real time display of current routes
	Sess		Provides real time display of SESS level activity
ASSIGNKEY			Assigns text string of up to 15 characters to a Hot Key (used with radio tests)

900 MHz Radio Systems

The following outline illustrates the menu bar and the scope and organization of the menu item which are unique to **WaveNet Wireless LAN 900 MHz Spread Spectrum** systems:

Menu Bar Item	1st Sub-Menu	2nd Sub-Menu	Comments
SETUP (Spread Spectrum)	Parameters	Channel	RF channel used when the 3000 first powers up
		ChanSelect	RF channels which can be switched to (consequetive numbers indicate order) when the 5000 performs cellular channel switching
		Node Address	Unique radio data network address for the 3000
	SaveParam's		Save current radio configuration in memory
	CloneParam's	Debug	Turns on additional on-screen reporting during the parameter cloning process
		NewVer	Sets the version number to be used after the cloning process
		OldVer	Sets the version number of current parameters
		AllVersions	Clones parameters, regardless of version numbers
		Reboot	Configures cloned parameter recepient terminal to re-start after cloned parameters received
		Clone	Starts the cloning process
TESTS	Adjust	Power	Not functional in 900 MHz radio systems.
		Speaker	Not functional in 900 MHz radio systems.
		Deviation	Not functional in 900 MHz radio systems.
		Frequency	Not functional in 900 MHz radio systems.
	StopAll		Stops all radio functions when selected
	StopTest		Stops the current test when selected
	XmitLong		Transmits a long test pattern when selected
	RcvAnalog		Receives an analog signal when selected
	Voice		Not functional in 900 MHz radio systems.
	RcvMsg		Receives a data message when selected
	XmtBro		Continuously broadcasts a test message when selected
	XmtBro(20)		Broadcasts a test message 20 times when selected
	XmtMsg		Transmit the entered characters when selected
MONITOR	Data	Receive	Provides real time display of received data
		Xmit	Provides real time display of transmitted data
		Error	Provides real time display of received data in error
	Stats		Displays current radio statistics
	Info		Displays summary of radio configuration
	RcvBro		Provides real time display of received network broadcasts
	Mac		Provides real time display of MAC level activity
	Net		Provides real time display of NET level activity
	Rout		Provides real time display of current routes
	Sess		Provides real time display of SESS level activity
ASSIGNKEY			Assigns text string of up to 15 characters to a Hot Key (used with radio tests)

2.4 GHz (Aironet) Radio Systems

The following outline illustrates the menu bar and the scope and organization of the menu item which are unique to **WaveNet Wireless LAN 2.4 GHz (Aironet) Spread Spectrum** systems:

Menu Bar Item	1st Sub-Menu	2nd Sub-Menu	Comments
SETUP	Parameters	Node Address	Not used for Aironet 2.4 GHz systems. Normally set to 1.
	SaveParam's		Save current radio configuration in memory
	CloneParam's	Debug	Turns on additional on-screen reporting during the parameter cloning process
		NewVer	Sets the version number to be used after the cloning process
		OldVer	Sets the version number of current parameters
		AllVersions	Clones parameters, regardless of version numbers
		Reboot	Configures cloned parameter recepient terminal to re-start after cloned parameters received
		Clone	Starts the cloning process
MONITOR	Stats		Displays current radio statistics
	Info		Displays summary of radio configuration
	Mac		Provides real time display of MAC level activity
	Net		Provides real time display of NET level activity
	Rout		Provides real time display of current routes
	Sess		Provides real time display of SESS level activity
ASSIGNKEY			Assigns text string of up to 15 characters to a Hot Key (used with radio tests)

RADIO\SETUP MENU ITEMS

Radio Operational Parameters (Parameters Menu Items)

You can modify any of the main radio parameters by selecting the Parameters menu item in the Setup menu.

The radio parameters are as follows (**Narrow Band**):

HeaderSize The number of radio message headers to be transmitted before actual message transmission begins (default = 12).

Channel The first radio channel number used when the 5000 initializes (default = 1).

ChanSelect The channels and which the 5000 can search when in cellular operation (default = 1, non-cellular mode). Since any channel number is a single digit, the channel numbers can be entered with no spaces or commas. For example, 234 represents channel numbers 2, 3, and 4. The order of entry is the search order used by the 3000 when a cellular search is performed.

NodeAddress A unique network node address number (1 - 65555) for the 5000.

Bit Rate One of three possible rates: 14.4 Kbps, 9600 bps, or 7200 bps. Only one can be selected.

The first four parameters are each entered via a numeric keyboard which pops up when the corresponding menu item is selected. The fifth parameter is one item selected from the three corresponding menu items.

These parameters are only slightly different for the **WaveNet Wireless LAN 900 MHz Spread Spectrum** systems:

Channel The first radio channel number used when the 5000 initializates (default = 1).
ChanSelect The channels and which the 5000 can search when in cellular operation (default = 1, non-cellular mode). Since any channel number is a single digit, the channel numbers can be entered with no spaces or commas. For example, 234 represents channel numbers 2, 3, and 4. The order of entry is the search order used by the 3000 when a cellular search is performed.
NodeAddress A unique network node address number (1 - 65555) for the 5000.

In the WaveNet Wireless LAN Spread Spectrum systems, the Header and Bit Rate parameters are not used, as these configurations are pre-set.

There are few parameters necessary for **WaveNet Wireless LAN 2.4 GHz (Aironet) Spread Spectrum** systems. These parameters are available only on the Command Line Interface, accessible on the Console Port of the terminal:

Command *	Syntax	Value
Power Save Mode	> air CP <value>	0 = CAM (default) 1 = PSP 2 = Fast PSP
Radio SSID	> air CS <value>	Text Name (default = tsunami)
Identification Name	> air CN <value>	Text Name (default = none)

* Refer to PC4500 User Manual

? *"> air P" is used to save any changed parameter settings.*

? *The SSID in the Aironet Access Point configuration must match the SSID configured in the WaveNet Terminal. If this condition is not met, then the WaveNet terminal will not "associate" with the Aironet Access Point and no radio data communications will result.*

? *If no SSID (SSID of "") is set in the WaveNet Terminal, then it will freely associate with any Aironet Access Point. However, this may not be desirable in all installations.*

Narrow Band Frequencies (Frequencies Items)

If a Narrow Band radio has been installed, the available radio frequencies are determined by the frequencies licensed and assigned to the site. These frequencies need to be assigned to specific channels. The assignments can be in any order.

You may assign a licensed frequency to a channel by selecting the Frequencies menu item in the Setup menu, which will produce a list of 8 channel numbers. Selecting a 'channel number' menu item will pop up a numeric keyboard. Enter a frequency (MHz) in the format of xxx.xxxx.

Parameter Cloning (CloneParam's Items)

The WaveNet Wireless LAN technology allows the cloning of one 5000's parameter setup (excluding terminal-unique parameters) onto one or more other 5000s in the network, via radio data transmission.

To clone the current parameter setup, use the procedure:

1) Select the **CloneParam's** menu item in the **Setup** menu.
2) Select the **NewVer** menu item, which will pop up a numeric keyboard. Add 1 to the current value and enter the new value.
3) Select the **OldVer** menu item, which will pop up a numeric keyboard. Add 1 to the current value and enter the new value.
4) Enable each of the menu items, **Debug**, **AllVersions**, and **Reboot**.
5) Activate the menu item **Clone** - this will cause the 5000 to transmit it's current parameter setup to other receptive 5000s.

RADIO\TEST MENU ITEMS

Test options are available for analyzing or troubleshooting radio operations. Testing is done by WaveNet certified technical support personnel. The test parameters are accessed via the Tests menu and *are not applicable to all radio systems*. This menu allows the following actions:

?? Selecting a test radio frequency (Frq:).
?? Adjusting RF Power output, Speaker volume level, Deviation, or frequency (Freq.) error. Each of these adjustments are accomplished by pressing the Tab Right key for increasing a value or the Tab Left key for decreasing a value.
?? Entering a test message (XmtMsg) up to 8 characters. The message will show on the menu item.
?? Broadcasting (XmtBro) the test message continuously.
?? Broadcasting (XmtBro(20)) the test message 20 times only.
?? Transmitting (XmitLong) a 'long' test message.
?? Stopping the current test (StopTest).
?? Stopping all radio operations (StopAll).
?? Receiving messages (RcvMsg).
?? Enabling/disabling Voice operation which disables/enables data operation. This causes the radio (Narrow Band only) to switch to Channel 8 for analog voice operation.

?? Receiving an analog signal (RcvAnalog).

RADIO\MONITORING MENU ITEMS

Data monitoring options are available for analyzing or troubleshooting communication operations. Monitoring is usually done by WaveNet certified technical support personnel. The monitoring options are accessed via the Monitor menu (*not available in all radio systems*). This menu allows the following actions:

?? Enabling/disabling the monitoring of up to three kinds of Data; Receive, Transmit (Xmit), or Error.
?? Displaying of radio statistics (Stats).
?? Displaying of radio configuration information (Info).
?? Displaying of receive broadcast (RcvBro) history.
?? Enabling/disabling MAC layer (Mac) monitoring.
?? Enabling/disabling NET layer (Net) monitoring.
?? Enabling/disabling route information (Rout) monitoring.
?? Enabling/disabling SESSION layer (Sess) monitoring.

RADIO/ASSIGNKEY MENU ITEMS

The AssignKey menu item provides a way of assigning a text string up to 15 characters to any key on the overlay keypad. The assignment allows the repeated entry of a text string by using only one or two keys.

RF SITE SURVEY KEYS

Narrow Band and 900 MHz Radio Site Surveys

An RF site survey involves the transmitting of pre-defined messages to a reference terminal which returns the messages - the ensuing statistics provide the RF coverage measurements.

Three Function keys F3, F4, and F8 are reserved for RF site surveys whenever the Radio window is the active window. A site survey is done by WaveNet certified technical support personnel. These function keys will only perform the described operations when the Menu Bar is not being used.

Pressing the F3 key will pop up (or remove) a dialogue box for entering site identification information and modifying any site survey parameters. Pop-up keyboards are used for entering data. You may select (activating a text cursor) any data field by pressing it or move across the data fields by pressing the cursor arrow keys or the tab keys.

Pressing the F4 key will toggle the text cursor between the dialogue box and the Radio window screen. The text cursor must be removed from the dialogue box before using the F3 key to remove the dialogue box.

Pressing the F8 key will start (or stop) the site survey test.

2.4 GHz (Aironet) Radio Site Surveys

Site survey facilities described above are not available with 2.4 GHz (Aironet) radio systems. The Aironet 2.4 GHz radio system is an IP based radio network and must use IP based utilities. One such utility, recommended for site survey use is the PING utility.

To use the PING utility, use the following steps:

1) Turn on the internal barcode reader in the Program Manager Menu system. If an internal barcode reader is already installed, then this step is not necessary. Save the parameters and reboot the terminal.
2) Switch to the CONSOLE task (automatically starts when the internal barcode reader is enabled).
3) Use the DNS task to set a DNS Name for the test IP (> dns set host <Name> <IP Number>. Note that the
4) Type ">ping <Name>" and ENTER to start the PING test. Note the <Name> is case sensitive.

Following is an example of a PING test:

```
>tcp ip addr en0
tcp>en0 IP Address is 192.168.0.40
>
>dns set host AP15 192.168.0.15
>dns save
dns>Host table saved (0)
dns>Port table saved (0)
>
>ping -c10 AP15
ping>PING AP15: 64 data bytes
ping>72 bytes from AP15: icmp_seq=0. time=50. ms
ping>72 bytes from AP15: icmp_seq=1. time=40. ms
ping>72 bytes from AP15: icmp_seq=2. time=40. ms
ping>72 bytes from AP15: icmp_seq=3. time=40. ms
ping>72 bytes from AP15: icmp_seq=4. time=40. ms
ping>72 bytes from AP15: icmp_seq=5. time=40. ms
ping>72 bytes from AP15: icmp_seq=6. time=40. ms
ping>72 bytes from AP15: icmp_seq=7. time=40. ms
ping>72 bytes from AP15: icmp_seq=8. time=40. ms
ping>72 bytes from AP15: icmp_seq=9. time=40. ms
ping>
ping>----AP15 PING Statistics----
ping>10 packets transmitted, 10 packets received, 0% packet loss
ping>round-trip (ms)  min/avg/max = 40/41/50
>
```

Note that the PING command "ping –c10 AP15" can be easily set as a command key to save retyping the command each time a test is conducted.

In general, 2.4 GHz systems are characterized by a rapid decrease in signal quality when the maximum communications distance is exceeded (as dictated by environmental conditions). If the PING test does not yield consistent results, and stops before the pre-set number of pings is completed, then the coverage is likely not sufficient for normal operation.

As well, 2.4 GHz are easily blocked by metallic and non-metallic objects. Ensure that any failure of the PING test (indicating inadequate coverage) is not simply a small "dead zone" by moving the terminal several feet to a alternate location and repeat the test.

RADIO STATISTICS SUMMARY

Pressing the F2 key when the Menu Bar is not being used will display a summary of current radio statistics, which is updated in real time during the display.

Narrow Band & 900 MHz Radio Systems

The following table explains the labels used for the displayed message statistics.

Statistic	Explanation
Rcv msg	The total number of messages received.
for us	The total number of messages directed to the unit of interest.
Chars	The total number of characters decoded.
Xmtmsg	The total number of messages transmitted from the unit.
re-xmit	The number of re-transmits the unit had to perform.
Xmterr	The number of times the unit needed to transmit but was not ready – most likely a hardware fault.
err:tot	The total number of errors.
Crcerr	Indicates the number of times bits were decoded but did not match the crc.
Decerr	Only part of the message was decoded.
Tmout	A message was expected but did not arrive – decoding failed due to radio errors or interference.
Cdoff	The total number of times in which the carrier detect was active, but no bits were decoded. This indicates other radio activity.
Glitch	Event count in which the carrier detect went active for a short period of time due to extraneous radio activity.

Statistic	Explanation
Xmtbro	The number of “broadcasts” the unit has sent.

The bottom of the statistic display also provides the following information:

1) The node number of the terminal
2) The channel of operation
3) The average response time (historical)
4) The current “valid” routes, through either wired or wireless 7000 Base Controllers, sensed by the terminal (the top route is the route currently in use). Routes through wireless repeaters are indicated as multiple 7000 Base Controllers (i.e. B1 B20), wile routes not using wireless repeaters are indicated as single 7000 Base Controllers (i.e. B2).

The final set of statistics show various indicators (tm, rx, qt, rssi) of the “quality” of the current route in use.

Aironet 2.4 GHz Radio System

Statistic	Explanation
Rcv msg	Not Used.
for us	Not Used.
Chars	Not Used.
Xmtmsg	Not Used.
Rcvsync	Indicates the number of sync messages received from an Access Point when terminal data traffic is idle.
Rcverr	Not Used.
Ignored	Indicates the number of valid messages received but not addressed to the terminal
Recv	Indicates the number of messages received
Xmit	Indicates the number of messages transmitted
800 (Recv)	Indicates the number of 800 type Ethernet packets received.
800 (Xmit)	Indicates the number of 800 type Ethernet packets transmitted.
806 (Recv)	Indicates the number of 806 type Ethernet packets received.
806 (Xmit)	Indicates the number of 806 type Ethernet packets transmitted.
Chars (Recv)	Indicates the number of Ethernet characters received..
Chars (Xmit)	Indicates the number of Ethernet characters transmitted.
Serial (Recv)	Indicates the number of serial line characters received.
Serial (Xmit)	Indicates the number of serial line characters transmitted.
Chars (Recv)	Indicates the total number of characters received.
Chars (Xmit)	Indicates the total number of characters transmitted.

The next line in the statistics display gives the Aironet PC Card type designator as read from the PC Card memory, and the Ethernet MAC Address of the PC Card.

The bottom of the statistic display also provides the following information:

1) The node number of the terminal (not used for 2.4 GHz radio systems)
2) The channel of operation (typically 2.4 for 2.4 GHz)
3) The serial interface speed (typically 115200 bps)

In addition, the command line of the console connection can be used for additional monitoring, for example:

```
>air s
air>SSID "WaveNet" MAC 00409613de23, Mode 3f Errc 0 SigQ 46
air>BSSI "AP4500_Photocopy" MAC 0040961449c5 000000000000 000000000000
000000000000
air> BeaconP/DTIM 100/1 HopP/# 200/1 Chan 6/0
```

The above shows the following information:

?? Terminal Station Identifier (SSID)
?? Terminal MAC Address
?? Base Station Station Identifier (the Access Point that the terminal is currently associated with)
?? Access Point MAC Address
?? Number of Hops to the Access Point that has direct access to the Ethernet backbone
?? Channel of operation

? *If the WaveNet terminal has no SSID configured (SSID of "") it will freely associate with any Aironet Access Point. In this case, the above command will simply show the SSID of the Aironet Access Point that the WaveNet terminal is currently associated with.*

In addition, the following command can also be used for additional information:

```
>air a
air>Status: -BO -BI -RTS  CTS reset 1 dcd 221/103 cts 1 baud 76800
air>xmt/err 110.110<962>/0 rcv/err 103.0<783>/0.0.74 Sync.Poll 102.613
```

This command gives information about:

?? Terminal to radio card interface speed
?? Transmitted messages and errors
?? Received messages and errors

Chapter 6 : Using the Session Manager

This chapter explains how to utilize the Session Manager window menu functions of the 5000 Mobile Terminal unit.

This chapter discusses the menu functions associated with:

- ?? Emulation Setting
- ?? Communication Settings
- ?? Display Settings
- ?? Pop-up Keyboard Settings
- ?? Barcode Tab Toggle
- ?? Cursor Captive Toggle
- ?? Serial I/O Toggle
- ?? Session Cloning
- ?? About Current Session

The terminal supports a minimum of 1 session window and a maximum of 8 session windows. Multiple session windows are enabled via session window cloning. Each window supports an identical menu structure. Each window can be assigned a user-defined name.

SESSION WINDOW MENUS

A Session Manager window supports a menu structure consisting of a pop-up menu bar and a hierarchy of drop-down lists of menu items. You can touch the <***Mode***> key to pop up the menu bar. See the section on 'Menu Navigation' in Chapter 3 for general operational details.

The following outline illustrates the menu bar and the scope and organization of the menu item options.

Setup	**About**
Emulation	Ver
WaveNet	Node
VT220	Sess
Unix	
Communication	
Service	
5250	
TN5250	
3270	
TN3270	
Telnet	
PC Link	
PC Link[2]	

PC Link[3]	
SLP-TCP	
Demo	
Session	
Copy	
Title	
Rename	
Delete	
Host ID = 0	
8 Bit = Yes	
Display	
Page Caching	
Character Set	
ASCII	
Chinese	
Korean	
Font	
F8x8	
F8x16	
TF8x16	
F16x32	
TF16x32	
Korean	
Chinese	
Font Map	
F8x8 =1	
F8x16 =2	
TF8x16 =3	
F16x32 =4	
TF16x32 =5	
Korean =0	
Chinese =6	
Screen size	
Rows =25	
Columns =80	
Origin Scroll	
Keyboard	
Pop-up	
Manual	
Always	
If Active	
On Touch	
Barcode Tab	
Cursor Captive	
Other	
Serial I/O = NO	

Table 6-1 The Session Manager Window Menu Structure

EMULATION SETTING

The MT unit supports three types of host application session terminal emulators:

?? WaveNet (ANSI)
?? VT220
?? Unix

You can select one of the emulators by selecting the **Emulation** menu item in the **Setup** menu, and then touching twice the chosen emulation menu option.

The VT220 emulation allows the Function keys **F1 - F4** to be used for the VT220 PF1 - PF4 keys.

COMMUNICATION SETTINGS

The communication settings for each session window involve:

?? Selecting the desired host communications service.
?? Entering the required host identifier.
?? Setting the number of data bits.

You can access these settings by selecting the **Communication** menu item in the **Setup** menu.

Host Service

Touch the **Service** menu item to display a list of possible host services. Touch twice to enable one of the following communication services:

??	5250	IBM 5250 data stream via SDLC/SNA.
??	TN5250	IBM 5250 data stream via TCP/IP/Telnet.
??	3270	IBM 3270 data stream via SDLC/SNA.
??	TN3270	IBM 3270 data stream via TCP/IP/Telnet.
??	Telnet	ANSI data stream via TCP/IP/Telnet.
??	PC Link	ANSI data stream via RS-232/WaveNet SIOP, per host 1.
??	PC Link[2]	ANSI data stream via RS-232/WaveNet SIOP, per host 2.
??	PC Link[3]	ANSI data stream via RS-232/WaveNet SIOP, per host 3.
??	SLP-TCP	ANSI data stream via TCP/IP/WaveNet SLP.
??	Demo	ANSI data stream per WaveNet host simulation.

Host ID

The host identification entry links the MT unit to the 7000 Base Controller that connects to the desired host. The chosen host ID must be the same as that assigned to the appropriate Base Controller. Any session window can reference the same or different host ID used by another session window. The default host ID is 0.

You can enter the host ID number via the **Host ID** menu item, which will pop up a numeric keyboard. The entered ID will show in the menu item.

Data Bits

You can use the menu item **8 Bit=** to set the number of data bits per data byte to either 7 or 8. Touch the menu item, which will pop up a keyboard, and enter **Yes** for 8 or **No** for 7. The default number is 8. **Yes** or **No** will show in the menu item.

DISPLAY SETTINGS

You can customize the display characteristics of a session window in terms of:

- ?? Page Caching
- ?? Character Set
- ?? Font
- ?? Font Map
- ?? Screen Size
- ?? Origin Scroll

You can access these customization options by selecting the **Display** menu item in the **Setup** menu.

Page Caching

You can set the number of pages for caching purposes via the **Page Caching** menu item which will pop up a numeric keyboard. The entered number of pages will show in the menu item. The new value will take effect upon rebooting the MT unit.

The default value is 0, which denotes that page caching is disabled.

Character Set

The MT unit can support one or more different character sets, depending on installation requirements and available memory. The current available character sets are:

- ?? ASCII

?? Chinese
?? Korean

A character set determines how the terminal will interpret the ASCII characters sent from a host computer, and establishes the graphical rendition the terminal will use for representing information from the host computer.

?? Selecting **ASCII** will enable use of either the F8x8, F8x16, TF8x16, F16x16, F16x32, TF16x32 and 24x24 English fonts, with ASCII single byte processing. Only these fonts should be used with this character set.
?? Selecting **Chinese** will enable use of the 24x24 Chinese standard font, with double byte ASCII processing enabled through use of MSB signaling. Only the 24x24 Chinese font should be used with this character set.
?? Selecting **Korean** will enable use of the 16x16 Korean standard font, with double byte ASCII processing enabled through use of MSB signaling. Only the 16x16 Korean font should be used with this character set.

The font references are names of font types that can be supported, depending on installation requirements and available memory. The current available fonts are listed via the **Font** menu item. See the section on 'Font' in this chapter.

Font

You can list the current available font types by selecting the **Font** menu item. You can enable the specific font by touching twice the appropriate menu item.

When selecting a font, you need to account for the screen size generated by the host and expected by the terminal. See also, the section on 'Screen Size' in this chapter.

Font Map

You can make use of font identifiers within host application sessions. The font identifiers are numbers that represent each of the fonts listed via the **Font** menu item. The MT unit provides a default set of identifiers. The identifiers are listed via the **Font Map** menu item. You may modify the identifiers via the appropriate menu item, which will pop up a keyboard. The entered identifier will show in the menu item.

Screen Size

You can select a window screen size by selecting the number of character rows and the number of character columns that would be visible in a full (maximized) window. The screen size settings need to be consistent with the font type selected in the **Font** menu (see the section on 'Font' in this chapter).

The following table correlates example font options with the screen size parameters, Rows and Columns.

Font	Rows	Columns
F8x8	24	80
F8x16	24	80
TF8x16	24	80
F16x32	12	40
TF16x32	12	40
24x24	24	80

Table 6-2 Font and Screen Sizes

The screen size settings depend on the host application. If the host screen size is larger than that of the terminal window, the terminal will truncate that screen display. Recommended sizes are either 12 rows x 40 columns or 24 rows x 80 columns.

You can modify the screen size settings by touching twice the **Screen Size** menu item and then touching the **Rows** or **Columns** menu item. A numeric keyboard will pop up. Enter an appropriate value. The value will show in the menu item.

Origin Scroll Toggle

It is possible that during a host application session the text cursor will end up off-screen. You could use the cursor arrow keys and/or tab keys to locate the cursor, but this could be time-consuming. The origin scroll toggle is an alternate way of keeping the cursor on-screen.

Whenever the **Origin Scroll** menu item is enabled, the cursor will automatically return to the origin (0,0) coordinates at the upper left corner of the window screen if the cursor is about to go off-screen.

POP-UP KEYBOARD SETTINGS

You can customize the pop-up action for the available keyboards in terms of four options:

Manual	Must touch the appropriate selection key.
Always	An appropriate keyboard will automatically pop up whenever there is a need for one.
If Active	An appropriate keyboard will pop up whenever an input field is made active
On Touch	The appropriate keyboard will pop up whenever you touch an input field.

You can access the pop-up options by selecting the **Pop-Up** menu item in the **Keyboard** menu.

BARCODE TAB TOGGLE

You can use the **BarCode Tab** menu item in the **Keyboard** menu to enable or disable the automatic tabbing of the text cursor to the next data entry field for bar code scanner application sessions.

Cursor Captive Toggle

You can use the **Cursor Captive** menu item in the **Keyboard** menu to enable or disable the automatic constraining of the text cursor to the current data entry field until a valid entry is made.

SERIAL I/O TOGGLE

You can use the **Serial I/O** menu item in the **Other** menu to enable or disable the Scanner Port, which is RS-232 compatible.

Touching the **Serial I/O** menu item will pop up a keyboard for entering **Yes** to enable or **No** to disable the port. The entry will show in the menu item.

Note that the Scanner Port is also enabled or disabled via the **BarCode** menu item in the Presentation Manager window's **Local** menu.

SESSION CLONING

The MT display is capable of presenting multiple sessions originating from multiple and disparate hosts. This feature lets mobile operators switch between applications on different hosts or switch between different sessions originating from the same host or any combination of both with minimal disruption to the user's work flow. Switching between sessions requires that the user simply touch the desired session window in order to activate that session.

The number of sessions supported per terminal is limited to eight. All eight session windows plus the Presentation Manager and Radio Manager windows can be displayed simultaneously on the touch screen by tiling the windows. However, it is recommended that any tiled display be limited to four windows or less; the visibility and usefulness of these windows degrades as their relative size diminishes.

Once the multi-session capability has been activated and configured, the terminal display can be frozen for the desired look by using the password protection utility in the Presentation Manager. Upon power up, users will see only the authorized pre-configured screens.

Cloning a Session Window

You can clone the current active session window by using that window's **Setup/Communication/Session** menu and then using the procedure:

1) Touch twice the **Session** menu item, which will display the **Copy** menu item.
2) Touch the **Copy** menu item which will display the **Title=** menu item.
3) Touch the **Title=** menu item which will pop up a keyboard.
4) Enter a distinctive title name for the new session window.
5) Reboot the MT using the ***<2nd><2nd>*<OFF><ON>** key sequence (see Chapter 2).

6) Tile the windows to view the new session window.

You can also rename the title of the new session window by using that window's **Setup/Communication/Session** menu and then selecting the **Session** menu item, which will display the **Rename** menu item. Touch the **Rename** menu item that will display the current title. Touch the title item, which will pop up a keyboard. Enter a new title. This title will appear in the title bar of the window.

Deleting a Cloned Session Window

You can delete an active cloned session window by using that window's **Setup/Communication/Session** menu and then using the procedure:

1) Touch twice the **Session** menu item, which will display the **Delete** menu item. The **Delete** item will not appear if the current window is the *original* session window.
2) Activate the **Delete** menu item.
3) Reboot the MT using the ***<2nd><2nd>*<OFF><ON>** key sequence (see Chapter 2).
4) Tile the windows to view the existing session windows. The *deleted* window will have been removed.

ABOUT THE CURRENT SESSION

You can obtain specific information about a particular session by activating the appropriate session window, popping up the menu bar using the <***Mode***> key, and touching twice the **About** menu bar item. Four bits of information is displayed; for example:

Ver=19970409	Version of the software installed in the MT unit, specified by the software release date in reverse (YYYYMMDD format).
Node=48	This value was entered via the **NodeAddress** menu item in the Radio Manager window's **Setup/Parameters** menu.
Sess=2	The session sequence number resulting from a session cloning operation
"48.ansij"	The node number and session name

ON-LINE DEMONSTRATION SESSION ("DEMO" SERVICE)

All WaveNet terminals, including the 5000, have a "built in" demonstration session. This session allows interactive communications to a 7000 Base Controller task which acts as a "host computer" - creating terminal screens and "dummy" data, as well as accepting data inputted into these various screens via keyboard, bar code scanner, or AEI scanner methods.

Configuration

Utilizing the "Demo" Service enables the On-Line Demonstration session. The following steps will configure the Demo service at the WaveNet Terminal:

1) Start a new session by using an existing session and copying a new session by selecting Setup\Communication\Session\Copy. Enter "Demo" as the title when prompted.
2) Locate the new "Demo" session by successive 2nd-TAB keystrokes, and the status line session name (if the status line is not visible, press 2nd twice in a row quickly).
3) Set the emulation to "WaveNet" in Setup\Emulation
4) Set the Host ID equal to the Host ID of the 7000 Base Controller you wish to communicate to via the radio data link.
5) Set the byte size to 8-bits by ensuring Setup\Communication\8 Bit equals "Yes".
6) Select the "Demo" service in Setup\Communication\Service
7) Set Page Caching to 16 in Setup\Display
8) Ensure the character set is set to either "ASCII", "Chinese" or "Korean". Note that the Demo will allow demonstration of Chinese or Korea character sets (keyed by login password), but only if the appropriate character sets have been installed in the terminal.
9) Select an appropriate font to use in Setup\Display\Font. The 6x12 Font is recommended, but other fonts, including the appropriate Chinese or Korean fonts can be selected.
10) Ensure the Screen size is set to Rows=12 and Columns=40.

After the following configuration is performed, the WaveNet Terminal must be "hard" reset.

Upon power up, the session will show a logon screen in the LCD display with the banner WaveNet, a Name field, a Password field, and a prompt of "Enter information to Logon".

If this does not occur, the most common errors to check are :

1) Is the 7000 Base Controller powered up?
2) Is the 7000 Base Controller and WaveNet Terminal both operating on the same RF Channel?
3) Is the WaveNet Terminal set to the proper Host ID?

Navigating the Demo Session

The Demo session provides a simple simulation of a inventory control software package that typically be residing on a host computer that the 7000 Base Controller may provide a connection to for the WaveNet Terminal and the associated Terminal Session.

The Demo session is designed using “Block Mode” ANSI for speed, security and ease of operator interaction. In general, the cursor keys can be used to navigate between fields on the various screens, but keyboard or bar code data input is allowed only in those fields that are designated as entry fields in the Block Mode screen construction. If data entry is attempted in non-entry fields, the terminal will display an on-screen error message which automatically clears after 1 second.

In general, the best method of screen navigation is with the TAB key. The TAB key will locate the cursor in only those fields which are designated as entry fields, in a rotating order, starting from the top of the screen, then going from left to right, until the bottom of the screen - where a wrap around is provided to the top of the screen.

The Logon Screen

This screen asks for a User Name and Password. The User Name serves no real purpose in the simulation, and can be ignored. The following entries for the Password field enable the associated options in the Demo Service :

- ?? Simply hitting “Enter” will bypass the User Name and Password fields and default the Demo Service to ASCII/English mode.
- ?? Entering “wavec” will enable the Demo Service option for Chinese/CNS Font mode. Note that this mode must be matched with appropriate selections in Setup/Display/Character Set and Setup/Display/Font for proper screen display.
- ?? Entering “wavek” will enable the Demo Service option for Korean/Hangul Font mode. Note that this mode must be matched with appropriate selections in Setup/Display/Character Set and Setup/Display/Font for proper screen display.

The Menu Screen

The Menu Screen has selections for :

- ?? Putaway (F1)
- ?? Pick (F2)
- ?? Query Location (F3)
- ?? RFID (F4)

With the 5000 Mobile Terminal, these areas can be simply touched to select and enter this menu choice.. For the 3000 and 3100 series terminals, the function keys F1-F4 must be used. F9 exits the Menu Screen and returns to the Logon Screen.

The Putaway Screen

The Putaway Screen shows a part number, a required quantity, and a location. These data items are generated from a "dummy" database in the 7000 Base Controller.

The Quantity and Location Fields can be edited, and the changed information sent back to the 7000 Base Controller. The editing can be performed by keyboard, or bar code scanner input.
F9 Exits the Putaway Screen and returns the Menu Screen, while any other function key will pass the data to 7000 Base Controller, and refresh the screen.

The Pick Screen

The Pick Screen shows a part number, a required quantity, and a location. These data items are generated from a "dummy" database in the 7000 Base Controller.

The Quantity and Location Fields can be edited, and the changed information sent back to the 7000 Base Controller. The editing can be performed by keyboard, or bar code scanner input.

F9 Exits the Putaway Screen and returns the Menu Screen, while any other function key will pass the data to 7000 Base Controller, and refresh the screen.

The Query Location Screen

The Query Location Screen shows a blank location, part number, and quantity. A location can be entered, and the 7000 Base Controller will return the associated part number and quantity from the "dummy" database. F9 Exits the Putaway Screen and returns the Menu Screen, while any other function key will pass the data to 7000 Base Controller, and refresh the screen.

The RFID Screen

The RFID Screen allows scanning of a AAR standard Railcar AEI tag. If a appropriate AEI tag is scanned, the following fields will automatically be updated with the AEI tag information, in the AAR specified format :

1) Owner
2) Number
3) Side
4) Axles
5) Length
6) Type

Note that this format may not accurately report all AAR standard data fields for tags other than Railcar tags (such as EOT, or Locomotive Dynamic Tags).

The Keyboard and Input fields can be used to capture additional keyboard or bar code data.

The ASCII field is used by the terminal to "dump" AEI tag data that does not conform to the AAR standard Railcar AEI tag data format. If the Terminal decodes a AEI tag that it cannot decode into some or all of the AEI fields present in this screen, it will simply place the data, in ASCII equivalent form, in the ASCII field.

F9 exits the RFID Screen, while any other function key will pass the data to 7000 Base Controller, and refresh the screen.

Note that the RFID Screen is normally used with the 3100 Portable AEI Terminal, which is outfitted with an integral AEI Scanner.

LOCAL CONSOLE SESSION

Whenever the barcode scanner support (internal or external) is configured in the Parameter Manager task (Local/Barcode), the external console port will no longer function as the internal channel is re-directed for use with barcode scanner.

To maintain the ability to interface to the Command Line Interpreter (CLI), a special local session is automatically created at the terminal with a default Security Level of 1. This session is the Console session, and is identified by the Status Bar label of "Consol". This session allows direct input to the CLI, and allows all functionality provided by an external console connection.

When barcode support is removed, the Console session is automatically deleted.

2.4 GHZ LOCAL TELNET SESSIONS

When used with 2.4 GHz (Aironet) radio systems the radio controller function of the 7000 Base Controller is replaced by Aironet Access Points (models **AP4500** or **AP4800**). However, the 7000 Base Controller can still be used in the network to provide the host session services detailed above (but with radio subsystems disabled).

Alternatively, a **Local Telnet Session** can be set in each 5000 Mobile Terminal to provide TELNET services directly to a ANSI or DEC compatible host – without using a 7000 Base Controller to provide additional host session interfacing and translation. With a Local Telnet session, TCP/IP services are enabled locally in the 3000 Portable Terminal, as opposed to being provided by a 7000 Base Controller in the wireless LAN.

Local Telnet Session capability is enabled by setting the **Host ID = 15** in the Setup / Communication sub-menu and rebooting the 3000. The Local session will then display a "Telnet Prompt":

Telnet>

A Telnet connection to a host computer can be established by simply typing then IP number of the host computer followed by ENTER:

Telnet> 192.168.0.1 <Enter>

From the external console port or the Local Console Session, the TCP/IP services can be accessed to set the IP number for the terminal, configure DNS services and set various TELNET configurations.

Setting the Terminal IP Number

Every node on an Ethernet TCP/IP network requires a unique **IP (Internet Protocol)** address. In the 2.4 GHz radio system which uses Local Telnet Sessions, the terminal is a node, and requires a unique IP address, formatted as y.x.x.x, where 1 <= y <= 239 and 0 <= x <= 254.

To assign an IP address, use the command:

> tcp ip addr en0 [y.x.x.x] *To set the IP address for the interface.*

For example, to assign the IP address 7.7.7.3 to the Ethernet interface (known as **en0**), use the command:

> tcp ip addr en0 7.7.7.3

The IP address assignment takes effect after the terminal is rebooted.

To store the IP address to the BC unit's configuration memory, use the command:

> tcp param save *To save the current TCP/IP parameter settings.*

Using DNS Services

DNS (Dynamic Name Service) allow mnemonic text descriptions to be used instead of IP addresses. For example, instead of typing in an IP number to connect to a ANSI/VT220 compatible computer system:

Telnet> 192.168.0.1 <Enter>

The following mnemonic text could be entered:

Telnet> server <Enter>

The DNS server functions are located in the "dns" task which can be accessed using the console task or external console connector. The following command shows the Help facilities available with the command:

```
>dns ?
dns>Valid commands are:
dns>assign or set: assign [host|port] name number
dns>get: get assignments
dns>clear or zero: clear [host|port|both] name tables
dns>debug or -d: set debug level
dns>def*ault: restore default tables
dns>res*tore or read: restore [host|port|both] name tables
dns>save or write: save [host|port|both] name tables
>
```

To set and save a mnemonic name for an IP number, use the following command:

```
>dns set host server 192.168.0.1
>dns save
dns>Host table saved (0)
dns>Port table saved (0)
```

To see the current DNS assignments:

```
>dns get host
dns>Host            IP Address
dns>server          192.168.0.1
>
```

Once a DNS name is configured for an IP address, the DNS name can be always substituted for the IP address.

? *DNS names are case-sensitive*

TELNET Auto-Connections

The **5000 Mobile Terminal** allows an automatic connection (**Auto-Connects**) to a host computer after the terminal is restarted (rebooted). The feature allows a **"captive"** connection that eliminates the operator having to remember and type an IP number or DNS name. As well, a "captive" connection provides greater security by only allowing access to the desired IP numbers or DNS names. Several Auto-Connects can be configured to provide for primary and back up host servers for the terminal.

The Auto-Connect feature is configured in the "tel" task that is accessible in the Console session or the external console connection. The following command lists the Help facilities available for the Auto-Connect configuration:

```
>tel acon
tel>on or en*able: Enable auto-connect
tel>off or dis*able: Disable auto-connect
tel>add or new: Create auto-connect
tel>del*ete or cl*ear: Delete auto-connect: #
tel>list or show: List auto-connects
tel>move: Move auto-connect: from to
tel>for: Define range: [Node1] [NodeN] [Name]
tel>host or IP: Set host address (0==all): IP#
tel>port or base: Set port<->node mapping (0==any): #
tel>max*user or use: Set maximum usage (0==all): #
```

The first step to using Auto-Connects is to turn on the service:

```
>tel acon on
tel>Auto-connects enabled
```

Next, configure and save an Auto-Connect:

```
>tel acon add host 192.168.0.1
```

```
tel>Auto-connect: IP: 192.168.0.1 Nodes: Any
>tel param save
tel>Telnet parameters saved
```

To see the current list of Auto-Connects, use the following command:

```
>tel acon list
tel>Auto-connects are enabled
tel>1) Auto-connect: IP: 192.168.0.1 Nodes: Any
```

Auto-Connects can be added and deleted as the following example illustrates:

```
>tel acon add host 192.168.0.99
tel>Auto-connect: IP: 192.168.0.99 Nodes: Any
>tel acon list
tel>Auto-connects are enabled
tel>1) Auto-connect: IP: 192.168.0.1 Nodes: Any
tel>2) Auto-connect: IP: 192.168.0.99 Nodes: Any
>tel acon del 1
tel>Deleting 1)Auto-connect: IP: 192.168.0.1 Nodes: Any
>tel acon list
tel>Auto-connects are enabled
tel>1) Auto-connect: IP: 192.168.0.99 Nodes: Any
>tel param save
tel>Telnet parameters saved
```

? *Note that when deleting Auto-Connects the list is renumbered with remaining Auto-Connects numbered from 1.*

? *Remember to save your Auto-Connect list after you make changes!*

Several other commands are related to the Auto-Connect facility. The first is **Local Prompt** control:

```
>tel loc
tel>Local prompts are currently enabled
>tel loc off
tel>Local prompts are currently disabled
>tel loc on
tel>Local prompts are currently enabled
```

If Local Prompts are turned off, the "**Telnet**>" prompt is never visible on the terminal display, even if no successful Auto-Connect was made. This provides extra security by not providing any local Telnet capability to the operator at all.

? *With Local Prompts disabled, the terminal will continue to cycle through the Auto-Connect list until a successful Auto-Connect is made.*

? *The terminal will not be allowed to access other host computers if the host computers in the Auto-Connect list are not available. Local Prompts must be re-enabled to access other host computers that are not contained in the Auto-Connect list.*

? *Remember to save your Local Prompt configuration after you make changes!*

The second is the **Host Time Out** configuration. This controls how long the terminal will try when attempting to establish an Auto-Connect before moving to the next Auto-Connect in the Auto-Connect list. The following example shows the Host Time Out configuration:

```
>tel time
tel>No Host response timeout
>tel time 10
tel>Host response timeout: 10 seconds
>tel time 0
tel>No Host response timeout
```

? *Remember to save your Host Time Out configuration after you make changes!*

TELNET Auto-Login Services

After an Auto-Connection is made to a host computer, usually the host computer requires the operator to supply a username and password. This security step can be bypassed at the host computer with an appropriate login script, or the 5000 Mobile Terminal can be configured to automatically supply the desired user name and password using the Auto-Login facility. Help facilities for Auto-Login configuration are available with the following command:

```
>tel alog
tel>on or en*able: Enable auto-logging
tel>off or dis*able: Disable auto-logging
tel>add or new: Create auto-login
tel>del*ete or cl*ear: Delete auto-login: #
tel>list or show: List auto-logins
tel>move: Move auto-login: from to
tel>for: Define range: [Node1] [NodeN] [Name]
tel>host or IP: Set host address (0==all): IP#
tel>max*user or use: Set maximum usage (0==all): #
tel>name or user: Define username: prompt reply
tel>pass*word: Define password: prompt reply
tel>pr*ompt: Define host prompt: prompt [timer (ticks)]
```

To use Auto-Login, the first step is to enable Auto-Logins:

```
>tel alog on
tel>Auto-logins enabled
```

Second, define the host IP number that the Auto-Login will be assigned to:

```
>tel alog add host 192.168.0.99
tel>Auto-login: IP: 192.168.0.99 Nodes: Any
tel>User: Pass:
```

Next, set the Username prompt text used by the host computer and the Username to be supplied:

```
>tel alog name User: Wave
tel>Auto-login: IP: 192.168.0.99 Nodes: Any
```

```
tel>User:[User:]=<Wave> Pass:
>tel alog pass password: Net
tel>Auto-login: IP: 192.168.0.99 Nodes: Any
tel>User:[User:]=<Wave> Pass:[password:]=<Net>
```

As with Auto-Connects, several host IP numbers with their respective Username/Password prompts and responses can be configured, as well as deleted:

```
>tel alog add host 192.168.0.100
tel>Auto-login: IP: 192.168.0.100 Nodes: Any
tel>User: Pass:
>tel alog name username: 3000
tel>Auto-login: IP: 192.168.0.100 Nodes: Any
tel>User:[username:]=<3000> Pass:
>tel alog pass passwrd: PT
tel>Auto-login: IP: 192.168.0.100 Nodes: Any
tel>User:[username:]=<3000> Pass:[passwrd:]=<PT>
>
>tel alog list
tel>Auto-logins are enabled
tel>1) Auto-login: IP: 192.168.0.99 Nodes: Any
tel>User:[User:]=<Wave> Pass:[password:]=<Net>
tel>2) Auto-login: IP: 192.168.0.100 Nodes: Any
tel>User:[username:]=<3000> Pass:[passwrd:]=<PT>
>
>tel alog del 1
tel>Deleting 1)Auto-login: IP: 192.168.0.99 Nodes: Any
tel>User:[User:]=<Wave> Pass:[password:]=<Net>
>
>tel alog list
tel>Auto-logins are enabled
tel>1) Auto-login: IP: 192.168.0.100 Nodes: Any
tel>User:[username:]=<3000> Pass:[passwrd:]=<PT>
>
>tel param save
tel>Telnet parameters saved
```

? *Note that when deleting Auto-Logins the list is renumbered with remaining Auto-Connects numbered from 1.*
? *Remember to save your Auto-Login list after you make changes!*

Terminal TELNET Server

In order to facilitate monitoring and re-configuration of the terminal while operating in the 2.4 GHz (Aironet) radio system, a **TELNET server** can be enabled in the terminal.

To configure this TELNET server, enter the following commands at the Console Session, or using the external Console connector:

```
>tel listen for TCON
tel>Listen port: IP: Any At: 23 Nodes: Any Name: <TCON>
>tel param save
```

tel>Telnet parameters saved

? *Remember to save your Telnet server configuration!*

With this Telnet server configured, the terminal will support a direct TELNET connection from a host computer (providing the host computer is configured with an appropriate route to the terminal IP) using a TELNET application.

? *To exit a TELNET session to a 5000 Mobile Terminal, simply type "exit".*

? *To force the 5000 Mobile Terminal to reboot, type "reboot" then exit the TELNET session.*

Chapter 7 : Advanced Topics

This chapter explains how to utilize current advanced procedures for maintaining or upgrading the 5000 Mobile Terminal (MT) unit.

The advanced topics included in this chapter are:

- ?? Host Color/Touch Options
- ?? Designing a custom keyboard
- ?? Using a PC Keyboard
- ?? Using the Touch Console Window
- ?? Connecting a Console Device
- ?? Downloading Images to Flash Memory

HOST COLOR/TOUCH OPTIONS

Color/touch capability is available for any MT units in a WRDN. This capability can also be made available at the host application level. Terminal operators can use the color/touch functionality and have those functions recognized by the host computer application.

When the terminal operator touches within a Session window, information is sent back to the host application which defines the exact location of the touch. Normally the host application does not act on this information because it is not aware of what this information is. With modifications to the host application, this information can be recognized and acted upon. For example, a menu text list of choices could be presented in a Session window. The operator could touch a particular item that would cause a cursor location to be sent back to the host application. The host would recognize the cursor location as being associated with the menu choice and act on this information with an appropriate reply to the user.

Color or special display attributes can be implemented by having the host application modify the data stream going to the terminal with the appropriate information. The terminal is capable of assigning color or special field attributes to the different fields sent from the host. For example, read only text fields can be assigned a specific color, whereas the data input fields can be assigned a reverse color.

The extent of host application modification per Session window will depend upon the specific requirements regarding the extent of color/touch implementation.

DESIGNING A CUSTOM KEYBOARD

One of the unique features of the MT is the ability to design and add custom keyboards. These can be designed at the commissioning stage and copied (cloned) to all MT's on the network. These keyboards

may be assigned 'hot' keys for instant retrieval by the operator at any time. Keyboard size, labels, and character codes may all be assigned at the design stage.

The 5000 Mobile Terminal will accept a maximum of 4 custom keyboards.

Keyboard Customization

From the Program Manager window, use the <**Mode>** key to activate the menu display. Select **KB Design** from the **Keyboard** menu item.

The Keyboard Menu Selection Bar will now appear below the P.M. title bar. You may select the keyboard menu functions by touching the area on the menu selection bar, or pressing the appropriate command key associated with the function. The Keyboard Menu Selection Bar will also give you instructions on how to operate certain functions.

For Example:
If you would like to pull up an existing keyboard, press the **ExistingKb** area on the Keyboard Menu Selection Bar or press the <**F4**> Key.

The first step to designing a custom keyboard is to determine the size of the keyboard. Custom keyboards on the 5000 Mobile Terminal initially come in 3 different sizes.

These sizes are:

- ?? 5 Rows 7 Keys
- ?? 5 Rows 9 Keys
- ?? 5 Rows 11 Keys

You may use these initial keyboard sizes as the foundation of your custom keyboard, and modify as you need.

Once you have selected your keyboard size, you are now ready to:

- ?? Change the keyboard/key size and shape
- ?? Assign key features
- ?? Assign key fonts
- ?? Assign key text
- ?? Assign key data

Changing the Keyboard/Key Size and Shape

To change the keyboard/key size and shape, touch the **Kb/Key Size/Shape** area on the main Keyboard Menu Selection Bar (or press <**F1>**).

This will bring up a new list of functions on the Keyboard Menu Selection Bar (see Table 7-1.)

Key	Function
F1	RowOffset
F2	KeyHide
F3	CombineKeys
F4	BreakKey
F5	Break/ShowAllKeys
Bk Sp	Done

Table 7-1 KeyBoard/Key Size and Shape Key List

RowOffset

You can use the RowOffset command to redesign the shape of your custom keyboard.

To move a row of keys left or right, select the row you wish to move, and press the **MoveRight/MoveLeft** areas on the selection menu (or the <**Tab>/<BTab>** keys.)

KeyHide, Break/ShowAllKeys

To hide keys on the keyboard that you do not wish to use chose the **KeyHide** command. Select the key that you wish to delete, and the key will disappear.

To unhide all the keys, use the **Break/ShowAllKeys** command.

> ? *You cannot unhide one single key. If you use the Break/ShowAllKeys command, all deleted keys will reappear.*

Combine Keys

You may merge single keys into larger keys using the **CombineKeys** command.

For example:
On a standard 5x7 custom keyboard, to combine key ‘B’ and key ‘Q’:

1) Select **CombineKeys** from the menu.
2) Select key ‘B’ from the keyboard.
3) Select key ‘Q’ from the keyboard.

Both keys will be merged into one large key ‘B’.

> ? *When merging keys you must always select the top key first then bottom key, or the left key then right key, in that order.*

Assigning Key Features

You may assign different features to any of the keys on your custom keyboard, using the **Key Features** command.

The following table is a list of the basic keys features:

Key	Feature
F1	Caps Key
F2	Shift Key
F3	Convert Caps
F3	Key Border

Table 7-2 Key Feature List

Caps Key

You may assign any key on your custom keyboard to be the Caps Key. The status indicator beside the **Caps Key** feature on the Keyboard Menu Status Bar denotes the status of the key. A '-' indicates that Caps has not been assigned, and '+' indicates that Caps has been already assigned to that particular key.

Shift Key

Just like the Caps Key feature, you can use the **Shift Key** feature to assign any key on your keyboard to be the Shift Key. The status indicator beside the Shift Key feature on the Keyboard Menu Status Bar denotes the status of the key. A '-' indicates that Shift has not been assigned, and '+' indicates that Shift has been already assigned to that particular key.

Convert Caps

You may assign the **Convert Caps** feature to any key on your keyboard. If Convert Caps is not turned on (status indicator = '-'), that key will not be capitalized when the Caps Key is pressed.

? *By default, the Convert Caps feature is turned on for every key.*

Key Border

The Key Border feature lets you assign borders to keys on your custom keyboard. To assign a border to your key, select the **Key Border** feature and then touch the key that you wish to assign.

? *By default, the Key Border feature is turned on for every key.*

Key Fonts

The 5000 Mobile Terminal has the capability to display custom fonts on its keyboard keys. These fonts can be ASCII single byte character sets, or Chinese/Korean double byte character sets.

See *Character Sets* and *Fonts* in Chapter 6 for more information.

To add a new font to the 5000 Mobile Terminal font list, see *Downloading Images to Flash Memory* in Chapter 7.

Selecting a New Font

To select a new font, touch the **Key Font** area on the main Keyboard Menu Selection Bar. A list of available fonts stored on the Mobile Terminal will now appear on the selection bar. Select the font you wish to use by touching the appropriate area. Then select the key that you wish this font to be applied to. Follow the on screen instructions presented on the bar.

See *Entering Key Text* for information on how actual characters with different fonts are displayed.

Entering Key Text

The 5000 Mobile Terminal allows you to enter custom text on your keyboard keys. This is done by selecting the **Key Text** area on the main Keyboard Menu Selection Bar. Once you have selected this command, select the key that you wish to modify. A standard ASCII keyboard will pop-up, which will allow you to enter custom key text.

To select other fonts or different character sets like Chinese or Korean, touch the <**Ins>** key. A list of available characters and symbols will now appear. Select the characters or symbols from the list as you wish.

See *Selecting a New font* for information on how you can change the character/font set for a particular key.

Entering Key Data

To assign a command to a custom key, select the **Key Data** area on the main Keyboard Menu Selection Bar. Follow the on screen instructions. Select the key that you wish the command to be assigned to. Enter the command using the pop-up keyboard.

If you wish to assign special commands or use different characters, press the <**Ins>** key or the <**Clear>** key.

Saving Custom Keyboards

Once you are done designing your custom keyboard, you must save it to use it in the future.

After you are finished designing your keyboard, the **Save** command will appear on the menu bar. The Mobile Terminal will allow you to save a maximum of 4 custom keyboards. Use the <**Tab**>/<**BTab**> key to scroll through the list of keyboards until you find an empty spot. An empty spot is denoted by "-----". Once you have found an empty spot, touch the **Save Current** area on the menu bar. A standard ASCII keyboard will pop-up, which you may use to enter the new keyboard name. Once you have entered the name and pressed <**Enter>**, your keyboard will be saved.

Deleting a Custom Keyboard

From the Program Manager window use the <**Mode>** key to activate the menu display. Select **CKB Review** from the **Keyboard** menu item. Use the <**Tab**>/<**BTab**> key to scroll through all the existing keyboards. Find the keyboard that you wish to delete, and press the <**Del>** key. The keyboard will now be deleted.

Assigning Hot Keys to Keyboards

You can assign hot keys to different keyboards so that they can be accessed easily. To do this, select the **KB Assign** option from the **KeyBoard** menu. Make a selection from the list and touch <**Enter**>.

Touch <**F2**> and then select the hot key sequence (e.g. <**2nd**><**F3**>). The hot key selection will appear beneath the keyboard name on the screen. If it does not appear, it is because your selection was not valid or it is in use by another keyboard or function.

Touch <**Enter**> to accept your choice. Use the <**Mode**> key to exit the menu structure. Confirm the hot key assignment by using it.

Reviewing Keyboards

If you wish to view the existing custom keyboards, select **KB Review** from the **KeyBoard** menu. You may now scroll through the keyboard list by using the <**Tab**>/<**BTab**> keys. Keyboards may be discarded by touching the <**Del**> key.

USING A PC KEYBOARD

An external PC compatible keyboard may be connected to the MT unit via the Keyboard Port. This keyboard can be used as an alternative input device to the touch screen input options. A connected external keyboard will not affect any touch screen functions. The external keyboard could be useful in the event that the touch interface is not operating properly.

? *The <**Alt**> key on a connected external keyboard is equivalent to the touch screen's **<2nd>** key.*

? *When using an external keyboard, ensure that a ferrite block (Steward 28B2025-0A0, or equivalent) is installed on the keyboard shielded cable. This requirement complies with the FCC Part 15, Class A - Digital Devices regulation.*

USING THE TOUCH CONSOLE WINDOW

The MT unit provides a touch-sensitive Console window that allows you to access the Command Line Interface to the resident software modules (tasks). The Command Line Interface facilitates the entering of task-based commands. The Console window facilitates the viewing of any command responses.

> ? *The touch console window cannot be used to download any task images via the **load** task commands. To do so, see the next section.*

Usually, the touch console window is used to monitor the configuration and operations of the MT unit for maintenance purposes.

Normally, the Console window is not displayed, especially when the Scanner Port is enabled.

To display the touch console window, use the following procedure:

1) Activate the Presentation Manager (P.M.) window menu bar via the <***Mode***> key.
2) Activate the **BarCode** menu item (touch it twice) in the **Local** menu.
3) Activate the **WritePrms** menu item (touch it twice) in the **Local** menu.
4) Touch the <**ENTER**> key.
5) Restart the MT unit via the ***<2nd><2nd>***<OFF>< ON> sequence (see Chapter 2).
6) Activate the **Tile** or **Casc** menu item in the Global menu.
7) Touch the Console window to activate it and then touch the **Maximize** button to display the full window. The Command Line Interface prompt (>) will be visible.
8) Select an alphabetical pop-up keyboard using its hot key (see section on Pop-Up Keyboards in Chapter 3).
9) You may now enter a task command in the text entry field of the pop-up keyboard. Enter the command syntax string and then touch the <**ENTER**> key.
10) Remove the pop-up keyboard by touching anywhere within the windows area outside of the keyboard.
11) You can now view the task command response. Touch the <**ENTER**> key repeatedly to scroll the window contents.

To remove the touch console window, use the following procedure:

1) Activate the Presentation Manager (P.M.) window menu bar via the <***Mode***> key.
2) De-activate the **BarCode** menu item (touch it once) in the **Local** menu.
3) Activate the **WritePrms** menu item (touch it twice) in the **Local** menu.
4) Touch the <**ENTER**> key.
5) Restart the MT unit via the ***<2nd><2nd>***<**OFF**>< **ON**> sequence (see Chapter 2).

The touch console window will now be removed.

CONNECTING A CONSOLE DEVICE

A console device, usually a personal computer (PC), can be connected to the MT unit's Console Port in order to access the Command Line Interface to the resident software modules (tasks). The Command Line Interface facilitates the entering of task-based commands. The Console screen facilitates the viewing of any command responses.

? *You can not use a Console device while the touch Console window is enabled. This is due to the Console Port being disabled whenever the BarCode menu item is activated, as it is for the Console window display (see previous section).*

WaveNet's WaveTERM console utility emulator is recommended to facilitate Console operations. The WaveTERM software, and the task object code files for task downloads, are available from *WaveNet* for *WaveNet* certified technical support personnel. This software requires a PC with Microsoft Windows 3.1 or Windows 95 installed.

A three-wire null modem cable (RX Data, TX Data, GND) is required to connect the PC's communications port directly to the MT unit's Console Port.

The following figure shows the connectivity between the MT unit and a laptop PC operating as a Console device

Figure 7-1 The Console Setup

The following steps will allow you to display the Command Line Interface prompt (>) required for entering console commands:

1) Double click the WaveTERM icon to display the WaveTERM terminal window. If DC power is not turned on at the MT unit, there will be no prompt (>) showing at this step. If DC power is turned on at the MT unit, there will only be a prompt (>) showing at this step.
2) Turn on, if not already on, the DC power to the MT unit, and then press the console <Enter> key. The prompt (>) will appear.
3) You may now enter a console command at the prompt (>).

DOWNLOADING IMAGES TO FLASH MEMORY

Flash memory tasks can be updated by downloading new image files. These files can be downloaded by using **load** task commands.

? *Using **load** task commands requires access to the Command Line Interface via a Console device (see previous section), not via the touch Console window. The Console device has access to the new task images, whereas the Console window does not.*

An image file can be downloaded to one of four possible places in Flash memory:

?? At the start sector of an erased Flash memory.
?? At the next available space starting from low address.
?? At the highest available sector that can hold the image.
?? At a specific address.

The Flash memory is protected against being modified while it is in use. If you attempt to download an image file to the Flash memory while the Flash memory is in use, the **load** task command will be rejected and an alert, "Flash in use!" will be displayed.

To ensure that the Flash memory is not in use, use the command:

>load flash now	*To restart the MT unit.*

Loading the Complete Flash Image

In order to download a complete Flash image (set of tasks), there must be enough free low Flash memory available. High Flash memory is typically reserved for special tasks such as those involving character sets.

To monitor and erase the current low Flash memory, use the commands:

>load flash now	*To restart the MT unit.*
>load fp	*To obtain the first sector address.*
>FLSH e[first sector address]	*To erase contiguous memory beginning at [first sector address].*

? *Do not use FLSH E command (with upper case E). This command will erase the high Flash memory in addition to the low Flash memory.*

Use the **load fp** command again to confirm that enough free memory is available.

To download and activate the complete Flash image, use the commands:

>load lf [filename]	*To load Flash image with [filename].*
>load fir	*To install and run the Flash image in RAM.*

Loading a Task Image at Next Available Space

This command is primarily used to add a new task . This may be required to add new features to the system or to provide a custom option.

The **load** task installs images on sector boundaries. When a new image is downloaded, the first taskname in the image is checked against the first taskname of all images currently in the Flash memory. If the two names match, then the old image is overwritten. Otherwise, the new image is written starting at the first available new sector boundary.

To load a task image at the next available space starting from low address, use the command:

>load flash now	*To restart the MT unit.*
>load lf [filename]	*To load task image with [filename].*

Installing a Task Image into High Memory

High memory is an area in Flash memory which is unaffected by a new (complete) Flash image install procedure. It is generally reserved for character sets or custom tasks.

To install a task image at the highest available sector that can hold the image, use the commands:

>load flash now	*To restart the MT unit.*
>load lfh [filename]	*To load task image with [filename] into high memory.*

Installing a Task Image at Specific Address

To install a task image at a specific start address, use the commands:

>load flash now	*To restart the MT unit.*
>load lf@[address] [filename]	*To load task image with [filename] at [address].*

If the [address] location already contains a task image, the task image with [filename] will be installed at the subsequent available sector.

Chapter 8 : Installation Reference

5000 EXTERNAL DIMENSIONS

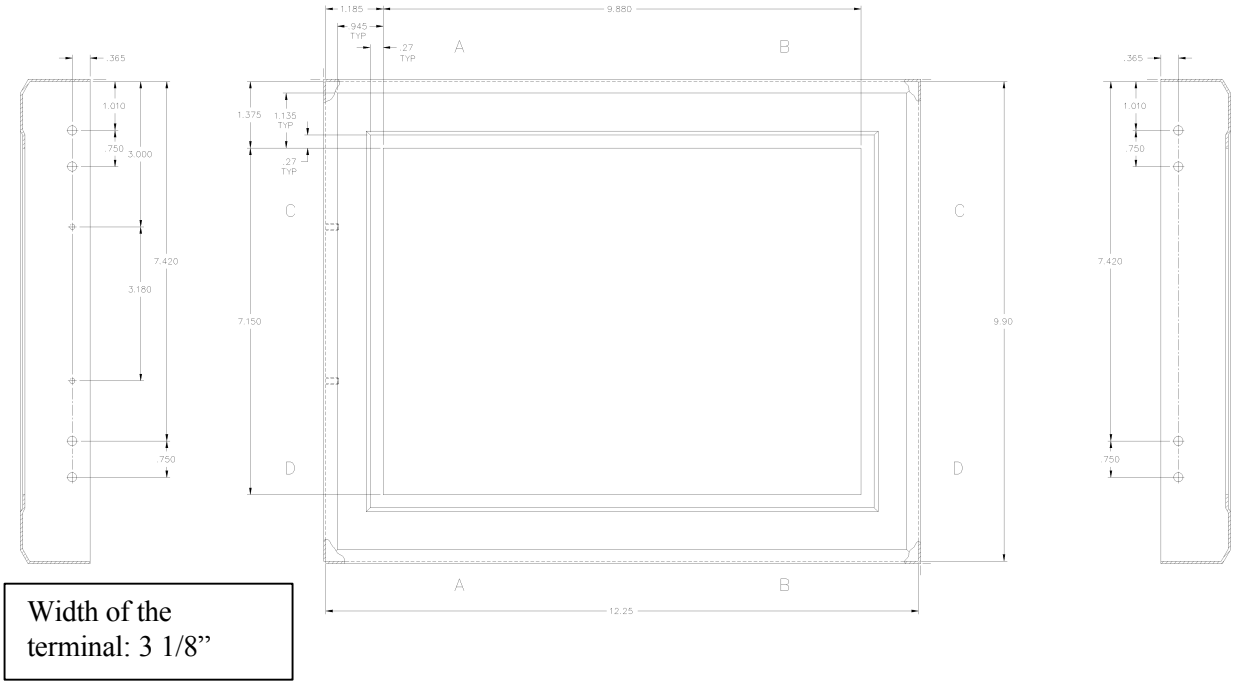

Figure B-1 Front view of the 5000 Mobile Terminal and dimensions

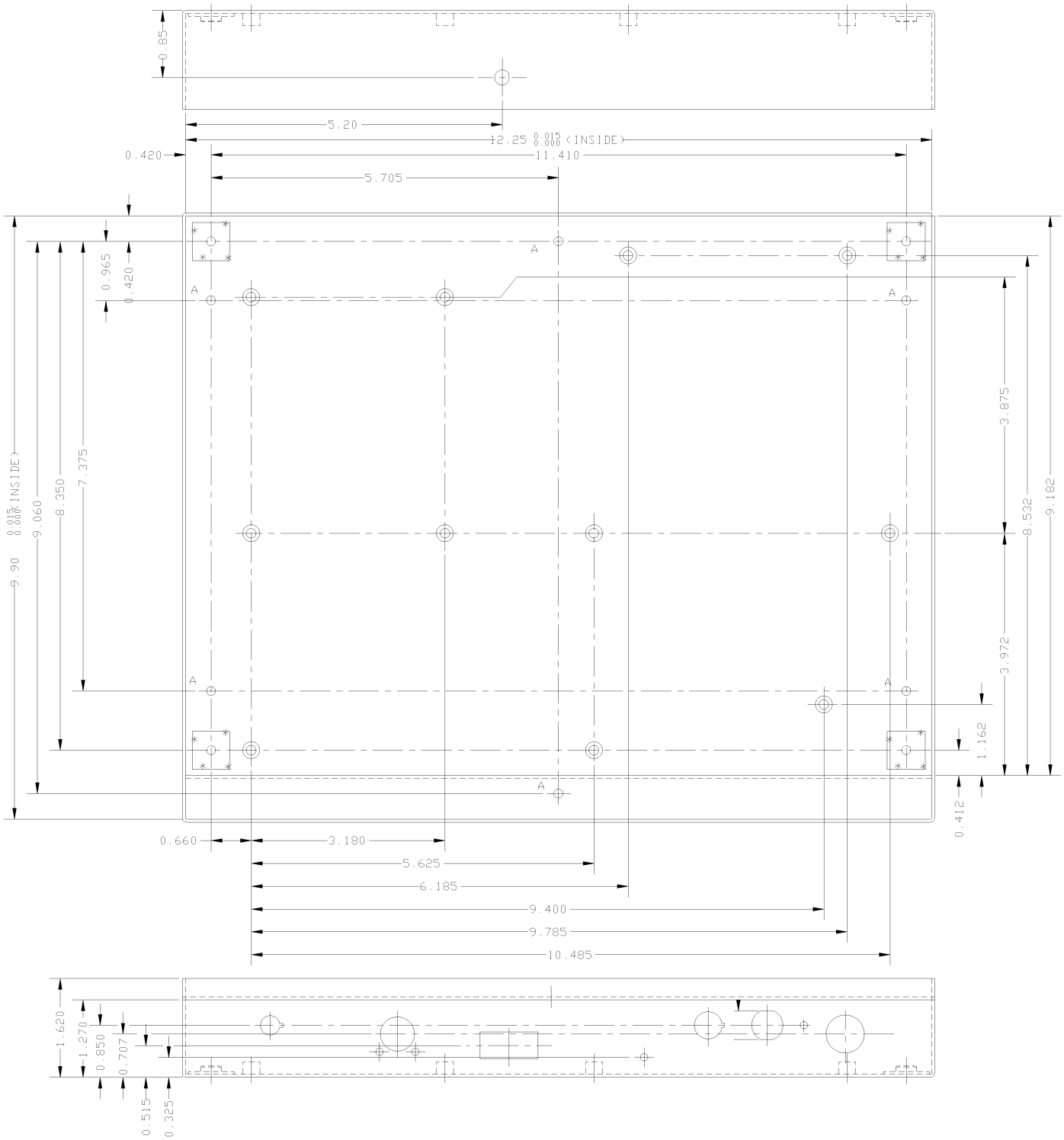

Figure B-2 Rear view of the 5000 Mobile Terminal and dimensions

UNIVERSAL TRUCK MOUNTING BRACKET DIMENSIONS

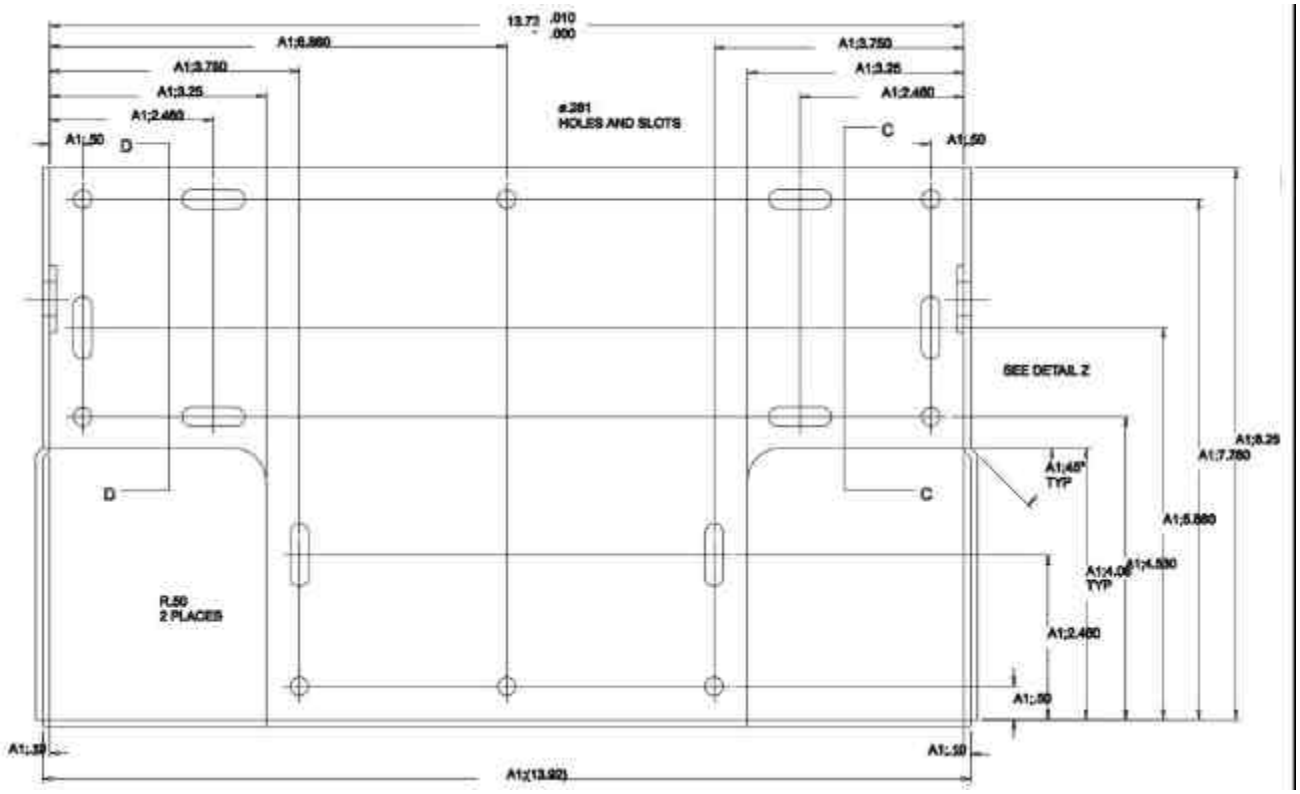

Figure B-3 Rear View of the bracket

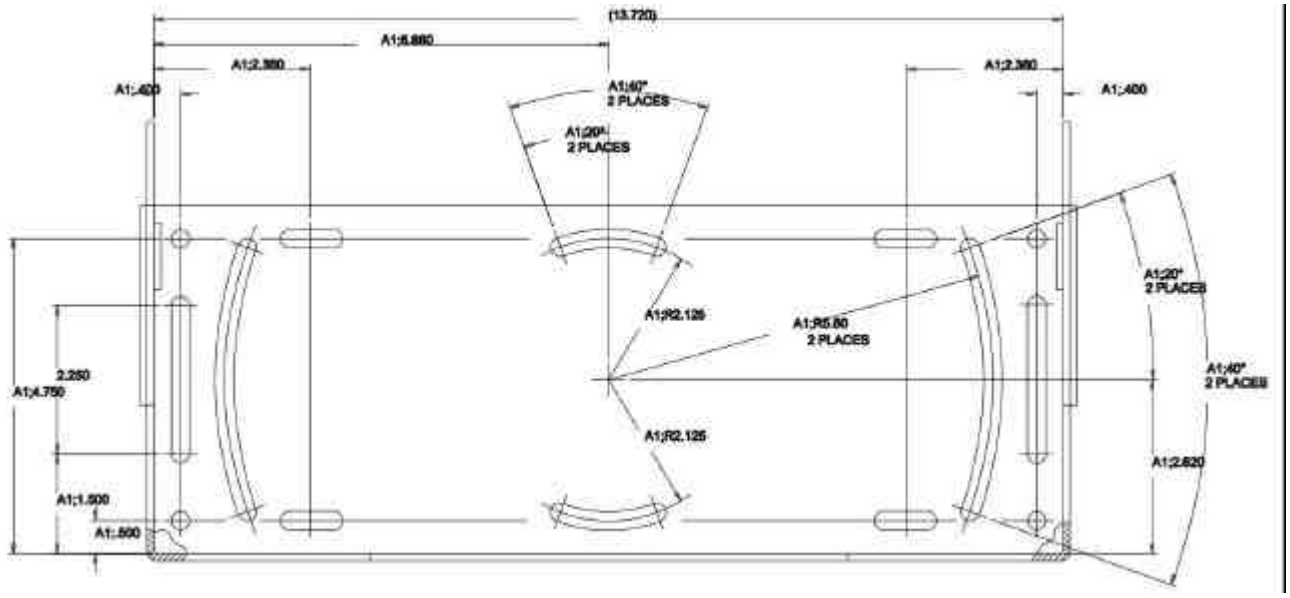

Figure B-4 Bottom view of the bracket

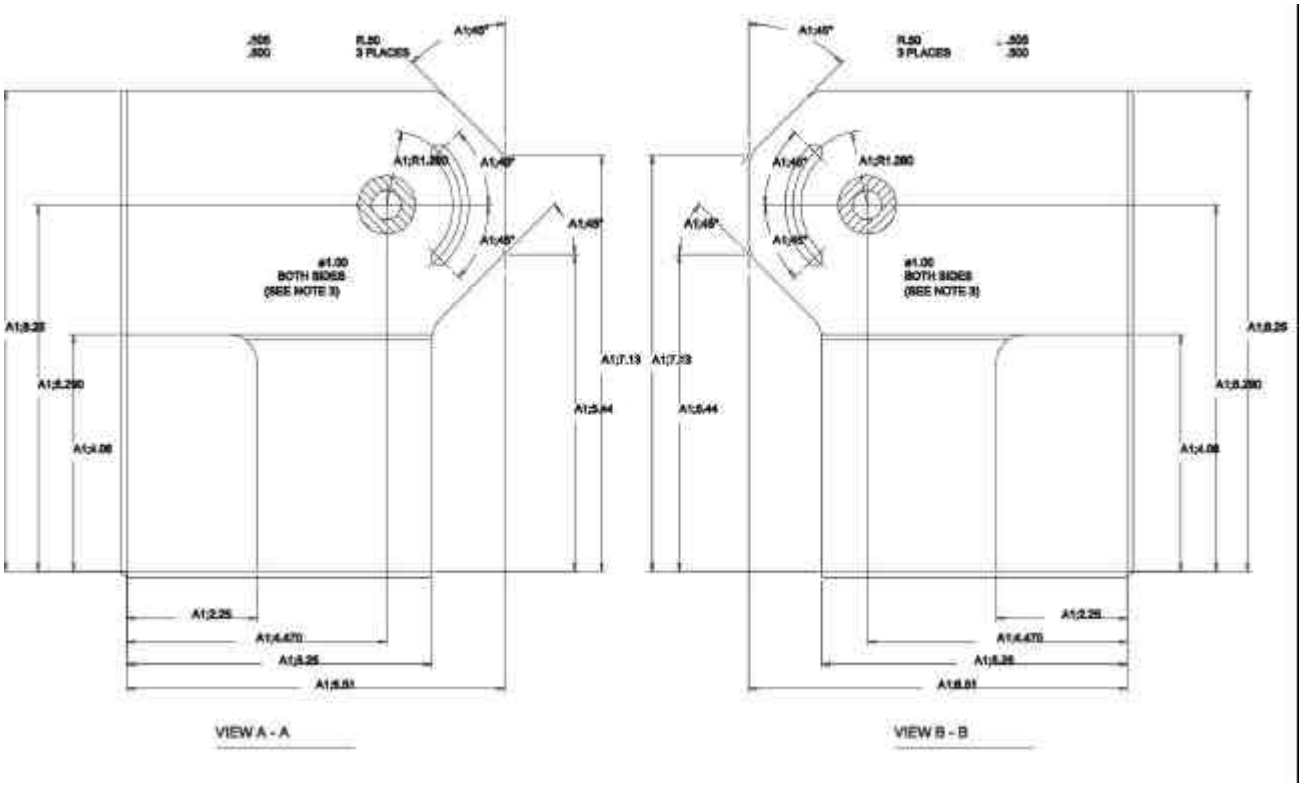

Figure B-5 Sided view of the bracket

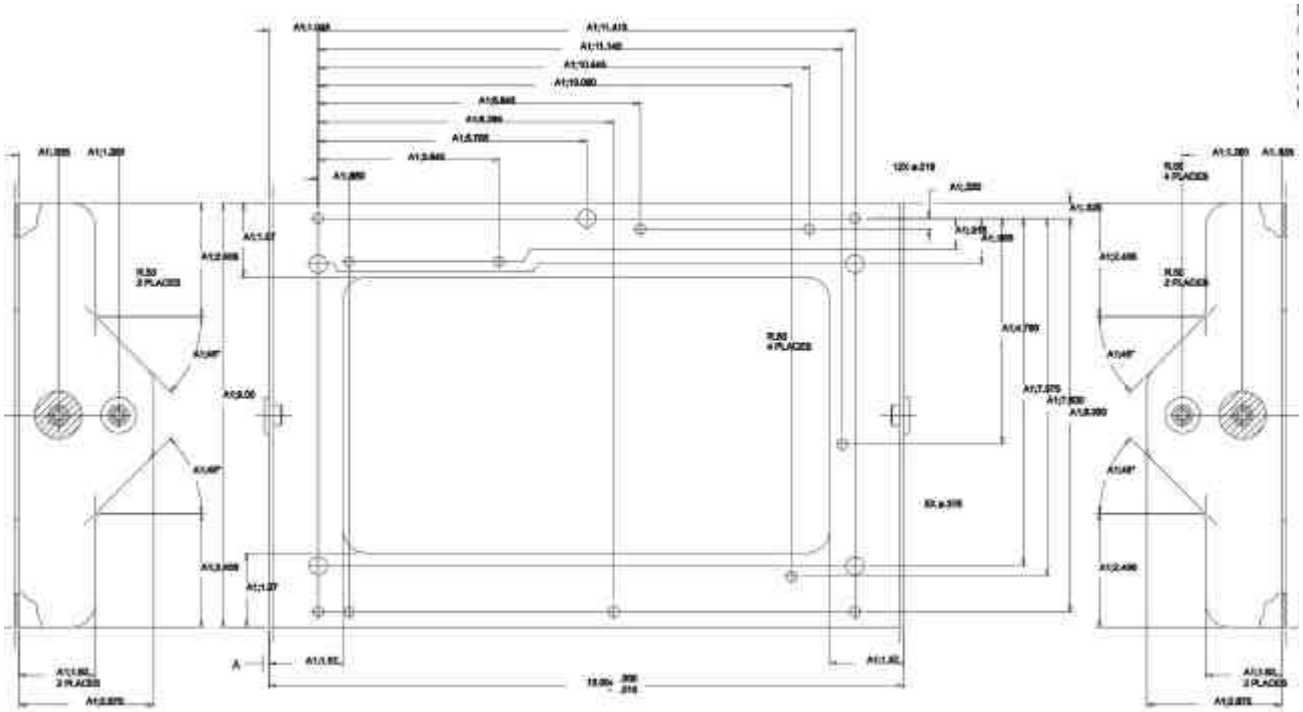

Figure B-6 Inner bracket dimensions

Note: All measurements are in inches.

MODEL 5000 MOBILE TERMINAL JUMPER CONFIGURATIONS

SRAM (J2)

J2 Configures SRAM U5 and U6 for 1 Mbyte or 4 Mbyte SRAM

1 - 2 connects HI signal to pin U5-30 and U6-30 (1 Mbyte RAM)
2 - 3 connects A18 to U5-30 and U6-30 (4 Mbyte RAM)
Default 1 - 2

Watch Dog Timer (J3)

J3 Enables watchdog timer

Open - Watchdog timer disabled
Closed - Watchdog timer enabled
Default - Closed

Remote Heater Panel (J4/J11)

J4 Header for remote heater panel **(closed if option installed)**
J11 Header for remote temperature sensor **(closed if option installed)**

SRAM Test (J21)

J21 Enables chip select for SRAM unconditionally. For test purposes only

Open - Normal operation
Closed - Test mode
Default - Open

EEPROM (J23)

J23 Configures U4 for 1 Mbyte or 4 Mbyte EPROM

1 - 2 connects HI signal to pin U4-43 (1 Mbyte EPROM)

2 - 3 connects A18 to pin U4-43 (4 Mbyte EPROM)
Default - 1 – 2

SCANNER CONNECTOR

The bar-code interface (scanner connector) used on all WaveNet terminals is as follows:

Terminal Connector : HIROSE HR10A-10R-10S
Scanner Connector : HIROSE HR10A-10P-10P

SCANNER CONNECTOR SIGNALS

The following signals are used in the scanner interface (signals marked with * are not software supported):

WaveNet Pin No.	Signal Description	Level	Direction
1	Undecoded Data (*)	TTL	Input
2	+5V		Power
3	Scanner Trigger (*)	TTL	Input
4	0V		Power
5	Start of Scan (*)	TTL	Input
6	N/C		
7	Scanner Enable (*)	TTL	Output
8	Serial Receive Data	RS-232	Input
9	Scanner Ack (*)	TTL	Output
10	Serial Transmit Data	RS-232	Output

SYMBOL DECODING SCANNER INTERFACE (TYPICAL)

WaveNet Pin No.	Signal Description	Symbol Signal Name	Symbol Wire Color
1	N/C		
2	+5V	+5V	Red
3	N/C		
4	0V	GND	Black
5	N/C		
6	N/C		
7	N/C		
8	Serial Receive Data	TXD	Yellow
9	N/C		
10	N/C		

In this connection, the Brown (DTR) wire should be not contacted, and the Purple (CTS) wire should be looped back to the Blue (CTS) wire.

CONSOLE/SERIAL I/O CONNECTOR

The console connector used to interface to any WaveNet terminal console port is as follows:

Plug : FUJITSU FCN-230C020-A/E
Shield : FUJITSU FCN-237R020-G/G

The standard pin-out of the console/serial I/O connector is as follows:

Pin #	Name	Function
1	+12V	12V Power
2	Spkr Pwr	External Speaker/Microphone Power
3	+5V	5V Power
4	+5V	5V Power
5	GND	Ground
6	TXD1	Transmit Data 1 (External)
7	RTS1	Request to Send 1 (External)
8	RXD1	Receive Data 1 (External)
9	CTS1	Clear To Send 1 (External)
10	DCD1	Data Carrier Detect 1 (External)
11	TCLK1	Transmit Clock 1 (External)
12	RCLK1	Receive Clock 1 (External)
13	GND	Ground
14	SINAD	Radio SINAD Out (Radio Test Only)
15	CD	Carrier Detect Out (Radio Test Only)
16	RSSI	Receive Signal Strength Indicator (Radio Test Only)
17	TXD2	Transmit Data 2 (Console)
18	RXD2	Receive Data 2 (Console)
19	Mic (In)	External Microphone Audio In
20	Spkr (Out)	External Speaker Audio Out

TYPICAL EXTERNAL CONSOLE & DEVICE CABLE CONNECTIONS

The following shows a simple, typical cable connection for an external RS-232 device (assuming a DB9F Connector):

Pin #	Name	Function	External Device Pin #	Function
5	GND	Ground	5	Ground
6	TXD1	Transmit Data 1 (External)	2	RXD

Pin #	Name	Function	External Device Pin #	Function
8	RXD1	Receive Data 1 (External)	3	TXD

The following shows a simple, typical cable connection for a Console Cable (assuming a DB9F Connector):

Pin #	Name	Function	Console Cable Pin #	Function
13	GND	Ground	5	Ground
17	TXD2	Transmit Data 2 (Console)	2	RXD
18	RXD2	Receive Data 2 (Console)	3	TXD

POWER CONNECTOR AND EXTENSION CABLE

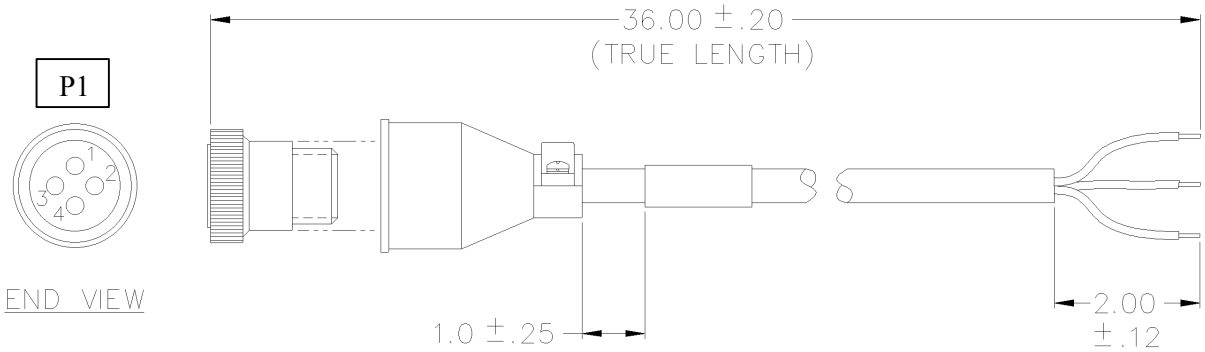

Figure B-7 Power Connector and Cable

P1	Color	Signal
1	RED	+12V
2	WHITE	+24 TO +48V
3	BLACK	GROUND
4	WIRE/DRAIN	DRAIN

SPEAKER/MIC PORT

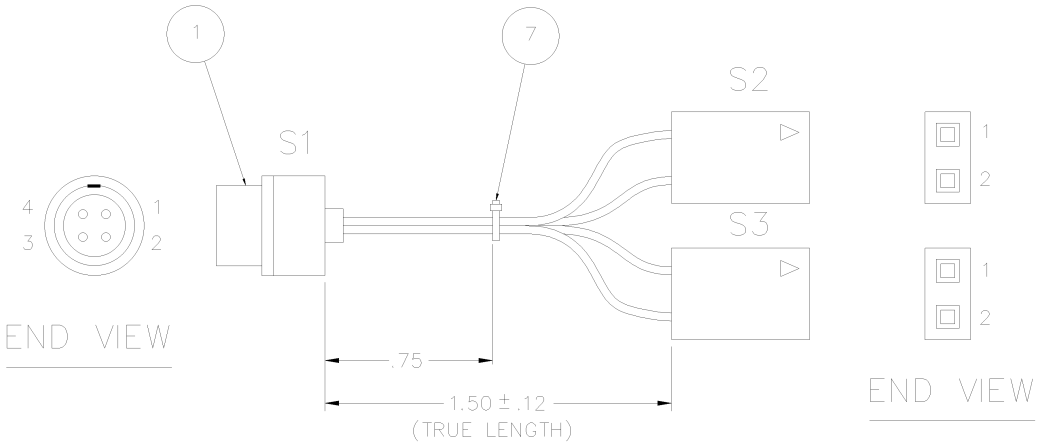

S1	S2	S3	COLOR	SIGNAL
1	1		BLACK	MIC IN
2	2		WHITE	AUDIO OUT
3		1	ORANGE	SWITCHED POWER
4		2	BLACK	GROUND

Chapter 9 : Product Specifications

Note : Product specifications subject to change.

PHYSICAL & ENVIRONMENTAL

Enclosure:	Sealed NEMA style steel with poly-enamel finish.
Size & Weight:	12.4 (W) x 10.0 (H) x 3.1 (D) in. [31.2 x 25.2 x 7.8 cm], 10.1 lbs. [4.6 Kg.].
Shock & Vibration:	Rated to MIL-STD 810D.
Power:	12 - 60 VDC @ < 3.0 Amp, Surge protection & filtering inc., AC power Optional with external convertor.
Operating Environment:	0 to 50ºC (14 to 122ºF), Optional -30ºC to 50ºC (-22 to 122ºF) with optional internal heater. Meets 4 inch per hour ambient rain.
Storage Temperature:	-30 to 60ºC (-22 to 122ºF)
Relative Humidity:	5 to 95 % (Non-Condensing)

ARCHITECTURE

Processor:	Integrated 32-Bit CISC General Purpose Processor with dedicated RISC Communications Processor; 8-bit auxiliary microcontroller.
FLASH Memory:	2 MByte (maximum)
RAM:	768 KByte (maximum)
EEPROM:	2 KByte

RADIO TECHNOLOGIES

Narrow Band UHF-FM:	406-512 MHz, 8-Channel Synthesized, 0.1 - 2.0 Watts, 14,400 bps maximum channel speed.
Spread Spectrum:	902-928 MHz, 7-Channel Synthesized, 122 Kbps maximum channel speed, direct sequence. 2.4 GHz Aironet 4500/4800 (1& 2 Mbps) 802.11 compliant

DISPLAY/KEYBOARD

Display:	Color - 16 colors, 10.4 in. (26.4cm) diagonal, 25 lines by 80 characters, backlit. Mono - 16 grayscale, 10.4 in. (26.4 cm) diagonal, 25 lines by 80 characters, backlit.

Font Sizes:	8 standard (single byte), ASCII and DEC multi-national character set; 2 standard (double byte) Chinese and Korean character sets.
Touch Panel:	Resistive, High Resolution, coated polyester over glass, surface durability meets TABER abrasion test ASTM-D-1044, CS-10F Wheel, 1000g.
Backlit Touch Pad:	All touch pad keys programmable with character strings or macro operations
Pop-up Keypads:	Standard keyboard designs for QWERTY Alpha & Alphanumeric, ABCD Alpha & Alphanumeric, Special Symbols, Punctuation, Function Keys, VT220, IBM 5250 and IBM3270. User designed keys can be programmed with any key function, character strings or macro operations.

EXTERNAL DEVICE INTERFACES

Serial I/O	20 pin locking multipurpose interface connector. Pin outs support terminal console (can be reassigned as an additional RS232 port); RS-232 communications (with flow control); diagnostic test points.
Ext. Keyboard	PC/AT keyboard interface
Scanner	10 pin locking connector for tethered decoded bar code scanner
Voice I/O	4 pin locking connector for external speaker microphone (UHF-FM Narrow Band systems only)
DC Power	3 pin locking connector for DC power source to termina

Chapter 10 : Revision History

Date	Revision	Description
June 13, 2001	2.22	Update FCC statement. Add “Antenna Location”. See preface.
January 24, 2001	2.21	Addition of Aironet 4800/4500 “air s” and “air a” commands to Radio Section.
July 14, 2000	2.2	Additional Aironet 4800/4500 radio configuration commands
June 13, 2000	2.1	Aironet 4800/4500 2.4 GHz radio support documentation. Add in descriptions of Demo Service.
April 5, 1999	2.0	Added product specifications as an appendix, included mechanical information, antenna specifications and mechanical installation drawings, cable diagrams. Added 5000 exterior dimensions, Power connector/cable schematic, Spkr/Mic pin outs to the installation reference. Reformat for double sided, eliminate reference to WTN
May 31, 1998	1.0	First Release

Index

“

“captive” connection 6-59

<

<Mode> key 5-33

2

2.4 GHz 5-37, **5-39**, 5-41, 5-42, 5-44, 6-57, 6-63, 9-88, 9-89
2.4 GHz (Aironet) 5-37, **5-39**, 5-41

7

7000 Base Controller 6-53, 6-54, 6-55, 6-56, 6-57

A

About the Current Session 6-53
Aironet 6-57, 6-63
Aironet 2.4 GHz radio system 5-41
Aironet 2.4 GHz Radio System 5-44
AllVersions **5-34**, **5-36**, 5-37, 5-39
ANSI or DEC compatible host 6-57
ANSI/VT220 compatible computer system 6-58
ASCII 6-49
Assigning Hot Keys to Keyboards 7-70
ASSIGNKEY **5-35**, **5-37**, 5-38, 5-41
AssignKey menu item 5-41
Auto-Connect 6-59, 6-60, 6-61
Auto-Connect configuration 6-59
Auto-Connect feature 6-59
Auto-Connect list *6-60*, 6-61
Auto-Connects **6-59**, 6-60, 6-62, 6-63
Auto-Login configuration 6-61
Auto-Login facility 6-61
Auto-Login Services 6-61

B

BarCode 4-30
barcode scanner support 6-56
bi-directional 1-5
Bit Rate **5-38**, **5-39**
Break/ShowAllKeys 7-67

C

Calibrate 4-29
Capacitive type touch-screens 1-4
Caps Key 7-68
Casc **4-25**
CD 3-21
Channel **5-33**, **5-34**, **5-36**, **5-38**, 5-40
ChanSelect **5-33**, **5-36**, **5-38**, **5-39**
Character Set 6-49
Chinese 6-49
Clone **5-34**, **5-36**, 5-37, **5-39**
CloneParam’s menu item 5-39
cloning 5-34, **5-36**, 5-37, **5-39**
Combine Keys 7-67
Command Line Interpreter (CLI) 6-56
Communication Settings 6-47
computer systems 1-5, 1-6
configuration 5-33, **5-34**, 5-35, **5-36**, **5-37**, **5-39**, 5-40
configuration security level 4-28
Connecting a Console Device 7-72
Consol 6-57
Console port 1-2
Console Port 1-3
Console session 6-56, 6-57, 6-59
Console window 3-15
Contrast buttons **3-18**
Contrast Level 3-18
Convert Caps 7-68
coverage zone 1-6
coverage zones 1-6
current DNS assignments 6-59
current security level number 4-28
custom keyboard 7-65

D

Data Bits 6-48
DC power source 1-1
Debug **5-34**, **5-36**, 5-37, 5-39
Deleting a Custom Keyboard 7-70
digital radio data communications 1-5
direct TELNET connection 6-63
Display 3-12
Display Settings 6-48
DNS (Dynamic Name Service) **6-58**
DNS name 6-59
DNS server functions 6-58
DNS services 6-57
DNS Services 6-58
Downloading Images to Flash Memory 7-73

E

Emulation Setting 6-47
Entering Key Data 7-69
Entering Key Text 7-69

ER 3-21
Error **5-35**, **5-36**, 5-40
Ethernet TCP/IP network 6-57
External bar code scanner 1-6
external console connection 6-57, 6-59
external console port 6-56, 6-57
external DC power 2-9
external RS-232 communications 1-6

F

Font 6-49
Font Map 6-49
function keys 5-41
Function keys 3-13

H

HeaderSize **5-38**
holster 1-6
Host ID 6-48
Host ID = 15 **6-57**
Host Service 6-47
Host Time Out **6-61**
Host Time Out configuration 6-61
Hot Key **5-35**, **5-37**, 5-38
hot key sequences 3-20

I

industrial vehicles 1-6
Installing a Task Image at Specific Address 7-75
Installing a Task Image into High Memory 7-75
interactive multi-session communications 1-6
internal RFID 1-6

K

Key Border 7-68
Key Features 7-68
Key Fonts 7-68
Keyboard Port 1-3
Keyboard/Key Size and Shape 7-66
KeyHide 7-67
keypad 1-6, 5-41
Korean 6-49

L

LCD display 1-6
load fir **7-74**
load flash now **7-74**
Loading a Task Image at Next Available Space 7-74
Loading the Complete Flash Image 7-74
local area radio data network 1-5
Local Console Session 6-56, 6-57
Local Prompt **6-60**, 6-61
local Telnet capability 6-61
Local Telnet Session **6-57**
Local Telnet Sessions 6-57
Location button **3-17**

M

MAC layer 5-40
memory 5-34, **5-36**, 5-37
Menu Bar **5-33**, **5-36**, 5-37, 5-41, 5-43
Min/Max button **3-17**
mnemonic text 6-58
mobile data devices 1-5
Mobile Device 1-5, 1-6
Mobile Devices **1-5**, 1-6
Model 1000 Data Modem **1-7**
Model 3000 Portable Terminal **1-6**
Model 5000 Mobile Terminal **1-6**
MONITOR **5-35**, **5-36**, 5-37
Monitor menu 5-40
monitoring 5-40

N

Navigation keys 3-13
NET layer 5-40
Network Devices **1-5**, 1-6
New Font 7-69
NewVer menu item 5-39
NodeAddress **5-38**, **5-39**

O

OldVer menu item 5-39

P

Page Caching 6-48
Passwords 4-26
PING test 5-42
PING utility 5-41
pistol grip 1-6
Pop-up Keyboard Settings 6-50
Pop-up keyboard toggles 3-13
Pop-up Keyboards 3-19
pop-up menu 3-18
portable industrial applications 1-7
power ON/OFF 1-2
power **ON/OFF switch** **2-9**
Powering down 2-9
powering up/down 2-9
pre-defined sample graphics 4-26
Presentation Manager 4-23
Presentation Manager window 3-15
Presentation Window Menus 4-23
printer 1-6
process controller 1-6

R

radio data communications 1-5, 1-6
radio data coverage 1-5
Radio Gauges 3-21
Radio Manager 5-33
Radio Manager window 3-15
radio statistics 5-35, **5-36**, 5-37, 5-40, 5-43
RAM Backup 2-10
Reboot. 5-39
remove hot keys 3-21
remove the current password 4-27
Resistive type touch screens 1-4
Restarting 2-10
Reviewing Keyboards 7-70
RF port 1-2
RF Port 1-3
RF site survey 5-41
route 5-35, **5-37**, 5-38, 5-40
RowOffset 7-67
RX 3-21

S

Saving Custom Keyboards 7-69
Saving the Setting 4-31
scaleable 1-5
Scanner Port 1-3
Screen Size 6-50
Scrolling 3-18
Security Options 4-26
Serial I/O Toggle 6-51
Session Cloning 6-51
SESSION layer 5-40
Session Manager windows 3-15
Session window 4-25
Session Window Menus 6-45
Shift Key 7-68

Size button 3-17

T

TCP/IP services 6-57
TELNET application 6-63
TELNET configurations 6-57
Telnet connection 6-57
Telnet Prompt 6-57
TELNET server 6-63
Telnet> 6-57, 6-58, **6-60**
Terminal TELNET Server 6-63
TESTS 5-34, **5-36**
Tests menu 5-40
Text editor keys 3-13
the Network Devices 1-6
Tile 4-25
Touch Screen Areas 3-11
Touch Screen Calibration 4-28
touch-screen 1-6
touch-sensitive Console window 7-71
TX 3-21

U

unique **IP (Internet Protocol)** address 6-57
Using a PC Keyboard 7-70

V

Voice Port 1-3

W

waveNet wireless lan 1-5
WaveNet Wireless LAN5-33, **5-35**, 5-37, **5-38**, **5-39**
window menus password 4-27
Window Switching 3-15
wired terminal 1-6
wireless LAN 6-57