Emerson®

AM / FM / TV Bands
Instant Weather
Portable Radio
with LCD Clock

OWNER'S MANUAL

RP1103

Visit our web site at www.emersonradio.com

CAUTION

TO PREVENT FIRE OR SHOCK HAZARD, DO NOT USE THIS PLUG WITH AN EXTENSION CORD, RECEPTACLE OR OTHER OUTLET UNLESS THE BLADES CAN BE FULLY INSERTED TO PREVENT BLADE EXPOSURE. TO PREVENT FIRE OR SHOCK HAZARD, DO NOT EXPOSE THIS APPLIANCE TO RAIN OR MOISTURE.

The lightning flash with arrow-head symbol, within an equilateral triangle is intended to alert the user to the presence of uninsulated 'dangerous voltage' within the product's enclosure that may be of sufficient magnitude to constitute a risk of electric shock to persons.	**CAUTION** RISK OF ELECTRIC SHOCK DO NOT OPEN WARNING: TO REDUCE THE RISK OF ELECTRIC SHOCK DO NOT REMOVE COVER (OR BACK), NO USER SERVICEABLE PARTS INSIDE REFER SERVICING TO QUALIFIED SERVICE PERSONNEL.	The exclamation point within an equilateral triangle is intended to alert the user to the presence of important operating and maintenance (servicing) instructions in the literature accompanying the appliance.

The Caution Marking was located at the bottom enclosure of the apparatus.

IMPORTANT SAFETY INSTRUCTIONS

1.) Read these instructions.
2.) Keep these instructions.
3.) Heed all warnings.
4.) Follow all instructions.
5.) Do not use this apparatus near water.
6.) Clean only with dry cloth.
7.) Do not block any ventilation openings. Install in accordance with the manufacturer's instructions.
8.) Do not install near any heat sources such as radiators, heat registers, stoves, or other apparatus (including amplifiers) that produce heat.
9.) Do not defeat the safety purpose of the polarized or grounding-type plug. A polarized plug has two blades with one wider than the other. A grounding type plug has two blades and a third grounding prong. The wide blade or the third prong is provided for your safety. If the provided plug does not fit into your outlet, consult an electrician for replacement of the obsolete outlet.
10.) Protect the power cord from being walked on or pinched particularly at plugs, convenience receptacles, and the point where they exit from the apparatus.
11.) Only use attachments / accessories specified by the manufacturer.
12.) Unplug this apparatus during lightning storms or when unused for long periods of time.
13.) Refer all servicing to qualified service personnel. Servicing is required when the apparatus has been damaged in any way, such as power-supply cord or plug is damaged, liquid has been spilled or objects have fallen into the apparatus, the apparatus has been exposed to rain or moisture, does not operate normally, or has been dropped.
14.) This appliance shall not be exposed to dripping or splashing water and no object filled with liquids such as vases shall be placed on the apparatus.
15.) Do not overload wall outlet. Use only power source as indicated.
16.) Use replacement parts as specified by the manufacturer.
17.) The product may be mounted to a wall only if recommended by the manufacturer.
18.) Upon completion of any service or repairs to this product, ask the service technician to perform safety checks.

Before We Begin

Thank you for purchasing this Emerson audio product. The Emerson brand is your assurance of quality, performance and value.

Our engineers have included many useful and convenient features in this product. Please be sure to read this Owner's Manual completely to make sure you are getting the maximum benefit from each feature.

This product was manufactured using the highest quality components and standards of workmanship. It was tested by Emerson inspectors and found to be in perfect working order before it left our factory. However, there is always the chance that some problem may occur because of rough handling during shipment to the retail store or to the final consumer.

If, after reading this Manual, you experience any problems with the operation of this product, please refer to the instructions for obtaining service at the end of this Manual. Emerson and Emerson retailers are committed to your satisfaction.

Once again, thanks for purchasing this Emerson audio product.

For future reference, record the serial number in the space provided.

Model No: RP1103

Serial No: _____

RP1103_010505.p65 2 5/1/2005, 11:49

IMPORTANT NOTES

- Avoid installing this unit in places exposed to direct sunlight or close to heat radiating appliances such as electric heaters, on top of other stereo equipment that radiates too much heat, places lacking ventilation or dusty areas, places subject to constant vibration and/or humid or moist areas.
- Operate controls and switches as described in the manual.
- Before turning on the power, make certain that the power cord is properly installed.
- When moving the set, be sure to first disconnect the AC power cord.

***NOTE**: The manufacturer is not responsible for any radio or TV interference caused by unauthorized modifications to this equipment. Such modifications could void the User's authority to operate the equipment.*

FCC Information

This equipment has been tested and found to comply with the limits for a Class B digital device, pursuant to Part 15 of the FCC Rules. These limits are designed to provide reasonable protection against harmful interference in a residential installation. This equipment generates, uses, and can radiate radio frequency energy and, if not installed and used in accordance with the instructions, may cause harmful interference to radio communications. However, there is no guarantee that interference will not occur in a particular installation. If this equipment does cause harmful interference to radio or television reception, which can be determined by turning the equipment off and on, the user is encouraged to try to correct the interference by one or more of the following measures:

- Reorient or relocate the receiving antenna.
- Increase the separation between the equipment and receiver.
- Connect the equipment into an outlet on a circuit different from that to which the receiver is connected.
- Consult the dealer or an experienced radio/TV technician for help.

This device complies with Part 15 of the FCC Rules. Operation is subject to the following two conditions:

(1) This device may not cause harmful interference, and

(2) This device must accept any interference received, including interference that may cause undesired operation.

PREPARATION FOR USE

Unpacking And Set Up

- Remove the radio from the carton and remove all packing material from the radio. We suggest that you save the packing material, if possible, in the unlikely event that your radio ever needs to be returned for service. The original carton and packing material is the only safe way to pack your radio to protect it from damage in transit.
- Remove any descriptive labels or stickers on the front or top of the cabinet. Do not remove any labels or stickers from the back or bottom of the cabinet.
- Note the serial number on the bottom of your radio and write this number in the space provided on Page 2 of this manual.
- Place your radio on a level surface such as a table, desk or shelf, convenient to an AC outlet, out of direct sunlight, and away from sources of excess heat, dirt, dust, moisture, humidity, or vibration.
- Unwind the AC power cord and extend it to its full length.

AC Operation

The AC power cord is located inside the battery compartment. It is permanently attached to the radio to prevent loss.

1.) Open the battery compartment by pressing on the " ▼ " marks on the cover and sliding it downward in the direction of the arrows.

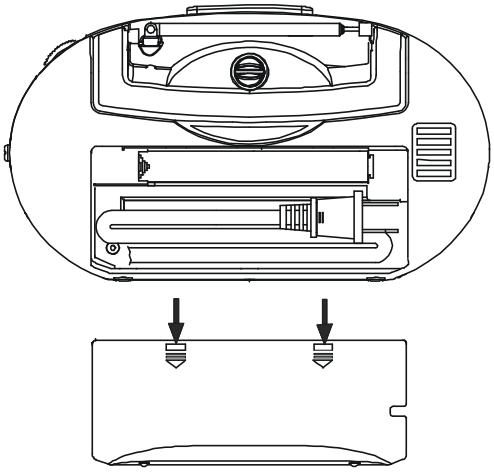

2.) Remove the coiled AC cord form the storage compartment and extend it to its full length.

3.) Position the cover over the battery compartment and place the cord into the notch on the battery compartment cover as shown.

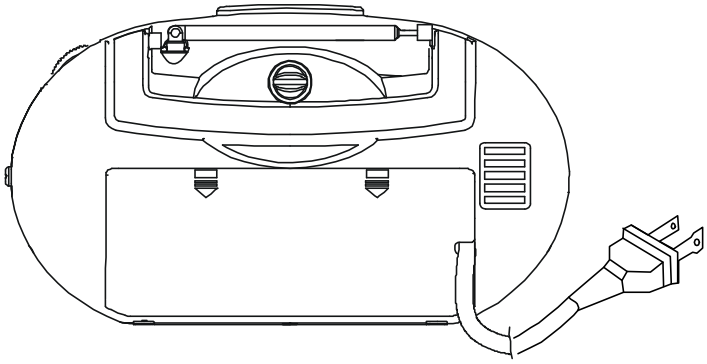

4.) Slide the battery cover upward until it snaps back into place.
Connect the AC cord to your 120V 60Hz AC outlet.

***Note**: When the AC power cord is connected to the outlet the power source automatically switches to AC. You may leave batteries inside the unit if desired. There is no battery consumption when the power cord is connected to an AC outlet.*

Caution !!

This radio is designed to operate on normal 120V 60Hz AC power only. Do not attempt to operate the radio on any other power source. You could cause damage to the radio that is not covered by your warranty.

This radio uses a polarized AC plug which has one blade wider than the other. This plug will only fit into a polarized AC outlet. This is a safety feature. If the plug will not fit, you may have an older non-polarized AC outlet. Do not defeat the safety feature by trying to file the wider blade, or replacing the plug. Contact an electrician to replace your outdated outlet.

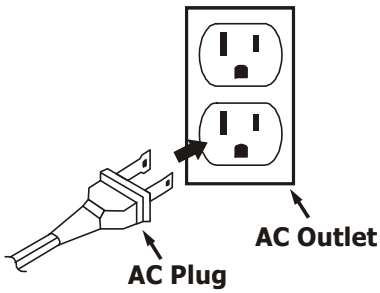

Battery Operation

This unit requires 4 “**AA**” batteries, not included. We recommend using a well-known brand of alkaline batteries for longest life and best performance.

1.) Open the battery compartment by pressing on the “ ” marks on the cover and sliding it downward in the direction of the arrows.

2.) If necessary, fold the AC power cord as shown and push it back into the cord storage compartment.

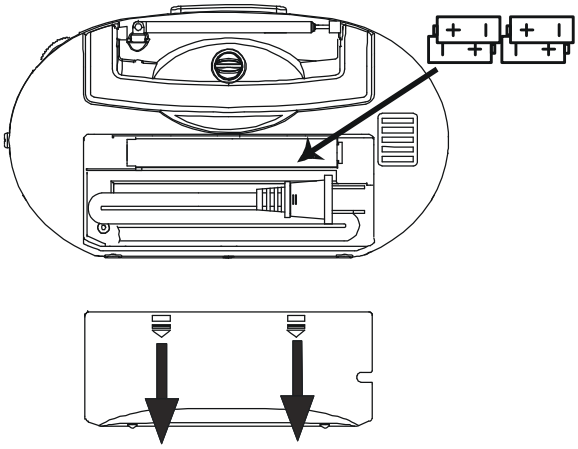

3.) Insert the 4 “AA” batteries into the battery compartment as shown. Be sure to observe the polarity markings inside the compartment. If the batteries are inserted incorrectly the unit will not work.

4.) Slide the battery cover upward until it snaps back into place.

When the radio sound becomes weak or distorted it is time to change the batteries. Replace all 4 batteries with fresh, new alkaline batteries at the same time. Do not mix old and new batteries, or different types of batteries together.

BATTERY PRECAUTIONS

Follow these precautions when using batteries in this device:

1. Use only the size and type of batteries specified.
2. Be sure to follow the correct polarity when installing the batteries as indicated in the battery compartment. Reversed batteries may cause damage to the device.
3. Do not mix different types of batteries together (e.g. Alkaline and Carbon-Zinc) or old batteries with fresh ones.
4. If the device is not to be used for a long period of time, remove the batteries to prevent damage or injury from possible battery leakage.
5. Do not try to recharge batteries not intended to be recharged; they can overheat and rupture. (Follow battery manufacturer’s directions.)

Protect Your Furniture

This model is equipped with non-skid rubber 'feet' to prevent the product from moving when you operate the controls. These 'feet' are made from non-migrating rubber material specially formulated to avoid leaving any marks or stains on your furniture. However certain types of oil based furniture polishes, wood preservatives, or cleaning sprays may cause the rubber 'feet' to soften, and leave marks or a rubber residue on the furniture. To prevent any damage to your furniture we strongly recommend that you purchase small self-adhesive felt pads, available at hardware stores and home improvement centers everywhere, and apply these pads to the bottom of the rubber 'feet' before you place the product on fine wooden furniture.

LOCATION OF CONTROLS AND INDICATORS

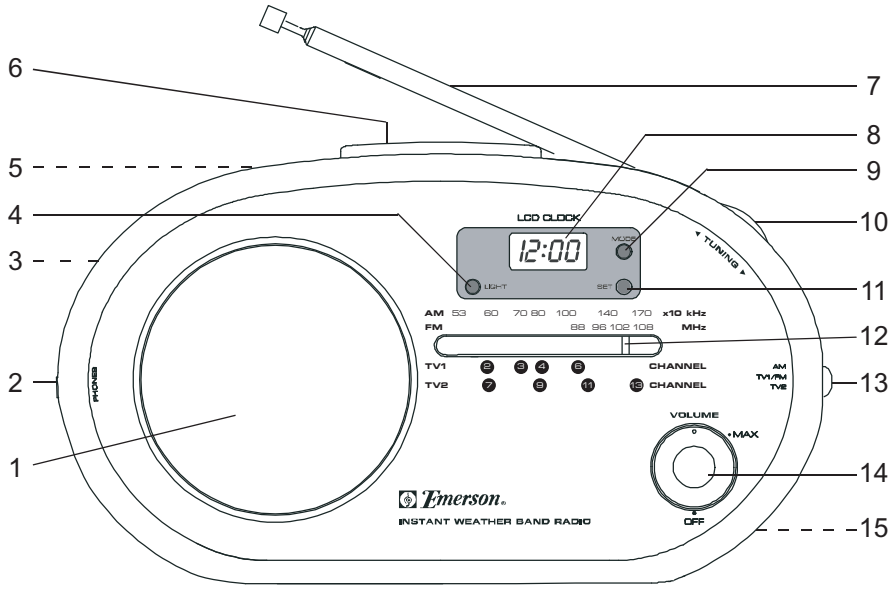

1.) Speaker.

2.) **PHONES** Jack.

3.) Carrying Handle. (Back Cabinet).

4.) Display Back **LIGHT** Button.

5.) **WEATHER BAND FINE TUNING** Control (Back Cabinet).

6.) **WEATHER** Band Button.

7.) FM/TV/Weather Band Telescopic Antenna.

8.) **LCD CLOCK**.

9.) Clock **MODE** Button.

10.) **TUNING** Control.

11.) Clock **SET** Button.

12.) Dial Pointer.

13.) Band (**AM-FM/TV1-TV2**) Selector Switch.

14.) **VOLUME** Control. Power “On/**OFF**” Switch.

15.) Battery & AC Cord Compartment. (Back Cabinet)

OPERATING INSTRUCTIONS

Radio Operation

1.) Turn on the radio by rotating the **VOLUME** control clockwise.

2.) Move the Band Selector switch to select the desired band (**AM**, **FM/TV1** or **TV2**).

- Select **AM** to tune AM radio stations.
- Select **FM/TV1** to tune FM radio stations and TV channels 2 through 6.
- Select **TV2** to tune TV channels 7 through 13.

3.) Tune the desired station by rotating the **TUNING** control.

4.) Adjust the **VOLUME** control as desired.

5.) To turn the unit 'Off', rotate the **VOLUME** control counterclockwise until a click sound is heard.

Weather Band Operation

This radio receives continuous U.S. Government Weather Broadcasts from the National Oceanic and Atmospheric Administration (NOAA), part of the Department of Commerce. This National Weather Radio service includes more than 750 transmitters covering all 50 states and adjacent coastal waters, Puerto Rico, the U. S. Virgin Islands, and the U.S. Pacific Territories. The weather broadcasts are transmitted on seven separate bands from **162.400 MHz** to **162.550 MHz**.

To hear the weather reports, press the **WEATHER** button on the top cabinet at any time. If you were listening to another band the radio will automatically switch to the weather band.

The volume level is fixed at optimum listening level on Instant Weather operation. In order to increase or decrease the volume level, turn the volume control up or down.

***Note**: Since the National Weather Radio transmitters operate at much lower power than commercial radio stations, the volume on the weather band will be lower than for AM/FM or TV bands. This is normal and not an indication of any trouble with your unit. Adjust the **VOLUME** when listening to the Weather Band if necessary.*

If you do not hear the weather reports when you press the **WEATHER** button, very slowly rotate the **WEATHER BAND FINE TUNING** control on the back cabinet of the radio until you are receiving the frequency of the National Weather Radio transmitter that is broadcasting in your area. You only need to do this one time, unless you move to a different area. In that case you might have to adjust the **WEATHER BAND FINE TUNING** control again.

Antennas

AM – This unit has a built-in ferrite rod antenna, which eliminates the need for an external antenna, and provides adequate reception in most areas. If reception is weak, turn the unit to improve reception.

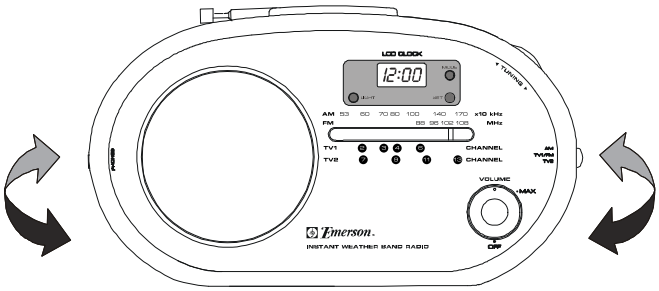

FM, TV, WEATHER BAND – The telescopic antenna on the top of the unit is for these bands only. If reception is weak, adjust the length of the antenna.

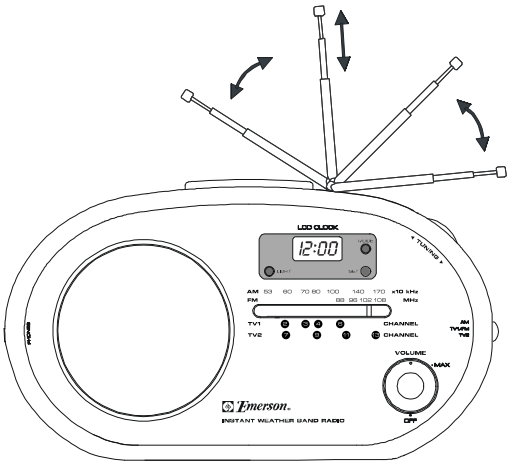

Setting The Date And Time

***Note**: The month and date are displayed numerically (MM/DD).*

For example, February 28th is displayed as "2 28".

1.) Press the **MODE** button twice. The Month display appears.

2.) Press the **SET** button repeatedly to advance the display to the correct month.

3.) Press the **MODE** button again. The Day display appears.

4.) Press the **SET** button repeatedly to advance the display to the correct day.

5.) Press the **MODE** button again. The Hour display appears together with either the "**A**" (AM) or "**P**" (PM) indicator.

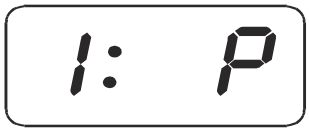

6.) Press the **SET** button repeatedly to advance the display to the correct hour, AM or PM.

7.) Press the **MODE** button again. The Minutes display appears.

8.) Press the **SET** button repeatedly to advance the display to the correct minute.

9.) Press the **MODE** button once more, then press the **SET** button. The clock begins to run.

***Note**: To see the date at any time, press the **SET** button. The display will change from time to month/date for a few seconds and then change back to time display automatically.*

***Note**: This radio includes a special circuit that will keep the clock running for a certain time after the batteries are exhausted, even if the unit is not connected to the AC outlet. However if you do not replace the batteries for a long period of time the clock will stop running and will need to be reset after fresh batteries are installed.*

Display Light

To see the time in low-light conditions, press the **LIGHT** button. The display lighting will turn on for a few seconds and then shut off automatically.

Earphone Jack

For private listening, an 🎧 **PHONES** jack is located on the left side of the radio. Plug in the earphone (not included) and adjust the volume to a comfortable level. The internal speaker is disconnected when the earphone is plugged into the radio.

CARE AND MAINTENANCE

There are no user serviceable parts inside this radio. Please refer all service problems to a qualified service facility.

If the cabinet becomes dusty, wipe the exterior with a soft dust cloth only. Never use dusting sprays or polishes on the cabinet.

If the cabinet becomes dirty or smudged with fingerprints it may be wiped with a soft cloth that has been slightly dampened with a mild soap and water solution. Always disconnect the power cord from the AC outlet before cleaning, and never allow any liquid to get inside the cabinet.

Emerson®
SERVICE

TO FIND THE LOCATION AND PHONE NUMBER OF YOUR NEAREST SERVICE CENTER PERMITTED TO PERFORM WARRANTY...

CALL TOLL FREE: 1-800-695-0098

FOR ADDITIONAL SET-UP OR OPERATING ASSISTANCE
PLEASE CALL:
1-800-898-9020

FOR CUSTOMER SERVICE, PLEASE WRITE TO:
Emerson Radio Corp.
Consumer Affairs Dept.
1901 Diplomat Drive,
Farmers Branch, TX 75234.

RP1103_010505.p65 13 5/1/2005, 11:49

LIMITED WARRANTY

Emerson Radio Corp. warrants manufacturing defects in original material, including original parts and workmanship, under normal use and conditions, for a period of ninety (90) days from the date of original purchase in the U.S. With your dated proof of purchase, we will provide repair service at no charge for labor and parts at an authorized Depot Repair Facility, or replace the product in our discretion. For repair or replacement, pack your unit in a padded box, enclose your check or money order payable to Emerson Radio Corp. in the amount of $5.00 (not required by California residents) to cover shipping and handling costs, and enclose a copy of your proof of purchase. Send your unit to:

Emerson Radio Corp.
1901 Diplomat Drive,
Farmers Branch, TX 75234.

This warranty does not cover damage from negligence, misuse, abuse, accident, failure to follow operating instructions, commercial use, rental, repairs by an unauthorized facility, or products purchased, used, serviced or damaged outside of the United States.

THIS WARRANTY GIVES YOU SPECIFIC LEGAL RIGHTS, AND YOU MAY ALSO HAVE OTHER RIGHTS WHICH VARY FROM STATE TO STATE.

AU898H

Emerson®

EMERSON
Part No. 16-2979
501-01

Printed in China