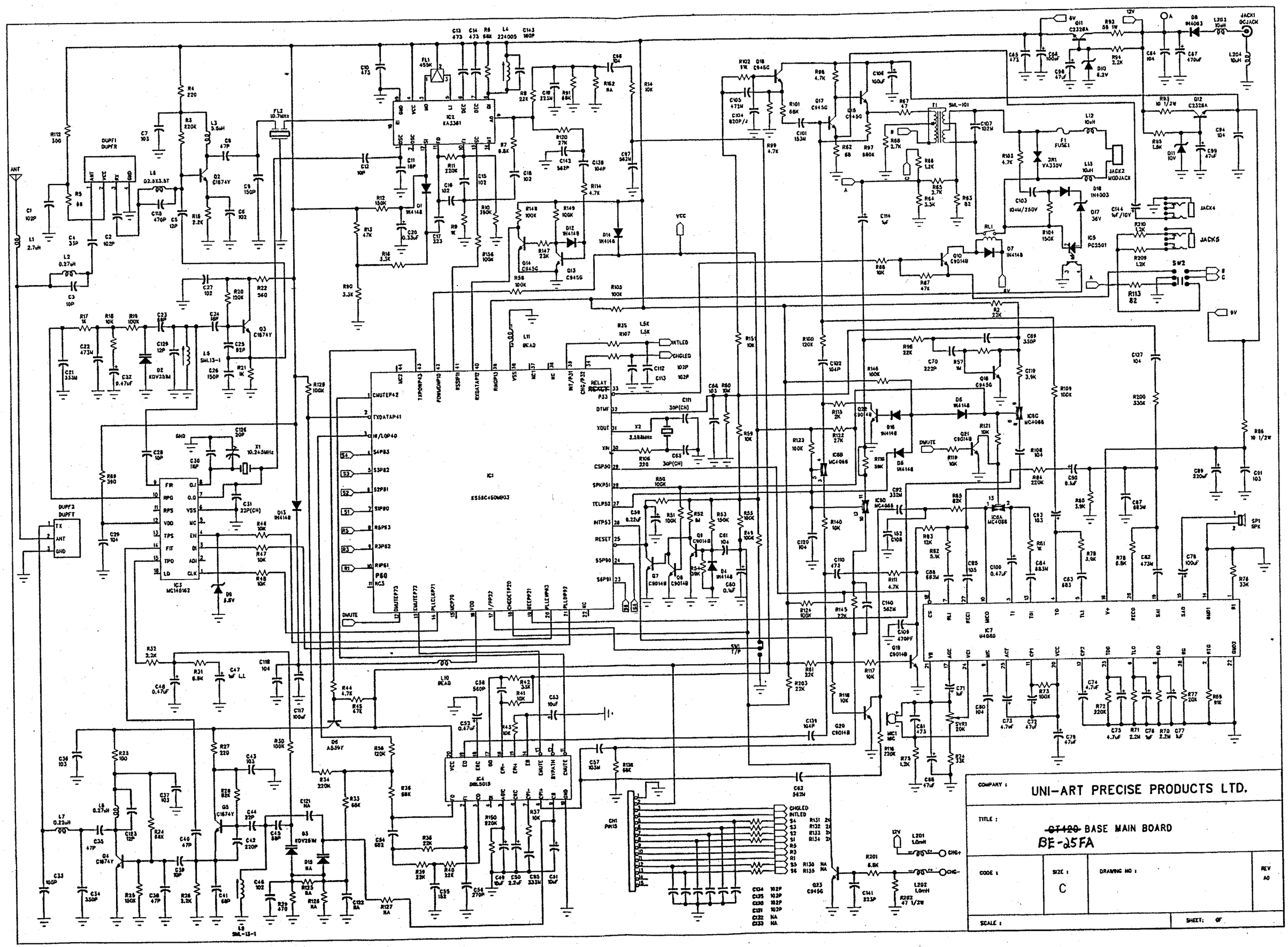
COMPANY :
UNI-ART PRECISE PRODUCTS LTD.
TITLE :
~~CT120~~ BASE MAIN BOARD
BE-25FA
CODE :
SIZE :
C
DRAWING NO :
REV
A0
SCALE :
SHEET: OF

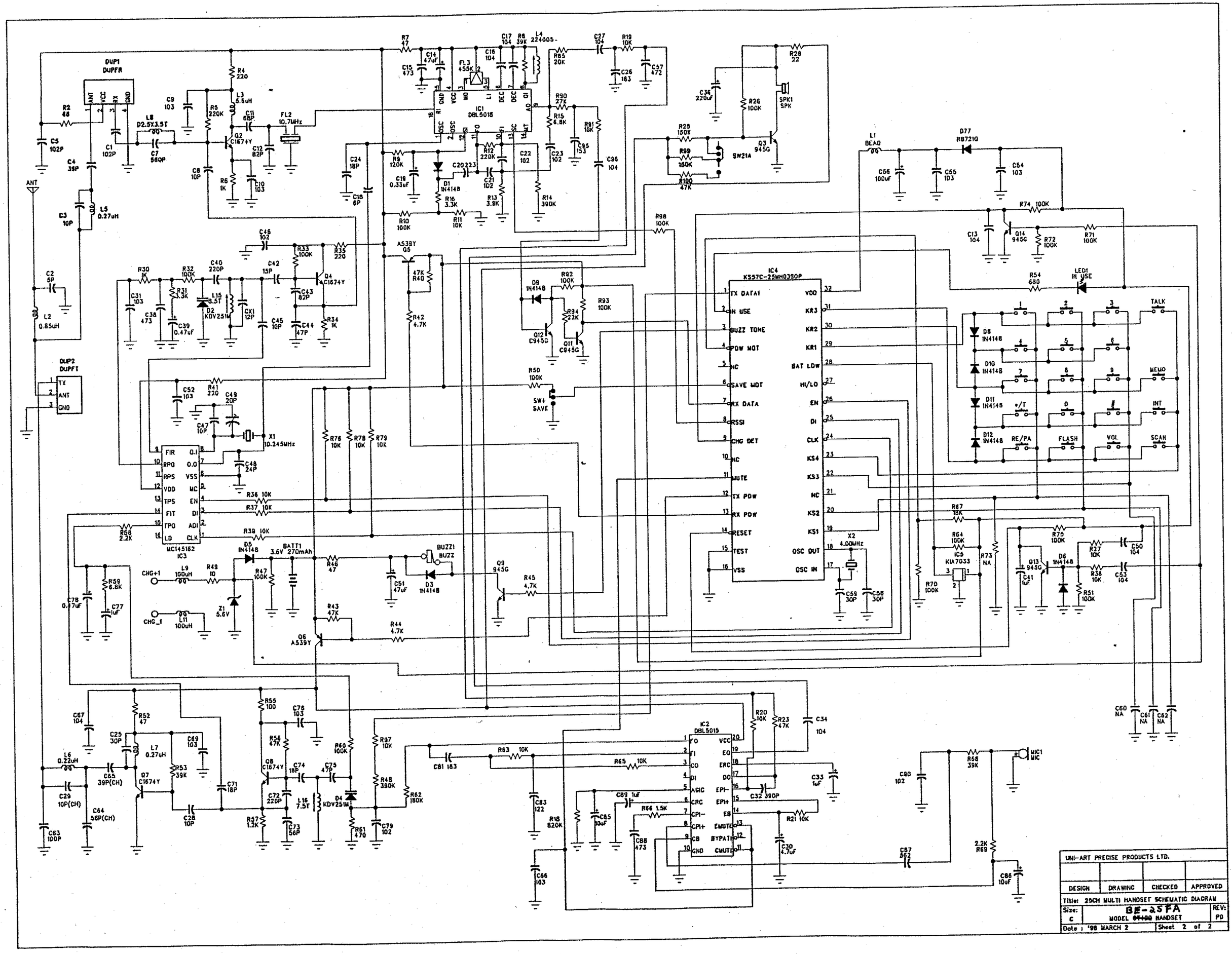
DUP1
DUPFR
DUP2
DUPFT
IC1
DBL5018
IC2
DBL5015
IC3
MC145162
IC4
K557C-25MH0350P
IC5
KIA7033
Q2
C1674Y
Q4
C1674Y
Q5
A539Y
Q6
A539Y
Q7
C1674Y
Q8
C1674Y
Q9
945G
Q11
C945G
Q12
C945G
Q13
945G
Q14
945G
Q3
945G
SW21A
SW4
SAVE
SPK1
SPK
BATT1
270mAh
BUZZ1
BUZZ
MIC1
MIC
X1
10.245MHz
X2
4.00MHz
FL2
10.7MHz
FL3
455K
L4
224005-
LED1
IN USE
TALK
MEMO
INT
SCAN
VOL
FLASH
RE/PA
UNI-ART PRECISE PRODUCTS LTD.
DESIGN
DRAWING
CHECKED
APPROVED
Title: 25CH MULTI HANDSET SCHEMATIC DIAGRAM
Size: C
BE-25FA
MODEL ~~BT400~~ HANDSET
REV: P0
Date : '98 MARCH 2
Sheet 2 of 2

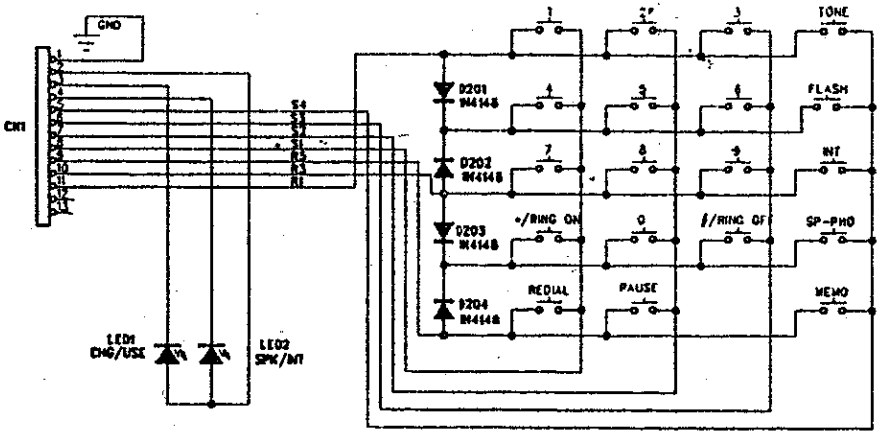
GND
CN1
S4
S3
S2
S1
R3
R2
R1
D201
1N4148
D202
1N4148
D203
1N4148
D204
1N4148
1
2
3
TONE
4
5
6
FLASH
7
8
9
INT
*/RING ON
0
#/RING OF
SP-PHO
REDIAL
PAUSE
MEMO
LED1
CHG/USE
LED2
SPK/INT