MotorGuide®

8M0097265 814 eng

Draft

Xi5 Wireless Edition

© 2016 Mercury Marine

ORIGINAL LANGUAGE INSTRUCTIONS

FCC and IC Compliance Statement

Xi5 WIRELESS FOOT PEDAL

Xi5 WIRELESS REMOTE

This device complies with part 15 of the FCC Rules. Operation is subject to the following two conditions:

1. This device may not cause harmful interference.
2. This device must accept any interference received including interference that may cause undesired operation.

This device complies with FCC Rules.

Changes or modifications not expressly approved by the party responsible for compliance could void the user's authority to operate the equipment.

This device complies with Industry Canada license-exempt RSS standard(s). Operation is subject to the following two conditions: (1) this device may not cause interference, and (2) this device must accept any interference, including interference that may cause undesired operation of the device.

Le présent appareil est conforme aux CNR d'Industrie Canada applicables aux appareils radio exempts de licence. L'exploitation est autorisée aux deux conditions suivantes: (1) l'appareil ne doit pas produire de brouillage, et (2) l'utilisateur de l'appareil doit accepter tout brouillage radioélectrique subi, même si le brouillage est susceptible d'en compromettre le fonctionnement.

N2523

EU Compliance Statement

Attwood Corporation hereby declares that the MotorGuide Xi5 trolling motor is in compliance with the essential requirements and other relevant provisions of the 99/5/EC R&TTE directive.

CE Declaration

Manufacturer: **Attwood Corporation**

Address: 1016 N. Monroe

Lowell, MI 49415 USA

Telephone: 616-897-9241

Authorized Representative: **Brunswick Marine**

Parc Industriel de Petit-Rechain

B-4800

Verviers, Belgium

Telephone: +32(0)87323222

Product: **MotorGuide Xi5 Series**

Model: includes all 12, 24, and 36 ⎓ volt DC models

Council Directive 1999/5/EC - Radio and Telecommunications Terminal Equipment (R&TTE)

- **EN 300 440-1 V1.6.1:** EMC and Radio spectrum Matters; Short Range Devices.
- **EN 301 489-1 V1.9.2:** EMC and Radio spectrum Matters; Radio Equipment.

Council Directive 2004/40/EC - Health and Safety Requirements

- **EN 62311:2008** - Assessment of electronic and electrical equipment related to human exposure restrictions for electromagnetic fields.

Council Directive 2004/108/EC - Electromagnetic Compatibility

- **EN 55012:2008; A1:2010** - Vehicles, boats and internal combustion engines.

Council Directive 98/96/EC - Maritime Equipment Directive

- **EN 60945:2002+C1:2008** - Maritime navigation and radiocom. equip. (Motor systems)
    - CISPR16 - Conducted and Radiated Emissions
    - EN61000-4-2:2008 ESD
    - EN61000-4-3:2006 Radiated Immunity
    - EN61000-4-4:2004 EFT
    - EN61000-4-5:2005 Surges
    - EN61000-4-6:2008 Conducted Susceptibility
    - EN61000-4-8:2001 Magnetic Field Immunity
    - EN6100-4-11:2004 Voltage Dips and Interrupts

Council Directive 2006/42/EC - Machinery

- **EN ISO 12100** - Safety of machinery - General principles for design, risk assessment and reduction

An official copy of the Declaration of Conformity can be found at http://www.motorguide.com/support/certifications.

Environmental Compliance Statement

All MotorGuide products that are subject to the 2002/96/EC WEEE directive are compliant with the WEEE marking requirement. Such products are marked with the crossed-out wheelie bin (WEEE symbol shown below) in accordance with European Standard EN50419.

54539

The symbol on the product or its packaging indicates that this product must not be disposed of with your other household waste. Instead, it is your responsibility to dispose of your waste equipment by handing it over to a designated collection point for the recycling of waste electrical and electronic equipment. The separate collection and recycling of your waste equipment at the time of disposal will help conserve natural resources and ensure that it is recycled in a manner that protects human health and the environment. For more information about where you can drop off your waste for recycling, please contact your local authority, or where you purchased your product.

Important Operator Information

ISO 7000-0434B - Caution symbol

Consult this documentation in all cases where this symbol appears. This symbol is used to inform you of any potential HAZARD or actions that require your attention.

Use of this equipment in a manner other than that specified by Attwood Corporation may compromise the design integrity and become unsafe.

WARNING: This equipment is not intended for use in explosive environments.

ADVERTENCIA: Este equipo no está diseñado para uso en atmósferas explosivas.

AVVERTIMENTO: Questa apparechiatura non è inteso per l'uso in ambienti esplosivi.

WARNUNG: Das Ausrüstung darf in einer explosiven Umgebung NICHT verwendet werden.

ADVERTISSEMENT: Cet équipement n'est pas prévu pour une utilisation das des environments explosifs.

Thank You

Thank you for purchasing a MotorGuide Xi5 Wireless Trolling Motor.

The Xi5 is designed and engineered to deliver the performance that anglers expect: quiet operation, reliability, and precise control. We're confident that the Xi5 will enhance your fishing experience and we appreciate that you chose MotorGuide.

Please take a moment to register your new Xi5 at motorguide.com—or complete and mail the enclosed Warranty Registration Card.

Warranty Message

The product you have purchased comes with a **Limited Warranty** from MotorGuide. The terms of the policy are set forth in the **Warranty Information** section of this manual. The policy statement contains a description of the duration of coverage, **important disclaimers and limitations of damages,** and other related information. Please review this important information.

The description and specifications contained herein were in effect at the time this manual was approved for printing. MotorGuide, whose policy is one of continued improvement, reserves the right to discontinue models at any time, to change specifications, designs, methods, or procedures without notice and without incurring obligation.

MotorGuide, Lowell, Michigan U.S.A.

Mercury Marine

Eagle and Lowrance are registered trademarks of Navico Inc. Garmin is a registered trademark of Garmin Ltd. Humminbird is a registered trademark of Johnson Outdoors Marine Electronics, Inc. Vexilar is a registered trademark of Vexilar, Inc.

Copyright and Trademark Information

© MERCURY MARINE. All rights reserved. Reproduction in whole or in part without permission is prohibited.

Alpha, Axius, Bravo One, Bravo Two, Bravo Three, Circle M with Waves Logo, K-planes, Mariner, MerCathode, MerCruiser, Mercury, Mercury with Waves Logo, Mercury Marine, Mercury Precision Parts, Mercury Propellers, Mercury Racing, MotorGuide, OptiMax, Quicksilver, SeaCore, Skyhook, SmartCraft, Sport-Jet, Verado, VesselView, Zero Effort, Zeus, #1 On the Water and We're Driven to win are registered trademarks of Brunswick Corporation. Pro XS is a trademark of Brunswick Corporation. Mercury Product Protection is a registered service mark of Brunswick Corporation.

Warranty Information

MotorGuide Two Year Limited Warranty..... 1

General Information and Component Identification

Component Identification..... 4
Recording the Serial Number..... 5
Product Registration..... 5
Boater's Responsibilities..... 6
Protecting People in the Water..... 6
Passenger Safety Message..... 6
Safe Boating Suggestions..... 6

Product Installation, Wiring, and Battery Information

Installing the Trolling Motor..... 8
Recommended Practice and Procedures..... 12
Battery Recommendations..... 12
Battery Precautions..... 13
Establishing a Common Ground..... 13
Wire Color Code Abbreviations..... 14
Battery Connection..... 14
Activating the Wireless Foot Pedal..... 18
Activating the Handheld Remote..... 18
Connecting the Sonar Display to the Trolling Motor..... 19

Trolling Motor Operation

Status Indicator Light Identification..... 21
Stowing and Deploying the Trolling Motor..... 21
Adjusting the Motor Depth..... 25
Foot Pedal Operation..... 26
Handheld Remote Operation..... 30

Maintenance and Storage

Trolling Motor Care..... 32
Inspection and Maintenance Schedule..... 32
Storage Preparation..... 34
Battery Inspection..... 35
Propeller Replacement..... 35

Owner Service Assistance

Troubleshooting..... 38
Troubleshooting the Foot Pedal and Handheld Remote..... 41
Service Assistance..... 44
Mercury Marine Service Offices..... 45

WARRANTY INFORMATION

MotorGuide Two Year Limited Warranty

KEEP YOUR ORIGINAL PURCHASE RECEIPT OR BILL OF SALE.

1. For recreational use customers, MotorGuide electric trolling motors are warranted to the original retail purchaser to be free from defects in material or workmanship for a period of two years from the date of purchase.
2. To obtain warranty service, the purchaser should deliver or return the unit (postage prepaid and insured) to any MotorGuide authorized service dealer. DO NOT RETURN TO PLACE OF PURCHASE unless they are an authorized service center. Products returned by mail should be carefully packaged and include a note describing the nature of the problem and/or service requested, customer address, and phone number. A copy of the receipt, bill of sale, registration verification or other proof of purchase is required with the return of the product for warranty consideration. Warranty claims will not be accepted without presentation of purchase receipt for the trolling motor, other verification of registration, or bill of sale for a boat package.
3. MotorGuide, at its discretion, will repair or replace items covered under the terms of this warranty. Neither MotorGuide nor MotorGuide service dealers are responsible for damages to MotorGuide products due to repairs performed by anyone other than an authorized MotorGuide service dealer. Neither MotorGuide nor Attwood is responsible for failure or damage caused by improper installation, set-up, preparation, or previous service or repair errors.
4. For commercial use and government use customers, MotorGuide electric trolling motors are warranted to the original retail purchaser to be free from defects in material or workmanship for one (1) year. Commercial use is defined as any work or employment-related use of the product, or any use of the product which generates income, for any part of the warranty period, even if the product is only occasionally used for such purpose such as rental fleets, guides, fish camps or similar operations. Warranty is not transferable to any subsequent purchaser. The Mercury Product Protection plan is not available to commercial use or government use customers.
5. MotorGuide Composite Shaft Limited Lifetime Warranty. MotorGuide composite shafts are warranted to the original retail purchaser to be free of defects in material or workmanship for the lifetime of the original purchaser. MotorGuide will provide a new composite shaft at no cost for any composite shaft which contains a defect in material or workmanship. The installation costs are the sole responsibility of the purchaser.

WARRANTY INFORMATION

6. Warranty coverage is available to customers that purchase from an authorized dealer or retailer that is authorized by MotorGuide Marine to distribute the product in the country in which the sale occurred. Warranty coverage and duration varies by the country in which the owner resides. This Limited Warranty begins on the date the product is first sold to a purchaser or the date on which the product is first put into service, whichever occurs first. MotorGuide accessories are covered by this Limited Warranty for a coverage period of one (1) year from the date of retail sale. The repair or replacement of parts, or the performance of service under this warranty, does not extend the life of this warranty beyond its original expiration date. Promotional warranties are not included in this statement and coverage may vary by promotion. Product either sold or put into service more than six years from date of manufacture is excluded from warranty coverage.
7. This warranty does not apply to normal worn parts, for example, worn cables, adjustments, or product damage due to: 1) neglect, lack of maintenance, accident, abnormal operation or improper installation or service; 2) abuse, such as, bent metal columns, bent armature shafts, broken control cables, etc., accidents, modifications, misuse, excessive wear or damage caused by an owner’s failure to provide reasonable and necessary installation or care; 3) use of an accessory or part not manufactured by MotorGuide or Attwood; 4) alteration or removal of parts; 5) opening the lower unit (motor) by anyone other than an authorized MotorGuide service center will void this warranty.
8. We reserve the right to improve the design of any trolling motor without assuming any obligation to modify any trolling motor previously manufactured.
9. All serialized "Service-Repair" trolling motors receive a (1) one year warranty. Non-serialized "Service-Repair" electric trolling motors are NOT warranted. "Service-Repair" motor denotes a trolling motor sold by MotorGuide that may be used, but has been inspected and may have had minor repairs. Original retail purchaser of a "Service-Repair" motor is the first purchaser of the motor after it is denoted as "Service-Repair." "Service-Repair" motors have a blue sticker on the battery cable and box denoting "Manufacturer Certified Service-Repair Motor."
10. This warranty will not apply to: 1) haul-out, launch, towing and storage, transportation charges and/or travel time, telephone or rental charges of any type, inconvenience, or loss of time or income, or other consequential damages; or 2) removal or replacement of boat partitions or material because of boat design for necessary access to the Product; or 3) disconnection and reconnection of hard-wired trolling motors.
11. TERMINATION OF COVERAGE: Warranty coverage may be terminated for repossessed product, or product purchased at auction, from a salvage yard, from a liquidator, from an insurance company, from unauthorized marine dealers or boatbuilders, or other third party entities.

WARRANTY INFORMATION

12. ALL INCIDENTAL OR CONSEQUENTIAL DAMAGES ARE EXCLUDED FROM THIS WARRANTY, WARRANTIES OF MERCHANTABILITY AND FITNESS ARE EXCLUDED FROM THIS WARRANTY, IMPLIED WARRANTIES ARE LIMITED TO THE LIFE OF THIS WARRANTY. SOME STATES DO NOT ALLOW LIMITATIONS ON HOW LONG AN IMPLIED WARRANTY LASTS OR THE EXCLUSION OR LIMITATION OF INCIDENTAL OR CONSEQUENTIAL DAMAGES, SO THE ABOVE LIMITATIONS OR EXCLUSIONS MAY NOT APPLY TO YOU. THIS WARRANTY GIVES YOU SPECIFIC LEGAL RIGHTS, AND YOU MAY ALSO HAVE OTHER LEGAL RIGHTS WHICH MAY VARY FROM STATE TO STATE.

For Your Records:

☐ Model Number _____

☐ Serial Number _____

GENERAL INFORMATION AND COMPONENT IDENTIFICATION

Component Identification

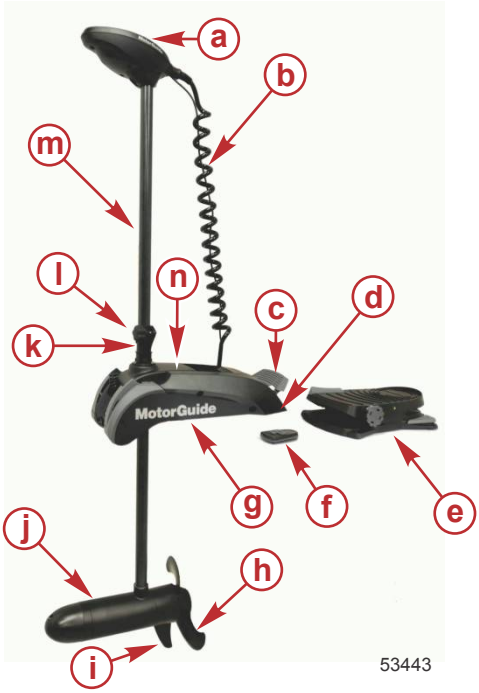

- **a -** Head
- **b -** Curly cable
- **c -** Stow/deploy release lever
- **d -** Battery cables (hidden)
- **e -** Wireless foot pedal
- **f -** Handheld wireless remote
- **g -** Deck mount
- **h -** Propeller
- **i -** Skeg
- **j -** Lower unit (motor)
- **k -** Depth collar
- **l -** Depth collar knob
- **m -** Composite column
- **n -** Steering transmission

GENERAL INFORMATION AND COMPONENT IDENTIFICATION

Recording the Serial Number

It is important to record the serial number and model number for future reference. The serial number tags are located on the trolling motor as shown. Record the serial number and the model number in the space provided in the **Warranty Information** section of this manual.

a - Model identification number
b - Serial number

Product Registration

For warranty purposes, please register your MotorGuide trolling motor by completing the enclosed warranty card or by visiting **www.motorguide.com**.

GENERAL INFORMATION AND COMPONENT IDENTIFICATION

Boater's Responsibilities

The operator (driver) is responsible for the correct and safe operation of the boat and safety of its occupants and general public. It is strongly recommended that each operator (driver) read and understand this entire manual before operating the trolling motor.

Be sure at least one additional person on board is instructed in the basic operation of the trolling motor in case the driver is unable to operate the boat.

Protecting People in the Water

WHILE YOU ARE TROLLING

It is difficult for a person in the water to take quick action to avoid a boat heading in their direction, even at slow speeds.

Always slow down and exercise extreme caution any time you are boating in an area where there might be people in the water.

WHILE THE BOAT IS STATIONARY

⚠ WARNING
A spinning propeller, a moving boat, or any solid device attached to the boat can cause serious injury or death to swimmers. Stop the trolling motor immediately whenever anyone in the water is near your boat.

Shut off the trolling motor before allowing people to swim or be in the water near your boat.

Passenger Safety Message

Whenever the boat is in motion, observe the location of all passengers. A sudden reduction in boat speed, such as a sharp change of boat direction, could throw them off the boat.

Safe Boating Suggestions

In order to safely enjoy the waterways, familiarize yourself with local and other governmental boating regulations and restrictions, and consider the following suggestions.

Use flotation devices. It is the law to have an approved personal flotation device of suitable size for each person aboard and have it readily accessible.

GENERAL INFORMATION AND COMPONENT IDENTIFICATION

Do not overload your boat. Most boats are rated and certified for maximum load (weight) capacities, refer to your boat capacity plate. If in doubt, contact your dealer or the boat's manufacturer.

Perform safety checks and required maintenance. Follow a regular schedule and ensure all repairs are made properly.

Never be under the influence of alcohol or drugs while boating (it is the law). Alcohol or drug use impairs your judgment and greatly reduces your ability to react quickly.

Passenger boarding. Stop the trolling motor whenever passengers are boarding or unloading.

Be alert. The operator of the boat is responsible by law to maintain a proper lookout by sight and hearing. The operator must have an unobstructed view particularly to the front. No passengers, load, or fishing seats should block the operators view when operating the boat.

Underwater hazards. Reduce speed and proceed with caution whenever navigating in shallow water.

Tripping hazards. To avoid a trip hazard, route all cables and wiring neatly and out of the way.

Report accidents. Boat operators are required by law to file a Boating Accident Report with their state boating law enforcement agency when their boat is involved in certain boating accidents. A boating accident must be reported if 1) there is loss of life or probable loss of life, 2) there is personal injury requiring medical treatment beyond first aid, 3) there is damage to boats or other property where the damage value exceeds $500.00 or 4) there is complete loss of the boat. Seek further assistance from local law enforcement.

PRODUCT INSTALLATION, WIRING, AND BATTERY INFORMATION

Installing the Trolling Motor

1. Remove the two side panel screws from each side of the deck mount. Gently pull the side panels away from the deck mount, taking care not to damage the locating tabs, and remove the side panels from both sides of the trolling motor.

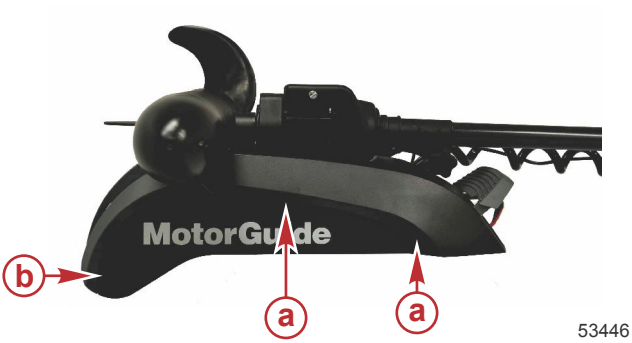

a - Side panel screws
b - Locating tab

2. If you are replacing an existing MotorGuide or competitive brand trolling motor on your current boat, check if the existing mounting holes align with the new deck mount before drilling new holes. Ensure that the mounting location meets the requirements listed in **Step 4**.
3. If new holes are not required to mount the trolling motor, skip ahead to **Step 7**.
4. Carefully select an appropriate area on the deck of the boat close to the centerline to install the trolling motor. Ensure that the forward mounting bolts will not penetrate the hull. Have an assistant hold the trolling motor in position while the mounting location is being selected.

IMPORTANT: The mounting position must be tested in the stowed and deployed positions before drilling the mounting holes.

IMPORTANT: Choose an area on the deck with 10.2 cm (4.0 in.) of clearance between the bow of the boat and the deck mount to prevent interference between the trolling motor and the bow roller when loading or unloading on a steep ramp.

IMPORTANT: Ensure that the head does not protrude beyond the beam of the boat when in the stowed position.

IMPORTANT: A minimum clearance of 13 mm (0.5 in.) is required between the motor column and the rub rail on the boat when the trolling motor is deployed.

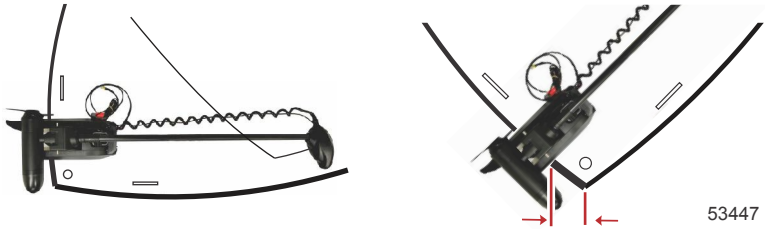

Mounting position with 10.2 cm (4.0 in.) clearance from the bow

5. Place the trolling motor onto the deck of the boat at the selected location in the stowed position. Use the deck mounting bracket as a template and mark the location of the mounting holes.

IMPORTANT: Four mounting holes (two on each side) are required to securely mount the trolling motor. There are seven mounting hole positions to choose from on each side of the deck mounting bracket. Choose two hole positions on each side that work the best with your boat configuration.

IMPORTANT: Select mounting hole locations as far apart as practical on each side of the deck mounting bracket for the most secure mounting.

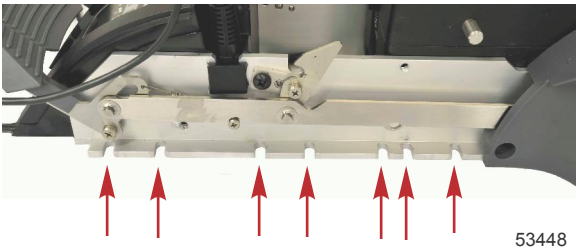

Mounting hole locations—same on both sides

6. Drill the mounting holes with a 8 mm (5/16 in.) drill bit. Remove any debris.

IMPORTANT: To help prevent cracking on fiberglass decks, use a countersink bit or a larger drill bit to countersink the mounting holes.

7. Align the deck mounting bracket to the holes in the deck. On fiberglass boats with no carpet where the motor is being installed, install the rubber isolators between the boat deck and the deck mounting bracket. Install three stainless steel mounting bolts through the mounting holes on one side of the deck mounting bracket. Install a washer and a nylock nut onto each bolt, but do not tighten them at this time.

PRODUCT INSTALLATION, WIRING, AND BATTERY INFORMATION

NOTE: *If the trolling motor is being mounted to a carpeted boat deck, the rubber isolators are not required.*

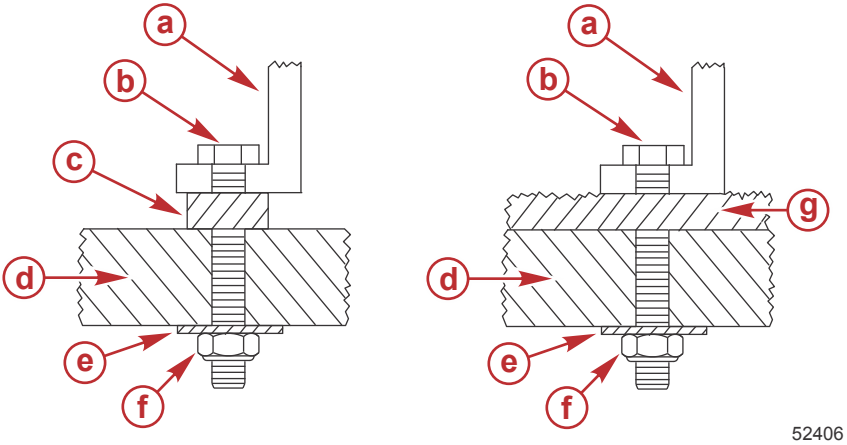

a - Deck mounting bracket
b - Mounting bolt
c - Rubber isolator
d - Deck
e - Washer
f - Nylock nut
g - Carpet

8. Grab onto the motor column and raise the unbolted side of the deck mounting bracket. Install the bolts through the deck mounting holes while holding the deck mounting bracket at an angle. Holding the deck mounting bracket at an angle allows the bolts to be installed with less interference from the foot release mechanism. Install a washer and a nylock nut onto each bolt.

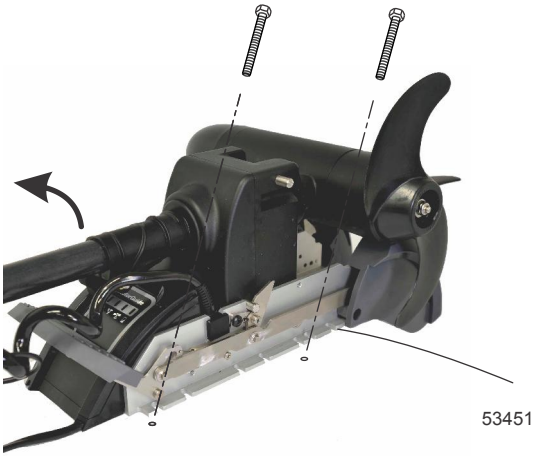

9. Align the trolling motor with the mounting holes in the deck. Hold the mounting bolts securely with a 7/16 in. wrench while using a wrench or socket to tighten the nylock nuts on both sides of the deck mounting bracket from under the deck.
10. Install the side panels onto the trolling motor, taking care not to damage the locating tabs. Install the side panel screws.

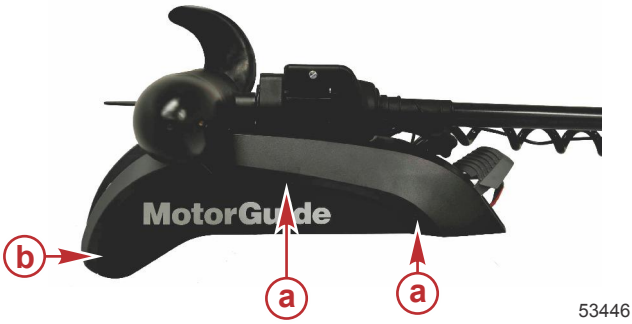

a - Side panel screws
b - Locating tab

PRODUCT INSTALLATION, WIRING, AND BATTERY INFORMATION

Recommended Practice and Procedures

IMPORTANT: Unplug the trolling motor after each use and when charging the battery.

- Do not use the main engine battery to power the trolling motor.
- Ensure that the batteries are enclosed within a battery box to prevent accidental shorting of the battery terminals.
- Route the trolling motor wires on the opposite side of the boat from other boat wiring.
- Connect boat accessories directly to the main engine battery.
- Do not charge the trolling motor batteries while the trolling motor is in the deployed (down) position.

Battery Recommendations

- Use 12-volt, deep cycle marine batteries. The number of batteries required varies according to the model of your trolling motor. Refer to **Battery Connection**.
- As a general rule, deep cycle batteries with a higher amp-hour rating or reserve capacity rating will provide longer run times and better performance.
- Install a manual reset circuit breaker in line with the trolling motor positive leads within 180 cm (72 in.) of the batteries. These can be purchased from your local MotorGuide retailer or from www.motorguide.com.
- Do not extend the included 10-gauge battery cables more than 1.8 m (6 ft) for a total of 3 m (10 ft). If longer battery cables are required, MotorGuide offers accessory 8 mm² (8-gauge) battery cables.
- Use nylock nuts to secure the battery cables to their terminals. Using wing nuts to secure the battery cables can cause loose connections.
- Any depth sounders or fish finders must be powered from the engine starting battery. Connecting electronic equipment to the trolling motor batteries can cause electrical interference and possible electrolysis.

Recommended MotorGuide Accessory Description	Part Number
8-gauge battery cable and terminals with 50-amp manual reset circuit breaker	MM309922T
50-amp manual reset circuit breaker	MM5870
60-amp manual reset circuit breaker	8M0064076

PRODUCT INSTALLATION, WIRING, AND BATTERY INFORMATION

Battery Precautions

⚠ WARNING

An operating or charging battery produces gas that can ignite and explode, spraying out sulfuric acid, which can cause severe burns. Ventilate the area around the battery and wear protective equipment when handling or servicing batteries.

When charging batteries, an explosive gas mixture forms in each cell. Part of this gas escapes through holes in the vent plugs and may form an explosive atmosphere around the battery if ventilation is poor. This explosive gas may remain in or around the battery for several hours after it has been charged. Sparks or flames can ignite this gas and cause an internal explosion, which may shatter the battery.

The following precautions should be observed to prevent an explosion:

1. Do not smoke near batteries being charged or which have been charged recently.
2. Do not break live circuits at the battery terminals, because a spark usually occurs at the point where a live circuit is broken. Always be careful when connecting or disconnecting cable clamps on chargers. Poor connections are a common cause of electrical arcs, which cause explosions.
3. Do not reverse the polarity of battery terminal to cable connections.

Establishing a Common Ground

A common ground (–) connection increases sonar sensitivity, improves sonar display, avoids the ground circuit as a possible source of corrosion or electrolysis, and reduces interference with other electronic equipment. For 12-volt trolling motor applications, connect the negative (–) terminal on the trolling motor battery to the negative (–) terminal on the engine starting battery with a common ground cable to establish a common ground.

For 24-volt and 36-volt trolling motors, a common ground (–) connection cannot be established with the 12-volt electrical system in the boat due to the different circuit voltages. As a general rule to reduce interference with other electronics on your boat, route all battery wiring away from other boat wiring (opposite side of the boat if possible), keep the battery cable length as short as possible, and always use battery cables of the appropriate size (gauge).

ELECTROLYSIS

Using the main engine battery as a power source for the trolling motor may cause electrolysis on metallic parts. If the motor and battery wiring are installed correctly and electrolysis issues continue, separate the trolling motor from any other boat electronics. Using the main engine battery as a power source for the trolling motor is not recommended. Refer to **Battery Connection** for correct installation.

PRODUCT INSTALLATION, WIRING, AND BATTERY INFORMATION

Wire Color Code Abbreviations

Wire Color Abbreviations				
BLK	Black		BLU	Blue
BRN	Brown		GRY	Gray
GRN	Green		ORN or ORG	Orange
PNK	Pink		PPL or PUR	Purple
RED	Red		TAN	Tan
WHT	White		YEL	Yellow
LT or LIT	Light		DK or DRK	Dark

Battery Connection

⚠ WARNING

Before working around electrical system components, disconnect the battery cables from the battery to prevent injury or damage to the electrical system due to an accidental short circuit.

⚠ CAUTION

Disconnecting or connecting the battery cables in the incorrect order can cause injury from electrical shock or can damage the electrical system. Always disconnect the negative (-) battery cable first and connect it last.

NOTICE

Failure to operate the trolling motor within the recommended voltage specifications can cause product damage. Do not exceed the maximum supply voltage.

IMPORTANT: Refer to the decal on the head of the trolling motor to determine the voltage requirements of your trolling motor.

12-VOLT BATTERY CONNECTION

1. Starting with the negative (–) lead, disconnect the battery cables from the engine starting battery.
2. Install a 50-amp (good) or 60-amp (best) manual reset circuit breaker in line with the trolling motor power cable positive (+) lead and the trolling motor battery positive (+) terminal.
3. Connect the positive (+) trolling motor lead to the positive (+) trolling motor battery terminal.
4. Connect the negative (–) trolling motor lead to the negative (–) trolling motor battery terminal.
5. Connect a jumper cable (common ground bond) from the trolling motor battery negative (–) terminal to the engine battery negative (–) terminal.

NOTE: *Vessels using 12-volt trolling motors with multiple batteries must have a common ground bonding circuit. Not establishing a common ground between the vessel batteries may cause severe corrosion, electrolysis, or electrical shock.*

NOTE: *The common ground bond cable should be no more than one wire size (gauge) smaller than the battery cables, nor smaller than 16-gauge (AWG). The common ground bond cable must be insulated, and secured to the negative (–) battery terminals with ring-style connectors.*

6. Starting with the positive (+) lead, reconnect the battery cables to the engine starting battery.

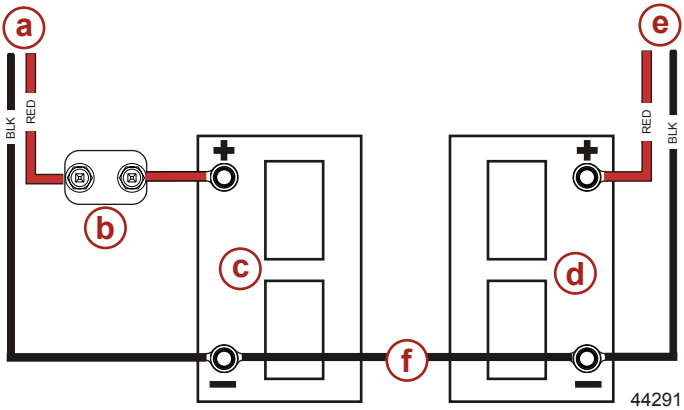

12-volt battery connection with common ground bond

- **a -** Power cables to trolling motor
- **b -** Manual reset circuit breaker
- **c -** Trolling motor battery
- **d -** Engine starting battery
- **e -** Power cables to engine
- **f -** Common ground (–) bond cable

24-VOLT BATTERY CONNECTION

1. Starting with the negative (–) lead, disconnect the battery cables from the engine starting battery.
2. Install a 50-amp (good) or 60-amp (best) manual reset circuit breaker in line with the trolling motor power cable positive (+) lead and the trolling motor battery **B** positive (+) terminal.
3. Connect the positive (+) trolling motor lead to the positive (+) terminal on trolling motor battery **B**.
4. Connect a jumper wire (reference gray) between the negative (–) terminal on battery **B** to the positive (+) terminal on battery **A**.

IMPORTANT: The jumper wire should be the same wire gauge as the negative (–) and positive (+) power cables.

5. Connect the trolling motor negative (–) lead to the negative (–) terminal on battery **A**.
6. Starting with the positive (+) lead, reconnect the battery cables to the engine starting battery.

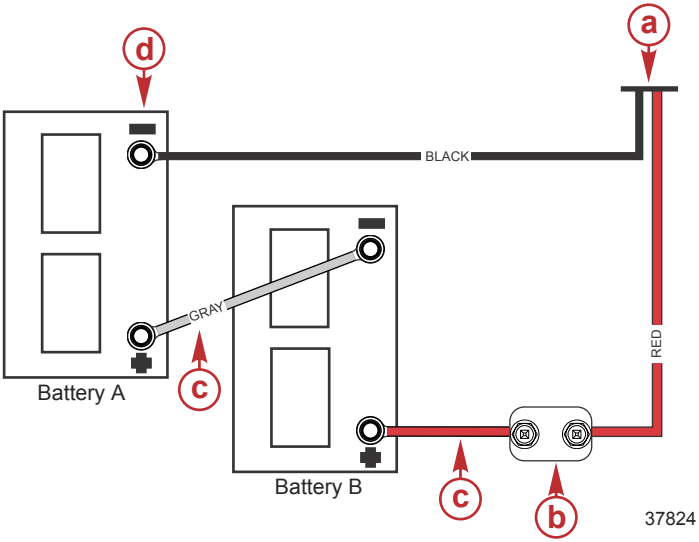

24-volt battery connection

a - Power cables to trolling motor
b - Manual reset circuit breaker
c - Jumper wire (not supplied)
d - Negative (–) battery terminal

IMPORTANT: Do not connect a common ground bond cable between 24-volt and 12-volt electrical circuits.

36-VOLT BATTERY CONNECTION

1. Starting with the negative (–) lead, disconnect the battery cables from the engine starting battery.
2. Install a 50-amp (good) or 60-amp (best) manual reset circuit breaker in line with the trolling motor power cable positive (+) lead and the trolling motor battery **C** positive (+) terminal.
3. Connect the positive (+) trolling motor lead to the positive (+) terminal on trolling motor battery **C**.
4. Connect a jumper wire (reference gray) between the negative (–) terminal on battery **C** to the positive (+) terminal on battery **B**.

PRODUCT INSTALLATION, WIRING, AND BATTERY INFORMATION

IMPORTANT: The jumper wire should be the same wire gauge as the negative (–) and positive (+) power cables.

5. Connect a jumper wire (reference gray) between the negative (–) terminal on battery **B** to the positive (+) terminal on battery **A**.
6. Connect the trolling motor negative (–) lead to the negative (–) terminal on battery **A**.
7. Starting with the positive (+) lead, reconnect the battery cables to the engine starting battery.

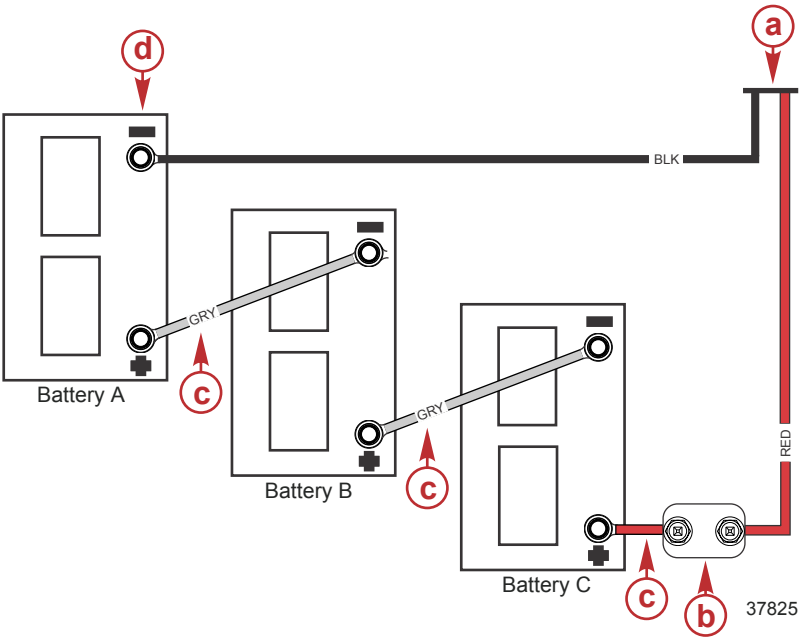

36-volt battery connection

- **a -** Power cables to trolling motor
- **b -** Manual reset circuit breaker
- **c -** Jumper wire (not supplied)
- **d -** Negative (–) battery terminal

IMPORTANT: Do not connect a common ground bond cable between 36-volt and 12-volt electrical circuits.

PRODUCT INSTALLATION, WIRING, AND BATTERY INFORMATION

Activating the Wireless Foot Pedal

Each wireless foot pedal and wireless handheld remote has a unique serial number, and each wireless controller must be synced individually to the trolling motor receiver. The trolling motor receiver can sync up to 40 wireless controllers. This ensures that the trolling motor will respond to commands only from designated controllers. Follow the instructions below to activate a wireless controller with your trolling motor. For erasing and reprogramming information, refer to **Foot Pedal and Handheld Remote Reprogramming and Battery Replacement**.

IMPORTANT: To activate multiple foot pedals or remotes, the motor must be unplugged from the power source and then plugged back into the power source between activating each control device.

1. Install the batteries into the wireless foot pedal. Refer to **Foot Pedal and Handheld Remote Reprogramming and Battery Replacement**.
2. Connect the battery cables to the battery, or plug in the battery cable to a power source. Within ten seconds of connecting the battery cables to their terminals, press and hold the **propeller** and **anchor** buttons on the wireless foot pedal simultaneously.
3. Listen for a multitone beep, indicating that the receiver has synced the electronic serial number.

a - **Anchor** button (foot pedal on/off)

b - **Propeller** button (propeller on/off)

4. To turn the pedal on or off, press and hold the **anchor** button. One beep from the foot pedal indicates that the foot pedal is turned on, two beeps indicate that the foot pedal is turned off.

Activating the Handheld Remote

1. If the trolling motor battery cables are connected, disconnect the battery cables from the trolling motor battery, starting with the negative (–) lead.

2. Connect the battery cables to the battery or plug in the battery cable to a power source. Within ten seconds of connecting the battery cables to their terminals, press and hold the **left arrow** button and **right arrow** button on the handheld remote simultaneously.
3. Listen for a multitone beep, which indicates that the receiver has stored the electronic serial number.

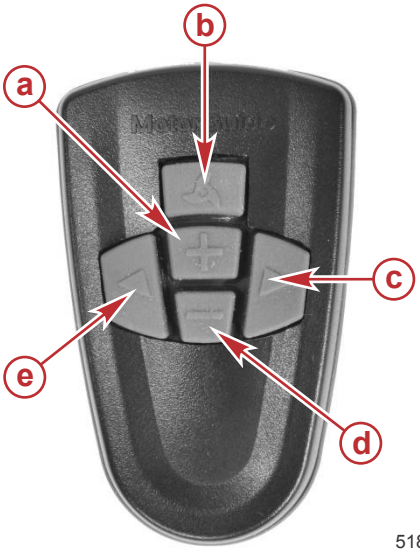

a - **+** button—increase speed

b - **Propeller** button—propeller on/off

c - **Right arrow** button—steer right

d - **–** button—decrease speed

e - **Left arrow** button—steer left

Connecting the Sonar Display to the Trolling Motor

NOTE: *This procedure applies only to models equipped with integrated sonar.*

This sonar display connection procedure applies to trolling motor models with internal sonar that offer built-in 200/83 kHz sonar transducers compatible with Eagle, Garmin, Humminbird, Lowrance, and Vexilar brand sonar displays. For compatibility with other sonar units, refer to www.motorguide.com.

PRODUCT INSTALLATION, WIRING, AND BATTERY INFORMATION

The trolling motor is equipped with a Lowrance 7-pin plug. Adapters are available to connect other brands of sonar displays to the trolling motor. Match the cable connector to the sonar port on the back of the sonar display. Power up the unit to ensure that the sonar cable is connected securely.

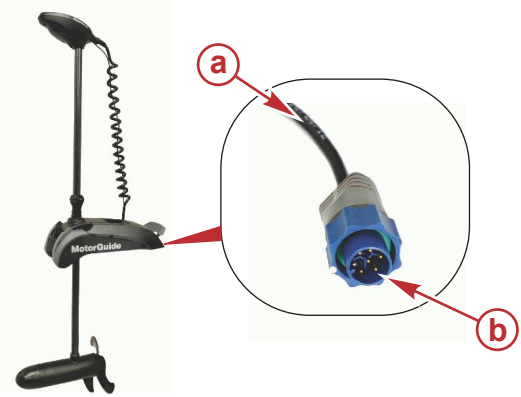

53441

a - Harness—to nose cone sonar

b - Lowrance 7-pin plug —to sonar display

Transducer adapter cables available from MotorGuide	Part Number
Lowrance 7-to-6-pin adapter	8M4001959
Vexilar 3-pin adapter	8M4001960
Garmin 6-pin adapter	8M4001961
Humminbird 7-pin adapter	8M4001962

TROLLING MOTOR OPERATION

Status Indicator Light Identification

This trolling motor is equipped with a multifunction status indicator light panel. It can display the status of the motor, propeller, battery charge, and GPS status for quick and easy reference during operation.

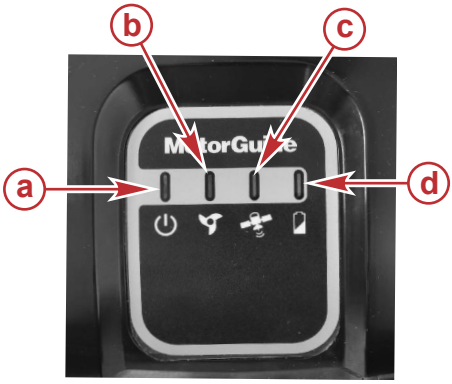

51836

- **a -** Power on/off indicator light
- **b -** Propeller on/off indicator light
- **c -** GPS navigation indicator light
- **d -** Battery status light

Stowing and Deploying the Trolling Motor

⚠ WARNING

Rotating propellers can cause serious injury or death. Never start or operate the motor out of water.

⚠ CAUTION

Moving parts, such as hinges and pivot points, can cause serious injury. Keep away from moving parts when stowing, deploying, or tilting the motor.

TROLLING MOTOR OPERATION

STOWING THE TROLLING MOTOR

1. Press down on the stow/deploy release lever with one hand or one foot. Firmly grasp the column with one hand and tilt the trolling motor towards the mount.

2. Raise the motor out of the water and rotate the column so the lower unit is aligned with the mount cradle. Orient the lower unit so the cable does not wrap around the trolling motor column. Slide the lower unit into the mount cradle and release the stow/deploy release lever. The mount will lock the trolling motor in the stowed position.

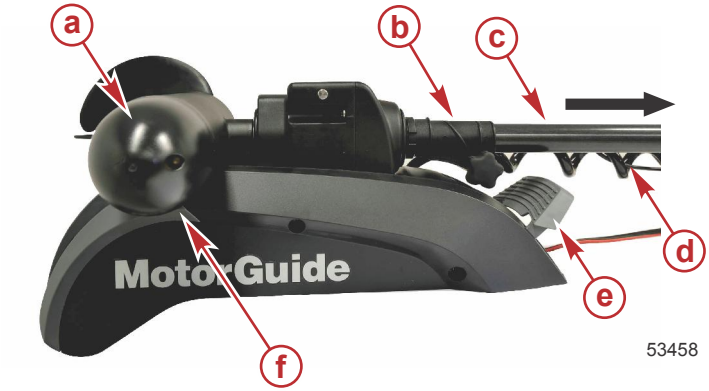

a - Lower unit (motor)
b - Depth collar
c - Column
d - Curly cable
e - Stow/deploy release lever
f - Mount cradle

3. Slide the depth collar tightly against the steering transmission. Rotate the depth collar until it engages the steering transmission, then tighten the depth collar knob.

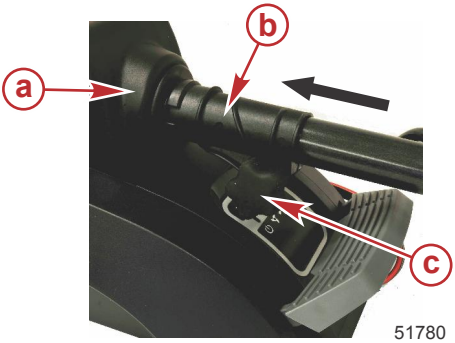

a - Steering transmission
b - Depth collar
c - Depth collar knob

NOTE: *Optional mounts are available for supporting the trolling motor in extremely rough boating conditions.*

TROLLING MOTOR OPERATION

Recommended MotorGuide Accessory Description	Part Number
Standard Ram® mount stabilizer	8M4000977
Long Ram® mount stabilizer	8M4000978

DEPLOYING THE TROLLING MOTOR

1. Loosen the depth collar knob, then slide the depth collar away from the steering transmission. Tighten the depth collar knob.
2. Press down on the stow/deploy release lever with one hand or one foot. Firmly grasp the column and slide the lower unit away from the mount cradle.

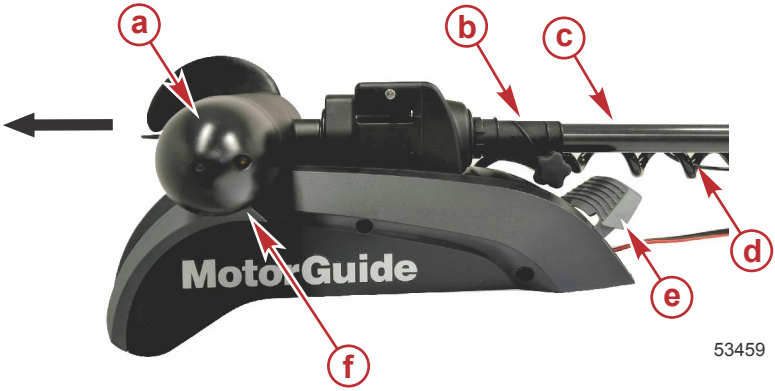

a - Lower unit (motor)
b - Depth collar
c - Column
d - Curly cable
e - Stow/deploy release lever
f - Mount cradle

3. Tilt the motor out of the stowed position and lower the trolling motor until the depth collar rests on top of the steering housing collar. Rotate the trolling motor so the depth collar locks into position on the steering housing collar and release the stow/deploy release lever. The motor will lock into the deployed position. Pull back on the motor to ensure that it is securely locked into the deployed position.

a - Depth collar knob

Adjusting the Motor Depth

⚠ CAUTION
Avoid injury due to the sudden shifting of weight when deploying the motor or adjusting the motor depth. When raising or lowering the motor, firmly grasp the motor column with one hand before loosening the depth collar knob.

Adjust the depth of the motor to improve the trolling motor performance in various water depths.

IMPORTANT: When adjusting the motor depth, ensure that the lower unit is fully submerged a minimum of 30 cm (12 in.) to avoid propeller cavitation.

TROLLING MOTOR OPERATION

1. Firmly grasp the column with one hand while loosening the depth collar knob so the column moves freely.

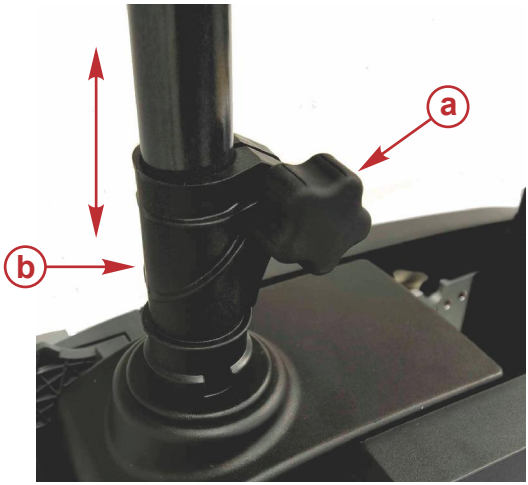

53461

a - Depth collar knob
b - Depth collar

2. Raise or lower the column to the desired depth. Tighten the depth collar knob to secure the column.

Foot Pedal Operation

⚠ WARNING

Rotating propellers can cause serious injury or death. Never start or operate the motor out of water.

⚠ WARNING

Avoid possible serious injury from unexpected acceleration and boat movement when activating the trolling motor. When using the foot-pedal, the motor will start up at the last selected speed and course settings. Before pressing the foot-pedal, hold on to a seat or handhold, and advise passengers to do the same.

TROLLING MOTOR OPERATION

To operate the trolling motor using the foot pedal, sync the foot pedal to the trolling motor receiver. Refer to **Activating the Wireless Foot Pedal** in the **Product Installation, Wiring, and Battery Information** section of this manual.

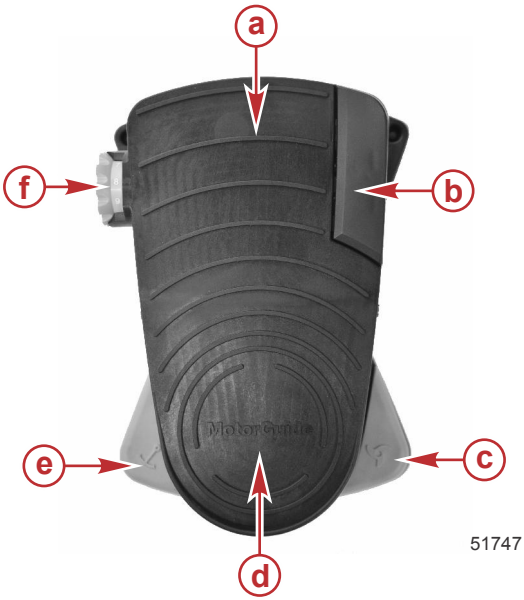

a - Toe-down position—right turn

b - Propeller momentary on/off

c - Propeller constant on/off

d - Heel-down position—left turn

e - Anchor button—models with GPS installed; also foot pedal on/off

f - Speed control dial

TURNING THE FOOT PEDAL ON OR OFF

Press and hold the **anchor** button. One short beep from the foot pedal indicates that the foot pedal is turned on; two short beeps indicate that the foot pedal is turned off.

TROLLING MOTOR OPERATION

DIRECTION CONTROL

Pivot the foot pedal toe-down to steer right, or heel-down to steer left. To stop turning, allow the pedal to return to its center detent position without pressing down on the heel or toe of the pedal. To operate the motor in reverse, continue to press the foot pedal down in either direction until the head is pointing to the desired direction of travel. The available steering range will allow the operator to steer the trolling motor past 360° in either direction.

a - Toe-down position—right turn
b - Center detent position—steering off
c - Heel-down position—left turn

SPEED CONTROL

⚠ WARNING

Avoid possible serious injury from unexpected acceleration and boat movement when activating the trolling motor. When using the foot-pedal, the motor will start up at the last selected speed and course settings. Before pressing the foot-pedal, hold on to a seat or handhold, and advise passengers to do the same.

TROLLING MOTOR OPERATION

Control the speed of the trolling motor by adjusting the speed control dial on the foot pedal. Rotate the dial forward to increase motor speed, and rotate it backward to reduce speed. Press and hold the **momentary** button to operate the motor at the selected speed. Release the **momentary** button to stop the motor. Press the **propeller constant on/off** button once to run the motor at the selected speed. Press the button again to turn the motor off. The motor speed can be adjusted while the motor is running.

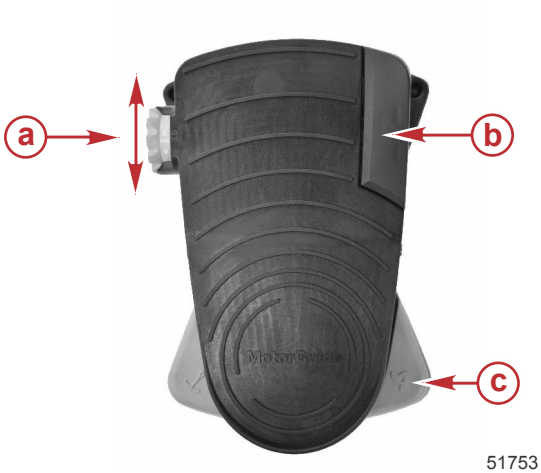

a - Speed control dial—rotate forward to increase speed

b - Momentary button

c - Propeller constant on/off button

TROLLING MOTOR OPERATION

Handheld Remote Operation

⚠ WARNING
Rotating propellers can cause serious injury or death. Never start or operate the motor out of water.

To operate the trolling motor using the handheld remote, sync the foot pedal to the trolling motor receiver. Refer to **Activating the Handheld Remote** in the **Product Installation, Wiring, and Battery Information** section of this manual.

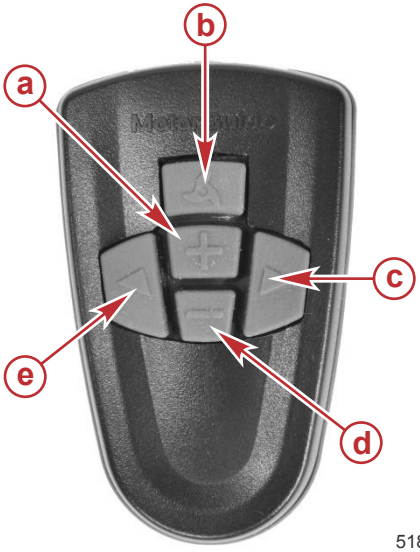

a - Increase speed
b - Propeller on/off
c - Right turn
d - Decrease speed
e - Left turn

TURNING THE HANDHELD REMOTE ON OR OFF

The handheld remote is always on, and is ready for use anytime that the trolling motor is powered up and in the deployed position.

STEERING

- To turn left, press the **left turn** button on the handheld remote.
- To turn right, press the **right turn** button on the handheld remote.
- The available steering range allows the trolling motor to turn beyond 360° for operation in reverse.

SPEED CONTROL

- Press the **propeller on/off** button once to start the propeller, and press the **propeller on/off** button again to stop the propeller.

TROLLING MOTOR OPERATION

- The system is equipped with 20 speed levels. Press the **increase speed (+)** button to increase motor speed by one level, and press the **decrease speed (–)** button to reduce motor speed by one level.
- Holding the **increase speed (+)** or **decrease speed (–)** will cause the speed level to increase or decrease until the speed level limit is reached. Holding the **increase speed (+)** or **decrease speed (–)** button for 2.5 seconds will ramp up the speed level from 0% to 100%, or decrease from 100% to 0%, respectively. The trolling motor will emit two beeps when it reaches the 100% or 0% speed level.

MAINTENANCE AND STORAGE

Trolling Motor Care

To keep your trolling motor in the best operating condition and retain its dependability, your trolling motor must receive periodic inspections and maintenance. Keep it maintained properly to ensure the safety of you and your passengers.

⚠ WARNING

Neglecting to inspect, maintain, or repair your trolling motor can result in product damage or serious injury or death. Do not perform maintenance or service on your trolling motor if you are not familiar with the correct service and safety procedures.

Record all maintenance performed and save maintenance work orders and receipts.

SELECTING REPLACEMENT PARTS

Use only original MotorGuide replacement parts.

Inspection and Maintenance Schedule

BEFORE EACH USE

- Inspect for loose or corroded wiring connections.
- Check the tightness of the battery cable connections. Nylock nuts are recommended for securing the battery cables to their terminals.
- Check the tightness of the propeller nut.
- Check the propeller blades for damage.
- Check the tightness of the mount to the deck of the boat.

AFTER EACH USE

- Disconnect the battery cables from the power source or unplug the motor from the boat.
- Check each side of the propeller and propeller shaft for debris such as weeds and fishing line. Remove all debris.
- Check the tightness of the propeller nut.
- Wash the trolling motor with clean water and a mild soap such as Attwood® Premium Boat Wash to remove dirt and dust that may scratch the surface.

IMPORTANT: Do not use harsh cleaners such as bleach or citrus cleaners to clean the trolling motor. These cleaners can damage the finish on the trolling motor.

IMPORTANT: Do not power wash the trolling motor.

EVERY 100 HOURS OF USE OR ANNUALLY (WHICHEVER OCCURS FIRST)

1. Apply 2-4-C with PTFE to the depth collar knob screw threads.

NOTE: *2-4-C with PTFE is a marine grease available at marine supply stores and your MotorGuide dealer.*

Tube Ref No.	Description	Where Used	Part No.
95	2-4-C with PTFE	Depth collar knob screw threads	92-802859A 1

2. Remove the side panels by removing the two screws on each side of the mount. Gently pull the cover away from the mount and towards the foot release lever.

a - Depth collar knob screw threads
b - Screws securing the side panel

3. Apply 2-4-C with PTFE to the slot on the foot release lever linkage on each side of the deck mount. Press the foot release lever and apply more 2-4-C with PTFE to the slot, equally distributing the grease along the length of the slot.

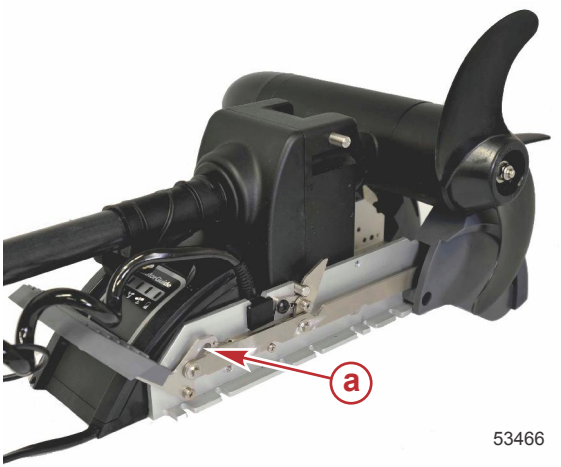

a - Slot

IMPORTANT: Never use an aerosol lubricant or solvent-based lubricant to grease or oil any part of the trolling motor. Many aerosol lubricants contain harmful propellants that can cause damage to various parts of the trolling motor.

Tube Ref No.	Description	Where Used	Part No.
95	2-4-C with PTFE	Slot on the foot release lever linkage	92-802859A 1

4. Install the side panels onto the deck mount and tighten the screws.
5. Check the tightness of the mounting screws, nuts, and other fasteners.
6. Inspect the battery. Refer to **Battery Inspection**.

Storage Preparation

The major consideration in preparing your trolling motor for storage is to protect it from corrosion and damage caused by freezing of trapped water. It is also recommended that batteries are disconnected prior to storage and that the batteries are stored indoors in a dry location during long-term storage. The batteries should also be removed from the handheld remote and wireless foot pedal for long-term storage.

MAINTENANCE AND STORAGE

Refer to the **Inspection and Maintenance Schedule** and complete the appropriate care instructions to prepare your trolling motor for storage. Store the trolling motor in a dry location where it will not be affected by temperatures below –29 °C (–20 °F).

IMPORTANT: Trolling motors stored in temperatures below 0 °C (32 °F) should be operated slowly for a minimum of 15 minutes before going above 30% throttle.

Battery Inspection

The battery should be inspected at periodic intervals to ensure proper trolling motor operation.

IMPORTANT: Read the safety and maintenance instructions that accompany your battery.

1. Ensure that the battery is secured to the vessel.
2. Ensure that the battery cable terminals are clean, tight, and correctly installed. For installation instructions, refer to **Battery Connection** in the **Product Installation, Wiring, and Battery Information** section of this manual.
3. Ensure that the battery is equipped with a battery box to prevent accidental shorting of the battery terminals.

Propeller Replacement

⚠ WARNING
Performing service or maintenance without first disconnecting the battery can cause product damage, personal injury, or death due to fire, explosion, electrical shock, or unexpected motor starting. Always disconnect the battery cables from the battery before maintaining, servicing, installing, or removing motor components.

REMOVING THE PROPELLER

1. Disconnect the power cables from the battery.
2. While holding the propeller blade with one gloved hand, use a 9/16 in. wrench or a ratchet and a 9/16 in. socket to remove the propeller nut. Remove the propeller nut and washer (or anode, for saltwater models).

IMPORTANT: Remove the propeller nut with a wrench or a ratchet and socket. Using another tool may damage the propeller nut or shaft. If the propeller cannot be removed easily, use a rubber mallet to lightly tap the back side of the opposite blade. If the propeller cannot be removed, have the propeller removed by an authorized dealer.

NOTE: *If the propeller pin is bent, replace the propeller pin.*

INSTALLING THE PROPELLER

1. Rotate the motor shaft to insert the propeller pin horizontally.

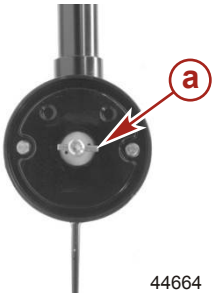

a - Propeller pin

2. Install the propeller onto the motor shaft by engaging the propeller onto the propeller pin.

3. Install the washer (or anode, for saltwater models) onto the propeller shaft then install the propeller nut. Tighten the propeller nut securely.

4. Tighten the propeller nut another ¼ turn.

OWNER SERVICE ASSISTANCE

Troubleshooting

NOTE: *For service information, contact any certified MotorGuide service center. For a full listing of MotorGuide service centers, go to www.motorguide.com or contact any Mercury Marine service office.*

Symptom	Possible Cause	Resolution
Trolling motor does not respond to wireless commands	Weak trolling motor batteries	Check the battery charge indicator on the trolling motor. Recharge or replace batteries as required.
	Weak handheld remote battery or weak foot pedal battery	Replace the handheld remote battery (one AAA-size) or foot pedal batteries (two AA-size).
	Wireless controllers not synced	Refer to **Activating the Wireless Foot Pedal** or **Activating the Handheld Remote**.
Loss of power	Weak trolling motor batteries	Check the battery charge indicator on the trolling motor. Recharge or replace the batteries as required.
	Loose or corroded battery connections	Inspect battery connections for cleanliness and tightness.
	Propeller is loose, damaged, or off-balance	Refer to **Propeller Replacement**.
	Wiring or electrical connection faulty	Wire gauge from the battery to the trolling motor is insufficient. 6-gauge wire is recommended.
	Magnets cracked or chipped	The motor will whine or grind. Contact a Service Center.
	Water intrusion in the lower unit	Contact a Service Center.

OWNER SERVICE ASSISTANCE

Symptom	Possible Cause	Resolution
Excessive noise or vibration	Propeller is loose, damaged, or off-balance	Refer to **Propeller Replacement**.
	Damaged bearings or bushings	Contact a Service Center.
	Magnets interfering with armature	Turn off the power and manually rotate the propeller. If the propeller does not rotate freely with a slight magnetic drag, contact a Service Center.
	Magnets cracked or chipped	The motor will whine or grind. Contact a Service Center.
Motor failure (motor runs at partial speed)	Loose electrical connections	Connections in the head may be loose or damaged. Contact a Service Center.
	Thermal protection is overloaded	Temperature exceeds specification. Contact a Service Center.
	Propeller is loose, damaged, or off-balance	Refer to **Propeller Replacement**.
Trolling motor flashes the propeller LED and battery LED while emitting a siren noise	Internal electronics fault	Disconnect battery power. Contact a Service Center.

OWNER SERVICE ASSISTANCE

Symptom	Possible Cause	Resolution
Motor failure (motor does not run)	Weak trolling motor batteries	Check the battery charge indicator on the trolling motor. Recharge or replace the battery as required.
	Loose or corroded battery connections	Inspect battery connections for cleanliness and tightness.
	Wiring or electrical connection faulty	Wire gauge from the battery to the trolling motor is insufficient. 6-gauge wire is recommended.
	Loose electrical connections	Inspect connections for cleanliness and tightness.
	Thermal protection is overloaded	Disconnect the trolling motor batteries and check for weeds or debris around the propeller.
		Temperature exceeds specification. Contact a Service Center.
	Fuse or circuit breaker is open	Replace the fuse or reset the circuit breaker only after determining the root cause of the problem.
	Magnets interfering with armature	Turn off the power and manually rotate the propeller. If the propeller does not rotate freely with a slight magnetic drag, contact a Service Center.
	Boat wiring faulty	Contact a Service Center.
Inaccurate temperature reading (models with internal sonar)	Lower unit not fully submerged	Adjust the depth of the motor. Ensure the lower unit is fully submerged. Refer to **Adjusting the Motor Depth**.
	Damaged nose cone	Contact a Service Center.
	Damaged sonar cable	Contact a Service Center.
Motor is difficult to deploy or return to stowed position	Sticking latch mechanism	Lubricate the latch mechanism. Refer to **Inspection and Maintenance Schedule**.

Symptom	Possible Cause	Resolution
Difficulty removing propeller	Bent propeller pin	Hold one blade and lightly tap the opposite blade with a rubber mallet.
		Use a putty knife on both sides of the propeller to apply equal pressure.
	Bent armature shaft	Contact a Service Center.

Troubleshooting the Foot Pedal and Handheld Remote

ERASING THE RECEIVER'S MEMORY

Erasing the receiver's memory will erase all electronic ID numbers that are stored in the receiver's memory.

1. Plug in the battery cable to a power source. In less than ten seconds, press the **left arrow**, **right arrow**, **+**, and **–** buttons on the handheld remote simultaneously.
2. Listen for a long beep indicating the receiver has erased all stored electronic ID numbers.

NOTE: *If all four buttons on the remote are not pressed simultaneously within ten seconds, or a long beep is not heard, unplug the battery cables from the power source and then refer to* ***Activating the Wireless Foot Pedal*** *and* ***Activating the Handheld Remote*** *in the* ***Product Installation, Wiring, and Battery Information*** *section of this manual.*

REPROGRAMMING THE WIRELESS FOOT PEDAL OR REMOTE

NOTE: *This activation procedure applies to the foot pedal and handheld remote.*

IMPORTANT: To activate multiple foot pedals or remotes, the motor must be unplugged from the power source and then plugged back into the power source between activating each control device.

1. Unplug the battery cables from the power source. Wait 30 seconds and then plug the motor into the power source.
2. In less than ten seconds, press and hold the **left arrow** and **right arrow** buttons on the handheld remote. For the foot pedal controller, hold the **propeller** and **anchor** button simultaneously.

FOOT PEDAL BATTERY REPLACEMENT

Battery required: Two AA alkaline batteries

1. Remove the two screws securing the battery cover plate. Remove the battery cover plate.

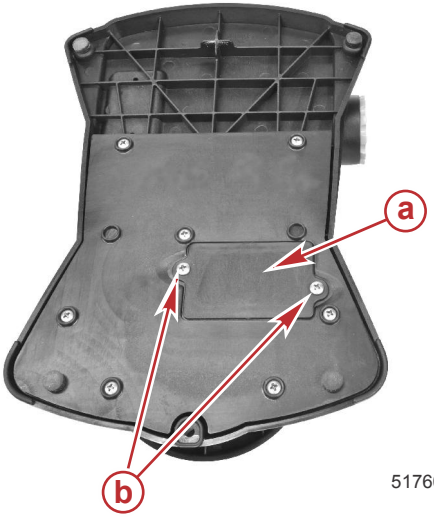

51760

a - Battery cover plate
b - Screws

2. Remove the batteries from the battery holder.
3. Install the new batteries in the proper orientation for correct polarity.
4. Ensure the rubber seal is positioned correctly around the battery cover plate.

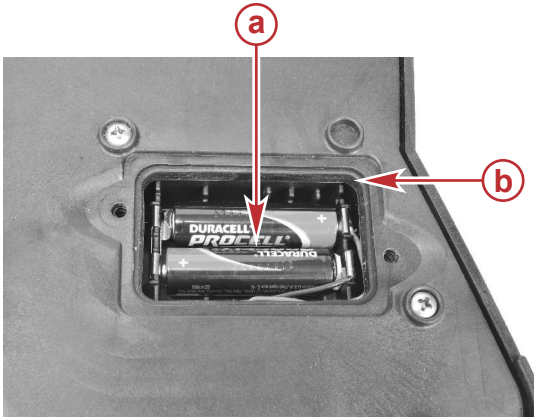

51761

a - AA alkaline batteries
b - Rubber seal

5. Replace the battery cover plate and install the two screws. Tighten the screws securely.

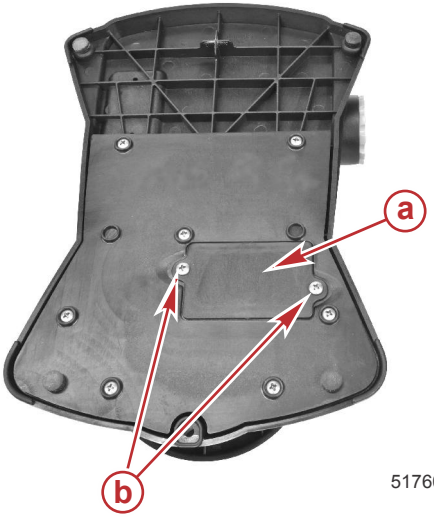

a - Battery cover plate
b - Screws

HANDHELD REMOTE BATTERY REPLACEMENT

Battery required: One AAA alkaline battery

1. Remove the four screws from the back of the handheld remote. Remove the back cover.

a - Screws (4)

2. Remove the old battery from the battery holder.

51838

3. Insert the new battery with the positive (+) side facing the positive (+) end of the battery holder.
4. Replace the handheld remote back plate and install the four screws. Ensure that the rubber seal is positioned correctly between the two halves of the handheld remote. Tighten the screws securely.

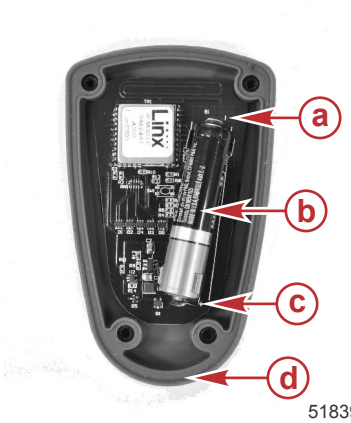

51839

a - Negative (–) end of battery holder
b - Battery
c - Positive (+) end of battery holder
d - Rubber seal

Service Assistance

Your satisfaction with your product is very important to us. If you have a problem or question about your motor, contact your dealer or any certified MotorGuide Service Center. For more service assistance information, refer to **Warranty Information**.

The following information will be needed by the service office:

OWNER SERVICE ASSISTANCE

- Your name and address
- Daytime telephone number
- Model and serial number of your trolling motor
- Proof of purchase or registration verification
- Nature of problem

Mercury Marine Service Offices

For assistance, call, fax, or write. Please include your daytime telephone number with mail and fax correspondence.

United States, Canada		
Telephone	English +1 920 929 5040 Français + 905 636 4751	Mercury Marine W6250 Pioneer Road P.O. Box 1939 Fond du Lac, WI 54936-1939
Fax	English +1 920 929 5893 Français +1 905 636 1704	
Website	www.mercurymarine.com	

Australia, Pacific		
Telephone	+61 3 9791 5822	Brunswick Asia Pacific Group 41–71 Bessemer Drive Dandenong South, Victoria 3175 Australia
Fax	+61 3 9706 7228	

Europe, Middle East, Africa		
Telephone	+32 87 32 32 11	Brunswick Marine Europe Parc Industriel de Petit-Rechain B-4800 Verviers, Belgium
Fax	+32 87 31 19 65	

Mexico, Central America, South America, Caribbean		
Telephone	+1 954 744 3500	Mercury Marine 11650 Interchange Circle North Miramar, FL 33025 U.S.A.
Fax	+1 954 744 3535	

Asia, Singapore, Japan		
Telephone	+65 65466160	Brunswick Asia Pacific Group T/A Mercury Marine Singapore Pte Ltd 29 Loyang Drive Singapore, 508944
Fax	+65 65467789	