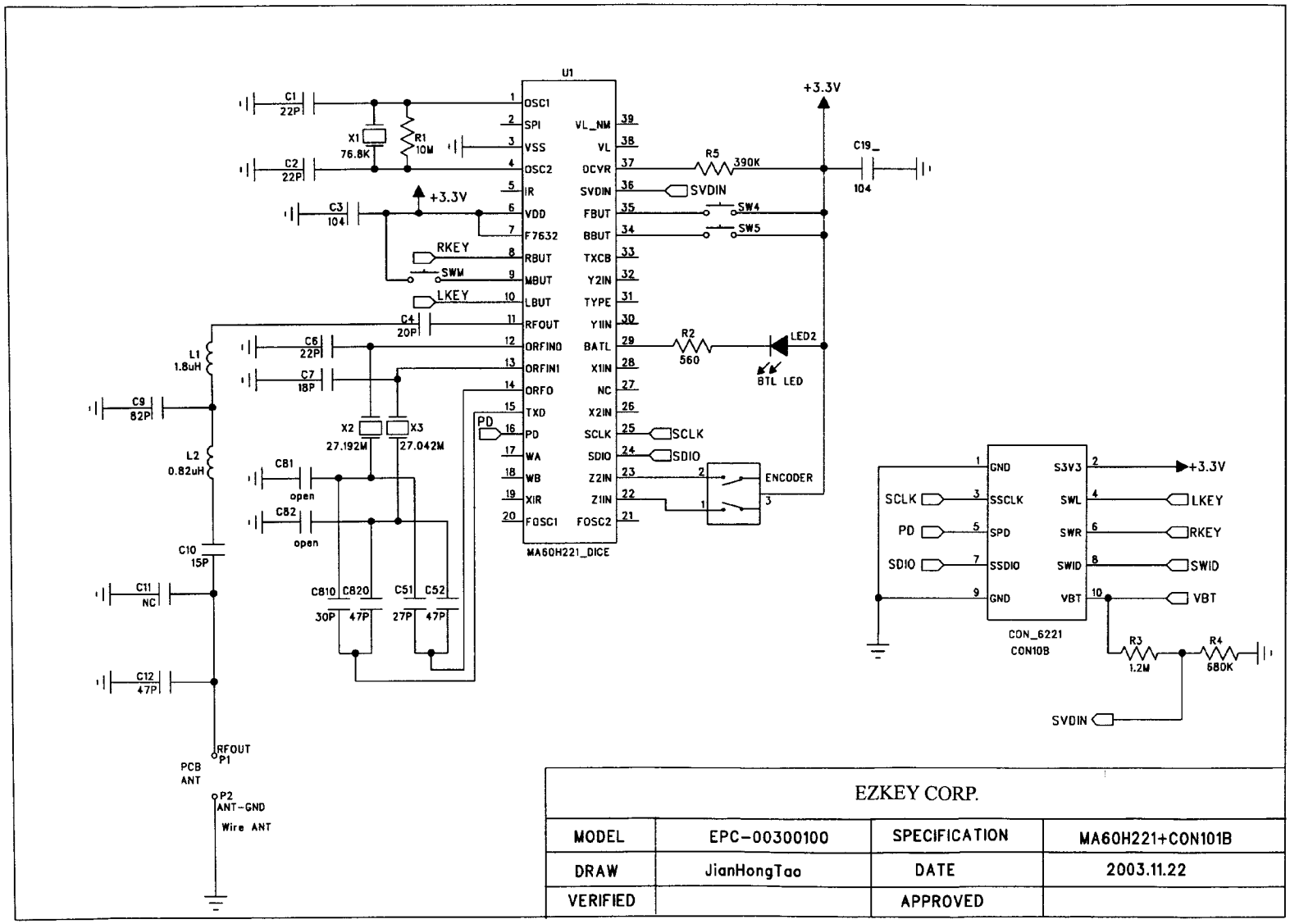

EZKEY CORP.			
MODEL	EPC-00300100	SPECIFICATION	MA60H221+CON101B
DRAW	JianHongTao	DATE	2003.11.22
VERIFIED		APPROVED	

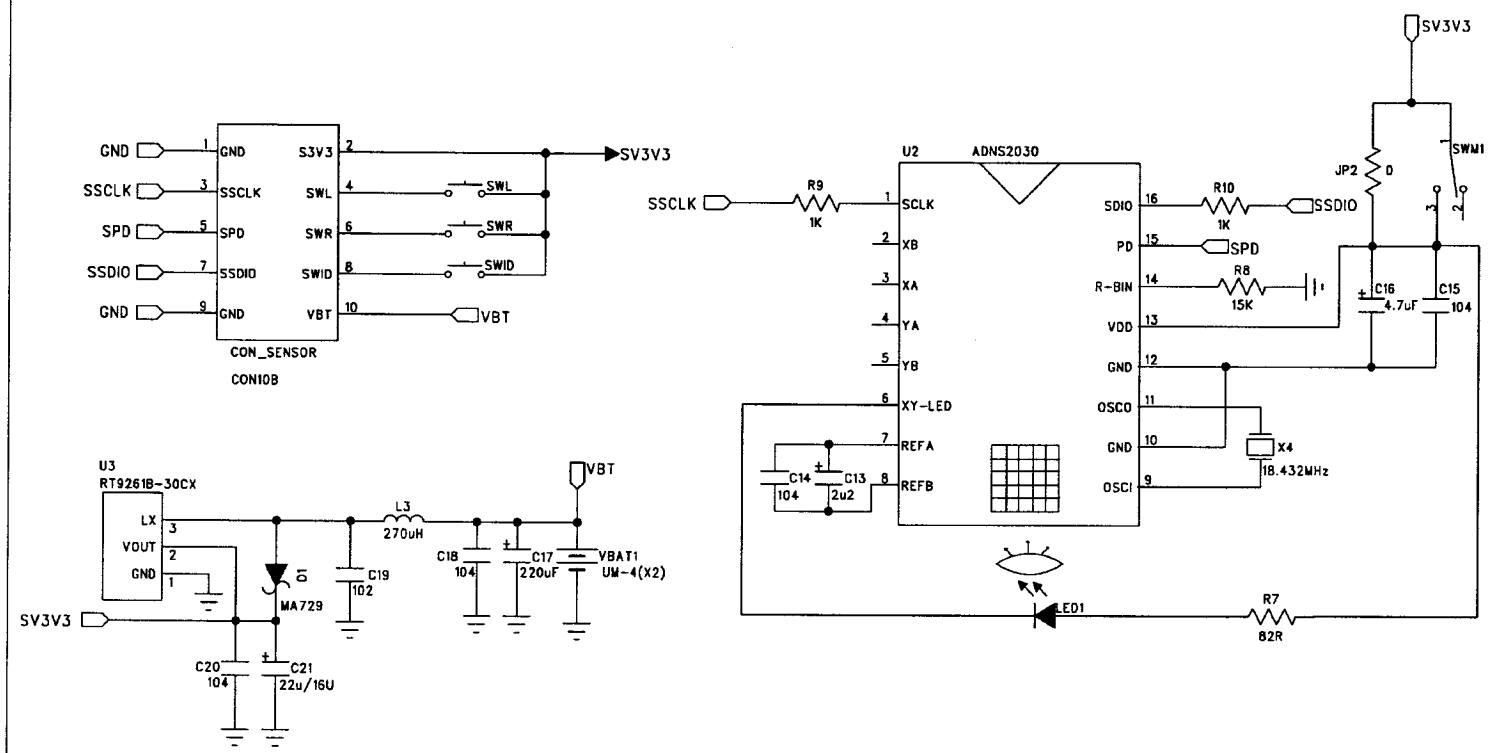

EZKEY CORP.			
MODEL	EPC-00300101	SPECIFICATION	ADNS2030+CON101B
DRAW	JianHongTao	DATE	2003.11.22
VERIFIED		APPROVED	