C H A P T E R ▼ O N E

GETTING TO KNOW THE BASICS

This chapter introduces the features and components of the computer.

Performance Features

- **High Performance Processor**
  The notebook PC is equipped with a powerful Intel processor of the latest sub-micron process, processor technologies, and high bus bandwidths.

- **Large LCD Display**
  The computer is equipped with a large 16-inch TFT high-resolution display panel for clear text and brilliant colors.

- **Expandability**
  The system offers upgradeable hard disk drive and 2 DDR SDRAM sockets for expansion, allowing the user to easily increase the storage and system capacities as the need arises.

- **Swappable Device Bay**
  The swappable device bay allows user to add an additional hard disk drive module for increased storage capacity.

- **Built-in Multifunction Card Reader (Optional)**
  Some system may come with a multiple card reader, which supports SD, MS, MMC Card formats. This allows user to access a wide array of portable memory devices available today.

- **Communication Features**
  The system provides built-in Ethernet network adapter for local network and 56K modem.

- **Firewire (IEEE1394 / 1394a) and USB2.0 ports**
  In addition to a full array of built-in I/O ports, the computer offers IEEE1394 for ultra high-speed connection to high bandwidth digital video devices and USB2.0 ports to connect to any USB-based peripheral devices.

- **Wireless LAN (Optional) or Bluetooth (Optional)**
  The optional internal Wireless LAN module allows your notebook to connect wirelessly to other 802.11-enabled systems, devices, or network.
  Alternatively, the system may come with an optional Bluetooth module.

- **TV Tuner (Optional)**
  The optional TV Tuner module allows user to watch TV or cable programs, record TV, and capture analog video signals to the hard drive or to the recordable optical drive (optional device).

Bottom View

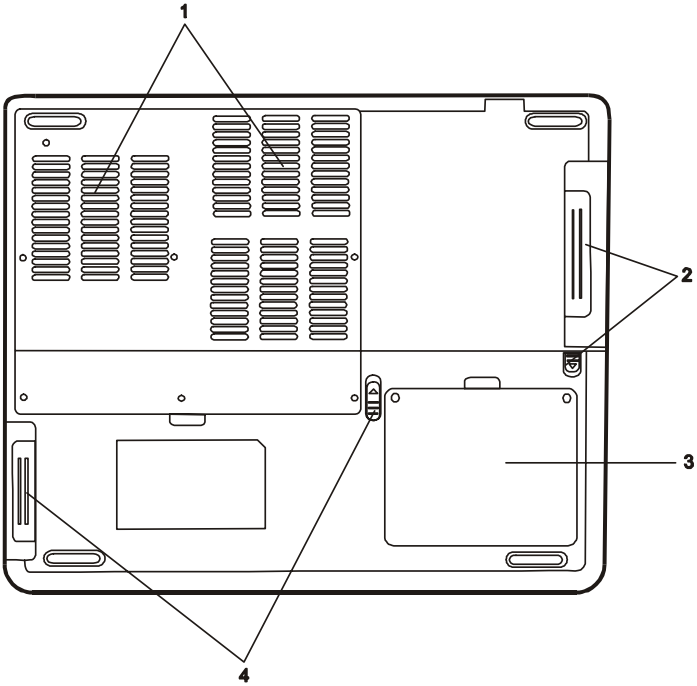

1. **Ventilation Grill**

   The fan grill is where air is exchanged to dissipate the internal heat. Do not block this airway completely.

2. **Swappable Device Bay and Latch**

   Push the latch and pull on the drive hard case to remove the swappable device.

Note: The optical drive resides in the Swappable Device Bay. Additionally, you may also purchase an optional hard drive module to be used in this bay.

3. Hard Disk Drive

This is the system's hard drive module. The hard disk drive stores all the system data. The hard disk drive can be upgraded to a larger capacity. (See Chapter 4 for instructions on a hard drive upgrade.)

4. Battery Pack and Battery Latch

The battery pack is a built-in power source for the notebook. Slide the battery latch to release the battery pack.

AC Adapter

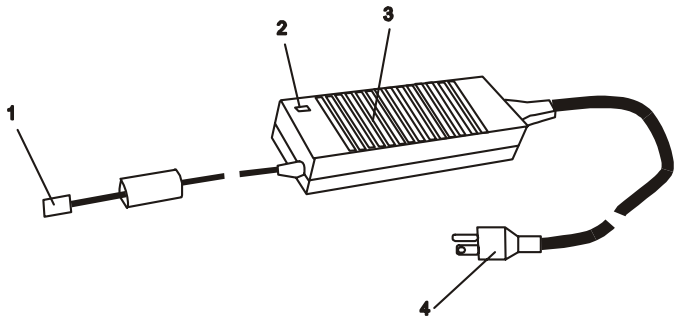

1. **DC-out Connector**
   The DC-out connector docks to the power jack (DC-in) on the computer.

2. **LED Lamp**
   The LED lamp appears green when the unit is plugged into a valid AC source.

3. **Adapter**
   The adapter converts alternating current into constant DC voltage for the computer.

4. **AC Plug**
   The AC plug plugs to the AC wall outlet.

Warning: Make sure you are using a standard 3-prong AC wall socket with a ground pin. If not, you may feel a slight tingling sensation on any of the computer's metal parts such as the I/O ports. This is caused by leakage current when the AC adapter is not properly grounded (via the ground pin). However, the amount of leakage current is within the safety regulation and is not harmful to human body.

TV Tuner / Video Capturing Module and Video / Audio Input Breakout Cable (Optional Device)

Your system may a video-capturing module built-in. To record or watch TV programs, connect the external TV Tuner Module to the TV Tuner port on the notebook.
If the device driver and application have not been installed to your system, you may need to do so via the factory CD-ROM disc when you first power up the notebook.

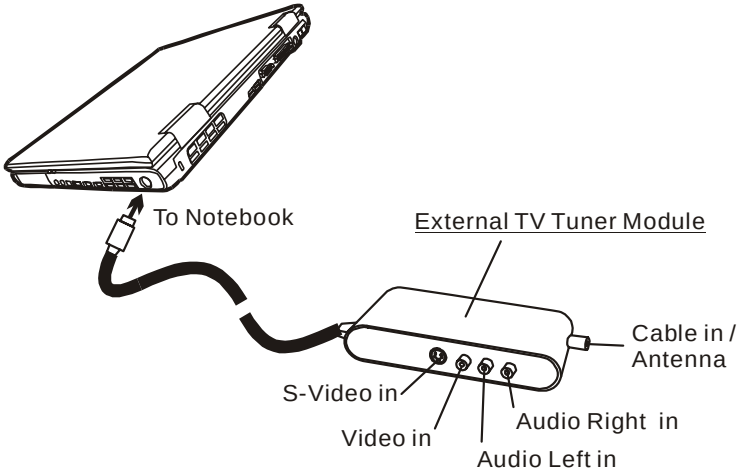

Alternatively, you may also use the Video / Audio Input Breakout Cable to connect to external video sources, such as a camcorder, DVD, or VCR.

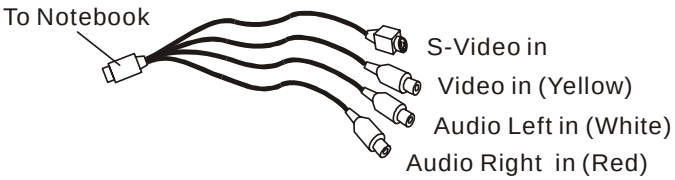

Remote Control (Optional Device)

If your system comes with a TV Tuner / Video Capturing module, the remote control can be used to play or record TV programs. You may need to install the device driver and recording application before the remote control can be used. See the following illustration for a general description of the keys.
See section elsewhere in this chapter for TV playback or record functions or see the device's CD-ROM or help screen in the application for detailed instructions.

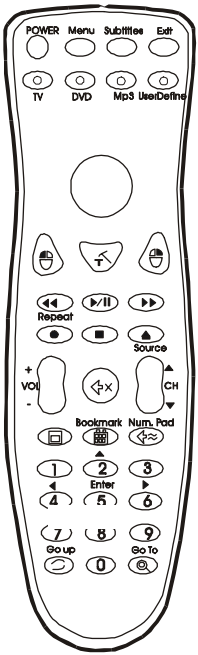

Note: Your system may come with a different remote control. Please consult the user manual in the factory CD-ROM disc.

How to Use the Romote, Watch TV and Record Video Clips

The following is a brief guide.

- You need to install the card's driver and recording application from PixelView's installation CD-ROM disk.
- You need to install a utility program called TV Card or PixelView in order to use the card's function.
- Connect a video source, cable, or antenna to the TV Tuner Module.
- The TV Tuner Module is either NTSC or PAL compliant.
- The recorded video clip is in .AVI format.
- For more detail description of the TV functions, please consult the program's built-in on-line Help manual.
- When the remote control driver is properly, the Remote Master icon will reside on the task bar. See below.

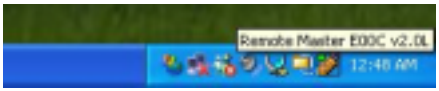

- You may program the keys on the Remote by double-click the Remote Master icon. See below.

- You may need to make sure that the TV Card is set to the correct region for it to tune-in accurately. Go to [Start > Programs > TV Card > SW Configuration]. See below.

- Press TV button on the remote and the PixelView TV Card application will start. Or, simply go to [Start > Programs > TV Card > TV Card] to launch the application. See below.

- If you are running TV Card application the first time, press TV setup button on the PixelView video panel to scan all available channels.

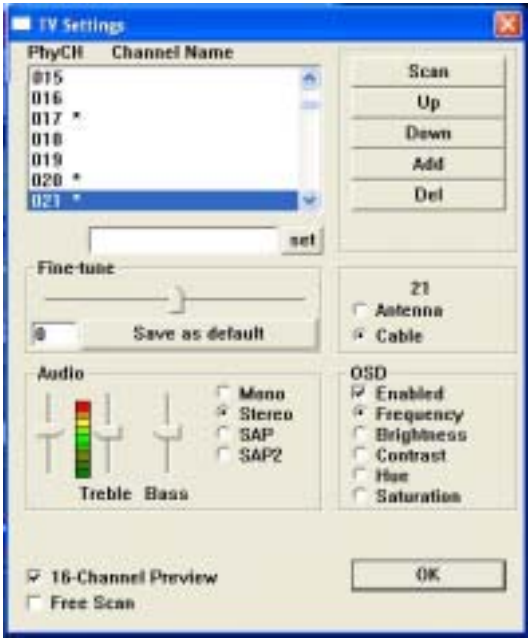

Note: For additional information regarding the TV viewing, recording, and remote control operations, please consult the Help Menu in the application and/or additional literature.

LED Status Indicator

The LED Status Indicator displays the operating status of your notebook. When a certain function is enabled, an LED will light up. The following section describes its indication.

System Status Indicator

LED Graphic Symbol	Indication
	Green light indicates the hard drive is being accessed.
	Green light indicates the optical drive is being accessed.
	Green light indicates the numeric keypad is activated.
	Green light indicates the cap-lock is activated.
	Green light indicates the scroll-lock is activated.

Power Indicator

LED Graphic Symbol	Indication
	Persistent green light indicates Power On. Light-off indicates the notebook is in Power Off mode. Blinking green light indicates the battery power is currently low.
	Blinking orange light indicates the battery is being charged (the system is OFF.) Blinking orange light indicates the battery is being charged (the system is ON.)
	Persistent green light indicates the notebook is neither in Power Saving mode nor in suspend mode. Blinking green light indicates the notebook is in suspend mode. Light-off indicates the notebook is in Power Saving mode.

Keyboard Features

Function Keys (Quick Keys)

Graphic Symbol	Action	System Control
	Fn + F1	Enters Suspend Mode.
	Fn + F3	Turns Battery Warning Beep on or off.
	Fn + F4	Changes Display Mode: LCD-only, CRT-only and LCD&CRT.
	Fn + F5	Turns Speaker Volume up.
	Fn + F6	Turns Speaker Volume down.
	Fn + F7	Increases Display Brightness.
	Fn + F8	Decreases Display Brightness.
	Num Lock	Enables the embedded keypad to work in numeric mode. The keys act like numeric keypads in a calculator. Use this mode when you need to do a lot of numeric data entry. An alternative would be to connect an external numeric keypad.
	Scroll Lock	Press the Scroll Lock key and then press ↑ or ↓ to move one line up or down.

Note: For various system controls, press the Fn (Function) key and the Fx key simultaneously.

Windows Keys

Your keyboard also has two Windows keys:

1. Start Key

This key allows you to pull up the Windows Start Menu at the bottom of the taskbar.

2. Application Menu Key

This key brings up the popup menu for the application, similar to a click of the right mouse button.

Embedded Numeric Keypad

Press Num Lock to enable the embedded numeric keypad. The numbers are printed in upper right corner of a key, in a color different from the alphabets. This key pad is complete with arithmetic operators (+, -, * , /).

Press Num Lock to revert to normal character keys.

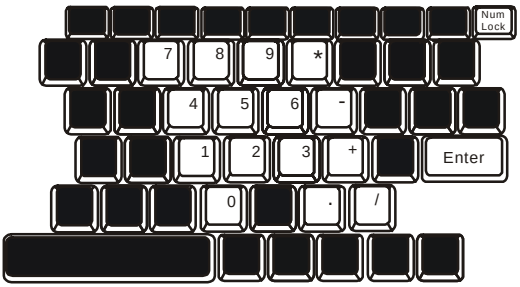

Touch Pad with Page Up / Page Down Function

The built-in touch pad, which is a PS/2-compatible pointing device, senses movement on its surface. As you move your fingertip on the surface of the pad, the cursor responds accordingly.

The following items teach you how to use the touch pad:

1. Move your finger across the touch pad to move the cursor.
2. Press buttons to select or execute functions. These two buttons are similar to the left and right buttons on a mouse. Tapping on the touch pad twice produces is similar to clicking the left button of a mouse.
3. Press Page Up / Down button to move up or down a page.

Function	Left Button	Right Button	Page Up / Down Button	Equivalent Tapping Action
Execution	Click twice quickly			Tap twice (at the same speed as double-clicking the mouse button)
Selection	Click once			Tap once
Drag	Click and hold to drag the cursor			Tap twice quickly and on the second tap hold finger to the touch pad to drag the cursor
Access Context Menu		Click once		
Move One Page Up or Down			Click upper portion to move up a page Click lower portion to move down	

Tips on Using the Touch Pad:

1. The double-click speed is timed. If you double-click too slowly, your notebook responds as if you single-clicked twice.
2. Keep your fingers dry and clean when using the touch pad. Also keep the surface of touch pad clean and dry to prolong its life.
3. The touch pad is sensitive to finger movements. Hence, the lighter the touch, the better the response. Heavy touch does not produce better response.

Graphic Subsystem

Your computer uses a high performance 16-inch active matrix TFT panel with high resolution and multi-million colors for comfortable viewing. The nVidia GeForce FX Go5600 or ATI Mobility Radeon 9?00 video graphics accelerator, which is Microsoft DirectX 9 compatible, performs graphic rendering at a lighting-fast speed.

Adjusting the Display Brightness

The notebook uses special key combinations, called hot keys, to control brightness.

Press Fn+F7 to increase the brightness.

Press Fn+F8 to decrease the brightness.

Note: To maximize your battery operating time, set the brightness to the lowest comfortable setting, so that the internal backlight uses less power.

Extending the Life of the TFT Display Device

Observe the following guidelines to maximize the life of the backlight in the display.

1. Set the brightness to the lowest comfortable setting (Fn+F8).
2. When working at your desk, connect your notebook to an external monitor and disable the internal display Fn+ F4.
3. Do not disable the suspend time-outs.
4. If you are using AC power and have no external monitor attached, change to suspend mode when not in use.

Opening and Closing the Display Panel

To open the display, slide the LCD latch to the right and lift up the lid. Then tilt it to a comfortable viewing position.

To close the display cover, fold it down gently until the LCD latches click into place.

Warning: To avoid damaging the display, do not slam it when closing. Do not place any object on top of the computer when the display is closed

Audio Subsystem

Your computer's audio subsystem is Sound Blaster Pro-compatible.

Adjusting the Volume Manually

To increase the volume, press Fn+ F5.

To decrease the volume, press Fn+F6.

Adjusting the Audio Volume in Windows

1. Click the speaker symbol in the task tray in Windows.
2. Drag the volume control bar up or down to adjust the volume.
3. To temporarily silence the speaker without changing the volume setting, click Mute.

Adjusting the Audio Volume Using the Volume Dial

Rotate the Volume Dial (located on the right edge of the notebook) to adjust the speaker volume.

Voice Recording

A built-in microphone allows you to record sound. You will need to use audio processing software to enable the built-in microphone. For example, you may use Microsoft Sound Recorder.

Modem

Your computer comes with a 56K V.90 internal fax/modem and a phone jack (RJ-11), which is located on the right rear side of your computer. Use a telephone cable to connect the computer to the telephone wall outlet.

Connecting the Modem

1. Plug one end of the phone line into the modem port located on the rear side of the computer. (For EMI compliance, you need to clip the included EMI CORE to the phone line.)
2. Plug the other end of the line into the analog phone wall outlet.

Depending on where your computer is used, you may need to change settings in the modem. Correct setting will allow you to maintain a stable connection in a country where its telecommunication system may be different to others.

To change the modem setting, do the following:

1. Go to [Start > Settings > Control Panel] and double-click on Modem Settings icon. You will see a similar dialog box.

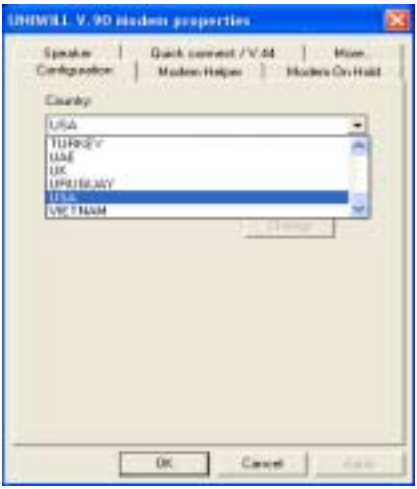

2. Click on the pull-down menu and select the country where it is applicable. Click on OK to exit.

Ethernet

Your computer is equipped with a 10/100Base-TX Fast Ethernet network adapter. Connect the active LAN cable to the RJ-45 LAN port located on the left rear side of the computer. This allows you to access and transmit data in the local area network.

Connecting to the Network

Use Unshielded Twisted Pair (UTP) Ethernet cable only.

1. Insert one end of the UTP cable into the network connector until the connector snaps securely into the receptacle.
2. Either connect the other end of the cable to an RJ-45 jack wall outlet or to an RJ-45 port on a UTP concentrator or hub in the network.

Cabling Restriction for Networks

The following restrictions should be observed for 100BASE-TX networks:

- The maximum cable run length is 100 meters(m) (328 feet[ft]).
- For 100-Mbps operations, use Category 5 wiring and connections.

Note: Consult Windows manual and / or Novell Netware user's guide for the software installation, configuration, operation of the network.

C H A P T E R ▼ T W O

BIOS SETUP AND SECURITY FEATURE

In this chapter, you will learn how to enter the BIOS Setup Menu and manipulate various hardware control settings. You will also learn how to use the built-in security features.

The Setup Utility is a hardware configuration program built into your computer's BIOS (Basic Input/Output System). It runs and maintains a variety of hardware functions. It is a menu-driven software, which allows you to easily configure and change the settings.

The BIOS contains manufacture's default settings for the computer's standard operations. However, there are occasions when you may be required to modify the default settings in the BIOS. For example, you may need to configure the BIOS power management (APM) settings if you are using DOS, Windows 3.1, or non-Windows operating system.

The BIOS allows you to set up passwords to limit access to users. This is an important feature because a great deal of vital information is carried within the computer nowadays. Unauthorized access can be prevented. Later in this chapter, you will learn how to use this security feature.

Entering the BIOS Setup Screen

First turn on the power. When the BIOS performs the POST (Power-On Self Test), press Del key quickly to activate the AMI BIOS Setup Utility.

Note: You may need to press F2 key fairly quickly. Once the system begins to load Windows, you may have to retry by cycle-power on again

Leaving the BIOS Setup Screen

When you have finished modifying the BIOS settings, exit the BIOS. It takes a few seconds to record changes in the CMOS.

BIOS Action Keys

Function Key	Command	Description
ESC	Exit	Leaves a sub-menu to return to the previous menu OR exits the BIOS setup while saving changes.
F1	General Help	Shows the Help Screen
F10	Save and Exit	Saves changes and reboots the computer.
<Tab>	Select a field	Selects the next field.
↑	Select an item	Selects the next upper item.
↓	Select an item	Selects the next lower item.
-	Lower value	Selects the next value within a field.
+	Higher value	Selects the next value within a field.

Modifying the BIOS Settings

The AMIBIOS setup main menu is subdivided into sub-menus. Each menu item is described in this section.

Main Setup

Under this menu, you may change time/date and view basic processor and system memory information.

Item	Selections / Sub-menu	Description
Date	N/A	Type in the current date, in MM/DD/YY format.
Time	N/A	Type in the current date, in HH:MM:SS format.

Advanced Setup

Item	Selections / Sub-menu	Description
Display Type	LCD CRT LCD+CRT	Choose LCD+CRT for TFT screen output and VGA display output.
Touch Pad Support	Disabled Enabled	Enable or disable the built-in touchpad.

►IDE Configuration

Item	Selections / Sub-menu	Description

Primary IDE Master	Auto ARMD ATAPI CDROM Not Installed	Primary Master is where BIOS tries to boot from first. The primary master controls the hard drive. Normally, Auto is selected.
Secondary IDE Master		The secondary master controls the ATAPI CD-ROM drive. Normally, Auto is selected.

►Super IO Configuration (Port Address)

Item	Selections / Sub-menu	Description
IR Mode	SIR FIR	Choose Fast IR for greater data bandwidth.
On Board Parallel Port	Disabled 378 / IRQ7 278 / IRQ5	[Disabled]: The port is disabled. Or you may choose a value for the parallel port.
Parallel Port Mode	Normal ECP+EPP EPP ECP	You may choose any one of these settings. ECP offers the best performance.

About Hard Disk Drive Setting

Select Auto to let BIOS configure the drive parameters automatically. Only for certain old types of hard disk drive will you need to modify the settings. After pressing Enter on [Hard Disk], BIOS display the drive parameters. If the detected drive parameters are not correct or if you’re trying to enable the enhanced IDE feature, you may still change the value manually.

- 32 Bit Mode:
  Select On to allow data transmission in 32-bit format.
- PIO Mode:

Normally use Auto To let BIOS decide the PIO mode setting. If the selected PIO mode is not supported by the IDE drive, the hard disk drive may not work properly.

- S.M.A.R.T. Mode:
  Self-diagnostic and self-monitoring features are built into newer type hard drive. Select Auto to enable S.M.A.R.T.
- DMA Mode:
  The hard drive in your computer support Ultra DMA mode.
- Block Multi-Sector Transfer:
  The hard drive in your computer support Multi-sector data Transfer.

Note: AMIBIOS automatically sets IDE drive parameters. Select Auto whenever possible. An incorrect setting make cause the computer to malfunction.

Boot Setup

►Boot Device Priority

Item	Selections / Sub-menu	Description
1st Boot Device	ATAPI CDROM Hard Drive ??NSC DP83815/6 MacPhyter?? Disabled Removable Dev.	Set the type of device for the 1st drive BIOS attempts to boot from. If NSC MacPhyter is selected, system will attempt to load boot sector from the Ethernet port.
2nd Boot Device		Set the type of device for the 2nd drive BIOS attempts to boot from.
3rd Boot Device		Set the type of device for the 3rd drive BIOS attempts to boot from.

Note: If you select NSC DP83815/83816MacPhyter, the system will attempt to boot from the network.

Note: When the BIOS performs POST, you may also press F8 Key to enable the Boot Device selection menu. You may choose ATAPI CDROM, Hard Drive, or NSC MacPhyter as the first storage device to boot from. If you have already connected a USB Floppy Disk Drive before powering up, it will appear as a Removable Device in the Boot Device selection menu.

Security Setup

►Boot Settings Configuration

Item	Selections / Sub-menu	Description
Change Supervisor Password	N/A	Install or Change the Password
Change User Password	N/A	Install or Change the Password
Clear User Password	N/A	Install or Change the Password
Boot Sector Virus Protection	Disabled Enabled	To enable or disable the boot sector protection. When Enabled, BIOS gives a warning when any program attempts to rewrite or delete the boot sector.

Note: About Boot Sector Virus Protection:
If enabled, the following warning message appears when a program attempts to alter the boot sector. You may have to enter "N" several times to prevent the boot sector write.
Boot Sector Write!!!
Possible VIRUS: Continue (Y/N)? _
The following warning message appears when a program attempts to format the hard disk drive.
Format!!!
Possible VIRUS: Continue (Y/N)? _

Using Password Protection

Two Levels of Password Protection are available. The BIOS provides both a Supervisor and a User password. If you try to activate both passwords, the Supervisor password must be set first. The passwords activate two different levels of protection:

1. System always asks for password every time it is powered on.
2. System asks for password only when you attempt to enter BIOS utility.

The passwords are encrypted and stored in NVRAM. Make sure you write them down or memorize them. If you lost the passwords, the computer may need to be sent back to the factory or to an authorized service dealer to reset the passwords.

Power Setup

Item	Selections / Sub-menu	Description
Power Button Mode	On/Off Suspend	[On/Off]: When the power button is pressed, the system is turned off. [Suspend]: When the power button is pressed, the system enters the suspend mode.

Note: The Suspend Mode selection in BIOS only applies to older Windows version (such as Windows 3.1 or Windows 95 or NT4) or non-Windows operating system. In Windows ME / 98SE / 2000 / XP, suspend mode and settings are determined by settings in the Power Options Properties (Start > Control Panel > Power Options).

Exit Setup

Item	Selections / Sub-menu	Description
Saves Changes and Exit	N/A	After you have completed the BIOS settings, select this item to save all settings, exit BIOS Setup utility, and reboot. New system settings will take effect on next power-up.
Discard Changes and Exit	N/A	Select this item if you intend to exit the BIOS Setup utility without making any changes to the current settings.
Discard Changes	N/A	Discards changes done so far to any of the setup questions.
Load Optimal Defaults	N/A	Load Optimal Default value for all the setup questions. F9 key can be used for this operation.

CHAPTER ▼ THREE

BATTERY POWER & POWER MANAGEMENT

In this chapter, you will learn the fundamentals of power management and how to use it to achieve longer battery life.

In this chapter, you will learn how to operate your notebook on battery power, how to handle and maintain the battery pack, and learn about the system's power saving features.

TFT display, central processor, hard disk drive are the major hardware subsystems that consume the most power. Power management deals how these key components should behave to conserve power. For example, you can have the system turn off its display after 2 minutes of inactivity to save power. Efficient power management can help you work longer sessions before having to recharge the battery.

The Battery Pack

Lithium-Ion Battery

Your notebook uses a twelve-cell Lithium-Ion battery pack that provides power when you don't have access to an AC outlet.

Note: It is necessary that you charge the battery pack for at least 10 hours before using it for the first time.

Note: In the Standby Suspend mode, a fully charged battery loses its power in roughly 1/2 day or less. When not being used, the battery's power will deplete in 1-2 month.

Battery Low-Power Warning

1. Low Battery Warning

Low battery condition occurs when battery power is reduced to 6%. The green power LED indicator blinks and the system beeps once every 16 seconds or so.

2. Very Low Battery Warning

Very Low battery condition occurs at 3 % power remaining. The power LED indicator blinks and the system beeps at 4-second interval.

When the notebook warns you of its low battery condition, you will have about 3-5 minutes to save your current work.

Warning: Do not expose battery packs to temperatures below 0 degree Celsius (32 degree F) or above 60 degree C (140F). This may adversely affect the battery pack.

Note: You may use Fn+F3 function keys to disable battery-warning (low power) beeps.

Installing and Removing the Battery Pack

Note: The system is not designed for frequent battery pack removal. When you need to remove the battery pack, please observe the following steps.

To Remove the Battery Pack:

1. Place the notebook bottom-side up on a flat and secured surface.
2. Push the latch and pull the battery's hard case away from the notebook.

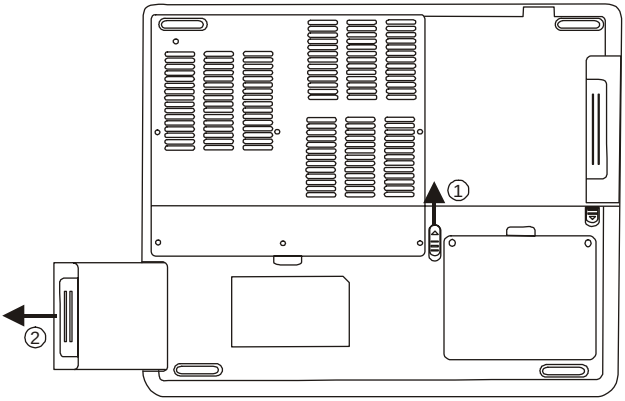

To Install the Battery Pack:

1. Place the notebook bottom-side up on a flat and secured surface.
2. Carefully insert the battery pack into the battery compartment of the notebook.

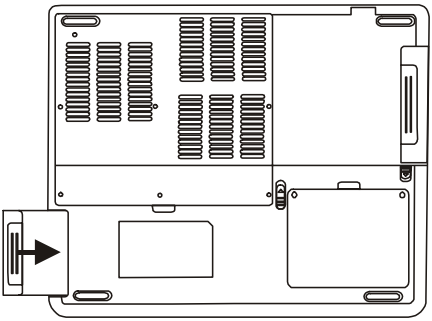

Charging the Battery and Charging Time

To charge the battery, while the battery pack is in the notebook, plug the AC adapter into the notebook and an electrical outlet. The charging time is approximately 3~4.5 hours when the notebook is turned off and approximately 8-10 hours when the notebook is turned on.
When the battery is fully charged, the battery charge indicator becomes dark (off).

Note: If system runs at heavy loading or in a high temperature environment, the battery may not be fully charged. You need to continue to charge it with the AC adapter plugged in until the charging LED turns off.

Checking the Battery Level

You can check the remaining battery power in the Windows battery status indicator, which is located at the lower right-hand corner of the task bar. (If you do not see a battery or AC-in icon on the task tray, go to Power Options Properties box and click on the Advanced tab. Check off ``Always show icon on the task bar``.)
Alternatively, you can access the power meter by clicking the Power Options icon in the Windows Control Panel.

Prolonging the Battery's Life and Usage Cycles

There are ways you can do to prolong the use of battery.

■ Use the AC adapter wherever AC wall outlet is available. This will ensure uninterrupted computing.
■ Purchase additional battery pack.
■ Store the battery pack in room temperature. Higher temperature tends to deplete the battery's power faster.
■ Make good use of the power management function. Save To Disk (Hibernate) saves the most energy by storing current system contents in a hard disk space reserved for this function.
■ The life expectancy of the battery is approximately 300 recharges.
■ See the notices section in the beginning of the user manual on how to care for the battery pack.

Note: Read Section Protecting Your Notebook in the beginning of this manual for tips about how to maintain the battery pack.

Note: To achieve optimal battery performance, you may need to do a battery calibration at a 3-month interval. To do this:

1. Fully charge the battery.
2. Then discharge the battery by entering the BIOS setup screen. (Press F2 key as soon as you turn on the computer. And let it remain at the setup screen until the battery runs out.
3. Fully charge the battery again.

Using Windows Power Options

Windows Power Management provides basic power saving features. In the Windows Power Options Properties [Start > Settings > Control Panel > Power Options] dialogue box, you may enter time-out values for display and hard disk drive. Windows power manager saves power by turning off hard drive after 1 minute of inactivity, for example.

Windows' Power Schemes

The power management control panel in Windows XP, known as Power Schemes, is designed to provide the user with an easy-to-use interface. The Power Schemes tab can be found in the Power Options Properties panel that is accessible via the control panel window.
Schemes are easy to understand, based on notebook usage scenarios, and control not only processor power usage but other system peripherals as well.
Go to [Start > Settings > Control Panel] and double-click the Power Options icon.

Always on mode puts the processor into maximum performance mode, which provides no power saving. The other schemes control processor performance based on demand. For example, Max Battery mode lowers the processor's speed and voltage to conserve power as much as possible.

In this dialog box, you can manually set the LCD and hard drive's time-out values in the Plugged in column and in the Running on batteries column. Lower time-out values will save more battery power.

Note: Also consult Windows user guide for more information on how to use Windows power management functions.

Note: Actual dialogue box shown above may appear slightly different.

Suspend Mode

Standby Suspend

The system automatically enters this mode after a period of inactivity, which is set in the Power Schemes dialog box. In Standby mode, hardware devices, such as display panel and hard disk, are turned off to conserve energy.

Hibernate Suspend

In this mode, all system data are saved in the hard disk before powering down. When this mode is activated, all system state and contents are saved to the hard disk drive after a period of inactivity defined by the user. No power or very little power is drawn from the battery module under this mode.

However, depending on how much RAM that have been installed on your computer, the amount of time the system requires to restore all its previous contents can range from 5 to 20 seconds.

For Windows ME / 2000 / XP users, hibernation is handled by the operating system; therefore, no special disk partition or disk file is necessary.

If you wish to activate Hibernate mode, you need enable Hibernate Support in the Hibernate tab of the Power Options menu.

Note: Do not install or remove the memory module when the system is in the suspend mode.

Note: Actual dialogue box shown above may appear slightly different.

Power Button Action

The notebook PC's power button can be set to turn off the system or activate the suspend mode.

Go to [Start > Settings > Control Panel > Power Options] and click on the Advanced tab. In the pull-down menu, select how you wish the power button to work as.

Note: Actual dialogue box shown above may appear slightly different.

Warning: In the *When I close the lid of my portable computer* pull-down menu, DO NOT select *Do nothing* – otherwise the system will still run at high speed while the processor's fan grill is fully blocked by the closed LCD panel. The heat will damage the LCD panel.

Low Battery Warning

You can define when and how the system warns you of its battery-low condition.

Go to the Alarms tab in the Power Options Properties box. If you wish to hear audible beeps, click on the Alarm Action button and put a check on Sound Alarm.

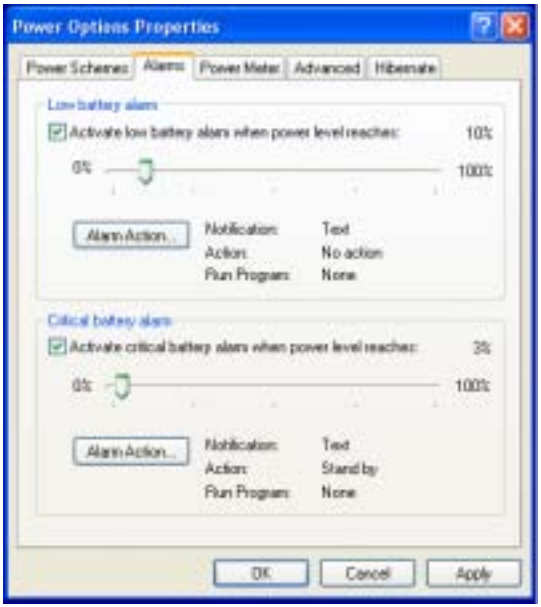

Note: Consult Windows user guide for more information on how to use Windows power management functions.

Note: Actual dialogue box shown above may appear slightly different.

Power Manu Quick Access

Instead of making specific selections in the Power Options Properties box, you can quickly and easily specify which pre-set power saving function you desire by clicking on the Battery icon at the lower right-hand corner of the task bar. (If you do not see a battery or AC-in icon, go to Power Options Properties box and click on the Advanced tab. Check off ``Always show icon on the task bar``.) Select Max Battery if you want the system to enter suspend mode more often. Or, select Always On if your notebook PC is plugged into an AC power source.

Note: Actual dialogue box shown above may appear slightly different.

C H A P T E R ▼ F O U R

UPGRADING YOUR COMPUTER

In this chapter, you will learn how to upgrade the DRAM, hard disk drive, and to install the optional wireless LAN mini PCI card.

Upgrading the Hard Disk Drive

Replacing the original drive with one of larger capacity can increase the hard drive capacity of your computer. The computer uses a 9.5 mm (height), 2.5-inch Ultra ATA-66 / 100 / 133 type hard disk.

Be sure to make a backup copy of all your data before attempting this operation.

Warning: Hard drive upgrade is a delicate process. Please observe the following instructions carefully or have a qualified technician install it for you. Damages due to mishandling of this procedure are NOT covered by the manufacture's warranty.

Warning: Apply care when handling the hard disk.

- Do not drop or apply any shock.
- Do not press on the cover.
- Do not touch the connector with your fingertips.
- Mishandling of the hard drive can result in permanent loss of data. Make a backup copy of the drive s content before you remove it.

Note: Certain models that come with the IBM-brand hard drive emit a clattering sound when it is being rattled. This is a normal condition.

Upgrading the Hard Disk Drive

To replace the hard disk drive, do the following:

1. Turn OFF the computer. Unhook the AC cord and all cables/devices attached to the notebook.
2. Place your hand on a large metal object momentarily to discharge any static electricity.
3. Locate and remove 2 Screw A's on the Metal Cover.

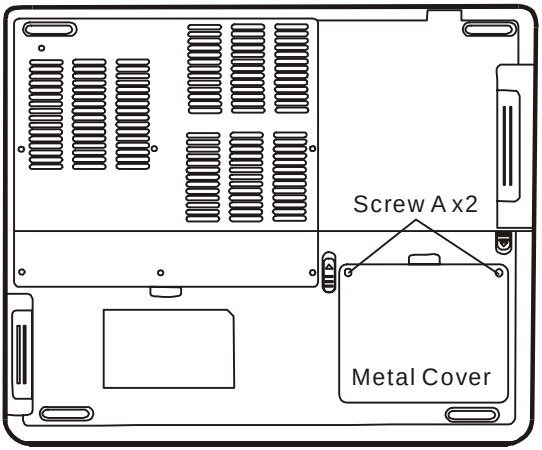

4. Remove the Metal Cover.
5. Locate and remove 4 Screw B's. Gently remove the HDD module from the HDD cable connector.

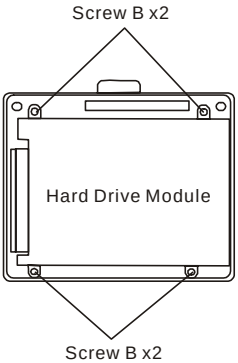

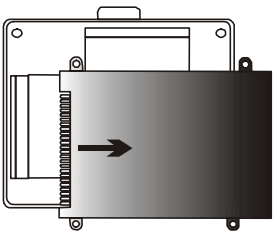

6. Locate and remove 4 Screw C's from the HDD module. Remove the metal case.

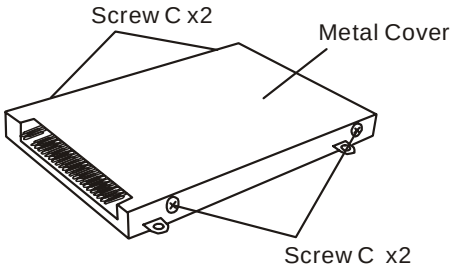

7. Re-attach the metal cover to the new hard drive and tighten 4 Screw C's. Note the green PC board of the hard disk drive is facing against the metal case.
8. Re-attach the HDD Cable Connector to the HDD module.
9. Re-attach and tighten 4 Screw B's. (If the HDD assembly is not fully inserted into the bay, the screw and its hole will not line up.)
10. Replace the System Device Cover and 2 Screw A's.

Congratulations! You have now completed the hard drive upgrade. When you boot up the PC, you may need to create a primary HDD partition and reformat the new drive and re-install O/S, drivers, and all the necessary applications.

Upgrading the System Memory

Many applications will generally run faster when the computer's dynamic memory capacity is increased. The computer provides one DDR memory socket, located underneath the System Device Cover. You can increase the amount of memory by replacing the existing one with a dual inline memory module (commonly known as DIMM) of a higher capacity. The DIMM can be 128MB, 256MB, 512MB, or 1024MB in capacity. The DIMM is of type DDR SDRAM, has 200 pins and runs on 2.5V. The DIMM should be PC1600, PC2100, or PC2700 compliant.

Warning: Memory upgrade is a delicate process. Please observe the following instructions carefully or have a qualified technician install it for you. Damages due to mishandling of this procedure are NOT covered by the manufacture's warranty.

Warning: Changing memory while your computer is in suspend or power-saving mode may cause permanent damage to the hardware. Make sure you turn off the power and unplug the AC cord before proceeding with a memory upgrade.

Warning: You should only use the DIMM module that is approved by the reseller or the manufacturer; otherwise the system may become unstable.

Installing a memory module (DIMM) into the system

To install the DIMM, do the following:

1. Power OFF the notebook. Unplug the AC cord and all cables/devices attached to the notebook.
2. Place your hand on a large metal object momentarily to discharge any static electricity. Place the notebook on a flat surface and fully open the LCD lid.
3. Find the keyboard latches near the upper edge of the keyboard.

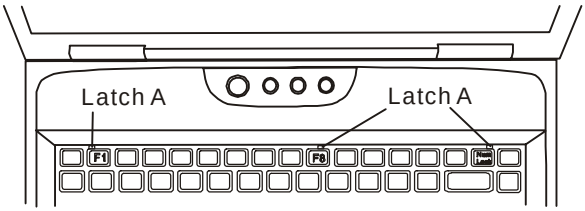

4. The latch is spring-loaded. It will retract when pressed and revert back to its original position when released. Using a small blade to press the latch inward. The keyboard tray should pop up slightly over the latch. If the keyboard tray does not pop up, try to gently lift it up just over the latch. Repeat the step for the other keyboard latches.

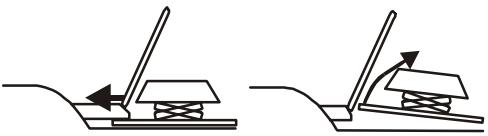

5. Carefully lift up the bottom edge and position the keyboard out of the way and the following is revealed.

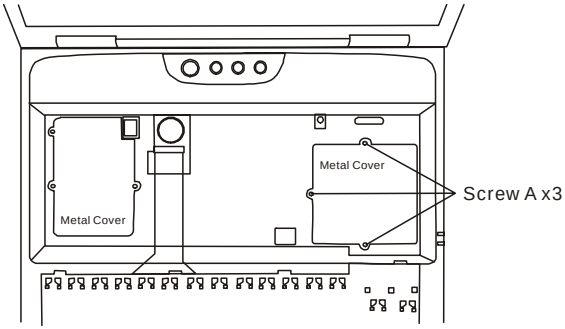

6. Remove 3 Screw A's and remove the DIMM Metal Cover. The DIMM socket is now seen as shown below.

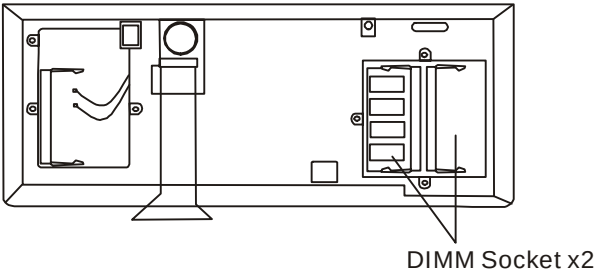

7. If you need to remove an old DIMM from the socket, press out on the latches located on both edges of the socket at the same time. The DIMM should pop up to an angle of 30 degree (see diagram below.). Pull the DIMM module out of the memory socket. Store away the DIMM for the future use.

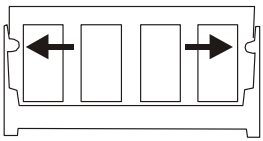

8. Install the new DIMM module into the memory socket. The DIMM will only fit in one orientation. Insert the DIMM at an angle of approximately 30 degrees into the empty memory socket. Then press it firmly so that the contact edge is driven into the receiving socket.

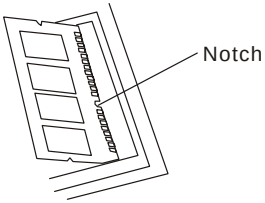

9. Pivot the DIMM until the latches on both sides of the socket snap into place.

Note: Notice the notch on the DIMM. The notches should fit nicely with the socket.

10. Replace DIMM Metal Cover and 3 Screw A's. Put the keyboard back to its position. Make sure the upper edge of the keyboard now resides under the spring-loaded latches.

Congratulations! You have just completed the memory upgrade. When you boot up the computer, you should expect to see an increase in DRAM capacity.

Note: Your computer has been tested with a wide range of DIMM on the market. However, not all memory modules are compatible. Check with your system vendor for a list of compatible DIMM for your computer.

C H A P T E R ▼ F I V E

TROUBLE SHOOTING

In this chapter, you will learn how to solve common hardware and software problems.

Your computer has been fully tested and complies with the system specifications before shipping. However, incorrect operations and/or mishandling may cause problems.

This chapter provides a reference for identifying and correcting common hardware and software problems that you may encounter.

When you encounter a problem, you should first try to go through the recommendations in this chapter. Instead of returning the computer and waiting for repair, you may easily solve the problems by considering the following scenarios and possible solutions. If the error continues, contact your reseller for service information.

Before taking further actions, consider the following suggestions:

■ Check to see if the problem persists when all the external devices are removed.

■ Check to see that the green light indicator on the AC adapter is lit.

■ Check to see the power cord is properly plugged to the wall outlet and to the computer.

■ Check to see the power indicator of the computer is on.

■ Check to see if your keyboard is operational by pressing and holding any key.

■ Check for any incorrect or loose cable connections. Make sure the latches on the connectors latch securely on to the receptor end.

■ Be sure you have not performed an incorrect setting on the

hardware devices in the BIOS Setup utility. A faulty setting may cause the system to misbehave. If you are not sure of the changes you made, try to restore all the settings to factory defaults.

■ Be sure all the device drivers are installed properly. For example, without the audio driver properly installed, the speakers and microphone will not work.

■ If external devices such as USB camera, scanner, printer do not function correctly when connected to the system, it is usually the device's own problem. Consult the device's manufacturer first.

■ Some software programs, which have not gone through rigorous coding and testing, may cause problems during your routine use. Consult the software vendor for problem solving.

■ Legacy peripheral are not plug-and-play capable. You need to restart the system with these devices powered up and connected first.

■ Be sure to go to BIOS SETUP and load DEFAULT SETTING after BIOS re-flash.

■ Be sure the Quick Key Lockout Switch on the bottom of the computer is not engaged; otherwise the quick keys will not work.

Audio Problems

No speaker output -

■ Turn up the volume dial located at the right edge of the computer. See Chapter 1 for its location.

■ Software volume control is turned down in Microsoft Sound System or is muted. Double-click the speaker icon on the lower right corner of the taskbar to see if the speaker has been muted or turned down all the way.

■ Most audio problems are software-related. If your computer worked before, chances are software may have been set incorrectly.

■ Go to [Start > Settings > Control Panel] and double-click the Sounds and Audio Devices icon. In the Audio page, make sure that C-Media Wave Device is the default playback device.

Sound cannot be recorded -

■ Double-click the speaker icon on the lower right corner of the taskbar to see if the microphone has been muted.

1. Click Options and select Properties.
2. Select Recording and click the OK button.
3. After Click OK button, the recording volume control panel will appear.

■ Go to [Start > Settings > Control Panel] and double-click the Multimedia icon (or Sounds and Audio Devices icon). In the Volume or Audio page, make sure that C-Media Wave Device is the default recording device.

Hard Disk Problems

The hard disk drive does not work or is not recognizable -

■ If you had just performed a hard disk upgrade, make sure the hard drive connector is not loose and the hard disk drive is also correctly seated. Remove it and reinsert it firmly, and restart your PC. (Refer to Chapter 4 for details.)

■ The new HDD may need to be partitioned and reformatted. O/S and drivers will need to be re-installed as well.

■ Check the hard disk indicator LED. When you access a file, the LED lamp should light up momentarily.

■ The new HDD may be defective or is not compatible.

■ If your computer has been subjected to static electricity or physical shock, you may have damaged the disk drive.

The hard drive is making abnormal whining noises -

■ You should back up your files as soon as possible.

■ Make sure the source of noise is indeed from the hard drive and not the fan or other devices.

The hard disk drive has reached its capacity -

■ Run Disk Cleanup utility in Windows. [Start > All Programs > Accessories > System Tools > Disk Cleanup] The system will prompt you for what to do.

■ Archive files or programs that you had no longer used by moving them to an alternative storage medium (floppy disk, optical record-able disk, etc.) or uninstall programs that no longer use.

■ Many browsers store files in the hard drive as a cache to speed up the performance. Check the program's Online Help

for instructions on decreasing the cache size or on removing temporary Internet files.

■ Empty the Recycle Bin to create more disk space. When you delete files, Windows saves them to the Recycle Bin.

The hard disk takes longer to read a file -

■ If you have been using the drive for a period, the files may be fragmented. Go to [Start > Programs > Accessories > System Tools > Disk Defragmenter] to perform a disk defragmentation. This operation may take a while.

■ Interrupt requests or problems with other hardware devices may have occupied the CPU and therefore slows down the system performance.

The files are corrupted -

■ Run the Error-checking utility in Windows to check the HDD. Double-click My Computer. Right-click C: and select Properties. Click Check Now in Error-checking in Tools.

CD-ROM, DVD-ROM, CD-RW, or Combo Drive Problems

The CD-ROM, DVD-ROM, or Combo drive does not work -

■ Try rebooting the system.

■ The disk is damaged or files are not readable.

■ After you have inserted a CD-ROM disk, it may take a moment before you can access its content.

The drive dose not read any disks -

■ The CD may not be properly seated in the tray. Make sure the disk is firmly seated onto the spindle.

■ The disk is damaged or not readable.

The disk cannot be ejected -

■ Normally, it takes a few seconds to eject the disk.

■ If the disk cannot be ejected, it may be mechanically jammed. Straighten out a paper clip and insert it to a tiny hole next to the eject button. This should reject the disk tray. If not, return the unit for repair. Do not forcefully pull on the disk tray.

The CD-RW drive (optional device) cannot record -

■ You need to purchase and install a burner utility program to record files to a blank media.

Display Problems

The display panel is blank when the system is turned on -

■ Make sure the computer is not in the Standby or Hibernate suspend modes. The display is turned off to conserve energy in these modes.

The screen is difficult to read -

■ The display resolution should at least be set to at least1024x768 for optimal viewing.

1. Go to [Start > Settings > Control Panel] and double-click the Display icon.
2. Under the Settings page, set screen resolution to at least 1024x768 and choose at least 256 colors.

The screen flickers -

■ It is normal if the display flickers a few times during shutting down or powering up.

Keyboard and Mouse Problems

The built-in touch pad performs erratically -

■ Make sure there is no excess perspiration or humidity on your hand when using the touch pad. Keep the surface of the touch pad clean and dry.

■ Do not rest your palm or wrist on the surface of the touch pad while typing or using the touch pad.

The built-in keyboard accepts no input -

■ If you are connecting an external keyboard to the system, the built-in keyboard may not work.

■ Try restarting the system.

The characters on the screen repeat while I type.

■ You may be holding the keys down too long while you're typing.

■ Keep the keyboard clean. Dust and dirt under the keys could cause them to stick.

■ Configure the keyboard to wait longer before the auto repeat feature starts. To adjust this feature, Go to [Start > Settings > Control Panel], and double-click the Keyboard icon. A dialogue box shows up with the adjustable settings for the keyboard.

CMOS Battery Problem

A message “CMOS Checksum Failure” displays during the booting process or the time (clock) resets when booting -

■ Try to reboot the system.

■ If the message “CMOS Checksum Failure” appears during the booting procedure even after rebooting, it may indicate failure of the CMOS battery. If so, you need to replace the battery. This battery normally lasts two to five years. The battery is of type CR2032 (3V). You may replace it by yourself. The battery is located next to the DDR DRAM socket. See Chapter 4 on how to access the DDR DRAM socket. If you are not sure how this is done, return the notebook to the dealer.

Memory Problems

The POST does not show an increased memory capacity when you have already installed additional memory -

■ Certain brands of memory module may not be compatible with your system. You should ask your vendor for a list of compatible DIMM.

■ The memory module may not be installed properly. Go back to Chapter 4 to review the details of this operation.

■ The memory module may be defective.

The O/S issues an insufficient memory error message during operation -

■ This is often a software or Windows-related problem. A program is draining the memory resources.

■ Close the application programs you're not using and restart the system.

■ You need to install additional memory module. For instructions, go to Chapter 4 Upgrading Your Computer.

Modem Problems

The built-in modem does not respond -

■ Make sure the modem driver is loaded properly.

■ Go to [Start > Settings > Control Panel > Phone and Modem Options] and go to Modems tab. Make sure SmartLink 56K Voice Modem or Uniwill V.90 Modem is listed. Otherwise, click the Add button to add the modem drive, which is located in the factory CD-ROM (or floppy diskette).

■ Go to [Start > Settings > Control Panel > System] and click Device Manager button in the Hardware page to check for possible resource or driver conflict. See Windows on-line help or manual for how to handle such problems.

■ Make sure the phone line, which the computer is connected to, is working.

Connection difficulties -

■ Be sure to disable Call Waiting on the phone line.

■ Be sure to have the correct country setting where your computer is used. [Start > Settings > Control Panel > Modem Settings > Configuration] In the Country/Area pull-down menu, select the appropriate country setting.

■ Excessive line noise might cause the connection to be dropped. To check this, put the regular phone handset on the line and placing a phone call. If you do hear abnormal noise, try to make the modem connection with a different line or contact your local telephony company for service.

■ Make sure the cable connection is firm.

■ Try a different receiver number and see if the problem persists.

Network Adapter / Ethernet Problems

The Ethernet adapter does not work -

■ Go to [Start > Settings > Control Panel > System > Hardware > Device Manager]. Double-click on Network Adapters and check if SiS 900-Based PCI Fast Ethernet Adapter appears as one of the adapters. If it does not exist, Windows has not detected the National Semiconductor Fast Ethernet adapter or the device driver has not been installed properly. If there is a yellow mark or red-cross on the network adapter, it may be a device or resource conflict. Replace or update the device driver from the factory CD-ROM disk or consult Windows manual on how to solve the resource conflict problem.

■ Make sure the physical connections on both ends of the cable are good.

■ The hub or concentrator may not be working properly. Check to see if other workstations connected to the same hub or concentrator is working.

The Ethernet adapter does not appear to operate in the 100Mbps transmission mode -

■ Make sure the hub you are using supports 100Mbps operation.

■ Make sure that your RJ-45 cable meets the 100Base-TX requirements.

■ Make sure the Ethernet cable is connected to the hub socket that supports 100Base-TX mode. The hub may have both 100Base-TX and 100Base-T sockets.

PC Card / PCMCIA Problems

Note: Some system may not have the PC Card Slot option.

PC Cards do not function-

■ Make sure you have properly installed the driver for the card.

■ Consult the card's manual or contact the vendor for trouble-shooting.

The PC card cannot be recognized -

■ Windows NT4.0 does not support PCMCIA (PC Card) function. You may need an external program for this.

■ Make sure the card is fully inserted; the outer end of the card should be even with the edge of the computer.

■ Remove and insert the PC card again.

■ Make sure there is no IRQ conflict with the card. See Windows on-line help for solving IRQ conflicts.

■ Reboot the computer and see if the problem persists.

■ The card may be defective. Try the card on another system, if possible.

Windows crashes or freezes when you remove the PC card-

■ Make sure you have <Stop> the PC card before removing it. Double-click the Safely Remove Hardware icon at the lower right corner of the task bar and select the card you wish to stop. When you click <Close>, in few seconds Windows will prompt you to remove the card.

Performance Problems

The computer becomes hot -

■ In a 35°C environment, the certain areas of the computer's back case are expected to reach 50 degrees.

■ Make sure the air vents are not blocked.

■ If the fan does not seem to be working at high temperature (50 degrees Celsius and up), contact the service center.

■ Certain programs that are processor-intensive may increase the computer temperature to a degree where the computer automatically slows down its CPU clock to protect itself from thermal damage.

The program appears stopped or runs very slowly -

■ Press CTRL+ALT+DEL to see if an application is still responding.

■ Restart the computer.

■ This may be normal for Windows when it is processing other CPU-intensive programs in the background or when the system is accessing slow-speed devices such the floppy disk drive.

■ You may be running too many applications. Try to close some applications or increase system memory for higher performance.

■ The processor may have been overheated due to the system's inability to regulate its internal heat. Make sure the computer's ventilation grills are not blocked.

Printer Problems

The printer does not print -

■ Make sure the cable connection is secured and the printer is powered up, if the printer is connected via the parallel port.

■ Run the printer self-test to see if it reports any problem.

■ Check if the printer displays any error messages. A paper jam may have occurred.

■ Make sure you have already installed the printer driver.

■ Try rebooting the system with the printer powered up and connected first.

The printer does not print what's on the screen -

■ The information displayed on the screen may not exactly be the same as what is printed.

■ If the printer prints extra and strange symbols, it is the result of the cache (garbage) in the printer memory buffer. Cancel all the printer tasks and toggle off the printer power switch to clear up the memory buffer. Then, turn the printer back online and print again.

■ Make sure you install the correct printer driver.

The printer does not respond to infrared communication -

■ See Infrared Problems listed elsewhere in this chapter.

Firewire (IEEE1394) and USB2.0 Problems

The USB device does not work -

- Windows NT 4.0 does not support USB protocols
- Check the settings in the Windows Control Panel.
- Make sure you have installed the necessary device drivers.
- Contact the device vendor for additional support.

The IEEE1394 port does not work -

- Go to [Start > Settings > Control Panel > System > Hardware > Device Manager]. You should see an entry which reads “IEEE 1394 Bus host controllers”. If it does not exist, Windows has not detected the host controller or the device driver has not been installed properly. If there is a yellow mark or red-cross on the 1394 host controller, it may be a device or resource conflict. Replace or update the device driver from the factory CD-ROM disk or consult Windows manual on how to solve the resource conflict problem.
- Make sure the cable is fully connected.
- Make sure you have installed the necessary device drivers.
- Contact the device vendor for additional support.

A P P E N D I X ▼ A

PRODUCT SPECIFICATION

▼ Processor and Core Logic

■Processor

Intel P4 (≦3.06 GHz), 478 Pins FC-PGA2 Type, 400/533/800 MHz FSB, 512 KB L2 with Error Correction Code

■Core Logic

SiS 846FX + SiS SB963 chipset with audio, modem LAN, and USB2.0 controllers integrated
400/533/800 MHz Front Side Bus
266/333 MHz DDR interface

▼ System Memory

■Memory Type

DDR SDRAM, 333/266 MHz, PC2700 / PC2100 / PC1600 compatible

■Default

0 / 128 / 256 / 512 / 1024MB, 2.5-Volt 64-bit bus

■Memory Expansion

Two 200-pin DIMM sockets, Max 2 GB

▼ Display

■LCD Panel options

- 16-inch (1600x1200 UXGA or 1400x1050 SXGA+) active-matrix TFT display with up to 16M colors or
- 15.4-inch (1680x1050 WSXGA+ or 1280x800 WXGA) active-matrix TFT display with up to 16M colors

■Graphic Accelerator Options

- nVidia GeForce FX Go5600 256-bit 2D / 3D graphics accelerator or
- ATI Mobility Radeon 9?00 256-bit 2D / 3D graphics accelerator

■AGP Bus

8X AGP architecture graphics capability

■Motion Playback

Hardware Motion Compensation and IDCT Supported for MPEG1/2 Playback

■Frame Buffer

64MB or 128MB DDR DRAM

■Other Features

Direct3D compatible, DirectX compatible

▼ Audio

■Chipset	SiS SB963 integrated audio controller
■Audio Codec	Realtek 8110S
■Sound Capabilities	DirectSound 3D accelerator SoundBlaster Pro compatible AC97 V2.2 compatible 2 or 4 Stereo Speakers (1 Watt each)

▼ Modem

■Chipset	SiS SB963 integrated Modem Controller with MDC card, AC97 V2.2 Modem support
■Transmission Rate	V.90 / K56flex for download data speed up to 56Kbps. V.34, V.17, V.29 protocol supported

▼ LAN / Ethernet

■Chipset	SiS SB963 integrated Ethernet function for 10/100Base-TX network standards
■MAC	Realtek 8169S
■PnP Function	Windows 95 / 98 / ME / 2000 / XP Plug and Play compatible
■Flow Control	Automatic Jam and auto-negotiation for flow control
■Speed Selection	Auto Negotiation and Parallel detection for automatic speed selection (IEEE 802.3u)
■Other Features	High performance 32-bit PCI bus master architecture with integrated DMA controller for low CPU and bus utilization Remote Wake-up Scheme supported Hot Insertion supported

▼ Firewire IEEE1394(a)

■Chipset	SiS SB963 IEEE1394 OHCI Host Controller and Up to 400 Mbps
■PHY Layer	FW802
■Capabilities	Expandable up to 63 devices in chains

▼ Storage

■Hard Drive	2.5-inch format hard disk drive
■CD-ROM	5.25-inch format (12.7mm height) fixed module with 24X speed
■DVD-ROM	5.25-inch format (12.7mm height) fixed module (Optional Purchase)
■CD-RW	5.25-inch format (12.7mm height) fixed module (Optional Purchase)
■Combo Drive	5.25-inch format (12.7mm height) fixed module (Optional Purchase)
■DVD±R/±RW	5.25-inch format (12.7mm height) fixed module (Optional Purchase)

▼ Keyboard & Touch pad

■Keyboard	88/90-key QWERTY keyboard with embedded numeric keypad and Windows keys, 19mm Pitch
■Touch pad	Built-in Touch Pad with PageUp / PageDown Buttons and Scroll Bar 19.05mm Pitch

▼ Ports and Connectors

■Audio-In Port	One Microphone-in jack
■Audio-Out/SPDIF	One Headphone / SPDIF jack
■Volume Pot	One VR Dial for audio volume control
■Firewire	One Firewire (IEEE1394) host connector
■USB2.0 Port	Three USB2.0-compliant connectors
■Ethernet	One standard network Ethernet connector (RJ-45)
■Modem	One modem / phone connector (RJ11)
■S-Video	One S-video (TV-out) output connector
■Power-In	One DC-in connector
■Parallel	One 25-pin parallel port connector
■VGA Port	One 15-pin VGA connector
■Consumer IR	One Consumer IR Receiver lens for Remote (Optional)
■FIR/SIR	One SIR/FIR Port
■Card Reader	One Card Reader slot (MMC/MS/SD supported)
■PC Card Slot	One PC Card Slot (type II)
■Multimedia Input Port	One TV Tuner Module connector (Coaxial cable, RCA Audio Input Jacks, RCA Video Input Jack supported)

▼ Battery Pack / AC Adapter

■Battery Pack	● Li-ion Rechargeable Battery Model: BATEDX20L4 SANYO P/N: 4UR18650F-CPL-EDX20
■Feature	
■Adapter AC-Input / DC-Output	

▼ BIOS

■PnP Function	AMI PnP BIOS
■Self Test	Power On Self Test
■Auto Detection	DRAM auto-detection, auto-sizing L2 Cache auto-detection Hard disk type auto-detection
■Power Management	APM 1.2 (Advanced Power Management) & ACPI 2.0 (Advanced Configuration Power Interface) Smart Power ®
■Security	Two Level Password Protections
■Other Features	32bit access, Ultra DMA, PIO5 Mode support Multi-boot capability

■O/S	Support: Microsoft Windows 2000 / XP Compatible: Microsoft Windows 95/ 98/ 98SE/ ME/ NT4.0

▼ Physical Specification

■Dimension	For 16”-LCD model: 350 (W) x 290 (D) x 40.5 (H) mm For 15.4”-LCD model: 350 (W) x 290 (D) x 38.5 (H) mm
■Weight	For 16”-LCD model: 7.5 lbs / 3.4 KG (with CD-ROM) For 15.4”-LCD model: 7.3 lbs / 3.3 KG (with CD-ROM)
■Environmental Limits	Operating Temperature: 5 to 35^{oC} (41 to 95^{oF}) Operating Humidity: 20 to 90 percent RH (5 to 35^{oC}) Storage Temperature: -20 to 50^{oC} (-4 to 122^{oF})

A P P E N D I X ▼ B

AGENCY REGULATORY NOTICES

Federal Communications Commission Notice

This equipment has been tested and found to comply with the limits for a Class B digital device, pursuant to Part 15 of the FCC Rules. These limits are designed to provide reasonable protection against harmful interference in a residential installation. This equipment generates, uses, and can radiate radio frequency energy and, if not installed and used in accordance with the instructions, may cause harmful interference to radio communications. However, there is no guarantee that interference will not occur in a particular installation. If this equipment does cause harmful interference to radio or television reception, which can be determined by turning the equipment off and on, the user is encouraged to try to correct the interference by one or more of the following measures:

- Reorient or relocate the receiving antenna.
- Increase the separation between the equipment and the receiver.
- Connect the equipment into an outlet on a circuit different from that to which the receiver is connected.
- Consult the dealer or an experienced radio or television technician for help.

Modifications

The FCC requires the user to be notified that any changes or modifications made to this device that are not expressly approved by the Manufacture may void the user's authority to operate the equipment.

Connections to Peripheral Devices

Connections to this device must be made with shielded cables with metallic RFI/EMI connector hoods to maintain compliance with FCC Rules and Regulations.

Declaration of Conformity

This device complies with Part 15/68 the FCC Rules. Operation is subject to the following two conditions: (1) this device may not cause harmful interference, and (2) this device must accept any interference received, including interference that may cause undesired operation.

European Notice

Products with the CE Marking comply with both the EMC Directive (89/336/EEC) and the Low Voltage Directive (73/23/EEC) and R&TTE Directive (1999/5/EC) issued by the Commission of the European

Community.
Compliance with these directives implies conformity to the following European Norms:

- EN55022 (CISPR 22) Radio Frquency Interference
- EN50082 (IEC801-2, IEC801-3, IEC801-4) Electro-magnetic Immunity
- EN 300 328-2 (ETS 300 328) Radio Spectrum Matter.
- TBR21 (ETS TBR21) Terminal Equipment.
- EN60950 (IEC950) I.T.E. Product Safety

Canadian Notice
This digital apparatus does not exceed the Class B limits for radio noise emissions from digital apparatus as set out in the radio interference regulations of the Canadian Department of Communications.

Le present appareil numerique nemet pas de bruits radioelectriques depassant les limites applicables aux appareils numeriques de Classe B prescrites dans le reglement sur le brouillage radioelectrique edicte par le Ministere des Communications du Canada.

Power Cord Requirement
The power cord supplied with the AC adapter should match the plug and voltage requirements for your local area. Regulatory approval for the AC adapter has been obtained using the power cord for the local area. However, if you travel to a different area and need to connect to a different outlet or voltage, you should use one of the power cords listed below. To purchase a power cord (including one for a country not listed below) or a replacement ac adapter, contact your local dealer.

U.S. and Canada

- The cord set must be UL-Listed and CSA-Certified or C-UL Listed.
- The minimum specifications for the flexible cord are (1) No. 18 AWG, (2) Type SJ, and (3) 3-conductor.
- The cord set must have a rated current capacity of at least 10 A.
- The attachment plug must be an earth-grounding type with a NEMA 5-15P (15A, 125V) or NEMA 6-15P (15 A, 250V) configuration.

Japan

- All components of the cord set (cord, connector, and plug) must bear a `PSE` mark and registration number in accordance with the

Gemtek declares that WMIA-123AG (FCC ID: MXF-M930907) is limited in CH1~CH11 for 2.4GHz by specified firmware controlled in U.S.A.

Japanese Dentori Law.

- The minimum specification for the flexible cord are: (1) 0.75 mm2 conductors, (2) Type VCT or VCTF, and (3) 3-conductor.
- The cord set must have minimum rated current capacity of 7 A.
- The attachment plug must be a two-pole, grounded type with a Japanese Industrial Standard C8303 (15 A, 125 VAC) configuration.

Other Countries

- The cord set fittings must bear the certification mark of the agency responsible for evaluation in a specific country. Acceptable agencies are:

  BSI (UK)
  OVE (Australia)
  CEBEC (Belgium)
  SEMKO (Sweden)
  FIMKO (Finland)
  DEMKO (Denmark)
  NEMKO (Norway)
  SETI (Finland)
  EANSW (Australia)
  SEV (Switzerland)
  IMQ (Italy)
  UTE (France)
  CCC (China)
  PSB (Singapore)
  PSE (Japan)
  BSMI (Taiwan)
  B (Polish)

- The flexible cord must be of a HAR (harmonized) type HO5VV-F 3-conductor cord with a minimum conductor size of 0.03 square inches.
- The cord set must have a current capacity of at least 10 A and a nominal voltage rating of 125 / 250 VAC.

CAUTION: MODEL 766NSx IS DESIGNED TO USE WITH THE FOLLOWING AC ADAPTER MODEL ONLY
Manufacture: LITE-ON ELECTRONICS, INC.
Model: PA-1161-02 (160W)

Telephone lines requirement

■ The appropriate utilization of 26AWG telephone line cord on unit.

CAUTION: Always disconnect all telephone lines from the wall outlet before servicing or disassembling this equipment.

CAUTION: To reduce the risk of fire, use only No. 26AWG or larger telecommunication line cord.

Battery Pack Safety

- The battery pack is intended to use only with this notebook.
- Do not disassemble the pack.
- Do not dispose of the battery pack in fire or water.
- To avoid risk of fire, burns, or damage to your battery pack, do not allow a metal object to touch the battery contacts.
- Handle a damaged or leaking battery with extreme care. If you come in contact with the electrolyte, wash the exposed area with soap and water. If it contacts the eye, flush the eye with water for 15 minutes and seek medical attention.
- Do not charge the battery pack if the ambient temperature exceeds 45℃ (113℉).
- To obtain a replacement battery, contact your local dealer.
- Do not expose the battery pack to high storage temperatures (above 60℃, 140℉).
- When discarding a battery pack, contact your local waste disposal provider regarding local restrictions on the disposal or recycling of batteries.
- Use only supplied AC Adapter for charging.

CAUTION: Danger of explosion if battery is incorrectly replaced. Replace only with same or equivalent type recommended by the manufacturer. Discard used batteries according to the manufacturer`s instructions or local laws.

VORSICHT! Explisionsgefahr bei unsachgernazen Austausch der Batterie. Ersatz nur durch denselben oder einem vom Hersteller empfohlenem ahnlichen Typ. Entsorgung gebrauchter Batterien navh Angaben des Herstellers.

Laser Safety

The optical drive used with this computer is certified as a Class 1 laser device according to the U.S. Department of Health and Human Services (DHHS) Radiation Performance Standard and International Standards IEC 825 / IEC 825-1 (EN60825 / EN60825-1). The device is not considered harmful, but the following precautions are recommended:

- Do not open the unit.
- Avoid direct exposure to the laser beam.
- If the unit requires service, contact an authorized service center.
- Ensure proper use by reading and following the instructions carefully.
- Do not attempt to make any adjustment of the unit.

CLASS 1 LASER PRODUCT
APPAREIL A LASER DE CLASSE 1
LASERSCHUTZKLASSE 1 PRODUKT

Warning!

Do not attempt to disassemble the cabinet containing the laser. The laser beam used in this product is harmful to the eyes. The use of optical instruments, such as magnifying lenses, with this product increase the potential hazard to your eyes. For your safety, have this equipment serviced only by an authorized service provider.

LED (Infrared) Safety

The infrared port located on the left side of this computer is classified as a Class 1 LED (light-emitting diode) device according to International Standard IEC 825-1 (EN60825-1). This device is not considered harmful, but the following precautions are recommended:

- Do not attempt to view the infrared LED beam with any type of optical device.
- Do not attempt to make any adjustment of the unit.
- If the unit requires service, contact an authorized service center.
- Avoid direct eye exposure to the infrared LED beam. Be aware that the beam is invisible light and cannot be seen.

CLASS 1 LED PRODUCT
LEDSCHUTZKLASSE 1 PRODUKT

Lithium battery warning
This computer contains a lithium battery to power the clock and calendar circuitry.

CAUTION: Danger of explosion if battery is replaced incorrectly. Replace only with the same or equivalent type recommended by the manufacturer. Discard used batteries according to the manufacturer's instructions.

ATTENTION: Il y a danger d'xplosion s'il y a remplacement incorrect de la batterie. Remplacer uniquement avcc unc batterie du meme type ou d'un type recommande par le constructer. Mettre au rebut les batteries usagees conformement aux instructions du fabricant.

VORSICHT! Explosionsgefahr bei unsachgemBen Austausch der Batterie Ersatz nur durch denselben oder einem vom Hersteller empfohlenem ahnlichen Typ. Entsorgung gebrauchter Batterien nach Angaben des Herstellers.

Der Arbeitsplatzbezogene Schalldruckpegel nach DIN 45 635 betragt 70dB (A) oder weniger.

Zum Netzanschlua dieses Gerates ist eine geprufte Leitung zu verwenden. Fur einen Nennstrom bis 6A und einem Geratégewicht groBer 3kg ist eine Leitung nicht leichter als H05VV-F, 3G, 0.75mm2 einzusetzen.

Die Steckdose muB nahe dem Gerat angebracht und leicht zuganglich sein.

Federal Communication Commission Interference Statement

This equipment has been tested and found to comply with the limits for a Class B digital device, pursuant to Part 15 of the FCC Rules. These limits are designed to provide reasonable protection against harmful interference in a residential installation. This equipment generates, uses and can radiate radio frequency energy and, if not installed and used in accordance with the instructions, may cause harmful interference to radio communications. However, there is no guarantee that interference will not occur in a particular installation. If this equipment does cause harmful interference to radio or television reception, which can be determined by turning the equipment off and on, the user is encouraged to try to correct the interference by one of the following measures:

- Reorient or relocate the receiving antenna.
- Increase the separation between the equipment and receiver.
- Connect the equipment into an outlet on a circuit different from that to which the receiver is connected.
- Consult the dealer or an experienced radio/TV technician for help.

FCC Caution: Any changes or modifications not expressly approved by the party responsible for compliance could void the user's authority to operate this equipment.

For operation within 5.15 ~ 5.25GHz frequency range, it is restricted to indoor environment.

This device complies with Part 15 of the FCC Rules. Operation is subject to the following two conditions: (1) This device may not cause harmful interference, and (2) this device must accept any interference received, including interference that may cause undesired operation.

IMPORTANT NOTE:

FCC Radiation Exposure Statement:

This equipment complies with FCC radiation exposure limits set forth for an uncontrolled environment.

This device complies with FCC RF Exposure limits set forth for an uncontrolled environment, under 47 CFR 2.1093 paragraph (d)(2).

This transmitter must not be co-located or operating in conjunction with any other antenna or transmitter.

MAXIMUM AVERAGE SAR (1g) (FOR 802.11b) is 0.322W/kg.
MAXIMUM AVERAGE SAR (1g) (FOR 802.11g) is 0.221W/kg.
MAXIMUM AVERAGE SAR (1g) (FOR 802.11a) is 0.370W/kg.