Assure Lock 2 Plus

Key-Free YRD450-N

Download Yale Access App

Create an account if you don't already have one, and tap "Set Up a Device".

Note: If you have an account with the August App, use the same username and password for the Yale Access App.

Install and Set Up Your Lock

Follow the step-by-step Installation and Setup Guide in this manual, or refer to the app installation guide with helpful videos.

Note: If you use the app, please tear off the Door Checker and the Marking Template (pages 5-8) to use when prompted.

Use Your Lock

Operate your lock with your phone, issue permanent or temporary entry codes and more. Withome key, lock or unlock your lock with iPhone® or Apple Watch®.

⚠ All key-free locks should only be installed on homes with more than one point of entry.

Contents

In the Box 4
Door Checker 5
Marking Templates 7
Installation and Setup Guide 9
- Remove Existing Deadbolt 10
- Check Door Measurements 11
- Make or Adjust Holes 12
- Install Deadbolt Latch 13
- Install Exterior Keypad 14
- Install Mounting Plate 15
- Attach Wire Cable to Interior Lock 16
- Install Interior Lock 17
- Test Thumbturn 18
- Install Yale Smart Module (Optional) 19
- Install DoorSense (Optional) 20
- Install Batteries and Set Up with App 23
- Set Up HomeKit and Home Key (iOS Only) 24
- Set Up and Manage Entry Codes 25

Using Your Lock 26
- Connecting to Your Lock 27
- LED Alerts 28
- Resetting Your Lock to Factory Defaults 29
- Features 30
- App Settings 31
- Lock Operations Troubleshooting 33
- Hardware Troubleshooting 35

P/N YRD450-N-MNL-0039 Rev A

In the Box

Lock

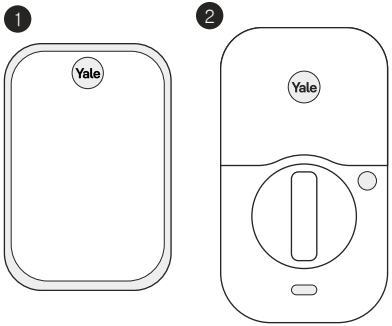

Hardware

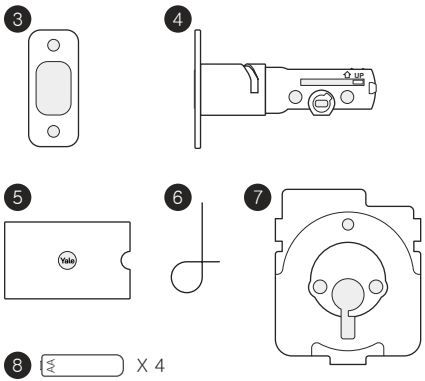

Add-Ons

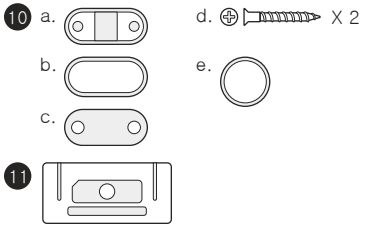

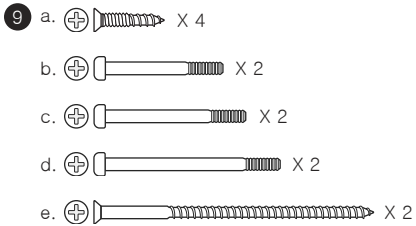

P/N YRD450-N-MNL-0039 Rev A

1. Exterior Keypad
2. Interior Lock
3. Strike Plate
4. Adjustable Deadbolt
5. Manual
6. Reset Pin
7. Mounting Plate
8. AA Batteries
9. Screws
   a. Strike Plate and Deadbolt Screws
   b. Teal Screw Set B
   c. Black Screw Set C
   d. Silver Screw Set D
   e. Optional Security Strike Plate Screws
10. DoorSense
    a. Housing
    b. Cover
    c. Mounting Tape
    d. Screws
    e. Flush Mount Cap
11. Smart Module
    (Included with select models)

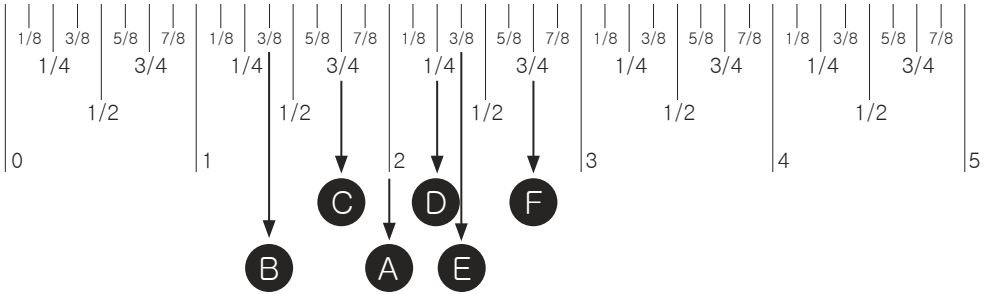

Tear Along the Dotted Line

Door Checker Part 1

See Reverse for Part 2 →

Measure Clearance

✓ Greater than A

✕ Less than A
(Your door is not a match)

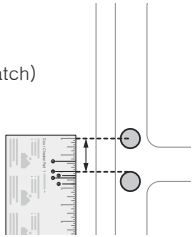

A. 2” minimum clearance between top of the door knob and center of deadbolt hole.

Measure Door Thickness

✓ B, C or D

✕ Less than B or greater than D
(Your door is not a match)

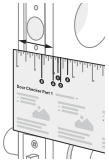

B. 1-3/8” door thickness; use teal (shortest) screws.

C. 1-3/8” - 1-3/4” door thickness; use black (medium) screws.

D. 1-3/4” - 2-1/4” door thickness; use silver (longest) screws.

Measure Backset

✓ Equals E or F

✕ Doesn’t equal E or F
(Your door is not a match)

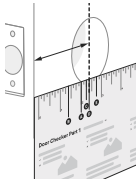

E. 2-3/8” backset, use out of box latch setting.

F. 2-3/4” backset, adjust latch setting (Step 2, point 1 of this manual).

P/N YRD450-N-MNL-0039 Rev A

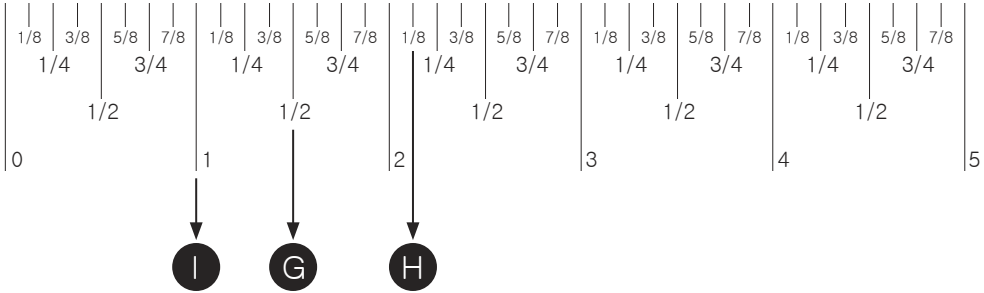

Door Checker Part 2

See Reverse for Part ↑

Measure Face Bore

✓ Equals G or H

✎ Less than G
(Adjust diameter to G or H)

✕ Greater than H
(Your door is not a match)

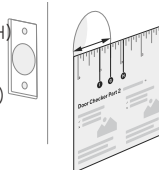

Measure Edge Bore and Strike Pocket

✓ Equals I

✎ Less than I
(Adjust diameter to I)

✕ Greater than I
(Your door is not a match)

Door (Edge Bore)

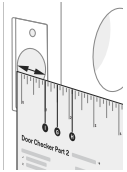

Frame (Strike Pocket)

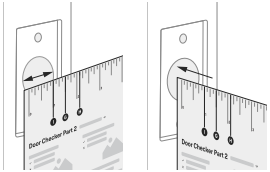

Diameter Depth

G. 1-1/2" face bore diameter.

H. 2-1/8" face bore diameter.

I. 1" edge bore diameter;

1" strike pocket diameter and depth.

⚠ Minimum strike pocket depth is 1".

Tear Along the Dotted Line

Marking Template for 2-1/8” (54mm) Face Bore

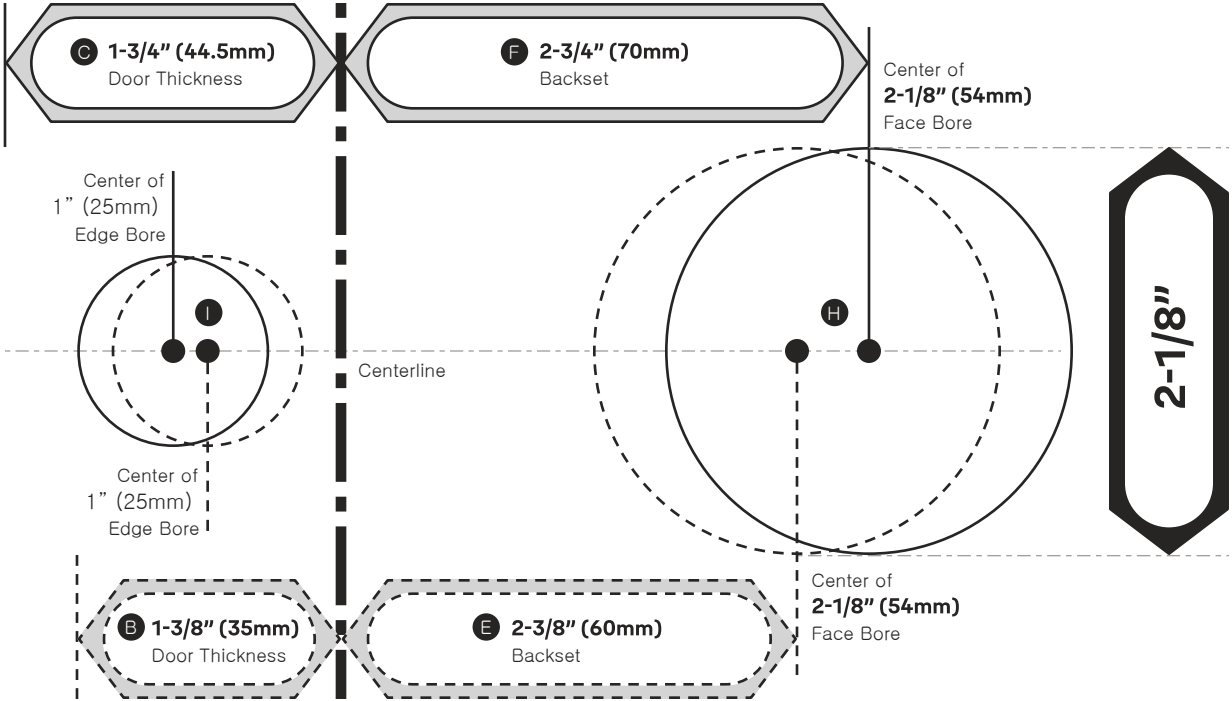

Tear Along the Dotted Line

P/N YRD450-N-MNL-0039 Rev A

Marking Template for 1-1/2” (38mm) Face Bore

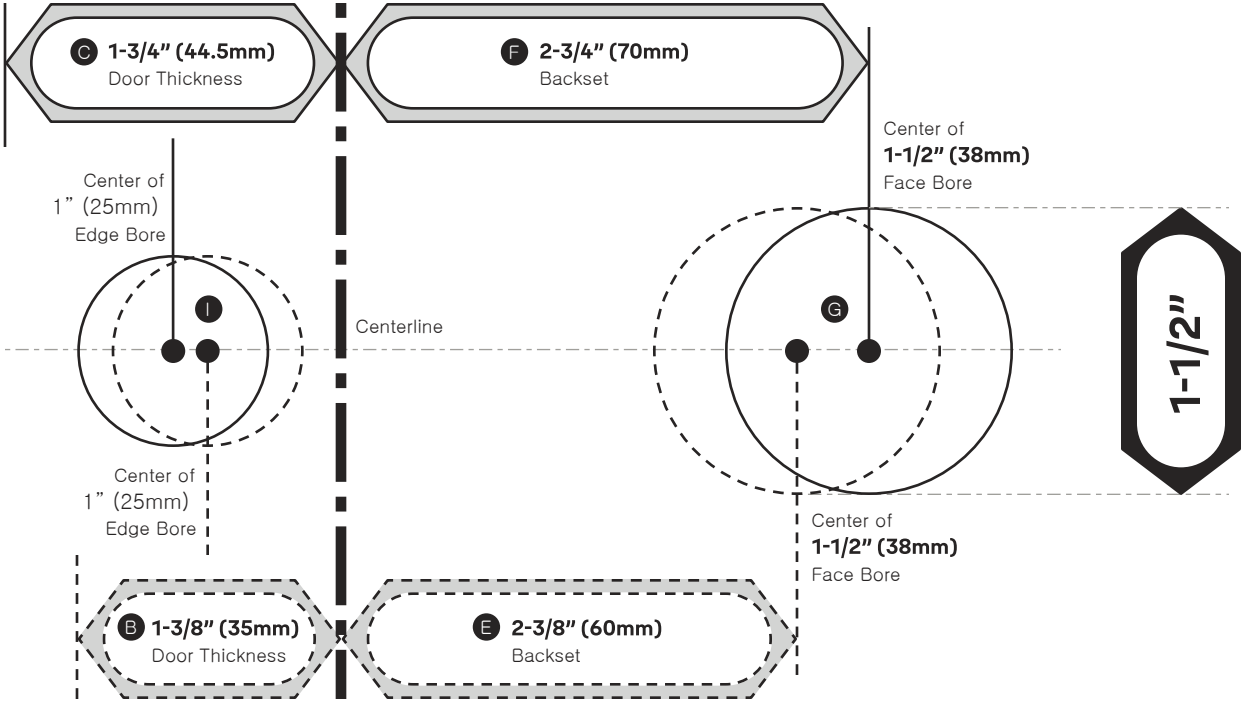

P/N YRD450-N-MNL-0039 Rev A

Tear Along the Dotted Line

Installation and Setup Guide

Required Tools

1

2

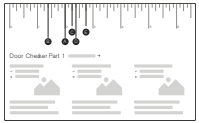

You Might Also Need

3

4

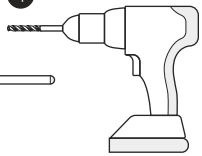

6

5

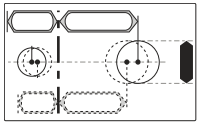

7

8

9

1. Phillips Head Screwdriver
2. Door Checker
   (tear off pages 5-6 of this manual)
3. Tape Measure
4. Drill
5. Marking Template
   (tear off pages 7-8 of this manual)
6. Pencil
7. Wood Mortise Chisel
8. Utility Knife
9. Level

⚠ Failure to follow the Installation Guide precisely could result in damage to the product, voiding the factory warranty, and could lead to failure of the product to provide access.

1a Remove Existing Deadbolt

If you have a new door, please proceed to step 1b.

If you have a deadbolt on your door, use the diagram to help you remove it.

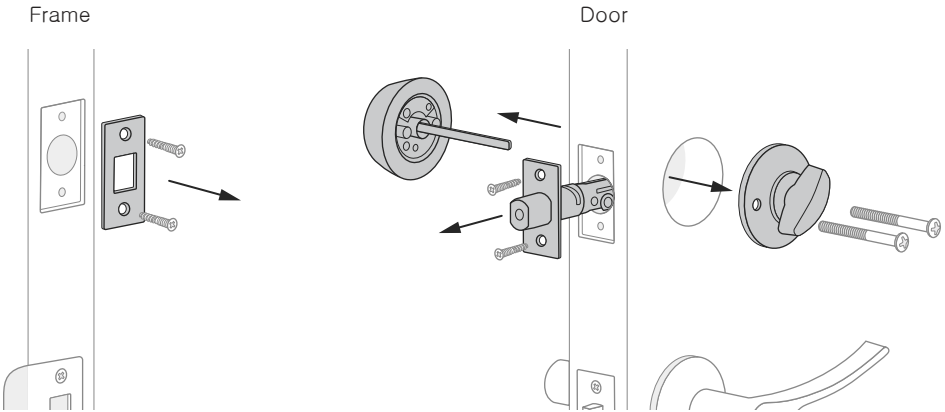

⚠ Keep your old deadbolt until your new lock has been successfully installed.

1b Check Door Measurements

If your door doesn't have holes, please proceed to step 1c.

Tear off the Door Checker (pages 5-6) and follow the guidelines on both sides to measure each aspect of your door and frame. There are some cases when existing holes cannot be adjusted to be compatible.

If you need to make adjustments, go to step 1c and find the closest match to each aspect of your door on the Marking Template.

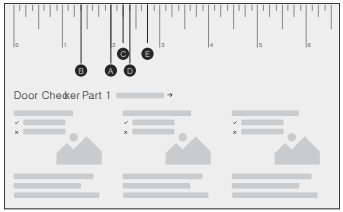

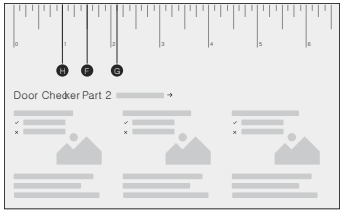

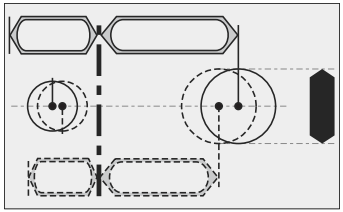

Please do not drill any holes until you confirm that your door is compatible.

If you have confirmed that the existing holes are compatible with your new lock, please proceed to step 2 (skip step 1c).

1c Make or Adjust Holes

Skip this step if you have confirmed that the existing holes are compatible (step 1b).

1. Tear off the Marking Template (pages 7-8), and choose the preferred face bore diameter (2-1/8" or **1-1/2"**) on either side of the template.

2. Tape the Marking Template onto the door as shown.

3. Check the door thickness. It should match either the shape with solid outlines (**1-3/4"**), or the one with dashed outlines (**1-3/8"**).
   3a. Use solid lines as a template for **1-3/4"** door thickness.
   3b. Use dashed lines for **1-3/8"** door thickness.

4. Choose your preferred backset. It should match either the shape with solid outlines (**2-3/4"**), or the one with dashed outlines (**2-3/8"**).
   4a. Use solid lines as a template for **2-3/4"** backset.
   4b. Use dashed lines for **2-3/8"** backset.

5. Drill holes in your door where marked.

6. On the door frame, align the center of the strike plate with the center of the edge bore. Trace the strike plate, then chisel to the depth of the strike plate so it sits flush with your door frame. Drill the 1" diameter strike pocket with a minimum depth of 1".

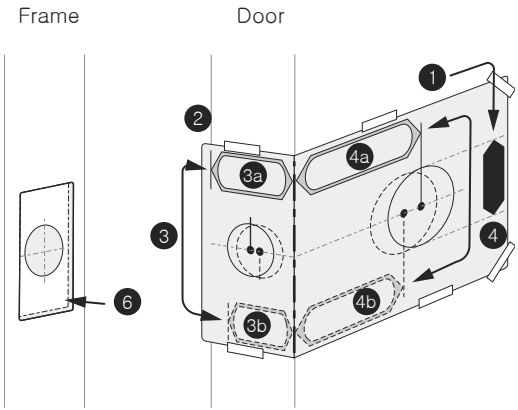

2 Install Deadbolt Latch

1. Correct deadbolt length is based on the backset. Refer to measurements E andF on theDoor Checker(page 5) to verify backset.

⚠ Minimum strike pocket depth is 1”.

E 2-3/8” Backset
(Out of box)

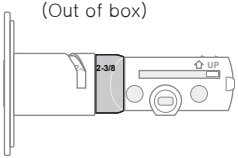

F 2-3/4” Backset
(To adjust, twist neck by holding the body stable)

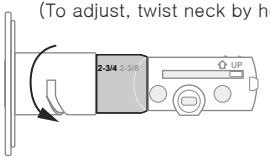

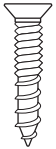

x 2 for Deadbolt Latch
x 2 for Strike Plate
(Actual size)

2. Align strike plate with deadbolt latch.
   2a. (Optional) Security screws can be used in place of the small strike plate screws.
3. Make sure UP arrow on the deadbolt is facing upwards.
4. Deadbolt latch must be in an unlocked position.
   Note: If the deadbolt latch is extended, use a small flathead screwdriver to rotate slot until deadbolt latch is retracted.

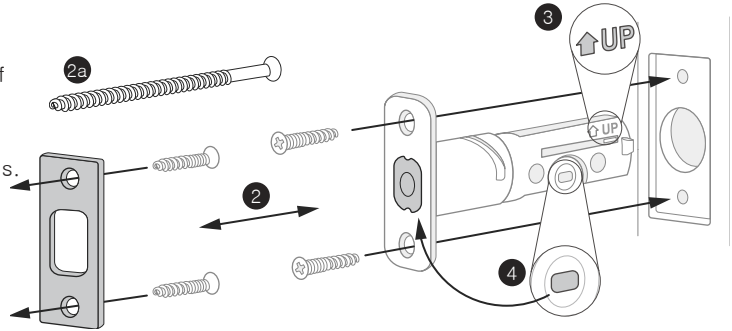

3 Install Exterior Keypad

1. Refer to measurements G and H on the Door Checker (page 6) to measure face bore hole. If the hole is **less than 2-1/8"** (H), remove adapter by twisting it off the body of the lock.

   Note: Removing the adapter might also help if your face bore and edge bore are of irregular shape or are not properly aligned.

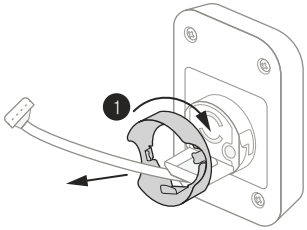

> ⚠ Install your lock with the door open.
> Do not close your door until all the steps are completed.

2. Remove the plastic cover from the keypad.

3. Make sure your deadbolt latch is in an unlocked position. Refer to step 2, point 4 (page 13) for guidance on how to retract it, if needed.

4. Guide the wire cable under the deadbolt.

5. Slide the keypad in place, making sure it's on the exterior part of your door.

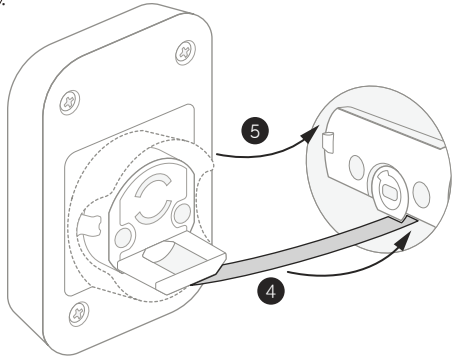

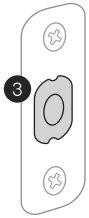

4 Install Mounting Plate

1. Refer to measurements B, C, and D on the Door Checker (page 5) to select screws.

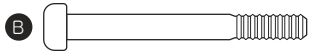

x 2 Teal Screws (1-3/8" door thickness)

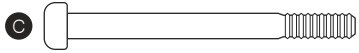

x 2 Black Screws (1-3/8" - 1-3/4" door thickness)

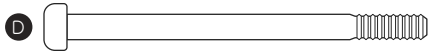

x 2 Silver Screws (1-3/4" - 2-1/4" door thickness)

2. Route the wire cable into the designated slot in the mounting plate. You may have to squeeze the cable slightly in order for it to pass through.
3. Guide posts of the mounting plate into the holes on the exterior keypad.
4. Tighten screws with a screwdriver to secure the mounting plate. As you tighten the screws, make sure the mounting plate and the keypad are straight.

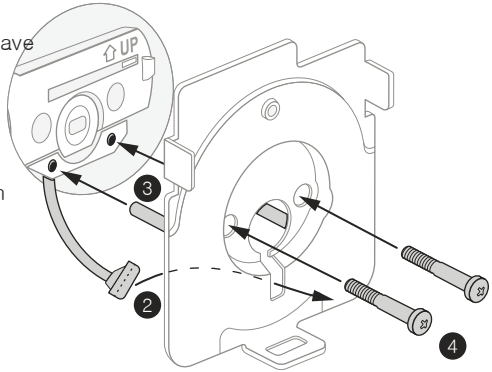

⚠ With the mounting plate installed, ensure that the wire cable is not pinched to prevent it from reducing your lock's battery life.

5 Attach Wire Cable to Interior Lock

1. Remove battery cover by pulling it upwards off the body of the interior lock.

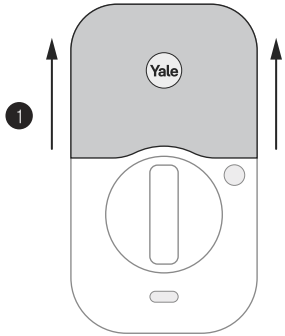

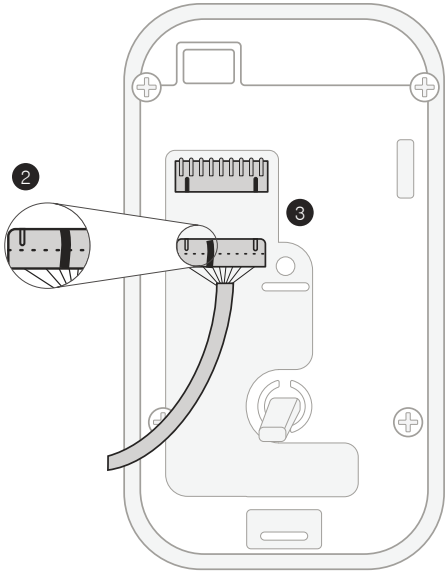

2. Make sure the side of the cable end with the ridges and the marked line faces outward.

3. Push cable into the designated slot until you hear a click.

6 Install Interior Lock

1. Make sure the tailpiece is in horizontal position. Use the thumbturn to adjust if needed.
2. Slide the tailpiece through the deadbolt latch slot.
3. Press the lock against the mounting plate, adjusting its position until it clicks into place and the bottom of the lock is held in place.
4. Tighten the one pre-installed screw.

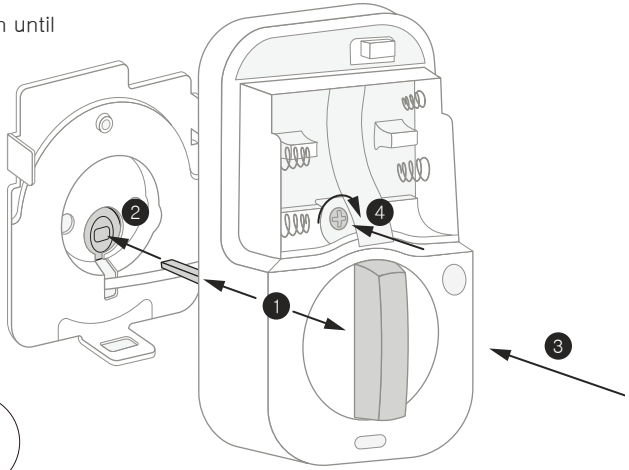

⚠ When fully tightened, lock should be flush to door.

7 Test Thumbturn

If deadbolt latch does not lock or unlock with thumbturn (from the inside):

- Ensure that the deadbolt latch is centered in the face bore hole;
- Ensure that the tailpiece is positioned horizontally and inserted through deadbolt latch slot (step 6, point 2).

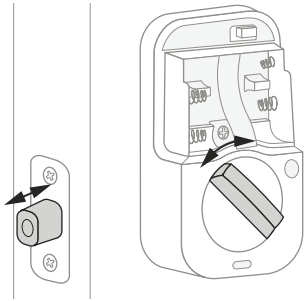

Smooth deadbolt latch operation will enhance your battery life.

8 Install Yale Smart Module (Optional)

If your lock model does not include a Smart Module, please proceed to step 9a.

Insert Yale Smart Module into the designated slot at the top of the body of the lock.

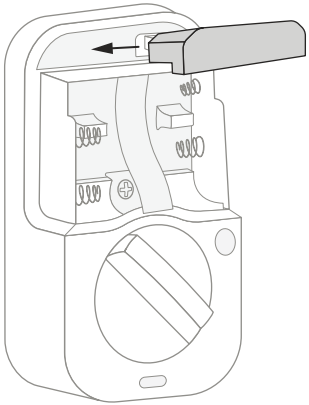

Note: If you purchased your module separately, check compatibility with your Assure 2 Plus. See table below for the list of compatible modules.

AYR-MOD-WF1-USA	Wi-Fi Module

⚠ Batteries mustnot be installed when inserting or removing Yale Smart Module.

9a Install DoorSense (Optional)

If you do not wish to install DoorSense, please proceed to step 10. →

DoorSense is a magnetic sensor installed on your door frame that can keep track of when the door is opened and closed.

For surface mount instructions, please proceed to step 9b. →

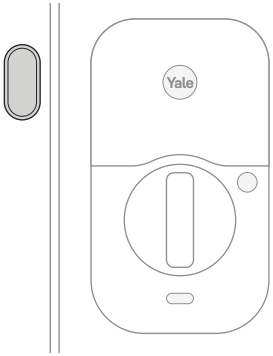

Surface mount is a quick and easy option to secure DoorSense on the inside of your door frame.

For flush mount instructions, please proceed to step 9c. →

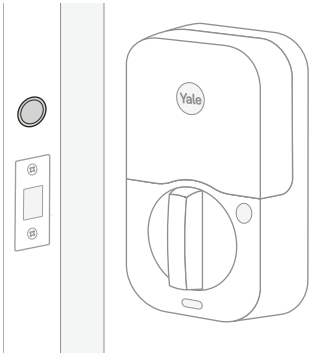

Flush mount is installing DoorSense into the edge of the door frame. It provides a cleaner look with more robust performance but requires drilling.

9b DoorSense Surface Mount

1. Remove one side of the backing from the adhesive.
2. Attach tape to the back of the DoorSense, ensuring it is aligned with the edges of the device and the screw holes.
3. Remove the remaining backing from the adhesive.
4. Determine mounting location. For optimal performance, DoorSense should be mounted within 1-1/2" from the edge of your door frame.

   Note: DoorSense will still work if placed on curved or angled trim moulding around the door frame as long as it is within 1-1/2" from the edge.
5. Ensure DoorSense is in proper position by center aligning it with the Yale logo on the battery cover, and adhere it to the door frame.
6. Tighten pre-installed screws and attach cover.

> ⚠ It is recommended to complete the last step after your lock is calibrated with the app to ensure you are able to retrieve accurate door state readings before modifying your frame.

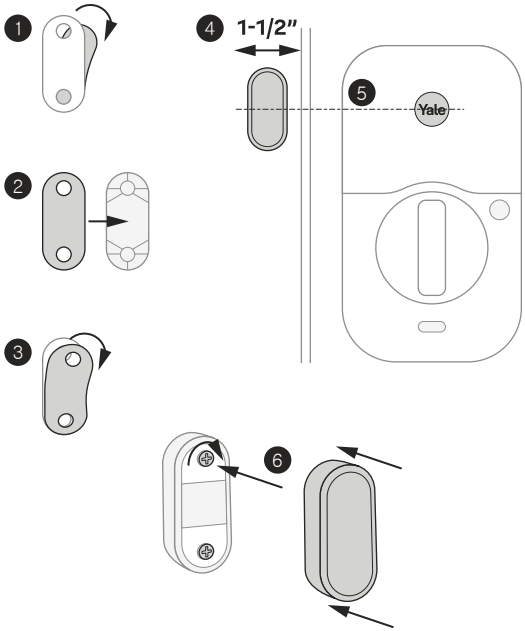

9c DoorSense Flush Mount

1. Take off DoorSense cover.
2. Push the magnet out of the housing.
3. Expose the adhesive on the magnet cap by removing the blue backing.
4. Press the magnet onto the cap so that the notches interlock.
5. Determine mounting location on the door frame. The distance from the center of the strike plate to the center of the DoorSense should be 2”, making the DoorSense in line with the logo on the battery cover of the lock.
6. Mark a hole that’s horizontally centered on the door frame and is 5/8” in diameter.
7. Drill a 1/2” deep hole where marked.
8. Insert DoorSense into the hole.

Note: If it is too snug to push in by hand, protect the frame with a piece of scrap wood and use light blows with a hammer or mallet. If it is too loose, try wrapping tape around it so that it fits snugly.

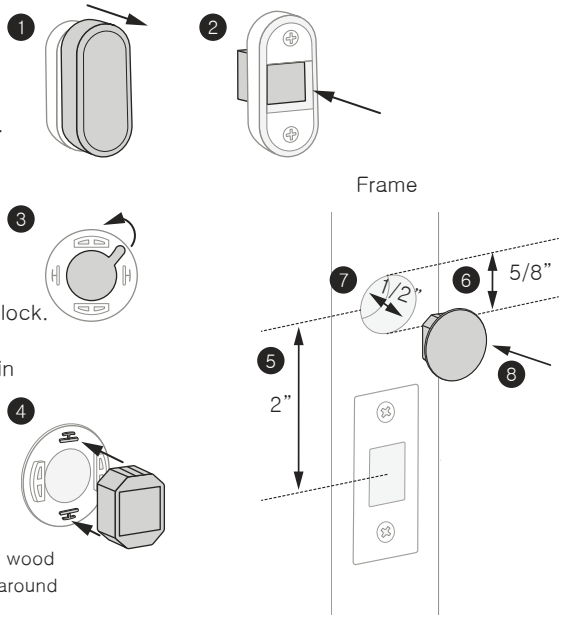

10 Install Batteries and Set Up with App

⚠ Make sure you have Yale Access App downloaded and an account created. Once batteries are inserted, lock is ready to be set up with the app.

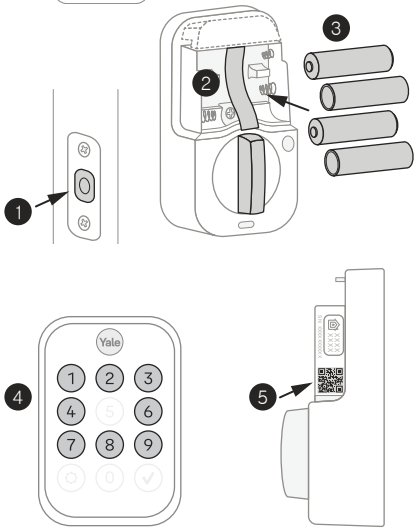

1. Before installing batteries, make sure the deadbolt latch is unlocked.
2. Place ribbon behind batteries for easy battery removal.
3. Install 4 batteries.
4. Once batteries are inserted, the entire keypad will light up in a clockwise pattern. Once this happens, the lock is in pairing mode. Open Yale Access App, tap on “Set Up a Device”, and follow the in-app setup instructions.
   Note: If the lock exits pairing mode, simply press the Yale logo to restart.
5. With the battery cover off, locate the setup QR code on the side of the lock. Scan it when prompted by the app.
   Note: The setup QR code can also be found on the quick start guide.

11 Set Up HomeKit and Home Key (iOS Only)

Home key allows you to tap your smart lock with your iPhone® or Apple Watch® to lock or unlock your door the same way you'd tap to use Apple Pay®.

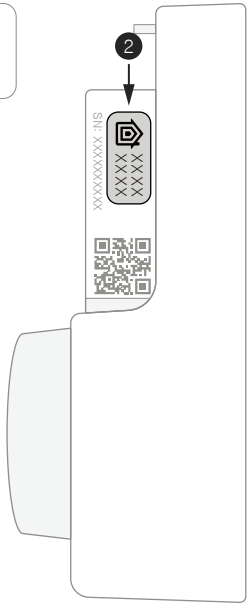

⚠ To use home keys, iPhone XS or later with iOS 15 or later or Apple Watch Series 4 or later with watchOS 8 or later are required.

1. To enable home key, make sure your lock is installed and set up with Yale Access app.

2. To begin setup, you'll need access to the 8-digit HomeKit accessory code located on the side of the lock under the battery cover. Follow the instructions in the Yale Access app to set up HomeKit and home key.

   Note: If you have HomePod®, HomePod mini®, or Apple TV® set up as a home hub, make sure they are online and connected for successful HomeKit setup.

3. To share home keys with others, open Apple Home app and select Home Settings.

   Note: Sharing access to your lock in Home app with others and controlling this HomeKit-enabled accessory automatically and away from home requires a HomePod®, HomePod mini®, or Apple TV® set up as a home hub.

12 Set Up and Manage Entry Codes

You can create and manage entry codes from the Guest List tab of the Yale Access app.

⚠ You must have Bluetooth or Wi-Fi connection with the lock to create or manage entry codes. Your changes will be pending until you do have connection with the lock.

1. To create a code for a new user, tap on “Invite”, then select whether they should also have app access or only entry code access. While inviting them, you will be able to create an entry code.
2. Tap on existing users in Guest List to create new entry codes for them or manage existing ones.

Using Your Lock

Exterior Keypad

To lock your door

- With home key
  Tap with iPhone® or Apple Watch®*
- One-Touch Locking
  Press Yale

To unlock your door

- With home key
  Tap with iPhone or Apple Watch*
- With entry code
  Press Yale →
  Enter entry code →
  Press ✓

Interior Lock

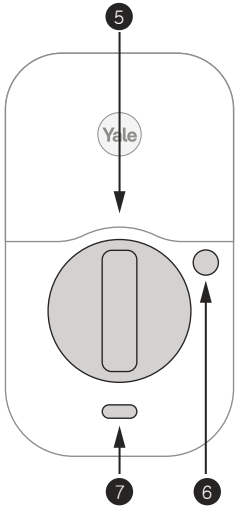

1. Wake / One-Touch Locking
2. Warnings / Menu
3. Submit Entry Code
4. **9-Volt Battery Backup**
   (See page 33 for instructions for if batteries are drained)
5. Thumbturn
6. Passage Button
7. Interior LED Indicator

* Works with iPhone XS or newer (iOS 15 or later), and Apple Watch Series 4 or newer (WatchOS 8 or later).

P/N YRD450-N-MNL-0039 Rev A

Connecting to Your Lock

There are two possible ways to connect to your lock with your Yale Access app. When you're near your lock you can connect through Bluetooth, and if you have an optional module you can connect remotely through Wi-Fi.

With Bluetooth connection, you can use your app to lock, unlock, create or manage entry codes, change settings, see who used the lock, etc. while you're within Bluetooth range of the lock. Every Assure Lock 2 has Bluetooth built in.

With Wi-Fi connection, you can be away from home and use your app to operate your lock, monitor who's coming and going, and create or manage entry codes. To connect your lock to your Wi-Fi network, you will need a module (available with select models and sold separately). See step 8 for compatible modules.

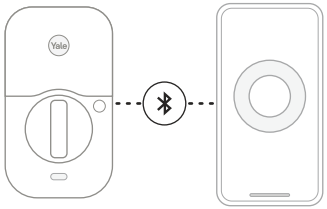

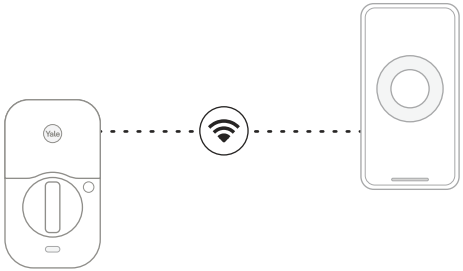

LED Alerts

Exterior Keypad Alerts	
Gear flashes amber	Low battery level 1
Gear flashes red	Low battery level 2
Gear flashes red, then stays red	Low battery level 3
Checkmark flashes	Pairing success
Any key, then gear flash red	Jammed lock
Gear flashes white	Pairing
Gear flashes red during pairing	Pairing failure

Interior Lock Alerts	
LED indicator flashes blue	Low battery levels 1, 2, and 3
LED indicator flashes red	Locked state
LED indicator flashes green	Unlocked state
LED indicator turns green for 3 seconds	Pairing success
LED indicator turns red for 3 seconds	Pairing failure
LED indicator intermittently flashes yellow	Passage Mode is on (see page 30)

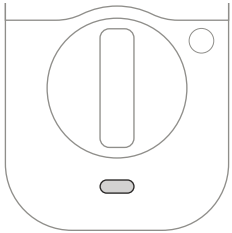

Resetting Your Lock to Factory Defaults

If you have set up your lock with Yale Access App, you should reset it using the app. Go to your lock's settings and choose "Factory Reset".

1. Remove one battery.
2. Insert reset pin into the designated reset hole.
3. Press and hold the reset pin.
4. While holding the reset pin, reinsert battery.
5. Keep holding the reset pin for 5 more seconds.
6. Take out the reset pin.

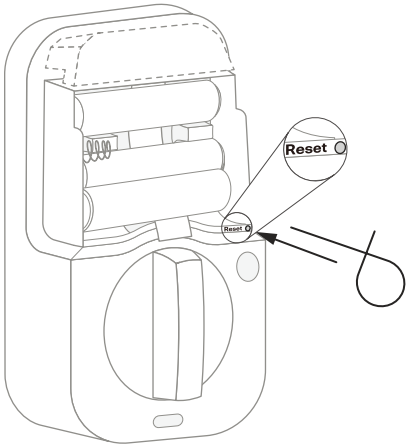

Features

DoorSense	· DoorSense keeps track of when your door is closed or open.
Home Key	· Home key allows you to tap your smart lock with your iPhone® or Apple Watch® to unlock your door the same way you'd tap to use Apple Pay®. You can also enable Express Mode to use your home key to unlock your door without waking or unlocking your device, or authenticating with Face ID, Touch ID, or your passcode. · The Power Reserve feature allows you to unlock your door with your iPhone® for up to five hours after the phone battery is drained. Express Mode must be enabled for the Power Reserve feature to work.
Entry Codes	· Entry codes are used to unlock your door. Create entry codes from the "Guest List" tab in the Yale Access App. · You can set permanent, recurring, and temporary entry codes. · An unlimited number of entry codes can be created or deleted as long as you have Bluetooth or Wi-Fi connection to the lock.
Auto-Lock	· Auto-Lock automatically locks the door for you. It can be set up in the lock settings of the app. · It can be set to lock on a timer for as short as 30 seconds, or as long as 30 minutes. · When using the Auto-Lock feature with DoorSense, your door will not lock until it is closed.
Auto-Unlock	· Auto-Unlock knows when you arrive and unlocks the door as you approach. It can be set up in the lock settings of the app.
Passage Mode	· Use passage mode when you want to disable Auto-Lock for an extended period of time. · Simply press and hold the Passage button on the inside of the lock until you hear a chime to turn it on. · To turn passage mode off, lock your door or press and hold the Passage button until you hear a chime.
Integrations	· Yale Access products work in harmony with some of your favorite smart home brands. · Integrations can be set up in the Yale Access App from the "Works With" menu option.

App Settings

You can find these and other settings in the Yale Access App.

Security	
Hide Entry Codes	If turned on, all entry codes within the app will be hidden from view.
Verified Access	If turned on, biometric/passcode authentication is required to operate the lock using the app.

Notifications	
Smart Alerts	Create alerts you wish to receive from the app.

Automation	
Auto-Lock	Door will automatically lock, either when door is closed (with DoorSense), or on a timer.
Auto-Unlock	Door will automatically unlock when you arrive home.
DoorSense	Allows you to know when your door is opened or closed.

Information	
Programming Code	This code is automatically created by the Yale Access App and used to access programming features: handing, Smart Module integration, and diagnostics. This code cannot be used to unlock the door. Find your programming code in the Yale Access App, enter this code on the keypad and press the gear symbol.

App Settings

You can find these and other settings in the Yale Access App.

Advanced Device Settings			
Device Settings	Volume	You can turn the lock volume on or off, and set it to high or low.	
	Inside Indicator Light	When turned on, it will show the active status (e.g. locked) of the lock. This light will also inform you when the batteries are low, passage mode is enabled, and pairing is successful.	
	One-Touch Locking	Lock the keypad by touching the Yale logo.	
Keypad Settings	Keypad Security	Shutdown Timing (Default: 60 sec)	The lock will shut down for the set period of time and not allow operation after the wrong code entry limit has been reached.
		Wrong Code Limit (Default: 5 times)	After the set number of unsuccessful attempts at entering a valid entry code, the lock will shut down and not allow operation for 60 seconds.
	Operating Mode	Normal (Default)	All entry codes will work and the lock can be unlocked and locked using the app and voice assistants.
		Vacation	When enabled, all entry code access will be restricted. Users can still lock and unlock the door with the app.

Lock Operations Troubleshooting

Lock does not respond.	· Press the Yale logo to activate the keypad. · Verify contact with the logo. · If keypad numbers are visible, check if they respond when pressed. · Check batteries are installed and oriented correctly in battery case. Replace batteries* if needed. · Check that the keypad wire is fully connected and not pinched.
Lock is on for a while then shows no reaction. Lights dim.	· Batteries do not have enough power. Replace batteries*.
Lock chimes indicating code acceptance but door will not open.	· Check for any foreign objects between door and frame. · Check that the wire is firmly connected to the interior lock.
Lock operates to allow access but will not automatically unlock.	· Check to see if Auto-Lock is enabled. · Disable Auto-Lock to lock the door manually.
Lock responds “Low Battery”.	· Replace all four (4) batteries* with new AA alkaline batteries.
Lock batteries are completely drained.	· Replace all four (4) batteries with new AA alkaline batteries. · If you need to operate the lock from the outside while batteries are drained, place a 9 volt alkaline battery against the contacts at the bottom of the lock. Wait for a moment, then press the logo to wake up the lock and enter your entry code while continuing to hold the battery in place.

* After replacing your batteries, it’s highly recommended to use your app to lock or unlock your device. This will allow the app to connect to the lock to ensure that the internal time of the device is correct.

Lock Operations Troubleshooting

Entry code will not register.	· If low battery indicator is lit, replace batteries*. · Verify that your entry code consists of 4 to 8 digits. · Make sure you are using different entry codes for different users. · Entry code must be entered while the keypad is active (tap on the Yale logo to wake it up and enter the entry code within 5 seconds).
Upon entering an entry code and pressing the Check key, the lock displays “Invalid Code” error or lock times out without responding.	· Verify entered code is a valid, previously programmed, 4 to 8 digit code. · Vacation mode might be on. Only an admin user can switch vacation mode to normal in the app.
Upon entering an entry code and pressing the Check key, lock responds “Wrong Number of Digits”.	· The digits entered were incorrect or incomplete. Re-enter the correct code followed by the Check key.
Deadbolt does not extend when locking the door with the keypad.	· Lock was not handed properly. Find the setting called “Lock Handing” to fix this issue.
Lock operates but makes no sound.	· Check in the app settings if volume is set to off.

* After replacing your batteries, it’s highly recommended to use your app to lock or unlock your device. This will allow the app to connect to the lock to ensure that the internal time of the device is correct.

Hardware Troubleshooting

Deadbolt grinds and will not extend to lock when using an entry code but thumbturn locks and unlocks smoothly.	· Lock was not handed properly. Find the setting called “Lock Handing” to fix this issue.
Deadbolt is hitting the strike plate.	· Reposition the strike plate to align with deadbolt.
Deadbolt is not fully extending.	· Increase depth of the deadbolt strike pocket in the frame.
Resistance when locking deadbolt that requires pushing or pulling on the door to align deadbolt and latch.	Adjust your existing knob, lever, or handleset strike plate. Latch engagement into the strike is the main component used for door alignment. To adjust knob / lever / handleset strike plate: 1. Remove plate from door frame with a hand screwdriver. Note: using an electric driver may strip screw heads or enlarge screw holes. 2. Locate tab on strike plate. Bend the tab towards surface of strike. Note: a small change may be all that is required. 3. Reinstall strike plate using a screwdriver and test again. 4. If door cannot be adjusted sufficiently with strike tab, both knob/lever/handleset latch and deadbolt could require adjustment – we suggest you contact a local locksmith for assistance.

Use:

Use of the Works with Apple badge means that an accessory has been designed to work specifically with the technology identified in the badge and has been certified by the developer to meet Apple performance standards.

Apple is not responsible for the operation of this device or its compliance with safety and regulatory standards.

Apple®, Apple Home™, Apple Watch®, HomeKit®, and iPhone® are trademarks of Apple Inc., registered in the U.S. and other countries and regions.

Google, Google Play and Google Home are trademarks of Google LLC.

Amazon, Alexa and all related logos are trademarks of Amazon.com, Inc. or its affiliates.

Wi-Fi is a registered trademark of Wi-Fi Alliance®.

The Bluetooth® word mark and logos are registered trademarks owned by Bluetooth SIG, Inc. and any use of such marks by Yale is under license. Other trademarks and trade names are those of their respective owners.

RF Exposure Statement:
FCC and IC RF Radiation Exposure Statement: This equipment complies with FCC and IC RF Radiation exposure limits set forth for an uncontrolled environment. This device and its antenna must not be co-located or operating in conjunction with any other antenna or transmitter.
This equipment should be installed and operated with a minimum distance of 20 cm between the radiator and your body

RF du FCC et IC d'exposition aux dariations: Cet equipment est conforme a l'exposition de FCC et IC rayonnements RF limites e-tablies pour un environment non controle. L'antenne pour ce transmetteur ne doit pas etre meme endroit avec d'autres emetteur sauf conformement a FCC et IC procedures de produits Multi-emetteur
Cet equipment doit etre installe et utilize avec une distance minimale de 20 cm entre le radiateur et votre corps

FCC:

FCC ID: **MZR-YRD450-N**

FCC Part 15.19
This device complies with part 15 of the FCC rules Operation is subject to the following two condition: (1) This device may not cause harmful interference, and (2) this device must accept any interference received, including interference that may cause undesired operation
FCC Part 15.21
Any changes or modifications (including the antennas) to this device that are not expressly approved by the manufacturer may void the user's authority to operate the equipment

Class B Equipment

This equipment has been tested and found to comply with the limits for a Class B digital device, pursuant to Part 15 of the FCC Rules. These limits are designed to provide reasonable protection against harmful interference in a residential installation. This equipment generates, uses, and can radiate radio frequency energy and, if not installed and used in accordance with the instructions, may cause harmful interference to radio communications. However, there is no guarantee that interference will not occur in a particular installation. If this equipment does cause harmful interference to radio or television reception, which can be determined by turning the equipment off and on, the user is encouraged to try to correct the interference by one or more of the following measures:

- Reorient or relocate the receiving antenna.
- Increase the separation between the equipment and receiver.
- Connect the equipment into an outlet on a circuit different from that to which the receiver is connected.
- Consult the dealer or an experienced radio/TV technician for help.
- Distance between EUT and users is 20 cm.

Warning:

Changes or modifications to this device, not expressly approved by Yale Home could void the user's authority to operate the equipment.

Industry Canada:

IC ID: **2676A-YRD450-N**

This Class A digital apparatus meets all requirements of the CanadianInterference Causing Equipment Regulations.

This device contains licence-exempt transmitter(s)/receiver(s) that comply with Innovation, Science and Economic Development Canada's licence-exempt RSS(s). Operations is subject to the following two conditions:
(1)This device may not cause interference
(2)This device must accept any interference, including interference that may cause undesired operation of the device

L'emetteur/recepteur exempt de licence contenu dans le present appareil est conforme aux CNR d'Innovation, Sciences et Developpement economique Canada applicables aux apparells radio exempts de licence. L'exploitation est autorisee aux deux conditions suivantes :
(1)L'appareil ne doit pas produire de brouillage:
(1)L'appareil dout accepter tout brouillage radioelectrique subi, meme si le brouillage est susceptiable d'en compromettre le fonctionnement.

Yale Home

24/7 Support: 1-855-213-5841 • support.shopyalehome.com

Trusted Every Day

Yale® and Assure Lock® 2 are registered trademarks of Master Lock Company LLC and its affiliates. Other products' brand names may be trademarks or registered trademarks of their respective owners and are mentioned for reference purposes only. ©Copyright 2023. All rights reserved. Reproduction in whole or in part without the express written permission of Master Lock Company LLC or its affiliates is prohibited.

P/N YRD450-N-MNL-0039 Rev A