SAR TEST REPORT

Test Report No. : 14007301H-A-R1

Applicant	:	**Honda Motor Co., Ltd.**
Type of EUT	:	**4.0G LET**
Model Number of EUT	:	**E4000-01**
FCC ID	:	**N43E400001**
Test regulation	:	**FCC47CFR 2.1093**
Test Result	:	**Complied (Refer to SECTION 4)**
Reported SAR Value		**The highest reported SAR(1 g)** Body : 0.93 W/kg

1. This test report shall not be reproduced in full or partial, without the written approval of UL Japan, Inc.
2. The results in this report apply only to the sample tested.
3. This sample tested is in compliance with the limits of the above regulation.
4. The test results in this test report are traceable to the national or international standards.
5. This test report must not be used by the customer to claim product certification, approval, or endorsement by the A2LA accreditation body.
6. This test report covers Radio technical requirements. It does not cover administrative issues such as Manual or non-Radio test related Requirements. (if applicable)
7. The all test items in this test report are conducted by UL Japan, Inc. Ise EMC Lab.
8. The opinions and the interpretations to the result of the description in this report are outside scopes where UL Japan has been accredited.
9. The information provided from the customer for this report is identified in Section 1.
10. This report is a revised version of 14007301H-A. 14007301H-A is replaced with this report.

Date of test: January 5 to 18, 2022

Representative test engineer:
Hisayoshi Sato
Engineer

Approved by :
Satofumi Matsuyama
Engineer

CERTIFICATE 5107.02

☐ The testing in which "Non-accreditation" is displayed is outside the accreditation scopes in UL Japan, Inc.
☒ There is no testing item of "Non-accreditation".

UL Japan, Inc.
Ise EMC Lab.
4383-326 Asama-cho, Ise-shi, Mie-ken 516-0021 JAPAN
Telephone: +81 596 24 8999
Facsimile: +81 596 24 8124

REVISION HISTORY

Original Test Report No.: 14007301H-A

Revision	Test report No.	Date	Page Revised Contents
- (Original)	14007301H-A	February 3, 2022	-
1	14007301H-A-R1	February 25, 2022	Cover Page, Section 2 Correction of Type of EUT and Model Number of EUT Type of EUT: Embedded wireless module → 4.0G LET Model Number of EUT: SX-SDPAC → E4000-01
1	14007301H-A-R1	February 25, 2022	Correction of Rating of Section 2.2. DC 5 V → DC 3.3 V
1	14007301H-A-R1	February 25, 2022	Addition of below frequency band in the table for Section 2.2. 20Mband 5500 MHz to 5580 MHz → 5500 MHz to 5700 MHz 5660 MHz to 5700 MHz 40Mband 2422 MHz - 2452 MHz 5510 MHz, 5550 MHz → 5510 MHz to 5670 MHz 5670 MHz 80Mband 5530 MHz → 5530 MHz to 5610 MHz
1	14007301H-A-R1	February 25, 2022	Addition of explanatory note *1) in Section 2.2. *1) Tests were not performed following channels, because this antenna installed in Host device is not used these channels. - WLAN 11n40 (2.4GHz band) - 20 MHz Bandwidth (5600 MHz - 5640 MHz) - 40 MHz Bandwidth (5590 MHz - 5630 MHz) - 80 MHz Bandwidth (5610 MHz MHz)
1	14007301H-A-R1	February 25, 2022	Section 3.2 Correction of below sentence. This EUT operates only with the specified 4.0G LET. Therefore the test was performed with the 4.0G LET (Host) in which the distance to the exterior surface is shortest. → RF Module and Host have the same product name: 4.0G LET and model number: E4000-01. The EUT of this test report is RF Module. In order to distinguish between RF Module and Host, this test report shows as follows. RF Module: 4.0G LET Host: 4.0G LET (Host) 4.0G LET only works with 4.0G LET (Host). Therefore, the test was performed with the 4.0G LET (Host) in which the distance to the exterior surface is shortest.
1	14007301H-A-R1	February 25, 2022	P. 11, 20 Correction of below explanatory note. Following channels are not used. - 20 MHz Bandwidth (5600 MHz - 5640 MHz) - 40 MHz Bandwidth (5590 MHz - 5630 MHz) - 80 MHz Bandwidth (5610 MHz) → Following channels are not used on this host device. - WLAN 11n40 (2.4GHz band) - 20 MHz Bandwidth (5600 MHz - 5640 MHz) - 40 MHz Bandwidth (5590 MHz - 5630 MHz) - 80 MHz Bandwidth (5610 MHz MHz)
1	14007301H-A-R1	February 25, 2022	P 12 Deletion of 5590 MHz in the table. Deletion of below explanatory note. * Not used in Canada
1	14007301H-A-R1	February 25, 2022	P 19, 21, 22 Correction of explanatory note 1. 1.Output Power and SAR measurement is not required for 802.11a/ac VHT20/VHT40/VHT80 channels when the specified tune-up tolerances for 802.11a/ac VHT20/VHT40/VHT80 are lower than 802.11a and the measured SAR is ≤ 1.2 W/Kg. → 1.Excerpt from KDB 248227 D01 clause 5.3.4 b), when the highest reported SAR for the initial test configuration (when applicable, include subsequent highest output channels), according to the initial test position or fixed exposure position requirements, is adjusted by the ratio of the subsequent test configuration to initial test configuration specified maximum output power and the adjusted SAR is ≤ 1.2 W/kg, SAR is not required for that subsequent test configuration.
1	14007301H-A-R1	February 25, 2022	P 33, 35, 36 Addition to table of SAR test exclusions for Subsequent test configuration
1	14007301H-A-R1	February 25, 2022	P 23 to 25 Replacement of duty chart image
1	14007301H-A-R1	February 25, 2022	APPENDIX 4 Correction of Type of Equipment 4.0G LET → 4.0G LET(Host)

Reference: Abbreviations (Including words undescribed in this report)

AAN	Asymmetric Artificial Network
AC	Alternating Current
AM	Amplitude Modulation
AMN	Artificial Mains Network
Amp, AMP	Amplifier
ANSI	American National Standards Institute
Ant, ANT	Antenna
AP	Access Point
ASK	Amplitude Shift Keying
Atten., ATT	Attenuator
AV	Average
BPSK	Binary Phase-Shift Keying
BR	Bluetooth Basic Rate
BT	Bluetooth
BT LE	Bluetooth Low Energy
BW	BandWidth
C.F	Correction Factor
Cal Int	Calibration Interval
CAV	CISPR AV
CCK	Complementary Code Keying
CDN	Coupling Decoupling Network
Ch., CH	Channel
CISPR	Comite International Special des Perturbations Radioelectriques
Corr.	Correction
CPE	Customer premise equipment
CW	Continuous Wave
DBPSK	Differential BPSK
DC	Direct Current
DET	Detector
D-factor	Distance factor
Dmax	maximum absolute voltage change during an observation period
DQPSK	Differential QPSK
DSSS	Direct Sequence Spread Spectrum
DUT	Device Under Test
EDR	Enhanced Data Rate
e.i.r.p., EIRP	Equivalent Isotropically Radiated Power
EM clamp	Electromagnetic clamp
EMC	ElectroMagnetic Compatibility
EMI	ElectroMagnetic Interference
EMS	ElectroMagnetic Susceptibility
EN	European Norm
e.r.p., ERP	Effective Radiated Power
ETSI	European Telecommunications Standards Institute
EU	European Union
EUT	Equipment Under Test
Fac.	Factor
FCC	Federal Communications Commission
FHSS	Frequency Hopping Spread Spectrum
FM	Frequency Modulation
Freq.	Frequency
FSK	Frequency Shift Keying
Fund	Fundamental
FWD	Forward
GFSK	Gaussian Frequency-Shift Keying
GNSS	Global Navigation Satellite System
GPS	Global Positioning System
Hori.	Horizontal
ICES	Interference-Causing Equipment Standard
I/O	Input/Output
IEC	International Electrotechnical Commission
IEEE	Institute of Electrical and Electronics Engineers
IF	Intermediate Frequency
ILAC	International Laboratory Accreditation Conference
ISED	Innovation, Science and Economic Development Canada
ISN	Impedance Stabilization Network
ISO	International Organization for Standardization
JAB	Japan Accreditation Board
LAN	Local Area Network
LCL	Longitudinal Conversion Loss
LIMS	Laboratory Information Management System
LISN	Line Impedance Stabilization Network
MRA	Mutual Recognition Arrangement
N/A	Not Applicable
NIST	National Institute of Standards and Technology
NS	No signal detect.
NSA	Normalized Site Attenuation
OBW	Occupied BandWidth
OFDM	Orthogonal Frequency Division Multiplexing
PER	Packet Error Rate
PK	Peak
P_{LT}	long-term flicker severity
POHC(A)	Partial Odd Harmonic Current
Pol., Pola.	Polarization
PR-ASK	Phase Reversal ASK
P_{ST}	short-term flicker severity
QAM	Quadrature Amplitude Modulation
QP	Quasi-Peak
QPSK	Quadrature Phase Shift Keying
r.m.s., RMS	Root Mean Square
RBW	Resolution BandWidth
RE	Radio Equipment
REV	Reverse
RF	Radio Frequency
RFID	Radio Frequency Identifier
RNSS	Radio Navigation Satellite Service
RSS	Radio Standards Specifications
Rx	Receiving
SINAD	Ratio of (Signal + Noise + Distortion) to (Noise + Distortion)
S/N	Signal to Noise ratio
SA, S/A	Spectrum Analyzer
SG	Signal Generator
SVSWR	Site-Voltage Standing Wave Ratio
THC(A)	Total Harmonic Current
THD(%)	Total Harmonic Distortion
TR, T/R	Test Receiver
Tx	Transmitting
VBW	Video BandWidth
Vert.	Vertical
WLAN	Wireless LAN
xDSL	Generic term for all types of DSL technology (DSL: Digital Subscriber Line)

CONTENTS PAGE

SECTION1: Customer information **5**
SECTION2: Equipment under test (EUT) **5**
2.1 Identification of EUT 5
2.2 Product Description 6
SECTION3: Test standard information **7**
3.1 Test Specification 7
3.2 Procedure 7
3.3 Additions or deviations to standard 7
3.4 Exposure limit 8
3.5 SAR 9
3.6 Test Location 9
SECTION4: Test result **10**
4.1 Result 10
4.2 Stand-alone SAR result 10
4.3 Simultaneous transmission SAR result 10
SECTION5: Tune-up tolerance information and software information **11**
SECTION6: RF Exposure Conditions (Test Configurations) **13**
6.1 Summary of the distance between antenna and surface of EUT 13
6.2 SAR test exclusion considerations according to KDB 447498 D01 14
SECTION7: Description of the Body setup **16**
7.1 Procedure for SAR test position determination 16
7.2 Test position for Body setup 16
SECTION8: Description of the operating mode **17**
8.1 Output Power and SAR test required 17
8.2 Duty rate confirmation 23
SECTION9: Test surrounding **26**
9.1 Measurement uncertainty 26
SECTION10: Parameter Check **27**
10.1 For SAR system check 28
10.2 For SAR measurement 28
SECTION11: System Check confirmation **29**
SECTION12: Measured and Reported (Scaled) SAR Results **30**
12.1 WLAN 2.4 GHz Band 32
12.2 WLAN 5.3 GHz Band 33
12.3 WLAN 5.5GHz Band 35
12.4 WLAN 5.8GHz Band 36
12.5 Repeated measurement 37
SECTION13: Test instruments **38**
APPENDIX 1 : System Check **39**
APPENDIX 2 : SAR Measurement data **47**
APPENDIX 3 : System specifications **52**
APPENDIX 4 : Photographs of test setup **108**

SECTION1: Customer information

Company Name	:	Honda Motor Co., Ltd.
Address	:	No.6-1, Hagadai, Haga-Machi, Haga-Gun, Tochigi-ken 321-3395 Japan
Telephone Number	:	+81-28-687-0707
Contact Person	:	Kazumori Sakai

The information provided from the customer is as follows;
- Applicant, Type of EUT, Model Number of EUT, FCC ID on the cover and other relevant pages
- Operating/Test Mode(s) (Mode(s)) on all the relevant pages
- SECTION 1: Customer information
- SECTION 2: Equipment under test (EUT) other than the Receipt Date
- SECTION 5: Tune-up tolerance information and software information

* The laboratory is exempted from liability of any test results affected from the above information in SECTION 2 and 5.

SECTION2: Equipment under test (EUT)

2.1 Identification of EUT

<Information of the EUT>

Type	:	4.0G LET
Model Number	:	E4000-01
Serial Number	:	001
Receipt Date	:	September 16, 2021
Condition	:	Engineering prototype (Not for Sale: This sample is equivalent to mass-produced items.)
Modification	:	No Modification by the test lab

2.2 Product Description

Model: E4000-01 (referred to as the EUT in this report) is a 4.0G LET.

General Specification

Rating : DC 3.3 V

Radio Specification

Specification of Wireless LAN (IEEE802.11b/g/a/n-20/n-40/11ac-20/11ac-40/11ac-80)

	IEEE802.11b	IEEE802.11g/n (20 M band)	IEEE802.11a/n/ac (20 M band)	IEEE802.11n/ac (40 M band)	IEEE802.11ac (80 M band)
Frequency of operation	2412 MHz - 2462 MHz	2412 MHz - 2462 MHz	5180 MHz - 5240 MHz 5260 MHz - 5320 MHz 5500 MHz - 5700 MHz 5745 MHz - 5825 MHz	2422 MHz - 2452 MHz 5190 MHz - 5230 MHz 5270 MHz - 5310 MHz 5510 MHz - 5670 MHz	5210 MHz 5290 MHz 5530 MHz - 5610 MHz 5775 MHz
Type of modulation	DSSS (CCK, DQPSK, DBPSK)	OFDM-CCK (64QAM, 16QAM, QPSK, BPSK)	11a/n: OFDM (64QAM, 16QAM, QPSK, BPSK) 11ac: OFDM (64QAM, 16QAM, QPSK, BPSK, 256QAM)		
Channel spacing	5 MHz		20 MHz	40 MHz	80 MHz
Antenna type	PCB antenna *1)				
Antenna Gain	2.4 GHz: 3.5 dBi 5 GHz: 3.5 dBi				

Bluetooth

	Bluetooth
Frequency of operation	2402 MHz - 2480 MHz
Type of modulation	BT: FHSS (GFSK, π/4DQPSK, 8DPSK) LE: GFSK
Channel spacing	BT: 1 MHz LE: 2 MHz
Antenna type	PCB antenna
Antenna Gain	3.5 dBi

*1) Tests were not performed following channels, because this antenna installed in Host device is not used these channels.
- WLAN 11n40 (2.4GHz band)
- 20 MHz Bandwidth (5600 MHz - 5640 MHz)
- 40 MHz Bandwidth (5590 MHz - 5630 MHz)
- 80 MHz Bandwidth (5610 MHz MHz)

SECTION3: Test standard information

3.1 Test Specification

Title : **FCC47CFR 2.1093**
Radiofrequency radiation exposure evaluation: portable devices.

: **Published RF exposure KDB procedures**

☑	**KDB 447498 D01(v06)**	RF Exposure Procedures and Equipment Authorization Policies for Mobile and Portable Devices
☐	**KDB 447498 D02(v02r01)**	SAR Measurement Procedures for USB Dongle Transmitters
☐	**KDB 648474 D04(v01r03)**	SAR Evaluation Considerations for Wireless Handsets
☐	**KDB 941225 D01(v03r01)**	3G SAR Measurement Procedures
☐	**KDB 941225 D05(v02r05)**	SAR Evaluation Considerations for LTE Devices
☐	**KDB 941225 D06(v02r01)**	SAR Evaluation Procedures for Portable Devices with Wireless Router Capabilities (Hot Spot SAR)
☐	**KDB 941225 D07(v01r02)**	SAR Evaluation Procedures for UMPC Mini-Tablet Devices
☐	**KDB 616217 D04(v01r02)**	SAR Evaluation Considerations for Laptop, Notebook, Netbook and Tablet Computers
☑	**KDB 865664 D01(v01r04)**	SAR Measurement Requirements for 100 MHz to 6 GHz
☑	**KDB 248227 D01(v02r02)**	SAR Guidance for 802.11(Wi-Fi) Transmitters

Reference
[1] SPEAG uncertainty document
[2] IEEE Std 1528-2013
[3] IEC 62209-2:2010 + AMD1:2019 CS

3.2 Procedure

Transmitter	**WLAN**
Test Procedure	Published RF exposure KDB procedures
Category	SAR
Note: UL Japan, Inc. ’s SAR Work Procedures 13-EM-W0429 and 13-EM-W0430	

RF Module and Host have the same product name: 4.0G LET and model number: E4000-01.
The EUT of this test report is RF Module.
In order to distinguish between RF Module and Host, this test report shows as follows.
RF Module: 4.0G LET
Host: 4.0G LET (Host)
4.0G LET only works with 4.0G LET (Host).
Therefore, the test was performed with the 4.0G LET (Host) in which the distance to the exterior surface is shortest.

3.3 Additions or deviations to standard

Other than above, no addition, exclusion nor deviation has been made from the standard.

3.4 Exposure limit

(A) Limits for Occupational/Controlled Exposure (W/kg)

Spatial Average (averaged over the whole body)	Spatial Peak (averaged over any 1 g of tissue)	Spatial Peak (hands/wrists/feet/ankles averaged over 10 g)
0.4	8.0	20.0

(B) Limits for General population/Uncontrolled Exposure (W/kg)

Spatial Average (averaged over the whole body	Spatial Peak (averaged over any 1 g of tissue)	Spatial Peak (hands/wrists/feet/ankles averaged over 10 g)
0.08	1.6	4.0

Occupational/Controlled Environments: are defined as locations where there is exposure that may be incurred by people who are aware of the potential for exposure, (i.e. as a result of employment or occupation).

General Population/Uncontrolled Environments: are defined as locations where there is the exposure of individuals who have no knowledge or control of their exposure.

NOTE:GENERAL POPULATION/UNCONTROLLED EXPOSURE
SPATIAL PEAK(averaged over any 1 g of tissue) LIMIT
1.6 W/kg

3.5 SAR

Specific Absorption Rate (SAR): The time derivative (rate) of the incremental energy (dW) absorbed by (dissipated in) an incremental mass (dm) contained in a volume element (dV) of a given density (ρ), as shown in the following equation:

$$\mathrm{SAR} = \frac{\mathrm{d}}{\mathrm{dt}}\left(\frac{\mathrm{dW}}{\mathrm{dm}}\right) = \frac{\mathrm{d}}{\mathrm{dt}}\left(\frac{\mathrm{dW}}{\rho \mathrm{dV}}\right)$$

SAR is expressed in units of watts per kilogram (W/kg) or equivalently milliwatts per gram (mW/g).

SAR is related to the E-field at a point by the following equation:

$$\mathrm{SAR} = \frac{\sigma|\mathrm{E}|^2}{\rho}$$

where
σ = conductivity of the tissue (S/m)
ρ = mass density of the tissue (kg/m3)
E = rms E-field strength (V/m)

3.6 Test Location

UL Japan, Inc. Ise EMC Lab.
Shielded room for SAR testing
*A2LA Certificate Number: 5107.02 / FCC Test Firm Registration Number: 884919
ISED Lab Company Number: 2973C / CAB identifier: JP0002
4383-326 Asama-cho, Ise-shi, Mie-ken 516-0021 JAPAN
Telephone : +81 596 24 8999 Facsimile : +81 596 24 8124

SECTION4: Test result

4.1 Result

Complied
Highest values at each band are listed next section.

4.2 Stand-alone SAR result

RF Exposure Conditions		Equipment Class - Highest Reported SAR (W/kg)	
		DTS	NII
Standalone Tx (1-g SAR)	Body	0.456	0.927

*Details are shown at section 12.

4.3 Simultaneous transmission SAR result

Wireless LAN and Bluetooth(incl. BT LE) do not transmit simultaneously.

SECTION5: Tune-up tolerance information and software information

Maximum tune-up tolerance limit

Mode	Data rate	Band	Frequency [MHz]	Maximum tune-up tolerance limit [dBm]	Maximum tune-up tolerance limit [mW]
WLAN 11b	1 Mbps	2.4 GHz	2412-2462	16.50	44.67
WLAN 11g/11n20	6 Mbps /MCS0	2.4 GHz	2412-2457	15.50	35.48
WLAN 11g/11n20	6 Mbps /MCS0	2.4 GHz	2462	16.50	44.67
WLAN 11a/11n20/11ac20	6 Mbps /MCS0	5.2 GHz	5180-5200	14.50	28.18
WLAN 11a/11n20/11ac20	6 Mbps /MCS0	5.2 GHz	5220-5240	13.50	22.39
WLAN 11n40/11ac40	MCS0	5.2 GHz	5190-5230	13.50	22.39
WLAN 11ac80	MCS0	5.2 GHz	5210	12.50	17.78
WLAN 11a/11n20/11ac20	6 Mbps /MCS0	5.3 GHz	5260-5280	13.50	22.39
WLAN 11a/11n20/11ac20	6 Mbps /MCS0	5.3 GHz	5300-5320	14.50	28.18
WLAN 11n40/11ac40	MCS0	5.3 GHz	5270	13.50	22.39
WLAN 11n40/11ac40	MCS0	5.3 GHz	5310	12.50	17.78
WLAN 11ac80	MCS0	5.3 GHz	5290	11.50	14.13
WLAN 11a/11n20/11ac20	6 Mbps /MCS0	5.5 GHz	5500	14.50	28.18
WLAN 11a/11n20/11ac20	6 Mbps /MCS0	5.5 GHz	5520-5700	13.50	22.39
WLAN 11n40/11ac40	MCS0	5.5 GHz	5510	14.50	28.18
WLAN 11n40/11ac40	MCS0	5.5 GHz	5550-5630	13.50	22.39
WLAN 11n40/11ac40	MCS0	5.5 GHz	5670	14.50	28.18
WLAN 11ac80	MCS0	5.5 GHz	5530-5610	13.50	22.39
WLAN 11a	6Mbps	5.8 GHz	5745-5825	14.50	28.18
WLAN 11n20/11ac20	MCS0	5.8 GHz	5745-5765	13.50	22.39
WLAN 11n20/11ac20	MCS0	5.8 GHz	5785-5825	14.50	28.18
WLAN 11n40/11ac40	MCS0	5.8 GHz	5755	14.50	28.18
WLAN 11n40/11ac40	MCS0	5.8 GHz	5795	15.50	35.48
WLAN 11ac80	MCS0	5.8 GHz	5775	14.50	28.18
Bluetooth	DH5	2.4 GHz	2402-2480	5.99	3.97
Bluetooth	2DH5	2.4 GHz	2402-2480	5.70	3.72
Bluetooth	3DH5	2.4 GHz	2402-2480	5.70	3.72
BT LE	-	2.4 GHz	2402-2480	6.18	4.15

Following channels are not used on this host device.
- WLAN 11n40 (2.4GHz band)
- 20 MHz Bandwidth (5600 MHz - 5640 MHz)
- 40 MHz Bandwidth (5590 MHz - 5630 MHz)
- 80 MHz Bandwidth (5610 MHz MHz)

Maximum tune-up tolerance limit of WLAN is defined as maximum timed-average value. (Considering to maximum duty cycle of WLAN.)
For Maximum tune-up tolerance limit of Bluetooth/BT LE is defined by a customer as duty 100 %

Software setting
*The power value of the EUT was set for testing as follows (setting value might be different from product specification value); Power settings: See Power Setting Table (The power setting value has been adjusted to max power for testing.) Software: QRCT Version 4.0.00138.0 *This setting of software is the worst case. The test was performed with condition that obtained the maximum average power (Burst) in pre-check. Any conditions under the normal use do not exceed the condition of setting. In addition, end users cannot change the settings of the output power of the product.

[Power Setting Table used for SAR tests]

Band (GHz)	Mode	Data Rate	Ch #	Freq. (MHz)	Power Setting
2.4	11b	1 Mbps	1	2412	16.0
			6	2437	16.0
			11	2462	16.0
5.3	11a	6 Mbps	52	5260	13.0
			60	5300	14.0
			64	5320	14.0
5.5	11n40	MCS0	102	5510	14.0
			110	5550	13.5
			134	5670	14.0
5.8	11n40	MCS0	151	5755	14.0
			159	5795	15.0

SECTION6: RF Exposure Conditions (Test Configurations)

6.1 Summary of the distance between antenna and surface of EUT

Test Position	WLAN antenna
	Distance
Front	18.47 mm
Rear	28.83 mm
Left	57.15 mm
Right	42.5 mm
Top	9.6 mm
Bottom	171.4 mm

*Details are shown in Appendix 4

6.2 SAR test exclusion considerations according to KDB 447498 D01

The following is based on KDB 447498 D01.
1) The 1-g and 10-g SAR test exclusion thresholds for 100 MHz to 6 GHz at test separation distances ≤ 50 mm are determined by:
[(max. power of channel, including tune-up tolerance, mW)/(min. test separation distance, mm)] ·[√f(GHz)] ≤ 3.0 for 1-g SAR and ≤ 7.5 for 10-g extremity SAR

1. The upper frequency of the frequency band was used in order to calculate standalone SAR test exclusion considerations.
2. Power and distance are rounded to the nearest mW and mm before calculation
3. The result is rounded to one decimal place for comparison
4. The test exclusions are applicable only when the minimum test separation distance is ≤ 50 mm and for transmission frequencies between 100 MHz and 6 GHz. When the minimum test separation distance is < 5 mm, a distance of 5 mm is applied to determine SAR test exclusion. When the separation of antenna to EUT's surfaces and edges are ≤ 50 mm, the separation distance used for the SAR exclusion calculations is 5 mm.
5. "N/A" displayed on below exclusion calculation means not applicable this formula since distance between antenna and surface is > 50 mm.

When the calculated threshold value by a numerical formula above-mentioned in the following table is 3.0 or less, SAR test is excluded.

SAR exclusion calculations for antenna < 50 mm from the user

Antenna	Tx Interface	Frequency (MHz)	Output Power		Calculated Threshold Value					
			dBm	mW	Front	Rear	Left	Right	Top	Bottom
Main	11b	2462	16.50	45	14 -MEASURE-	14 -MEASURE-	N/A	14 -MEASURE-	14 -MEASURE-	N/A
Main	11g, 11n20	2462	16.50	45	14 -MEASURE-	14 -MEASURE-	N/A	14 -MEASURE-	14 -MEASURE-	N/A
Main	Bluetooth	2480	5.99	4	1.3 -EXEMPT-	1.3 -EXEMPT-	N/A	1.3 -EXEMPT-	1.3 -EXEMPT-	N/A
Main	BT LE	2480	6.18	4	1.3 -EXEMPT-	1.3 -EXEMPT-	N/A	1.3 -EXEMPT-	1.3 -EXEMPT-	N/A

SAR exclusion calculations for antenna <50 mm from the user

Antenna	Tx Interface	Frequency (MHz)	Output Power		Calculated Threshold Value					
			dBm	mW	Front	Rear	Left	Right	Top	Bottom
Main	11a, 11n20, 11n40, 11ac20,	5240	14.50	28	12.9 -MEASURE-	12.9 -MEASURE-	N/A	12.9 -MEASURE-	12.9 -MEASURE-	N/A
Main	11a, 11n20, 11n40, 11ac20,	5320	14.50	28	13 -MEASURE-	13 -MEASURE-	N/A	13 -MEASURE-	13 -MEASURE-	N/A
Main	11a, 11n20, 11n40, 11ac20,	5700	14.50	28	13.5 -MEASURE-	13.5 -MEASURE-	N/A	13.5 -MEASURE-	13.5 -MEASURE-	N/A
Main	11a, 11n20, 11n40, 11ac20,	5825	15.50	35	17.1 -MEASURE-	17.1 -MEASURE-	N/A	17.1 -MEASURE-	17.1 -MEASURE-	N/A

2) At 100 MHz to 6 GHz and for test separation distances > 50 mm, the SAR test exclusion threshold is determined according to the following.

a) [(3·50)/(√f(GHz))) + (test separation distance - 50 mm)·(f(MHz)/150)] mW at > 100 MHz and ≤ 1500 MHz

b) [(3·50)/(√f(GHz))) + (test separation distance - 50 mm)·10] mW at > 1500 MHz and ≤ 6 GHz

1. The upper frequency of the frequency band was used in order to calculate standalone SAR test exclusion considerations.
2. Power and distance are rounded to the nearest mW and mm before calculation
3. "N/A" displayed on below exclusion calculation means not applicable this formula since distance between antenna and surface is < 50 mm.

When output power is less than the calculated threshold value by a numerical formula above-mentioned in the following table, SAR test is excluded.

SAR exclusion calculations for antenna >50mm from the user

Antenna	Tx Interface	Frequency (MHz)	Output Power		Calculated Threshold Value					
			dBm	mW	Front	Rear	Left	Right	Top	Bottom
Main	11b	2462	16.50	45	N/A	N/A	167.1 mW -EXEMPT-	N/A	N/A	1309.6 mW -EXEMPT-
Main	11g, 11n20	2462	16.50	45	N/A	N/A	167.1 mW -EXEMPT-	N/A	N/A	1309.6 mW -EXEMPT-
Main	Bluetooth	2480	5.99	4	N/A	N/A	166.8 mW -EXEMPT-	N/A	N/A	1309.3 mW -EXEMPT-
Main	BT LE	2480	6.18	4	N/A	N/A	166.8 mW -EXEMPT-	N/A	N/A	1309.3 mW -EXEMPT-

SAR exclusion calculations for antenna >50mm from the user

Antenna	Tx Interface	Frequency (MHz)	Output Power		Calculated Threshold Value					
			dBm	mW	Front	Rear	Left	Right	Top	Bottom
Main	11a, 11n20, 11n40, 11ac20,	5240	14.50	28	N/A	N/A	137 mW -EXEMPT-	N/A	N/A	1279.5 mW -EXEMPT-
Main	11a, 11n20, 11n40, 11ac20,	5320	14.50	28	N/A	N/A	136.5 mW -EXEMPT-	N/A	N/A	1279 mW -EXEMPT-
Main	11a, 11n20, 11n40, 11ac20,	5700	14.50	28	N/A	N/A	134.3 mW -EXEMPT-	N/A	N/A	1276.8 mW -EXEMPT-
Main	11a, 11n20, 11n40, 11ac20,	5825	15.50	35	N/A	N/A	133.7 mW -EXEMPT-	N/A	N/A	1276.2 mW -EXEMPT-

SECTION7: Description of the Body setup

7.1 Procedure for SAR test position determination

-The tested procedure was performed according to the KDB 447498 D01 (Mobile and Portable Device RF Exposure Procedures and Equipment Authorization Policies).

7.2 Test position for Body setup

No.	Position	Test distance	WLAN	Bluetooth/ BT LE
			Tested	Tested
1	Front	0 mm	☑	☐
2	Rear	0 mm	☑	☐
3	Left	0 mm	☐	☐
4	Right	0 mm	☑	☐
5	Top	0 mm	☑	☐
6	Bottom	0 mm	☐	☐

*The test was conservatively performed with test distance 0 mm.

SECTION8: Description of the operating mode

8.1 Output Power and SAR test required

According to KDB 248227 D01, the initial test configuration for 2.4 GHz and 5 GHz OFDM transmission modes is determined by the 802.11 configuration with the highest maximum output power specified for production units, including tune-up tolerance, in each standalone and aggregated frequency band. SAR for the initial test configuration is measured using the highest maximum output power channel determined by the default power measurement procedures. When multiple configurations in a frequency band have the same specified maximum output power, the initial test configuration is determined according to the following steps applied sequentially.

1. The largest channel bandwidth configuration is selected among the multiple configurations with the same specified maximum output power.
2. If multiple configurations have the same specified maximum output power and largest channel bandwidth, the lowest order modulation among the largest channel bandwidth configurations is selected.
3. If multiple configurations have the same specified maximum output power, largest channel bandwidth and lowest order modulation, the lowest data rate configuration among these configurations is selected.
4. When multiple transmission modes (802.11a/g/n/ac) have the same specified maximum output power, largest channel bandwidth, lowest order modulation and lowest data rate, the lowest order 802.11 mode is selected; i.e., 802.11a is chosen over 802.11n then 802.11ac or 802.11g is chosen over 802.11n.

Wi-Fi 2.4GHz (DTS Band)
SISO

Band (GHz)	Mode	Data Rate	Ch #	Freq. (MHz)	Tune-up upper Power (dBm)	Measured average Power (dBm)	Initial test configuration	Note(s)
2.4	802.11b	1 Mbps	1	2412	16.50	15.87		2
			6	2437	16.50	15.78		
			11	2462	16.50	16.17	Yes	
	802.11g	6 Mbps	1	2412	15.50	Not Required		1
			6	2437	15.50	Not Required		
			11	2462	16.50	Not Required		
	802.11n (HT20)	MCS0	1	2412	15.50	Not Required		
			6	2437	15.50	Not Required		
			11	2462	16.50	Not Required		

Note(s):

1. According to KDB 248227 D01, SAR is not required for 802.11g/n HT20 channels when the highest reported SAR for DSSS is adjusted by the ratio of OFDM to DSSS specified maximum output power and the adjusted SAR is ≤ 1.2 W/kg.
2. According to KDB 248227 D01, SAR test channel was chosen. (shaded blue frame)

Wi-Fi 5GHz (U-NII-1 and U-NII-2A Bands)
SISO

Band (GHz)	Mode	Data Rate	Ch #	Freq. (MHz)	Tune-up upper Power (dBm)	Measured average Power (dBm)	Initial test configuration	Note(s)
5.2 (U-NII-1)	802.11a	6 Mbps	36	5180	14.5	Not Required		3
			40	5200	14.5	Not Required		
			44	5220	13.5	Not Required		
			48	5240	13.5	Not Required		
	802.11n (HT20)	MCS0	36	5180	14.5	Not Required		
			40	5200	14.5	Not Required		
			44	5220	13.5	Not Required		
			48	5240	13.5	Not Required		
	802.11n (HT40)	MCS0	38	5190	13.5	Not Required		
			46	5230	13.5	Not Required		
	802.11ac (VHT20)	MCS0	36	5180	14.5	Not Required		
			40	5200	14.5	Not Required		
			44	5220	13.5	Not Required		
			48	5240	13.5	Not Required		
	802.11ac (VHT40)	MCS0	38	5190	13.5	Not Required		
			46	5230	13.5	Not Required		
	802.11ac (VHT80)	MCS0	42	5210	12.5	Not Required		
5.3 (U-NII-2A)	802.11a	6 Mbps	52	5260	13.5	12.00		2, 4
			56	5280	13.5	Not Required		
			60	5300	14.5	12.86		
			64	5320	14.5	12.92	Yes	
	802.11n (HT20)	MCS0	52	5260	13.5	Not Required		1
			56	5280	13.5	Not Required		
			60	5300	14.5	Not Required		
			64	5320	14.5	Not Required		
	802.11n (HT40)	MCS0	54	5270	13.5	Not Required		
			62	5310	12.5	Not Required		
	802.11ac (VHT20)	MCS0	52	5260	13.5	Not Required		
			56	5280	13.5	Not Required		
			60	5300	14.5	Not Required		
			64	5320	14.5	Not Required		
	802.11ac (VHT40)	MCS0	54	5270	13.5	Not Required		
			62	5310	12.5	Not Required		
	802.11ac (VHT80)	MCS0	58	5290	11.5	Not Required		

Note(s):

1. Excerpt from KDB 248227 D01 clause 5.3.4 b), when the highest reported SAR for the initial test configuration (when applicable, include subsequent highest output channels), according to the initial test position or fixed exposure position requirements, is adjusted by the ratio of the subsequent test configuration to initial test configuration specified maximum output power and the adjusted SAR is ≤ 1.2 W/kg, SAR is not required for that subsequent test configuration.
2. When the same transmission mode configurations have the same maximum output power on the same channel for the 802.11 a/g/n/ac modes, the channel with the largest bandwidth and lowest data rate is selected (i.e. 802.11a).
3. When the specified maximum output power is the same for both UNII band I and UNII band 2A, begin SAR measurement in UNII band 2A; and if the highest *reported* SAR for UNII band 2A is
   - ≤ 1.2 W/kg, SAR is not required for UNII band I
   - > 1.2 W/kg, both bands should be tested independently for SAR.
4. According to KDB 248227 D01, SAR test channel was chosen. (shaded blue frame)

Wi-Fi 5GHz (U-NII-2C Band)
SISO

Band (GHz)	Mode	Data Rate	Ch #	Freq. (MHz)	Tune-up upper Power (dBm)	Measured average Power (dBm)	Initial test configuration	Note(s)
5.5 (U-NII-2C)	802.11a	6 Mbps	100	5500	14.5	Not Required		1
			104	5520	13.5	Not Required		
			108	5540	13.5	Not Required		
			112	5560	13.5	Not Required		
			116	5580	13.5	Not Required		
			120	5600	13.5	Not Required		
			124	5620	13.5	Not Required		
			128	5640	13.5	Not Required		
			132	5660	13.5	Not Required		
			136	5680	13.5	Not Required		
			140	5700	13.5	Not Required		
	802.11n (HT20)	MCS0	100	5500	14.5	Not Required		
			104	5520	13.5	Not Required		
			108	5540	13.5	Not Required		
			112	5560	13.5	Not Required		
			116	5580	13.5	Not Required		
			120	5600	13.5	Not Required		
			124	5620	13.5	Not Required		
			128	5640	13.5	Not Required		
			132	5660	13.5	Not Required		
			136	5680	13.5	Not Required		
			140	5700	13.5	Not Required		
	802.11n (HT40)	MCS0	102	5510	14.5	13.85	Yes	2, 3
			110	5550	13.5	12.61		
			118	5590	13.5	Not Required		
			126	5630	13.5	Not Required		
			134	5670	14.5	13.01		
	802.11ac (VHT20)	MCS0	100	5500	14.5	Not Required		1
			104	5520	13.5	Not Required		
			108	5540	13.5	Not Required		
			112	5560	13.5	Not Required		
			116	5580	13.5	Not Required		
			120	5600	13.5	Not Required		
			124	5620	13.5	Not Required		
			128	5640	13.5	Not Required		
			132	5660	13.5	Not Required		
			136	5680	13.5	Not Required		
			140	5700	13.5	Not Required		
	802.11ac (VHT40)	MCS0	102	5510	14.5	Not Required		
			110	5550	13.5	Not Required		
			118	5590	13.5	Not Required		
			126	5630	13.5	Not Required		
			134	5670	14.5	Not Required		
	802.11ac (VHT80)	MCS0	106	5530	13.5	Not Required		
			122	5610	13.5	Not Required		

Following channels are not used on this host device.
- WLAN 11n40 (2.4GHz band)
- 20 MHz Bandwidth (5600 MHz - 5640 MHz)
- 40 MHz Bandwidth (5590 MHz - 5630 MHz)
- 80 MHz Bandwidth (5610 MHz MHz)

Note(s):

1. Excerpt from KDB 248227 D01 clause 5.3.4 b), when the highest reported SAR for the initial test configuration (when applicable, include subsequent highest output channels), according to the initial test position or fixed exposure position requirements, is adjusted by the ratio of the subsequent test configuration to initial test configuration specified maximum output power and the adjusted SAR is ≤ 1.2 W/kg, SAR is not required for that subsequent test configuration.
2. When the same transmission mode configurations have the same maximum output power on the same channel for the 802.11 a/g/n/ac modes, the channel with the largest bandwidth and lowest data rate is selected (i.e. 802.11n HT40).
3. According to KDB 248227 D01, SAR test channel was chosen. (shaded blue frame)

Wi-Fi 5GHz (U-NII-3 Band)
SISO

Band (GHz)	Mode	Data Rate	Ch #	Freq. (MHz)	Tune-up upper	Measured average	Initial test configuration	Note(s)
5.8 (U-NII-3)	802.11a	6 Mbps	149	5745	14.5	Not Required		1
			153	5765	14.5	Not Required		
			157	5785	14.5	Not Required		
			161	5805	14.5	Not Required		
			165	5825	14.5	Not Required		
	802.11n (HT20)	MCS0	149	5745	13.5	Not Required		
			153	5765	13.5	Not Required		
			157	5785	14.5	Not Required		
			161	5805	14.5	Not Required		
			165	5825	14.5	Not Required		
	802.11n (HT40)	MCS0	151	5755	14.5	12.94		2, 3
			159	5795	15.5	13.84	Yes	
	802.11ac (VHT20)	MCS0	149	5745	13.5	Not Required		1
			153	5765	13.5	Not Required		
			157	5785	14.5	Not Required		
			161	5805	14.5	Not Required		
			165	5825	14.5	Not Required		
	802.11ac (VHT40)	MCS0	151	5755	14.5	Not Required		
			159	5795	15.5	Not Required		
	802.11ac (VHT80)	MCS0	155	5775	14.5	Not Required		

Note(s):

1. Excerpt from KDB 248227 D01 clause 5.3.4 b), when the highest reported SAR for the initial test configuration (when applicable, include subsequent highest output channels), according to the initial test position or fixed exposure position requirements, is adjusted by the ratio of the subsequent test configuration to initial test configuration specified maximum output power and the adjusted SAR is ≤ 1.2 W/kg, SAR is not required for that subsequent test configuration.
2. When the same transmission mode configurations have the same maximum output power on the same channel for the 802.11 a/g/n/ac modes, the channel with the largest bandwidth and lowest data rate is selected (i.e. 802.11n HT40).
3. According to KDB 248227 D01, SAR test channel was chosen. (shaded blue frame)

8.2 Duty rate confirmation

11b 1Mbps

Tx on / (Tx on + Tx off) = 0.994
Tx on / (Tx on + Tx off) * 100 = 99.4 %
Duty factor = 10 * log (12.31 / 12.23) = 0.03 dB

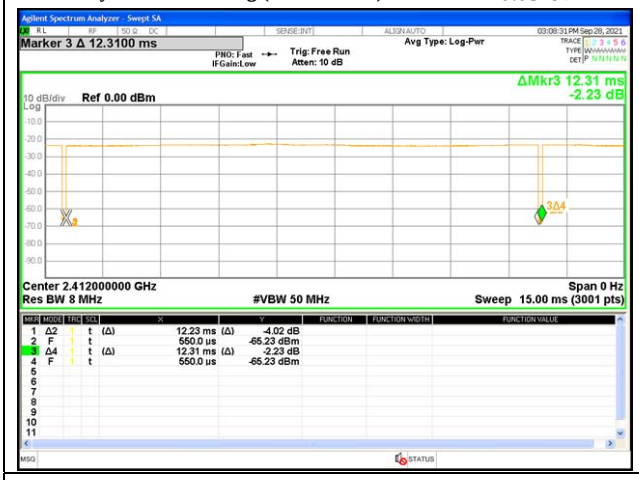

11g 6Mbps

Tx on / (Tx on + Tx off) = 0.927
Tx on / (Tx on + Tx off) * 100 = 92.7 %
Duty factor = 10 * log (2.192 / 2.033) = 0.33 dB

11n20(2.4G) MCS0

Tx on / (Tx on + Tx off) = 0.949
Tx on / (Tx on + Tx off) * 100 = 94.9 %
Duty factor = 10 * log (1.993 / 1.892) = 0.23 dB

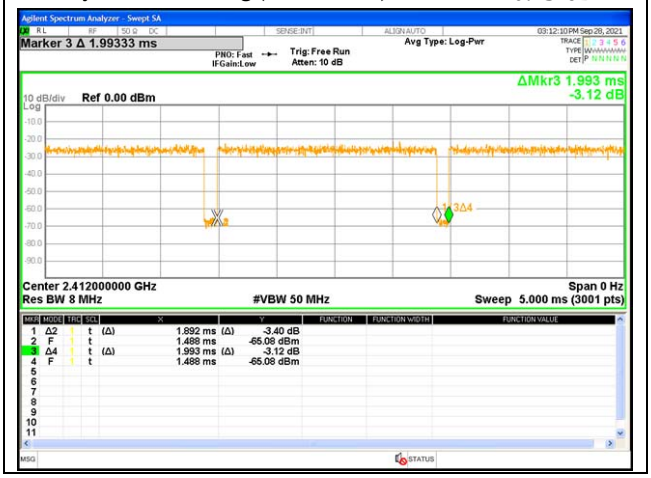

11a 6Mbps

Tx on / (Tx on + Tx off) = 0.956
Tx on / (Tx on + Tx off) * 100 = 95.6 %
Duty factor = 10 * log (2.125 / 2.031) = 0.20 dB

11n20(5G) MCS0

Tx on / (Tx on + Tx off) = 0.949
Tx on / (Tx on + Tx off) * 100 = 94.9 %
Duty factor = 10 * log (1.997 / 1.895) = 0.23 dB

11n40(5G) MCS0

Tx on / (Tx on + Tx off) = 0.908
Tx on / (Tx on + Tx off) * 100 = 90.8 %
Duty factor = 10 * log (1.027 / 0.933) = 0.42 dB

11ac20 MCS0

Tx on / (Tx on + Tx off) = 0.951
Tx on / (Tx on + Tx off) * 100 = 95.1 %
Duty factor = 10 * log (2.011 / 1.913) = 0.22 dB

11ac40 MCS0		11ac80	
Tx on / (Tx on + Tx off) =	0.907	Tx on / (Tx on + Tx off) =	0.778
Tx on / (Tx on + Tx off) * 100 =	90.7 %	Tx on / (Tx on + Tx off) * 100 =	77.8 %
Duty factor = 10 * log (1.041 / 0.944) =	0.42 dB	Duty factor = 10 * log (0.589 / 0.4585) =	1.09 dB

SECTION9: Test surrounding

9.1 Measurement uncertainty

This measurement uncertainty budget is suggested by IEEE Std 1528(2013) and IEC62209-2:2010+AMD1:2019 CSV, and determined by Schmid & Partner Engineering AG (DASY5/6 Uncertainty Budget). Per KDB 865664 D01 SAR Measurement 100 MHz to 6 GHz Section 2.8.1., when the highest measured SAR(1 g) within a frequency band is < 1.5 W/kg, the extensive SAR measurement uncertainty analysis described in IEEE Std.1528 (2013) is not required in SAR reports submitted for equipment approval.

<Body>

Error Description	Uncert. value	Prob. Dist.	Div.	(ci) 1 g	(ci) 10 g	Std. Unc. (1 g)	Std.Unc. (10 g)
Measurement System							
Probe Calibration	± 6.55 %	N	1	1	1	± 6.55 %	± 6.55 %
Axial Isotropy	± 4.7 %	R	√3	0.7	0.7	± 1.9 %	± 1.9 %
Hemispherical Isotropy	± 9.6 %	R	√3	0.7	0.7	± 3.9 %	± 3.9 %
Linearity	± 4.7 %	R	√3	1	1	± 2.7 %	± 2.7 %
Modulation Response	± 2.4 %	R	√3	1	1	± 1.4 %	± 1.4 %
System Detection Limits	± 1.0 %	R	√3	1	1	± 0.6 %	± 0.6 %
Boundary Effects	± 2.0 %	R	√3	1	1	± 1.2 %	± 1.2 %
Readout Electronics	± 0.3 %	N	1	1	1	± 0.3 %	± 0.3 %
Response Time	± 0.8 %	R	√3	1	1	± 0.5 %	± 0.5 %
Integration Time	± 2.6 %	R	√3	1	1	± 1.5 %	± 1.5 %
RF Ambient Noise	± 3.0 %	R	√3	1	1	± 1.7 %	± 1.7 %
RF Ambient Reflections	± 3.0 %	R	√3	1	1	± 1.7 %	± 1.7 %
Probe Positioner	± 0.04 %	R	√3	1	1	± 0.0 %	± 0.0 %
Probe Positioning	± 0.8 %	R	√3	1	1	± 0.5 %	± 0.5 %
Post-processing	± 4.0 %	R	√3	1	1	± 2.3 %	± 2.3 %
Test Sample Related							
Device Holder	± 3.6 %	N	1	1	1	± 3.6 %	± 3.6 %
Test sample Positioning	± 2.9 %	N	1	1	1	± 2.9 %	± 2.9 %
Power Scaling	± 0.0 %	R	√3	1	1	± 0.0 %	± 0.0 %
Power Drift	± 5.0 %	R	√3	1	1	± 2.9 %	± 2.9 %
Phantom and Setup							
Phantom Uncertainty	± 7.6 %	R	√3	1	1	± 4.4 %	± 4.4 %
SAR correction	± 1.9 %	N	1	1	0.84	± 1.9 %	± 1.6 %
Liquid Conductivity (mea.)	+ 2.3 %	N	1	0.78	0.71	± 1.8 %	± 1.6 %
Liquid Permittivity (mea.)	+ 1.8 %	N	1	0.23	0.26	± 0.4 %	± 0.5 %
Temp. unc. - Conductivity	± 3.4 %	R	√3	0.78	0.71	± 1.5 %	± 1.4 %
Temp. unc. - Permittivity	± 0.4 %	R	√3	0.23	0.26	± 0.1 %	± 0.1 %
Combined Std. Uncertainty						± 12.1 %	± 12.0 %
Expanded STD Uncertainty (κ =2)						± 24.1 %	± 23.9 %

Note: This uncertainty budget for validation is worst-case.
Table of uncertainties are listed for ISO/IEC 17025.

SECTION10: Parameter Check

The dielectric parameters were checked prior to assessment using the DAK dielectric probe kit.
The dielectric parameters measurement is reported in each correspondent section.

According to KDB 865664 D01, +/- 5 % tolerances are required for εr and σ and then below table which is the target value of the simulated tissue liquid is quoted from KDB 865664 D01.

Target Frequency	Head		Body	
(MHz)	ε_r	σ (S/m)	ε_r	σ (S/m)
150	52.3	0.76	61.9	0.80
300	45.3	0.87	58.2	0.92
450	43.5	0.87	56.7	0.94
835	41.5	0.90	55.2	0.97
900	41.5	0.97	55.0	1.05
915	41.5	0.98	55.0	1.06
1450	40.5	1.20	54.0	1.30
1610	40.3	1.29	53.8	1.40
1800 – 2000	40.0	1.40	53.3	1.52
2450	39.2	1.80	52.7	1.95
3000	38.5	2.40	52.0	2.73
5800	35.3	5.27	48.2	6.00

(ε_r = relative permittivity, σ = conductivity and ρ = 1000 kg/m^3)

The dielectric parameters are linearly interpolated between the closest pair of target frequencies to determine the applicable dielectric parameters corresponding to the device test frequency.

10.1 For SAR system check

DIELECTRIC PARAMETERS MEASUREMENT RESULTS													
Date	Ambient Temp. [deg.c]	Relative Humidity [%]	Liquid type	Liquid Temp. [deg.c]	Measured Frequency [MHz]	Target [σ]	Target [εr]	Measure [σ]	Measure [εr]	Deviation σ [%]	Deviation εr [%]	Limit [%]	Remark
2022/1/5	24.0	40	HBBL600-10000	23.5	2450.0	1.80	39.2	1.80	39.3	-0.2	0.3	+/- 5	
2022/1/11	22.0	40	HBBL600-10000	21.5	5250.0	4.71	35.9	4.76	36.5	1.1	***1.7***	+/- 5	
2022/1/13	22.0	40	HBBL600-10000	21.5	5600.0	5.07	35.5	5.06	36.0	-0.1	1.3	+/- 5	
2022/1/18	22.0	40	HBBL600-10000	21.5	5800.0	5.27	35.3	5.39	35.7	***2.4***	1.1	+/- 5	

10.2 For SAR measurement

DIELECTRIC PARAMETERS MEASUREMENT RESULTS													
Date	Ambient Temp. [deg.c]	Relative Humidity [%]	Liquid type	Liquid Temp. [deg.c]	Measured Frequency [MHz]	Target [σ]	Target [εr]	Measure [σ]	Measure [εr]	Deviation σ [%]	Deviation εr [%]	Limit [%]	Remark
2022/1/5	24.0	40	HBBL600-10000	23.5	2412.0	1.77	39.3	1.77	39.3	0.1	0.1	+/- 5	
2022/1/5	24.0	40	HBBL600-10000	23.5	2437.0	1.79	39.2	1.79	39.3	-0.1	0.2	+/- 5	
2022/1/5	24.0	40	HBBL600-10000	23.5	2462.0	1.81	39.2	1.81	39.3	-0.4	0.3	+/- 5	
2022/1/11	22.0	40	HBBL600-10000	21.5	5260.0	4.72	35.9	4.74	36.4	0.4	1.3	+/- 5	
2022/1/11	22.0	40	HBBL600-10000	21.5	5300.0	4.76	35.9	4.84	36.4	1.7	1.6	+/- 5	
2022/1/11	22.0	40	HBBL600-10000	21.5	5320.0	4.78	35.8	4.87	36.3	1.8	1.3	+/- 5	
2022/1/13	22.0	40	HBBL600-10000	21.5	5510.0	4.97	35.6	5.00	36.3	0.6	***1.8***	+/- 5	
2022/1/13	22.0	40	HBBL600-10000	21.5	5550.0	5.01	35.6	5.02	36.1	0.1	1.5	+/- 5	
2022/1/13	22.0	40	HBBL600-10000	21.5	5670.0	5.14	35.4	5.18	35.8	0.7	1.0	+/- 5	
2022/1/18	22.0	40	HBBL600-10000	21.5	5755.0	5.22	35.4	5.34	35.6	***2.3***	0.8	+/- 5	
2022/1/18	22.0	40	HBBL600-10000	21.5	5795.0	5.26	35.3	5.30	35.7	0.7	1.0	+/- 5	

SECTION11: System Check confirmation

The measurements were performed in the flat section of the TWIN SAM or ELI phantom, shell thickness: 2.0 ±0.2 mm (bottom plate) filled with Body or Head simulating liquid of the following parameters.
The depth of tissue-equivalent liquid in a phantom must be ≥ 15.0 cm ± 0.5 cm for SAR measurements ≤ 3 GHz and ≥ 10.0 cm ± 0.5 cm for measurements > 3 GHz.
The DASY system with an E-Field Probe was used for the measurements.
The dipole was mounted on the small tripod so that the dipole feed point was positioned below the center marking of the flat phantom section and the dipole was oriented parallel to the body axis (the long side of the phantom).
The standard measuring distance was 10 mm (above 1 GHz to 6 GHz) and 15 mm (below 1 GHz) from dipole center to the simulating liquid surface.
The coarse grid with a grid spacing of 12 mm (1 GHz to 3 GHz) and15 mm (below 1 GHz) was aligned with the dipole.
For 5 GHz band - The coarse grid with a grid spacing of 10 mm was aligned with the dipole.
Special 7x7x7 (below 3 GHz) and/or 8x8x7 (above 3 GHz) fine cube was chosen for the cube.
Distance between probe sensors and phantom surface was set to 3 mm.
For 5 GHz band - Distance between probe sensors and phantom surface was set to 2.5 mm
The dipole input power (forward power) was 100 mW(For 5 GHz band) or 250 mW(For other band).
The results are normalized to 1 W input power.

Target Value

Freq [MHz]	Model,S/N	Head	
		(SPEAG) 1 g [W/kg]	(SPEAG) 10 g [W/kg]
2450	D2450V2,713	54.80	25.40
5250	D5GHV2,1020	77.90	22.30
5600	D5GHV2,1020	81.80	23.30
5800	D5GHV2,1020	78.00	22.10

The target(reference) SAR values can be obtained from the calibration certificate of system validation dipoles(Refer to Appendix 3). The target SAR values are SAR measured value in the calibration certificate scaled to 1 W.

Date Tested	Test Freq	Model,S/N	T.S. Liquid		Measured Results		Target (Ref. Value)	Delta ± 10 %
					Zoom Scan	Normalize to 1 W		
2022/1/5	2450	D2450V2,713	Head	1 g	12.80	51.2	54.80	-6.6
				10 g	5.95	23.8	25.40	-6.3
2022/1/11	5250	D5GHV2,1020	Head	1 g	8.01	80.1	77.90	2.8
				10 g	2.28	22.80	22.30	2.2
2022/1/13	5600	D5GHV2,1020	Head	1 g	8.64	86.4	81.80	5.6
				10 g	2.46	24.60	23.30	5.6
2022/1/18	5800	D5GHV2,1020	Head	1 g	8.07	80.70	78.00	3.5
				10 g	2.33	23.30	22.10	5.4

SECTION12: Measured and Reported (Scaled) SAR Results

WLAN SAR Test Reduction criteria are as follows

- **KDB 248227 D01 (SAR Guidance for 802.11(Wi-Fi) Transmitters):**

SAR test reduction for 802.11 WLAN transmission mode configurations are considered separately for DSSS and OFDM. An initial test position is determined to reduce the number of tests required for certain exposure configurations with multiple test positions. An initial test configuration is determined for each frequency band and aggregated band according to maximum output power, channel bandwidth, wireless mode configurations and other operating parameters to streamline the measurement requirements. For 2.4 GHz DSSS, either the initial test position or DSSS procedure is applied to reduce the number of SAR tests; these are mutually exclusive. For OFDM, an initial test position is only applicable to next to the ear, UMPC mini-tablet and hotspot mode configurations, which is tested using the initial test configuration to facilitate test reduction. For other exposure conditions with a fixed test position, SAR test reduction is determined using only the initial test configuration.
The multiple test positions require SAR measurements in head, hotspot mode or UMPC mini-tablet configurations may be reduced according to the highest reported SAR determined using the *initial test position(s)* by applying the DSSS or OFDM SAR measurement procedures in the required wireless mode test configuration(s). The *initial test position(s)* is measured using the highest measured maximum output power channel in the required wireless mode test configuration(s). When the *reported* SAR for the *initial test position* is:

- ≤ 0.4 W/kg, further SAR measurement is not required for the other test positions in that exposure configuration and wireless mode combination within the frequency band or aggregated band. DSSS and OFDM configurations are considered separately according to the required SAR procedures.
- > 0.4 W/kg, SAR is repeated using the same wireless mode test configuration tested in the *initial test position* to measure the subsequent next closet/smallest test separation distance and maximum coupling test position, on the highest maximum output power channel, until the *reported* SAR is ≤ 0.8 W/kg or all required test positions are tested.
    - For subsequent test positions with equivalent test separation distance or when exposure is dominated by coupling conditions, the position for maximum coupling condition should be tested.
    - When it is unclear, all equivalent conditions must be tested.
- For all positions/configurations tested using the *initial test position* and subsequent test positions, when the *reported* SAR is > 0.8 W/kg, measure the SAR for these positions/configurations on the subsequent next highest measured output power channel(s) until the *reported* SAR is ≤ 1.2 W/kg or all required test channels are considered.
    - The additional power measurements required for this step should be limited to those necessary for identifying subsequent highest output power channels to apply the test reduction.
- When the specified maximum output power is the same for both UNII 1 and UNII 2A, begin SAR measurements in UNII 2A with the channel with the highest measured output power. If the reported SAR for UNII 2A is ≤ 1.2 W/kg, SAR is not required for UNII 1; otherwise treat the remaining bands separately and test them independently for SAR.
- When the specified maximum output power is different between UNII 1 and UNII 2A, begin SAR with the band that has the higher specified maximum output. If the highest reported SAR for the band with the highest specified power is ≤ 1.2 W/kg, testing for the band with the lower specified output power is not required; otherwise test the remaining bands independently for SAR.

To determine the *initial test position*, Area Scans were performed to determine the position with the *Maximum Value of SAR (measured)*. The position that produced the highest *Maximum Value of SAR* is considered the worst case position; thus used as the *initial test position*.

SAR Test Reduction criteria(excluding WLAN) are as follows

KDB 447498 D01 (General RF Exposure Guidance):

Testing of other required channels within the operating mode of a frequency band is not required when the reported 1-g or 10-g SAR for the mid-band or highest output power channel is:

- ≤ 0.8 W/kg or 2.0 W/kg, for 1-g or 10-g respectively, when the transmission band is ≤ 100 MHz
- ≤ 0.6 W/kg or 1.5 W/kg, for 1-g or 10-g respectively, when the transmission band is between 100 MHz and 200 MHz
- ≤ 0.4 W/kg or 1.0 W/kg, for 1-g or 10-g respectively, when the transmission band is ≥ 200 MHz

- According to Notice 2016-DRS001 based on the IEEE1528 and IEC 62209 requirements, the low, mid and high frequency channels for the configuration with the highest SAR value must be tested regardless of the SAR value measured.
- When reported SAR value is exceed 1.2 W/kg(if any), device holder perturbation verification is required; however, since distance between device holder and antenna of EUT is enough, it was not conducted.
- Reported SAR= Measured SAR [W/kg] * Power Scaled factor * Duty Scaled factor
  Maximum tune-up tolerance limit is by the specification from a customer.
  * Power Scaled factor = Maximum tune-up tolerance limit [mW] / Measured power [mW]
  * Duty Scaled factor = 1 / Duty (%) / 100
- Maximum tune-up tolerance limit is by the specification from a customer.

Note: Measured value is rounded round off to three decimal places

12.1 WLAN 2.4 GHz Band

Test Position	Dist. (mm)	Mode	Freq. (MHz)	Power (dBm)		Power Scaled factor	Duty (%)	Duty Scaled factor	1-g SAR (W/kg)		Plot No.
				Tune-up upper Power	Measured average Power				Meas.	Reported	
Top	0	11b	2412	16.50	15.87	1.16	99.4	1.01	0.392	0.456	
			2437	16.50	15.78	1.18	99.4	1.01	0.384	0.456	1
			2462	16.50	16.17	1.08	99.4	1.01	0.391	0.425	
Front	0	11b	2412	16.50	15.87	1.16	99.4	1.01			
			2437	16.50	15.78	1.18	99.4	1.01			
			2462	16.50	16.17	1.08	99.4	1.01	0.143	0.155	
Rear	0	11b	2412	16.50	15.87	1.16	99.4	1.01			
			2437	16.50	15.78	1.18	99.4	1.01			
			2462	16.50	16.17	1.08	99.4	1.01	0.076	0.083	
Right	0	11b	2412	16.50	15.87	1.16	99.4	1.01			
			2437	16.50	15.78	1.18	99.4	1.01			
			2462	16.50	16.17	1.08	99.4	1.01	0.041	0.045	

OFDM was excluded from the following table according to KDB 248227 D01.
SAR is not required for the following 2.4 GHz OFDM conditions according to KDB 248227 D01.
1) When KDB 447498 D01 SAR test exclusion applies to the OFDM configuration.
2) When the highest reported SAR for DSSS is adjusted by the ratio of OFDM to DSSS specified maximum output power and the adjusted SAR is ≤ 1.2 W/kg.

Maximum tune-up tolerance limit		Maximum tune-up tolerance limit		OFDM scaled factor	Position	DSSS Reported SAR value [W/kg]	OFDM Estimated SAR value [W/kg]	Exclusion limit [W/kg]	**Standalone SAR request**
DSSS		OFDM							
[dBm]	[mW]	[dBm]	[mW]						
16.50	44.67	16.50	44.67	1.000	Top	0.456	0.456	< 1.2	**No**

Note(s):
- OFDM scaled factor = Maximum tune-up tolerance limit of OFDM [mW] / Maximum tune-up tolerance limit of DSSS [mW]
- Estimated SAR of OFDM= Reported SAR of DSSS[W/kg] · OFDM scaled factor

12.2 WLAN 5.3 GHz Band

Test Position	Dist. (mm)	Mode	Ch #.	Freq. (MHz)	Power (dBm)		Power Scaled factor	Duty (%)	Duty Scaled factor	1-g SAR (W/kg)		Plot No.
					Tune-up upper Power	Measured average Power				Meas.	Reported	
Top	0	11a	52	5260	13.50	12.00	1.41	95.6	1.05	0.305	0.450	
			60	5300	14.50	12.86	1.46	95.6	1.05	0.397	0.606	2
			64	5320	14.50	12.92	1.44	95.6	1.05	0.370	0.557	
Front	0	11a	52	5260	13.50	12.00	1.41	95.6	1.05			
			60	5300	14.50	12.86	1.46	95.6	1.05			
			64	5320	14.50	12.92	1.44	95.6	1.05	0.093	0.140	
Rear	0	11a	52	5260	13.50	12.00	1.41	95.6	1.05			
			60	5300	14.50	12.86	1.46	95.6	1.05			
			64	5320	14.50	12.92	1.44	95.6	1.05	0.178	0.268	
Right	0	11a	52	5260	13.50	12.00	1.41	95.6	1.05			
			60	5300	14.50	12.86	1.46	95.6	1.05			
			64	5320	14.50	12.92	1.44	95.6	1.05	0.064	0.096	

Subsequent test configuration was excluded from the following table according to KDB 248227 D01.
SAR is not required for the following exclusion conditions according to KDB 248227 D01.
When the highest reported SAR for initial test configuration is adjusted by the ratio of Subsequent test configuration to initial test configuration specified maximum output power and the adjusted SAR is ≤ 1.2 W/kg.

Maximum tune-up tolerance limit		Maximum tune-up tolerance limit		Scaled factor	Position	11a Reported SAR value [W/kg]	11n20 Estimated SAR value [W/kg]	Exclusion limit [W/kg]	**Standalone SAR request**
11a		11n20							
[dBm]	[mW]	[dBm]	[mW]						
14.50	28.18	14.50	28.18	1.000	Top	0.606	0.606	< 1.2	**No**
Maximum tune-up tolerance limit		Maximum tune-up tolerance limit		Scaled factor	Position	11a Reported SAR value [W/kg]	11n40 Estimated SAR value [W/kg]	Exclusion limit [W/kg]	**Standalone SAR request**
11a		11n40							
[dBm]	[mW]	[dBm]	[mW]						
14.50	28.18	13.50	22.39	0.794	Top	0.606	0.481	< 1.2	**No**
Maximum tune-up tolerance limit		Maximum tune-up tolerance limit		Scaled factor	Position	11a Reported SAR value [W/kg]	11ac20 Estimated SAR value [W/kg]	Exclusion limit [W/kg]	**Standalone SAR request**
11a		11ac20							
[dBm]	[mW]	[dBm]	[mW]						
14.50	28.18	14.50	28.18	1.000	Top	0.606	0.606	< 1.2	**No**
Maximum tune-up tolerance limit		Maximum tune-up tolerance limit		Scaled factor	Position	11a Reported SAR value [W/kg]	11ac40 Estimated SAR value [W/kg]	Exclusion limit [W/kg]	**Standalone SAR request**
11a		11ac40							
[dBm]	[mW]	[dBm]	[mW]						
14.50	28.18	13.50	22.39	0.794	Top	0.606	0.481	< 1.2	**No**
Maximum tune-up tolerance limit		Maximum tune-up tolerance limit		Scaled factor	Position	11a Reported SAR value [W/kg]	11ac80 Estimated SAR value [W/kg]	Exclusion limit [W/kg]	**Standalone SAR request**
11a		11ac80							
[dBm]	[mW]	[dBm]	[mW]						
14.50	28.18	11.50	14.13	0.501	Top	0.606	0.304	< 1.2	**No**

Notes:

- Scaled factor = Maximum tune-up tolerance limit of subsequent test configuration [mW] / Maximum tune-up tolerance limit of initial test configuration [mW]
- Estimated SAR of subsequent test configuration = Reported SAR of initial test configuration [W/kg] ·scaled factor

U-NII-1 band(WLAN 5.2 GHz Band) test configuration was excluded from the following according to KDB 248227 D01.
When the same maximum output power is specified for both bands, begin SAR measurement in U-NII-2A band(WLAN 5.3 GHz Band) by applying the OFDM SAR requirements. If the highest reported SAR for a test configuration is ≤ 1.2 W/kg, SAR is not required for U-NII-1 band for that configuration (802.11 mode and exposure condition); otherwise, each band is tested independently for SAR.

Maximum tune-up tolerance limit		Maximum tune-up tolerance limit		Scaled factor	Position	5.3 GHz Reported SAR value [W/kg]	5.2 GHz Estimated SAR value [W/kg]	Exclusion limit [W/kg]	**Standalone SAR request**
5.3 GHz		5.2 GHz							
[dBm]	[mW]	[dBm]	[mW]						
14.50	28.18	14.50	28.18	1.000	Top	0.540	0.540	< 1.2	**No**

Notes:
- Scaled factor = Maximum tune-up tolerance limit of 5.2 GHz [mW] / Maximum tune-up tolerance limit of 5.3 GHz [mW]
- Estimated SAR of subsequent test configuration = Reported SAR of initial test configuration [W/kg] ·scaled factor

12.3 WLAN 5.5GHz Band

Test Position	Dist. (mm)	Mode	Ch #.	Freq. (MHz)	Power (dBm)		Power Scaled factor	Duty (%)	Duty Scaled factor	1-g SAR (W/kg)		Plot No.
					Tune-up upper Power	Measured average Power				Meas.	Reported	
Top	0	11n40	102	5510	14.50	13.85	1.16	90.8	1.10	0.569	0.728	
			110	5550	13.50	12.61	1.23	90.8	1.10	0.478	0.646	
			134	5670	14.50	13.01	1.41	90.8	1.10	0.515	0.799	3
Front	0	11n40	102	5510	14.50	13.85	1.16	90.8	1.10	0.157	0.201	
			110	5550	13.50	12.61	1.23	90.8	1.10			
			134	5670	14.50	13.01	1.41	90.8	1.10			
Rear	0	11n40	102	5510	14.50	13.85	1.16	90.8	1.10	0.273	0.349	
			110	5550	13.50	12.61	1.23	90.8	1.10			
			134	5670	14.50	13.01	1.41	90.8	1.10			
Right	0	11n40	102	5510	14.50	13.85	1.16	90.8	1.10	0.096	0.123	
			110	5550	13.50	12.61	1.23	90.8	1.10			
			134	5670	14.50	13.01	1.41	90.8	1.10			

Subsequent test configuration was excluded from the following table according to KDB 248227 D01.
SAR is not required for the following exclusion conditions according to KDB 248227 D01.
When the highest reported SAR for initial test configuration is adjusted by the ratio of Subsequent test configuration to initial test configuration specified maximum output power and the adjusted SAR is ≤ 1.2 W/kg.

Maximum tune-up tolerance limit		Maximum tune-up tolerance limit		Scaled factor	Position	11n40 Reported SAR value [W/kg]	11a Estimated SAR value [W/kg]	Exclusion limit [W/kg]	**Standalone SAR request**
11n40		11a							
[dBm]	[mW]	[dBm]	[mW]						
14.50	28.18	14.50	28.18	1.000	Top	0.799	0.799	< 1.2	**No**
Maximum tune-up tolerance limit		Maximum tune-up tolerance limit		Scaled factor	Position	11n40 Reported SAR value [W/kg]	11n20 Estimated SAR value [W/kg]	Exclusion limit [W/kg]	**Standalone SAR request**
11n40		11n20							
[dBm]	[mW]	[dBm]	[mW]						
14.50	28.18	14.50	28.18	1.000	Top	0.799	0.799	< 1.2	**No**
Maximum tune-up tolerance limit		Maximum tune-up tolerance limit		Scaled factor	Position	11n40 Reported SAR value [W/kg]	11ac20 Estimated SAR value [W/kg]	Exclusion limit [W/kg]	**Standalone SAR request**
11n40		11ac20							
[dBm]	[mW]	[dBm]	[mW]						
14.50	28.18	14.50	28.18	1.000	Top	0.799	0.799	< 1.2	**No**
Maximum tune-up tolerance limit		Maximum tune-up tolerance limit		Scaled factor	Position	11n40 Reported SAR value [W/kg]	11ac40 Estimated SAR value [W/kg]	Exclusion limit [W/kg]	**Standalone SAR request**
11n40		11ac40							
[dBm]	[mW]	[dBm]	[mW]						
14.50	28.18	14.50	28.18	1.000	Top	0.799	0.799	< 1.2	**No**
Maximum tune-up tolerance limit		Maximum tune-up tolerance limit		Scaled factor	Position	11n40 Reported SAR value [W/kg]	11ac80 Estimated SAR value [W/kg]	Exclusion limit [W/kg]	**Standalone SAR request**
11n40		11ac80							
[dBm]	[mW]	[dBm]	[mW]						
14.50	28.18	13.50	22.39	0.794	Top	0.799	0.635	< 1.2	**No**

Notes:

- Scaled factor = Maximum tune-up tolerance limit of subsequent test configuration [mW] / Maximum tune-up tolerance limit of initial test configuration [mW]
- Estimated SAR of subsequent test configuration = Reported SAR of initial test configuration [W/kg] ·scaled factor

12.4 WLAN 5.8GHz Band

Test Position	Dist. (mm)	Mode	Ch #.	Freq. (MHz)	Power (dBm)		Power Scaled factor	Duty (%)	Duty Scaled factor	1-g SAR (W/kg)		Plot No.
					Tune-up upper Power	Measured average Power				Meas.	Reported	
Top	0	11n40	151	5755	14.50	12.94	1.43	90.8	1.10	0.465	0.733	
			159	5795	15.50	13.84	1.47	90.8	1.10	0.575	0.927	4
Front	0	11n40	151	5755	14.50	12.94	1.43	90.8	1.10			
			159	5795	15.50	13.84	1.47	90.8	1.10	0.139	0.224	
Rear	0	11n40	151	5755	14.50	12.94	1.43	90.8	1.10			
			159	5795	15.50	13.84	1.47	90.8	1.10	0.221	0.356	
Right	0	11n40	151	5755	14.50	12.94	1.43	90.8	1.10			
			159	5795	15.50	13.84	1.47	90.8	1.10	0.102	0.165	

Subsequent test configuration was excluded from the following table according to KDB 248227 D01.
SAR is not required for the following exclusion conditions according to KDB 248227 D01.
When the highest reported SAR for initial test configuration is adjusted by the ratio of Subsequent test configuration to initial test configuration specified maximum output power and the adjusted SAR is ≤ 1.2 W/kg.

Maximum tune-up tolerance limit		Maximum tune-up tolerance limit		Scaled factor	Position	11n40 Reported SAR value [W/kg]	11a Estimated SAR value [W/kg]	Exclusion limit [W/kg]	**Standalone SAR request**
11n40		11a							
[dBm]	[mW]	[dBm]	[mW]						
15.50	35.48	14.50	28.18	0.794	Top	0.927	0.736	< 1.2	**No**
Maximum tune-up tolerance limit		Maximum tune-up tolerance limit		Scaled factor	Position	11n40 Reported SAR value [W/kg]	11n20 Estimated SAR value [W/kg]	Exclusion limit [W/kg]	**Standalone SAR request**
11n40		11n20							
[dBm]	[mW]	[dBm]	[mW]						
15.50	35.48	14.50	28.18	0.794	Top	0.927	0.736	< 1.2	**No**
Maximum tune-up tolerance limit		Maximum tune-up tolerance limit		Scaled factor	Position	11n40 Reported SAR value [W/kg]	11ac20 Estimated SAR value [W/kg]	Exclusion limit [W/kg]	**Standalone SAR request**
11n40		11ac20							
[dBm]	[mW]	[dBm]	[mW]						
15.50	35.48	14.50	28.18	0.794	Top	0.927	0.736	< 1.2	**No**
Maximum tune-up tolerance limit		Maximum tune-up tolerance limit		Scaled factor	Position	11n40 Reported SAR value [W/kg]	11ac40 Estimated SAR value [W/kg]	Exclusion limit [W/kg]	**Standalone SAR request**
11n40		11ac40							
[dBm]	[mW]	[dBm]	[mW]						
15.50	35.48	15.50	35.48	1.000	Top	0.927	0.927	< 1.2	**No**
Maximum tune-up tolerance limit		Maximum tune-up tolerance limit		Scaled factor	Position	11n40 Reported SAR value [W/kg]	11ac80 Estimated SAR value [W/kg]	Exclusion limit [W/kg]	**Standalone SAR request**
11n40		11ac80							
[dBm]	[mW]	[dBm]	[mW]						
15.50	35.48	14.50	28.18	0.794	Top	0.927	0.736	< 1.2	**No**

Notes:

- Scaled factor = Maximum tune-up tolerance limit of subsequent test configuration [mW] / Maximum tune-up tolerance limit of initial test configuration [mW]
- Estimated SAR of subsequent test configuration = Reported SAR of initial test configuration [W/kg] ·scaled factor

12.5 Repeated measurement

According to KDB 865664 D1.
1) Repeated measurement is not required when the original highest measured SAR is < 0.80 W/kg; steps 2) through 4) do not apply.
2) When the original highest measured SAR is ≥ 0.80 W/kg, repeat that measurement once.
3) Perform a second repeated measurement only if the ratio of largest to smallest SAR for the original and first repeated measurements is > 1.20 or when the original or repeated measurement is ≥ 1.45 W/kg (~ 10 % from the 1-g SAR limit).
4) Perform a third repeated measurement only if the original, first or second repeated measurement is ≥ 1.5 W/kg and the ratio of largest to smallest SAR for the original, first and second repeated measurements is > 1.20.

Wireless Technologies	Test Configuration				Mode	Freq. (MHz)	Meas. SAR (W/kg)		Largest to Smallest SAR Ratio
	Transmit Antenna	Exposure	Position	Dist. (mm)			Original	Repeated	
WLAN 2.4 GHz	Main	Body	Top	0	11b	2412	0.392	N/A	N/A
WLAN 5.3 GHz	Main	Body	Top	0	11a	5300	0.397	N/A	N/A
WLAN 5.5 GHz	Main	Body	Top	0	11n40	5510	0.569	N/A	N/A
WLAN 5.8 GHz	Main	Body	Top	0	11n40	5795	0.575	N/A	N/A

Note(s):
N/A: Repeated Measurement is not required since the original highest measured SAR for all band is < 0.80 W/kg.

SECTION13: Test instruments

Local Id	LIMS ID	Description	Manufacturer	Model	Serial	Last Cal Date	Interval
MDAE-03	141484	Data Acquisition Electronics	Schmid&Partner Engineering AG	DAE4	1372	2021/08/10	12
MPB-09	141589	Dosimetric E-Field Probe	Schmid&Partner Engineering AG	EX3DV4	3922	2021/08/16	12
MDA-07	141457	Dipole Antenna	Schmid&Partner Engineering AG	D2450V2	713	2019/09/09	36
MDA-08	141467	Dipole Antenna	Schmid&Partner Engineering AG	D5GHzV2	1020	2021/11/18	12
MPF-03	142057	2mm Oval Flat Phantom	Schmid&Partner Engineering AG	QDOVA001BB	1203	2021/05/28	12
MDH-04	142489	Device holder	Schmid&Partner Engineering AG	Mounting device for transmitte	-	2021/11/01	12
MOS-35	141573	Digital thermometer	HANNA	Checktemp 4	-	2021/07/08	12
MRBT-03	142248	SAR robot	Schmid&Partner Engineering AG	TX60 Lspeag	F13/5PP1D1/A	2021/04/20	12
COTS-MSAR-04	141182	Dielectric assessment software	Schmid&Partner Engineering AG	DAK	-	-	-
COTS-MPSE-02	173900	Software for MA24106A	Anritsu Corporation	Anritsu PowerXpert	-	-	-
MDPK-03	141471	Dielectric assessment kit	Schmid&Partner Engineering AG	DAKS-3.5	0008	2021/04/14	12
MAT-78	142313	Attenuator	Telegrartner	J01156A0011	42294119	-	-
MPM-15	141811	Power Meter	Keysight Technologies Inc	N1914A	MY53060017	2021/06/08	12
MNA-03	141551	Vector Reflectometer	COPPER MOUNTAIN TECHNOLOGIES	PLANAR R140	0030913	2021/04/19	12
MOS-37	141574	Digital thermometer	LKM electronic	DTM3000	-	2021/07/08	12
MPSE-20	141833	Power sensor	Keysight Technologies Inc	N8482H	MY53050001	2021/06/08	12
MPSE-24	141843	Power sensor	Anritsu Corporation	MA24106A	1026164	2021/08/17	12
MPSE-25	141844	Power sensor	Anritsu Corporation	MA24106A	1031504	2021/08/17	12
MRFA-24	141875	Pre Amplifier	R&K	R&K CGA020M602-2633R	B30550	2021/06/16	12
MHBBL600-10000	176484	Head Simulating Liquid	Schmid & Partner Engineering AG	HBBL600-10000V6	SL AAH U16 B	-	-
COTS-MSAR-03	141181	Dasy5	Schmid&Partner Engineering AG	DASY5	-	-	-
MSG-10	141890	Signal Generator	Keysight Technologies Inc	N5181A	MY47421098	2021/11/18	12
MHDC-12	142559	Dual Directional Coupler	Hewlett Packard	772D	2839A0016	-	-

***Hyphens for Calibration Due Date and Cal Int (month) are instruments that Calibration is not required (e.g. software), or instruments checked in advance before use.**

The expiration date of the calibration is the end of the expired month.
All equipment is calibrated with valid calibrations. Each measurement data is traceable to the national or international standards.
As for some calibrations performed after the tested dates, those test equipment have been controlled by means of an unbroken chains of calibrations.

SAR room is checked before every testing and ambient noise is <0.012 W/kg

APPENDIX 1 : System Check

2450MHz System Check
Communication System: UID 0, CW (0); Communication System Band: D2450 (2450.0 MHz); ; Duty Cycle: 1:1
Medium parameters used: f = 2450 MHz; σ = 1.796 S/m; ε_r = 39.306; ρ = 1000 kg/m^3
Phantom section: Flat Section
DASY5 Configuration
Probe: EX3DV4 - SN3922; ConvF(7.83, 7.83, 7.83) @ 2450 MHz;
Sensor-Surface: 1.4 mm (Mechanical Surface Detection)
Electronics: DAE4 Sn1372;
Phantom: ELI v5.0 (20deg probe tilt); Type: QDOVA001BB;Serial: TP:1203
Measurement SW: DASY52, Version 52.10 (4);SEMCAD X Version 14.6.14 (7501)

Body System Performance Check at Frequencies 2450 MHz/d = 12 mm, Pin = 250 mW/Area Scan (81x71x1):
Interpolated grid: dx = 1.200 mm, dy = 1.200 mm
Maximum value of SAR (interpolated) = 21.7 W/kg

Body System Performance Check at Frequencies 2450 MHz/d = 12 mm, Pin = 250 mW/Zoom Scan (7x7x7)/Cube 0: Measurement grid: dx = 5 mm, dy = 5 mm, dz = 5 mm
Reference Value = 112.9 V/m; Power Drift = 0.02 dB
Peak SAR (extrapolated) = 26.1 W/kg
SAR(1 g) = 12.8 W/kg; SAR(10 g) = 5.95 W/kg
Smallest distance from peaks to all points 3 dB below = 9 mm
Ratio of SAR at M2 to SAR at M1 = 49.3 %
Maximum value of SAR (measured) = 21.1 W/kg

Body System Performance Check at Frequencies 2450 MHz/d = 12 mm, Pin = 250 mW/Z Scan (1x1x18):
Measurement grid: dx = 20 mm, dy = 20 mm, dz = 5 mm
Penetration depth = 7.396 (7.085, 7.620) [mm]
Maximum value of SAR (interpolated) = 25.5 W/kg

Ambient Temp. : 24.0 degree.C. Liquid Temp.; 23.5 degree.C.
Liquid temp. is kept within the 2 degree.C. during the test.
Date: 2022/01/05

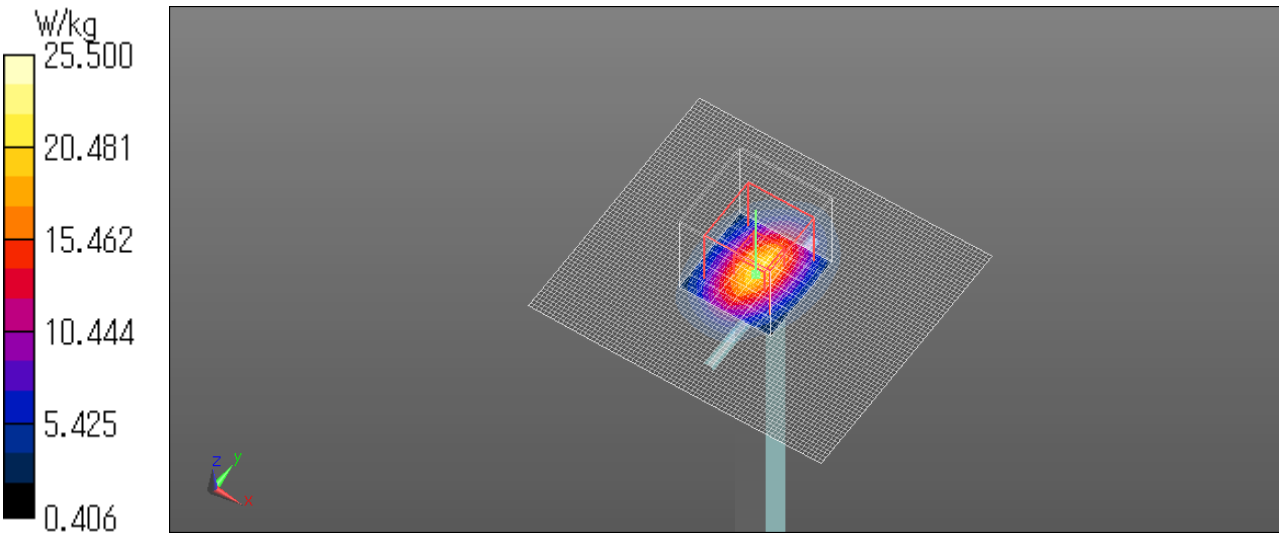

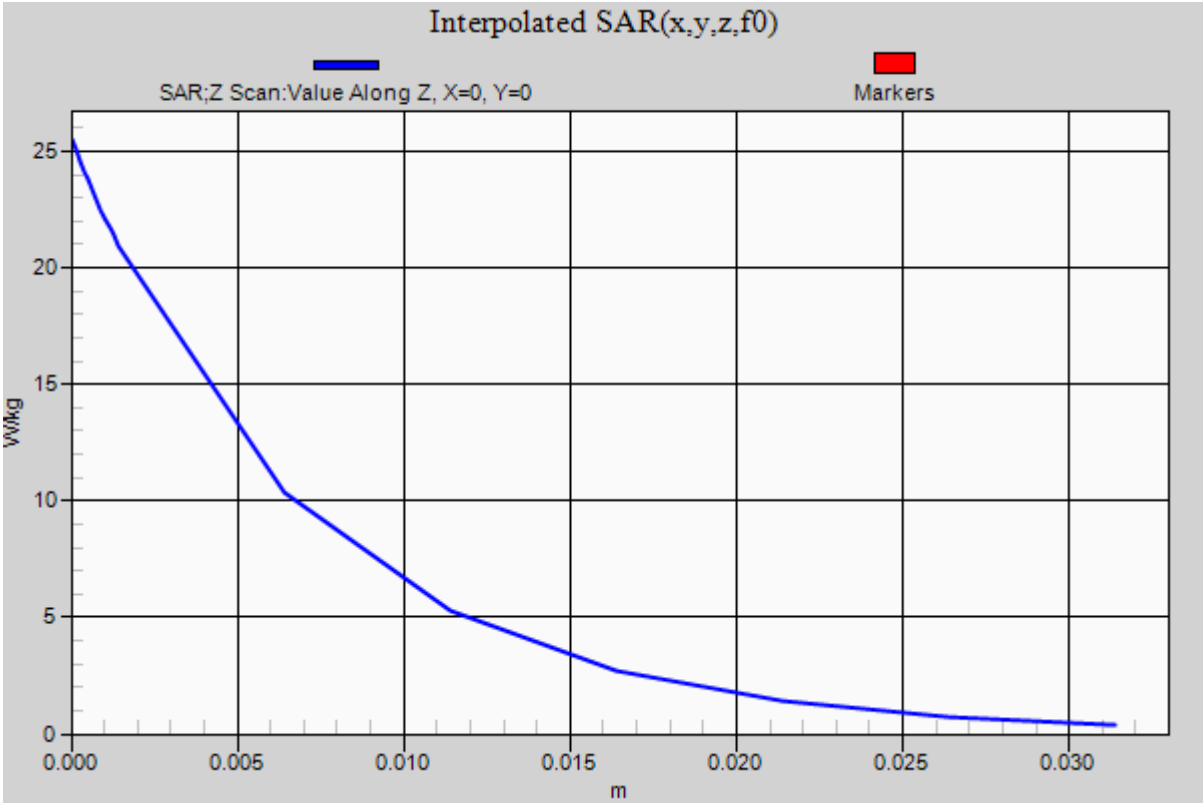
Interpolated SAR(x,y,z,f0)
SAR;Z Scan:Value Along Z, X=0, Y=0
Markers
W/kg
25
20
15
10
5
0
0.000
0.005
0.010
0.015
0.020
0.025
0.030
m

5250MHz System Check
Communication System: UID 0, #CW (0); Communication System Band: D5GHz (5000.0 - 6000.0 MHz); ; Duty Cycle: 1:1
Medium parameters used: f = 5250 MHz; σ = 4.757 S/m; ε_r = 36.523; ρ = 1000 kg/m^3
Phantom section: Flat Section
DASY5 Configuration
Probe: EX3DV4 - SN3922; ConvF(5.54, 5.54, 5.54) @ 5250 MHz;
Sensor-Surface: 1.4 mm (Mechanical Surface Detection)
Electronics: DAE4 Sn1372;
Phantom: ELI v5.0 (20deg probe tilt); Type: QDOVA001BB;Serial: TP:1203
Measurement SW: DASY52, Version 52.10 (4);SEMCAD X Version 14.6.14 (7501)

Pin/5250 MHz in 100 mW/Area Scan (91x91x1): Interpolated grid: dx = 1.000 mm, dy = 1.000 mm
Maximum value of SAR (interpolated) = 18.8 W/kg

Pin/5250 MHz in 100 mW/Zoom Scan (4x4x1.4 mm, graded), dist = 1.4 mm (8x8x7)/Cube 0: Measurement grid: dx = 4 mm, dy = 4 mm, dz = 1.4 mm
Reference Value = 72.22 V/m; Power Drift = -0.09 dB
Peak SAR (extrapolated) = 31.5 W/kg
SAR(1 g) = 8.01 W/kg; SAR(10 g) = 2.28 W/kg
Smallest distance from peaks to all points 3 dB below = 7.2 mm
Ratio of SAR at M2 to SAR at M1 = 66.3 %
Maximum value of SAR (measured) = 18.6 W/kg

Pin/5250 MHz in 100 mW/Z Scan (1x1x18): Measurement grid: dx = 20 mm, dy = 20 mm, dz = 5 mm
Penetration depth = 3.206 (3.455, 3.170) [mm]
Maximum value of SAR (interpolated) = 26.6 W/kg

Ambient Temp. : 22.0 degree.C. Liquid Temp.; 21.5 degree.C.
Liquid temp. is kept within the 2 degree.C. during the test.
Date: 2022/01/11

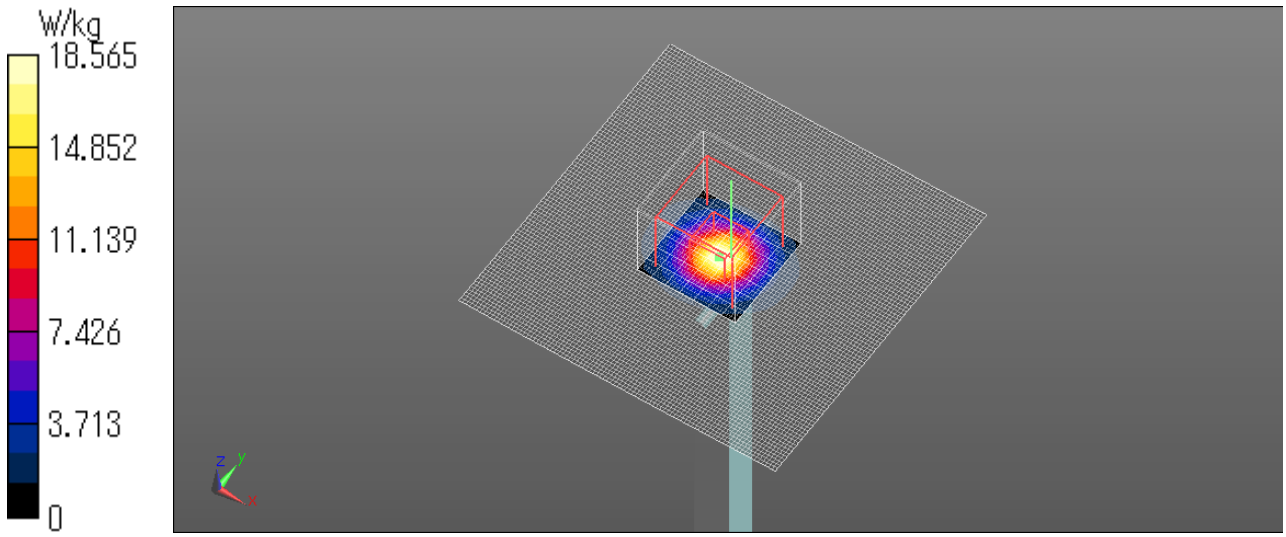

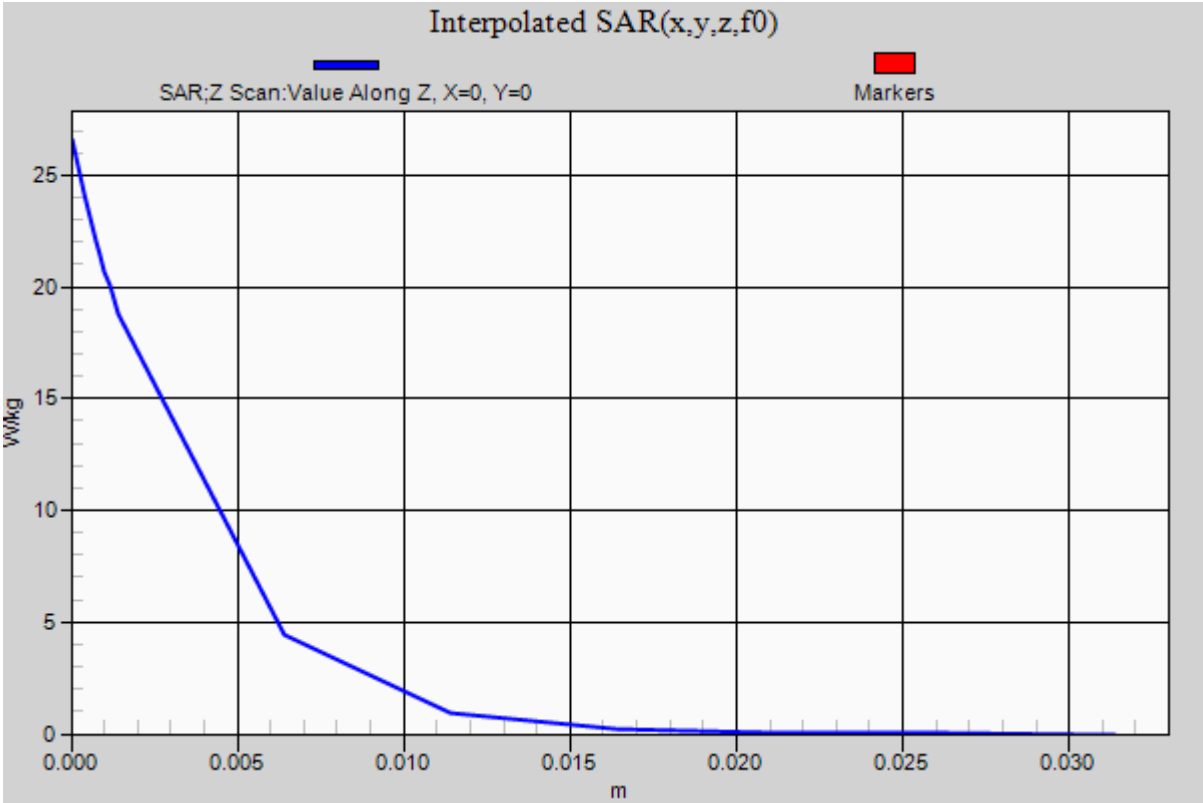
Interpolated SAR(x,y,z,f0)
SAR;Z Scan:Value Along Z, X=0, Y=0
Markers
W/kg
25
20
15
10
5
0
0.000
0.005
0.010
0.015
0.020
0.025
0.030
m

5600MHz System Check
Communication System: UID 0, #CW (0); Communication System Band: D5GHz (5000.0 - 6000.0 MHz); ; Duty Cycle: 1:1
Medium parameters used: f = 5600 MHz; σ = 5.059 S/m; ε_r = 36.005; ρ = 1000 kg/m^3
Phantom section: Flat Section
DASY5 Configuration
Probe: EX3DV4 - SN3922; ConvF(4.61, 4.61, 4.61) @ 5600 MHz;
Sensor-Surface: 1.4 mm (Mechanical Surface Detection (Locations From Previous Scan Used)), Sensor-Surface: 1.4 mm (Mechanical Surface Detection)
Electronics: DAE4 Sn1372;
Phantom: ELI v5.0 (20deg probe tilt); Type: QDOVA001BB;Serial: TP:1203
Measurement SW: DASY52, Version 52.10 (4);SEMCAD X Version 14.6.14 (7501)

Pin/5600 MHz in 100 mW/Area Scan (91x91x1): Interpolated grid: dx = 1.000 mm, dy = 1.000 mm
Maximum value of SAR (interpolated) = 20.6 W/kg

Pin/5600 MHz in 100 mW/Zoom Scan (4x4x1.4 mm, graded), dist=1.4 mm (8x8x7)/Cube 0: Measurement grid: dx = 4 mm, dy = 4 mm, dz = 1.4 mm
Reference Value = 73.73 V/m; Power Drift = 0.06 dB
Peak SAR (extrapolated) = 37.1 W/kg
SAR(1 g) = 8.64 W/kg; SAR(10 g) = 2.46 W/kg
Smallest distance from peaks to all points 3 dB below = 7.2 mm
Ratio of SAR at M2 to SAR at M1 = 63.1%
Maximum value of SAR (measured) = 20.7 W/kg

Pin/5600 MHz in 100 mW/Z Scan (1x1x18): Measurement grid: dx = 20 mm, dy = 20 mm, dz = 5 mm
Penetration depth = 2.947 (3.164, 2.860) [mm]
Maximum value of SAR (interpolated) = 30.8 W/kg

Ambient Temp. : 22.0 degree.C. Liquid Temp.; 21.5 degree.C.
Liquid temp. is kept within the 2 degree.C. during the test.
Date: 2022/01/13

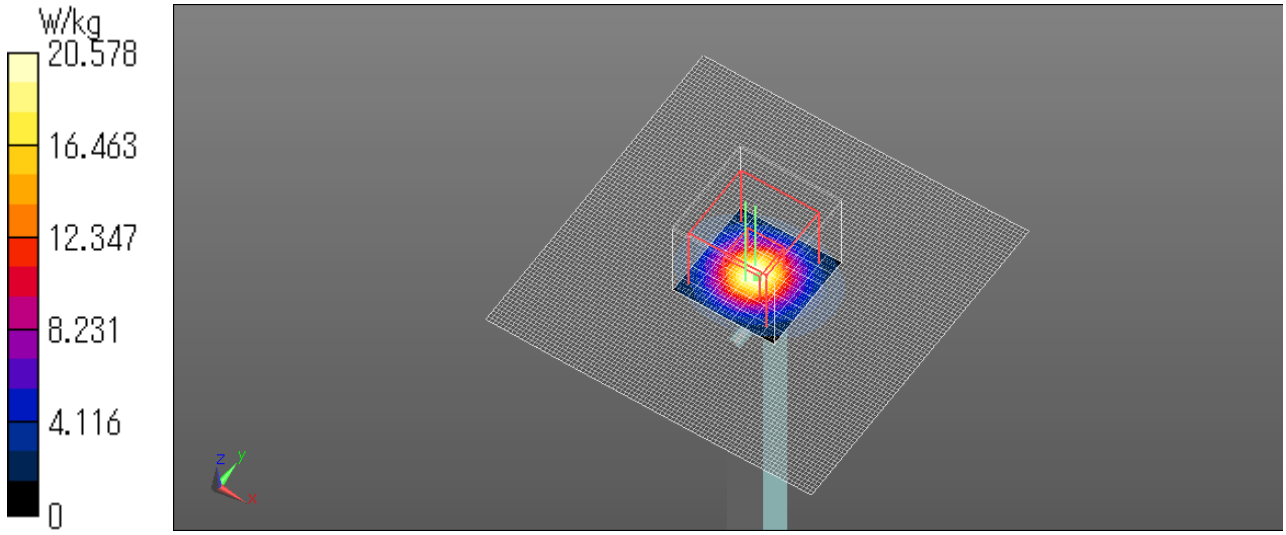

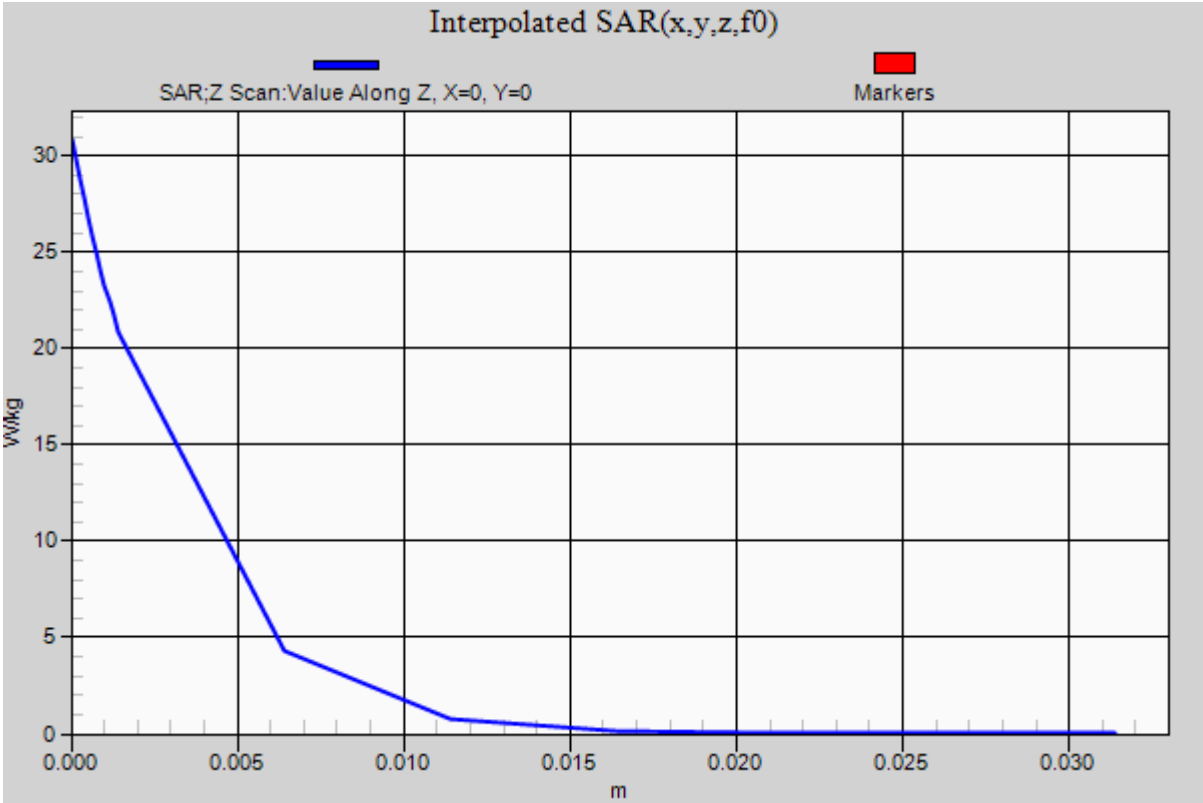
Interpolated SAR(x,y,z,f0)
SAR;Z Scan:Value Along Z, X=0, Y=0
Markers
W/kg
30
25
20
15
10
5
0
0.000
0.005
0.010
0.015
0.020
0.025
0.030
m

5800MHz System Check
Communication System: UID 0, #CW (0); Communication System Band: D5GHz (5000.0 - 6000.0 MHz); ; Duty Cycle: 1:1
Medium parameters used: f = 5800 MHz; σ = 5.394 S/m; ε_r = 35.677; ρ = 1000 kg/m^3
Phantom section: Flat Section
DASY5 Configuration
Probe: EX3DV4 - SN3922; ConvF(4.82, 4.82, 4.82) @ 5800 MHz;
Sensor-Surface: 1.4 mm (Mechanical Surface Detection (Locations From Previous Scan Used)), Sensor-Surface: 1.4 mm (Mechanical Surface Detection)
Electronics: DAE4 Sn1372;
Phantom: ELI v5.0 (20deg probe tilt); Type: QDOVA001BB;Serial: TP:1203
Measurement SW: DASY52, Version 52.10 (4);SEMCAD X Version 14.6.14 (7501)

Pin/5800 MHz in 100 mW/Area Scan (91x91x1): Interpolated grid: dx = 1.000 mm, dy = 1.000 mm
Maximum value of SAR (interpolated) = 19.3 W/kg

Pin/5800 MHz in 100 mW/Zoom Scan (4x4x1.4mm, graded), dist = 1.4 mm (8x8x7)/Cube 0: Measurement grid: dx = 4 mm, dy = 4 mm, dz = 1.4 mm
Reference Value = 69.14 V/m; Power Drift = 0.02 dB
Peak SAR (extrapolated) = 36.5 W/kg
SAR(1 g) = 8.07 W/kg; SAR(10 g) = 2.33 W/kg
Smallest distance from peaks to all points 3 dB below = 7.4 mm
Ratio of SAR at M2 to SAR at M1 = 61.2 %
Maximum value of SAR (measured) = 19.6 W/kg

Pin/5800 MHz in 100 mW/Z Scan (1x1x18): Measurement grid: dx = 20 mm, dy = 20 mm, dz = 5 mm
Penetration depth = 2.806 (3.034, 2.727) [mm]
Maximum value of SAR (interpolated) = 29.0 W/kg

Ambient Temp. : 22.0 degree.C. Liquid Temp.; 21.5 degree.C.
Liquid temp. is kept within the 2 degree.C. during the test.
Date: 2022/01/18

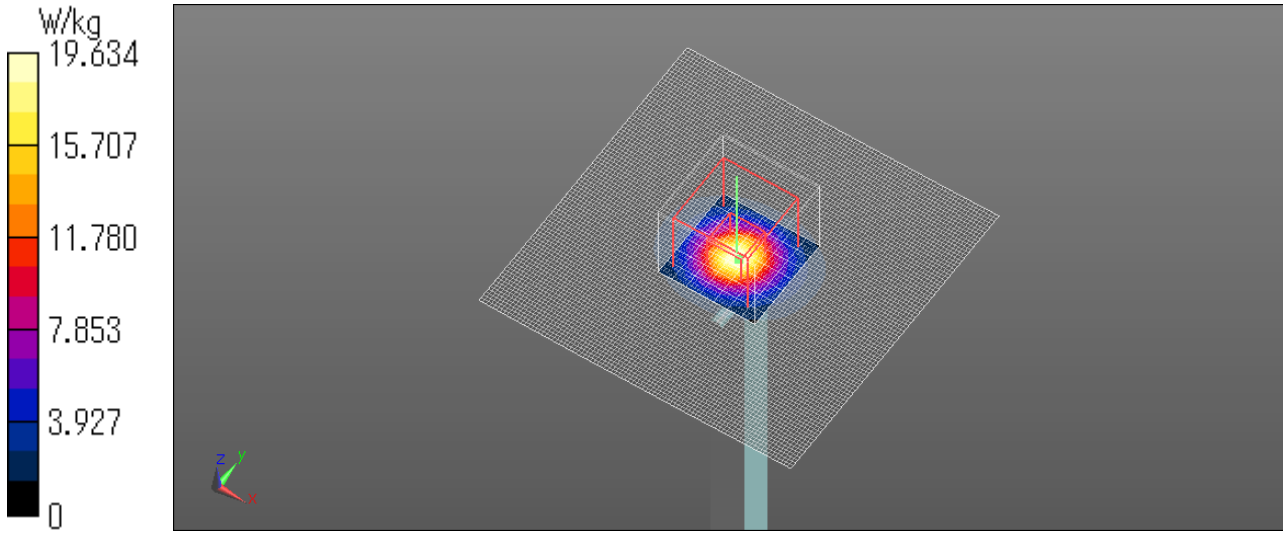

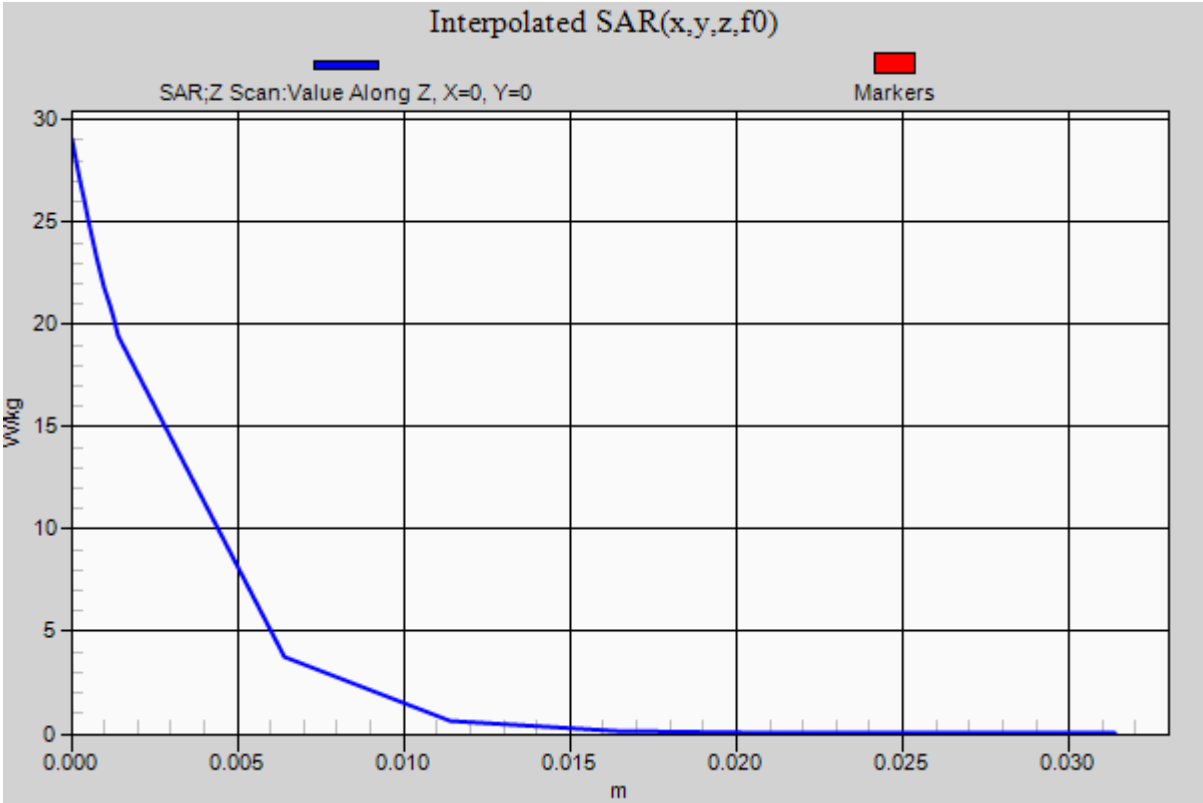
Interpolated SAR(x,y,z,f0)
SAR;Z Scan:Value Along Z, X=0, Y=0
Markers
W/kg
30
25
20
15
10
5
0
0.000
0.005
0.010
0.015
0.020
0.025
0.030
m

APPENDIX 2 : SAR Measurement data

Evaluation procedure

The evaluation was performed with the following procedure:

Step 1: Measurement of the E-field at a fixed location above the ear point or central position of flat phantom was used as a reference value for assessing the power drop.

Step 2: The SAR distribution at the exposed side of head or body position was measured at a distance of each device from the inner surface of the shell. The area covered the entire dimension of the antenna of EUT and the horizontal grid spacing was 15 mm x 15 mm, 12 mm x 12 mm or 10 mm x 10 mm. Based on these data, the area of the maximum absorption was determined by spline interpolation.

Step 3: Around this point found in the Step 2 (area scan), a volume of 30 mm x 30 mm x 30 mm or more was assessed by measuring 7 x 7 x 7 points at least for below 3 GHz and a volume of 28 mm x 28 mm x 22.5 mm or more was assessed by measuring 8 x 8 x 6(ratio step method (*1)) points at least for 5 GHz band.

And for any secondary peaks found in the Step2 which are within 2 dB of maximum peak and not with this Step3 (Zoom scan) is repeated. On the basis of this data set, the spatial peak SAR value was evaluated under the following procedure:

(1). The data at the surface were extrapolated, since the center of the dipoles is 1 mm(EX3DV4) away from the tip of the probe and the distance between the surface and the lowest measuring point is 1.3 mm. The extrapolation was based on a least square algorithm [4]. A polynomial of the fourth order was calculated through the points in z-axes.
This polynomial was then used to evaluate the points between the surface and the probe tip.

(2). The maximum interpolated value was searched with a straightforward algorithm. Around this maximum the SAR values averaged over the spatial volumes (1 g or 10 g) were computed by the 3D-Spline interpolation algorithm. The 3D-Spline is composed of three one-dimensional splines with the “Not a knot"-condition (in x, y and z-directions). The volume was integrated with the trapezoidal-algorithm. One thousand points (10 x 10 x 10) were interpolated to calculate the average.

(3). All neighboring volumes were evaluated until no neighboring volume with a higher average value was found.

***1. Ratio step method parameters used;**
The first measurement point: 2 mm from the phantom surface, the initial grid separation: 2 mm, subsequent graded grid ratio: 1.5
These parameters comply with the requirement of the KDB 865664 D01.

Step 4: Re-measurement of the E-field at the same location as in Step 1.
Confirmation after SAR testing
It was checked that the power drift [W] is within +/-5 %.The verification of power drift during the SAR test is that DASY5 system calculates the power drift by measuring the e-filed at the same location at beginning and the end of the scan measurement for each test position.

DASY5 system calculation Power drift value[dB] =20log(Ea)/(Eb)
Before SAR testing : Eb [V/m]
After SAR testing : Ea [V/m]

Limit of power drift[W] = +/- 5 %
X[dB] = 10log[P] = 10log(1.05/1) = 10log(1.05) -10log(1) = 0.212 dB

from E-filed relations with power.
$p=E^2/\eta$
Therefore, The correlation of power and the E-filed
X dB = 10log(P) = 10log(E)^2 = 20log(E)

Therefore,
The calculated power drift of DASY5 System must be the less than +/- 0.212 dB.

Measurement data

Plot No. 1

WLAN 2.4 GHz 2/Top 11b 2437MHz
Communication System: UID 0, #WLAN 11a/b/g/n (0); Communication System Band: 11b/g/n (2.4G); ; Duty Cycle: 1:1
Medium parameters used (interpolated): f = 2437 MHz; σ = 1.786 S/m; ε_r = 39.306; ρ = 1000 kg/m^3
Phantom section: Flat Section
DASY5 Configuration
Probe: EX3DV4 - SN3922; ConvF(7.83, 7.83, 7.83) @ 2437 MHz;
Sensor-Surface: 1.4 mm (Mechanical Surface Detection (Locations From Previous Scan Used)), Sensor-Surface: 1.4 mm (Mechanical Surface Detection)
Electronics: DAE4 Sn1372;
Phantom: ELI v5.0 (20deg probe tilt); Type: QDOVA001BB;Serial: TP:1203
Measurement SW: DASY52, Version 52.10 (4);SEMCAD X Version 14.6.14 (7501)

WLAN 2.4 GHz 2/Top 11b 2437 MHz/Area Scan (51x51x1): Interpolated grid: dx=1.200 mm, dy=1.200 mm

Info: Interpolated medium parameters used for SAR evaluation.
Maximum value of SAR (interpolated) = 0.637 W/kg

WLAN 2.4 GHz 2/Top 11b 2437 MHz/Zoom Scan (7x7x7)/Cube 0: Measurement grid: dx = 5 mm, dy = 5 mm, dz = 5 mm
Reference Value = 19.65 V/m; Power Drift = -0.03 dB
Peak SAR (extrapolated) = 0.808 W/kg
SAR(1 g) = 0.384 W/kg; SAR(10 g) = 0.175 W/kg
Smallest distance from peaks to all points 3 dB below = 8.1 mm
Ratio of SAR at M2 to SAR at M1 = 49.7 %

Info: Interpolated medium parameters used for SAR evaluation.
Maximum value of SAR (measured) = 0.637 W/kg

Ambient Temp. : 24.0 degree.C. Liquid Temp.; 23.5 degree.C.
Liquid temp. is kept within the 2 degree.C. during the test.
Date: 2022/01/05

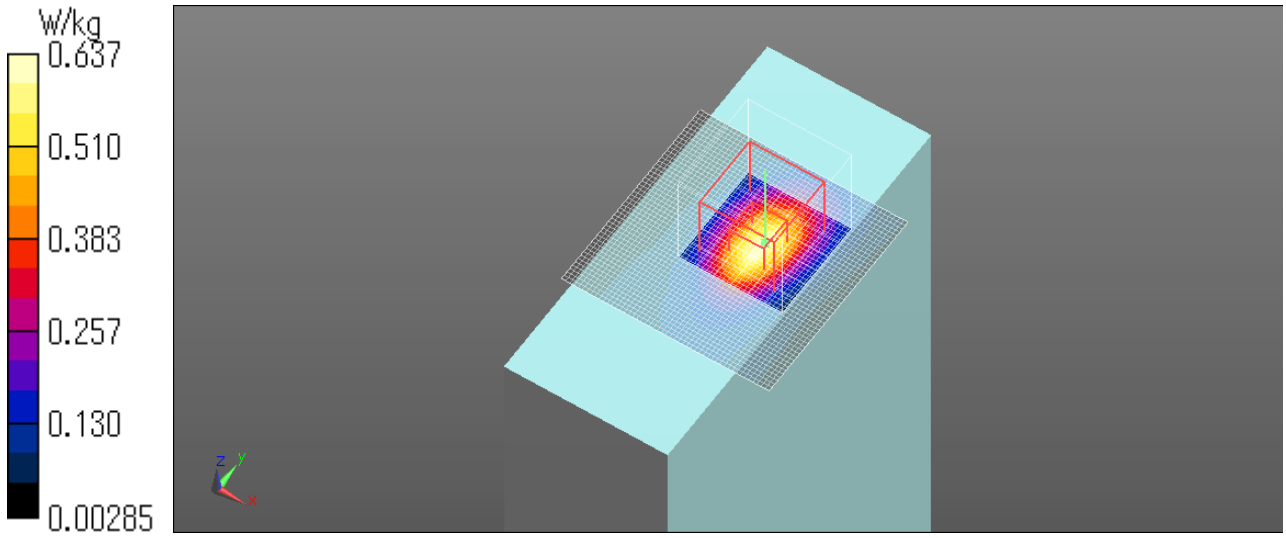

Plot No. 2

WLAN 5.3 GHz/Top 11a 5300MHz
Communication System: UID 0, #WLAN 11a/b/g/n (0); Communication System Band: 11a/n (W52 53); ; Duty Cycle: 1:1
Medium parameters used: f = 5300 MHz; σ = 4.84 S/m; ε_r = 36.43; ρ = 1000 kg/m^3
Phantom section: Flat Section
DASY5 Configuration
Probe: EX3DV4 - SN3922; ConvF(5.54, 5.54, 5.54) @ 5300 MHz;
Sensor-Surface: 1.4 mm (Mechanical Surface Detection)
Electronics: DAE4 Sn1372;
Phantom: ELI v5.0 (20deg probe tilt); Type: QDOVA001BB;Serial: TP:1203
Measurement SW: DASY52, Version 52.10 (4);SEMCAD X Version 14.6.14 (7501)

WLAN 5.3 GHz 2/Top 11a 5300 MHz/Area Scan (61x61x1): Interpolated grid: dx = 1.000 mm, dy = 1.000 mm
Maximum value of SAR (interpolated) = 0.861 W/kg

WLAN 5.3 GHz 2/Top 11a 5300 MHz/Zoom Scan (8x8x8)/Cube 0: Measurement grid: dx = 4 mm, dy = 4 mm, dz = 1.4 mm
Reference Value = 14.90 V/m; Power Drift = -0.05 dB
Peak SAR (extrapolated) = 1.44 W/kg
SAR(1 g) = 0.397 W/kg; SAR(10 g) = 0.149 W/kg
Smallest distance from peaks to all points 3 dB below = 9.4 mm
Ratio of SAR at M2 to SAR at M1 = 64.4 %
Maximum value of SAR (measured) = 0.905 W/kg

Ambient Temp. : 22.0 degree.C. Liquid Temp.; 21.5 degree.C.
Liquid temp. is kept within the 2 degree.C. during the test.
Date: 2022/01/11

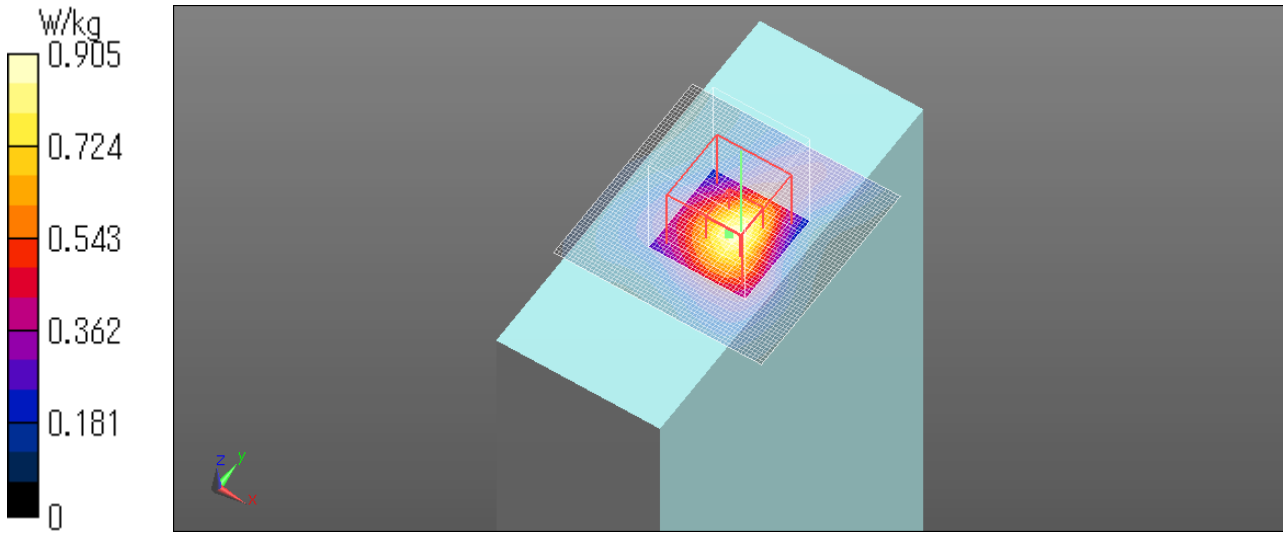

Plot No. 3

WLAN 5.5 GHz/Top 11n40 5670MHz
Communication System: UID 0, #WLAN 11a/b/g/n (0); Communication System Band: 11a/n (W56); ; Duty Cycle: 1:1
Medium parameters used: f = 5670 MHz; σ = 5.175 S/m; ε_r = 35.796; ρ = 1000 kg/m^3
Phantom section: Flat Section
DASY5 Configuration
Probe: EX3DV4 - SN3922; ConvF(4.61, 4.61, 4.61) @ 5670 MHz;
Sensor-Surface: 1. 4mm (Mechanical Surface Detection)
Electronics: DAE4 Sn1372;
Phantom: ELI v5.0 (20deg probe tilt); Type: QDOVA001BB;Serial: TP:1203
Measurement SW: DASY52, Version 52.10 (4);SEMCAD X Version 14.6.14 (7501)

WLAN 5.5 GHz 2/Top 11n40 5670 MHz/Area Scan (61x61x1): Interpolated grid: dx = 1.000 mm, dy = 1.000 mm
Maximum value of SAR (interpolated) = 1.16 W/kg

WLAN 5.5 GHz 2/Top 11n40 5670 MHz/Zoom Scan (8x8x8)/Cube 0: Measurement grid: dx = 4 mm, dy = 4 mm, dz = 1.4 mm
Reference Value = 16.86 V/m; Power Drift = -0.03 dB
Peak SAR (extrapolated) = 2.02 W/kg
SAR(1 g) = 0.515 W/kg; SAR(10 g) = 0.192 W/kg
Smallest distance from peaks to all points 3 dB below = 9.4 mm
Ratio of SAR at M2 to SAR at M1 = 61.5 %
Maximum value of SAR (measured) = 1.19 W/kg

Ambient Temp. : 22.0 degree.C. Liquid Temp.; 21.5 degree.C.
Liquid temp. is kept within the 2 degree.C. during the test.
Date: 2022/01/13

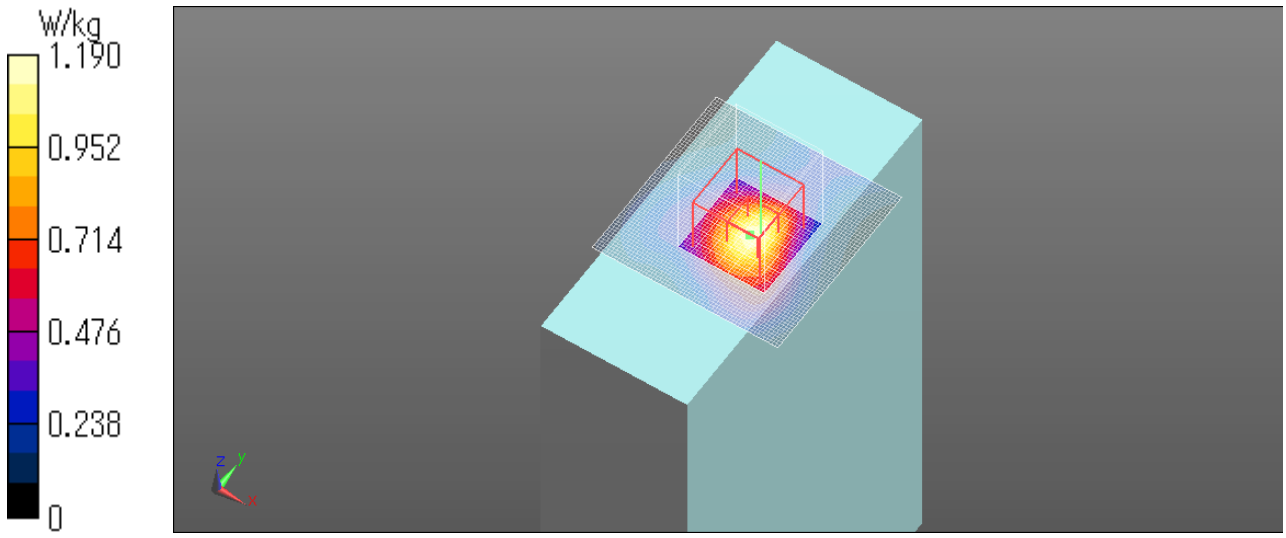

Plot No. 4

WLAN/Top 11n40 5795MHz
Communication System: UID 0, #WLAN 11a/b/g/n (0); Communication System Band: 11a/n (W58); ; Duty Cycle: 1:1
Medium parameters used: f = 5795 MHz; σ = 5.303 S/m; ε_r = 35.651; ρ = 1000 kg/m^3
Phantom section: Flat Section
DASY5 Configuration
Probe: EX3DV4 - SN3922; ConvF(4.82, 4.82, 4.82) @ 5795 MHz;
Sensor-Surface: 1.4 mm (Mechanical Surface Detection)
Electronics: DAE4 Sn1372;
Phantom: ELI v5.0 (20deg probe tilt); Type: QDOVA001BB;Serial: TP:1203
Measurement SW: DASY52, Version 52.10 (4);SEMCAD X Version 14.6.14 (7501)

WLAN/Top 11n40 5795 MHz/Area Scan (61x61x1): Interpolated grid: dx = 1.000 mm, dy = 1.000 mm
Maximum value of SAR (interpolated) = 1.32 W/kg

WLAN/Top 11n40 5795 MHz/Zoom Scan (8x8x7)/Cube 0: Measurement grid: dx = 4 mm, dy = 4 mm, dz = 1.4 mm
Reference Value = 17.66 V/m; Power Drift = -0.10 dB
Peak SAR (extrapolated) = 2.29 W/kg
SAR(1 g) = 0.575 W/kg; SAR(10 g) = 0.210 W/kg
Smallest distance from peaks to all points 3 dB below = 8.8 mm
Ratio of SAR at M2 to SAR at M1 = 61.2 %
Maximum value of SAR (measured) = 1.33 W/kg

Ambient Temp. : 22.0 degree.C. Liquid Temp.; 21.5 degree.C.
Liquid temp. is kept within the 2 degree.C. during the test.
Date: 2022/01/18

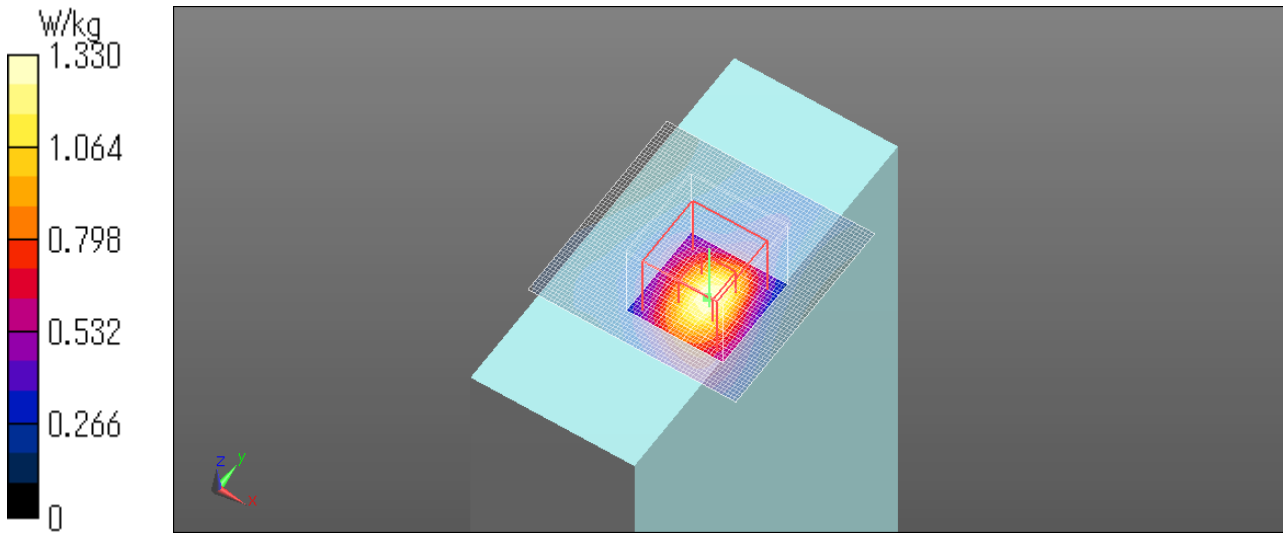

APPENDIX 3 : System specifications

Configuration and peripherals

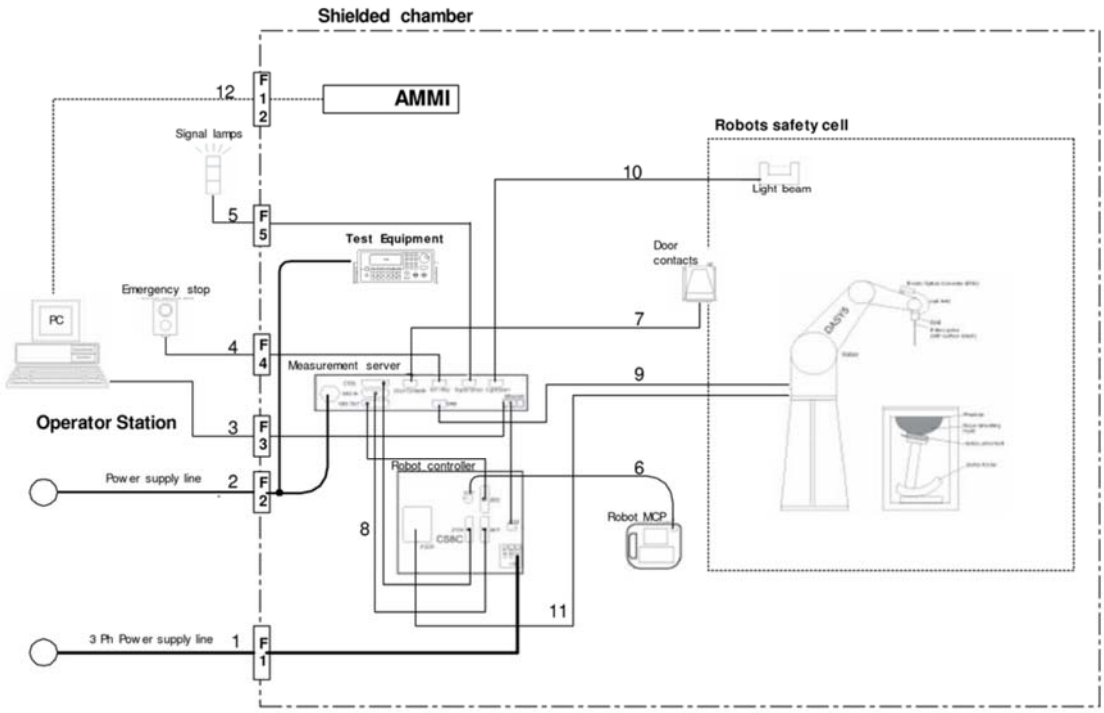

The DASY5 system for performing compliance tests consist of the following items:
Our system is DASY6; however, it behaves as DASY5.

a) A standard high precision 6-axis robot (Stäubli RX family) with controller and software.
An arm extension for accommodating the data acquisition electronics (DAE).

b) An isotropic field probe optimized and calibrated for the targeted measurement.

c) A data acquisition electronic (DAE), which performs the signal amplification, signal multiplexing, AD-conversion, offset measurements, mechanical surface detection, collision detection, etc. The unit is battery powered with standard or rechargeable batteries. The signal is optically transmitted to the EOC.

d) The Electro-optical converter (EOC) performs the conversion between optical and electrical of the signals for the digital communication to the DAE and for the analog signal from the optical surface detection.
The EOC is connected to the measurement server.

e) The function of the measurement server is to perform the time critical tasks such as signal filtering, control of the robot operation and fast movement interrupts.

f) The Light Beam used is for probe alignment. This improves the (absolute) accuracy of the probe positioning.

g) A computer running Windows 10 or 7 and the DASY5/6 software.

h) Remote control with teaches pendant and additional circuitry for robot safety such as warning lamps, etc.

i) The phantom, the device holder and other accessories according to the targeted measurement.

Specifications

a)Robot TX60L

Number of Axes	:	6
Nominal Load	:	2 kg
Maximum Load	:	5 kg
Reach	:	920 mm
Repeatability	:	+/-0.03 mm
Control Unit	:	CS8c
Programming Language	:	VAL3
Weight	:	52.2 kg
Manufacture	:	Stäubli Robotics

b)E-Field Probe

Model	:	EX3DV4
Construction	:	Symmetrical design with triangular core Built-in shielding against static charges PEEK enclosure material (resistant to organic solvents, e.g., glycol ether)
Frequency	:	10 MHz to > 6 GHz Linearity: ± 0.2 dB (30 MHz to 6 GHz)
Directivity	:	+/-0.3 dB in HSL (rotation around probe axis) +/-0.5 dB in tissue material (rotation normal probe axis)
Dynamic Range	:	10uW/g to > 100 mW/g;Linearity +/-0.2 dB(noise: typically < 1uW/g)
Dimensions	:	Overall length: 337 mm (Tip: 20 mm) Tip diameter: 2.5 mm (Body: 12 mm) Typical distance from probe tip to dipole centers: 1 mm
Application	:	Highprecision dosimetric measurement in any exposure scenario (e.g., very strong gradient fields).Only probe which enables compliance testing for frequencies up to 6 GHz with precision of better 30 %.
Manufacture	:	Schmid & Partner Engineering AG

EX3DV4 E-field Probe

c)Data Acquisition Electronic (DAE4)

Features	:	Signal amplifier, multiplexer, A/D converter and control logic Serial optical link for communication with DASY5 embedded system (fully remote controlled) Two step probe touch detector for mechanical surface detection and emergency robot stop
Measurement Range	:	-100 to +300 mV (16 bit resolution and two range settings: 4 mV, 400 mV)
Input Offset voltage	:	< 5 µV (with auto zero)
Input Resistance	:	200 MΩ
Input Bias Current	:	< 50 fA
Battery Power	:	> 10 h of operation (with two 9.6 V NiMH accus)
Dimension	:	60 x 60 x 68 mm
Manufacture	:	Schmid & Partner Engineering AG

d)Electro-Optic Converter (EOC)

Version	:	EOC 61
Description	:	for TX60 robot arm, including proximity sensor
Manufacture	:	Schmid & Partner Engineering AG

e)DASY5 Measurement server

Features	:	Intel ULV Celeron 400 MHz 128 MB chip disk and 128 MB RAM 16 Bit A/D converter for surface detection system Vacuum Fluorescent Display Robot Interface Serial link to DAE (with watchdog supervision) Door contact port (Possibility to connect a light curtain) Emergency stop port (to connect the remote control) Signal lamps port Light beam port Three Ethernet connection ports Two USB 2.0 Ports Two serial links Expansion port for future applications
Dimensions (L x W x H)	:	440 x 241 x 89 mm
Manufacture	:	Schmid & Partner Engineering AG

f) Light Beam Switches

Version	:	LB5
Dimensions (L x H)	:	110 x 80 mm
Thickness	:	12 mm
Beam-length	:	80 mm
Manufacture	:	Schmid & Partner Engineering AG

g)Software

Item	:	Dosimetric Assessment System DASY5
Type No.	:	SD 000 401A, SD 000 402A
Software version No.	:	DASY52, Version 52.6 (1)
Manufacture / Origin	:	Schmid & Partner Engineering AG

h)Robot Control Unit

Weight	:	70 Kg
AC Input Voltage	:	selectable
Manufacturer	:	Stäubli Robotics

i)Phantom and Device Holder

Phantom

Type	:	SAM Twin Phantom V4.0
Description	:	The shell corresponds to the specifications of the Specific Anthropomorphic Mannequin (SAM) phantom defined in IEEE 1528 and IEC 62209-1. It enables the dosimetric evaluation of left and right hand phone usage as well as body mounted usage at the flat phantom region. A cover prevents evaporation of the liquid. Reference markings on the phantom allow the complete setup of all predefined phantom positions and measurement grids by teaching three points with the robot.
Material	:	Vinylester, glass fiber reinforced (VE-GF)
Shell Material	:	Fiberglass
Thickness	:	2.0 +/- 0.2 mm
Dimensions	:	Length: 1000 mm Width: 500 mm Height: adjustable feet
Volume	:	Approx. 25 liters
Manufacture	:	Schmid & Partner Engineering AG

Type	:	2 mm Flat phantom ELI4.0 or 5
Description	:	Phantom for compliance testing of handheld and body-mounted wireless devices in the frequency range of 30 MHz to 6 GHz. ELI4 is fully compatible with the latest draft of the standard IEC 62209 Part II and all known tissue simulating liquids. ELI4 has been optimized regarding its performance and can be integrated into our standard phantom tables. A cover prevents evaporation of the liquid. Reference markings on the phantom allow installation of the complete setup, including all predefined phantom positions and measurement grids, by teaching three points. The phantom is supported by software version DASY4.5 and higher and is compatible with all SPEAG dosimetric probes and dipoles.
Material	:	Vinylester, glass fiber reinforced (VE-GF)
Shell Thickness	:	2.0 ± 0.2 mm (sagging: < 1 %)
Filling Volume	:	approx. 30 liters
Dimensions	:	Major ellipse axis: 600 mm Minor axis: 400 mm
Manufacture	:	Schmid & Partner Engineering AG

Device Holder

In combination with the Twin SAM Phantom V4.0/V4.0c or ELI4, the Mounting Device enables the rotation of the mounted transmitter device in spherical coordinates. Rotation point is the ear opening point. Transmitter devices can be easily and accurately positioned according to IEC, IEEE, FCC or other specifications. The device holder can be locked for positioning at different phantom sections (left head, right head, flat).

Material : POM

Laptio Extensions kit

Simple but effective and easy-to-use extension for Mounting Device that facilitates the testing of larger devices according to IEC 62209-2 (e.g., laptops, cameras, etc.). It is lightweight and fits easily on the upper part of the Mounting Device in place of the phone positioner. The extension is fully compatible with the Twin-SAM, ELI4 Phantoms.

Material : POM, Acrylic glass, Foam

Urethane

For this measurement, the urethane foam was used as device holder.

j)Simulated Tissues (Liquid)

The following tissue formulations are provided for reference only as some of the parameters have not been thoroughly verified. The composition of ingredients may be modified accordingly to achieve the desired target tissue parameters required for required for routine SAR evaluation.

Product identifier

Trade name	Broad Band Tissue Simulation Liquid HBBL600-10000V6, MBBL600-6000V6, HU16B, MU16B
Manufacturer/Supplier	Schmid & Partner Engineering AG

Declarable components:

CAS: 107-21-1 EINECS: 203-473-3 Reg.nr.: 01-2119456816-28-0000	**Ethanediol** STOT RE 2, H373; Acute Tox. 4, H302	< 5.2%
CAS: 68608-26-4 EINECS: 271-781-5 Reg.nr.: 01-2119527859-22-0000	**Sodium petroleum sulfonate** Eye Irrit. 2, H319	< 2.9%
CAS: 107-41-5 EINECS: 203-489-0 Reg.nr.: 01-2119539582-35-0000	**Hexylene Glycol / 2-Methyl-pentane-2,4-diol** Skin Irrit. 2, H315; Eye Irrit. 2, H319	< 2.9%
CAS: 68920-66-1 NLP: 500-236-9 Reg.nr.: 01-2119489407-26-0000	**Alkoxylated alcohol, > C_{16}** Aquatic Chronic 2, H411; Skin Irrit. 2, H315; Eye Irrit. 2, H319	< 2.0%

Dosimetric E-Field Probe Calibration Certificate (EX3DV4, S/N: 3922)

Calibration Laboratory of
Schmid & Partner
Engineering AG
Zeughausstrasse 43, 8004 Zurich, Switzerland

S Schweizerischer Kalibrierdienst
C Service suisse d'étalonnage
S Servizio svizzero di taratura
Swiss Calibration Service

Accredited by the Swiss Accreditation Service (SAS)
The Swiss Accreditation Service is one of the signatories to the EA Multilateral Agreement for the recognition of calibration certificates

Accreditation No.: SCS 0108

Client UL Japan (RCC)

Certificate No: EX3-3922_Aug21

CALIBRATION CERTIFICATE

Object	EX3DV4 - SN:3922
Calibration procedure(s)	QA CAL-01.v9, QA CAL-12.v9, QA CAL-14.v6, QA CAL-23.v5, QA CAL-25.v7 Calibration procedure for dosimetric E-field probes
Calibration date:	August 16, 2021

This calibration certificate documents the traceability to national standards, which realize the physical units of measurements (SI).
The measurements and the uncertainties with confidence probability are given on the following pages and are part of the certificate.

All calibrations have been conducted in the closed laboratory facility: environment temperature (22 ± 3)°C and humidity < 70%.

Calibration Equipment used (M&TE critical for calibration)

Primary Standards	ID	Cal Date (Certificate No.)	Scheduled Calibration
Power meter NRP	SN: 104778	09-Apr-21 (No. 217-03291/03292)	Apr-22
Power sensor NRP-Z91	SN: 103244	09-Apr-21 (No. 217-03291)	Apr-22
Power sensor NRP-Z91	SN: 103245	09-Apr-21 (No. 217-03292)	Apr-22
Reference 20 dB Attenuator	SN: CC2552 (20x)	09-Apr-21 (No. 217-03343)	Apr-22
DAE4	SN: 660	23-Dec-20 (No. DAE4-660_Dec20)	Dec-21
Reference Probe ES3DV2	SN: 3013	30-Dec-20 (No. ES3-3013_Dec20)	Dec-21
Secondary Standards	**ID**	**Check Date (in house)**	**Scheduled Check**
Power meter E4419B	SN: GB41293874	06-Apr-16 (in house check Jun-20)	In house check: Jun-22
Power sensor E4412A	SN: MY41498087	06-Apr-16 (in house check Jun-20)	In house check: Jun-22
Power sensor E4412A	SN: 000110210	06-Apr-16 (in house check Jun-20)	In house check: Jun-22
RF generator HP 8648C	SN: US3642U01700	04-Aug-99 (in house check Jun-20)	In house check: Jun-22
Network Analyzer E8358A	SN: US41080477	31-Mar-14 (in house check Oct-20)	In house check: Oct-21

	Name	Function	Signature
Calibrated by:	Michael Weber	Laboratory Technician	i.V.
Approved by:	Katja Pokovic	Technical Manager	

Issued: August 17, 2021

This calibration certificate shall not be reproduced except in full without written approval of the laboratory.

Certificate No: EX3-3922_Aug21 Page 1 of 23

Calibration Laboratory of
Schmid & Partner
Engineering AG
Zeughausstrasse 43, 8004 Zurich, Switzerland

S Schweizerischer Kalibrierdienst
C Service suisse d'étalonnage
S Servizio svizzero di taratura
Swiss Calibration Service

Accredited by the Swiss Accreditation Service (SAS)
The Swiss Accreditation Service is one of the signatories to the EA Multilateral Agreement for the recognition of calibration certificates

Accreditation No.: SCS 0108

Glossary:

TSL	tissue simulating liquid
NORMx,y,z	sensitivity in free space
ConvF	sensitivity in TSL / NORMx,y,z
DCP	diode compression point
CF	crest factor (1/duty_cycle) of the RF signal
A, B, C, D	modulation dependent linearization parameters
Polarization φ	φ rotation around probe axis
Polarization ϑ	ϑ rotation around an axis that is in the plane normal to probe axis (at measurement center), i.e., ϑ = 0 is normal to probe axis
Connector Angle	information used in DASY system to align probe sensor X to the robot coordinate system

Calibration is Performed According to the Following Standards:

a) IEC/IEEE 62209-1528, "Measurement Procedure For The Assessment Of Specific Absorption Rate Of Human Exposure To Radio Frequency Fields From Hand-Held And Body-Worn Wireless Communication Devices - Part 1528: Human Models, Instrumentation And Procedures (Frequency Range of 4 MHz to 10 GHz)", October 2020.

b) KDB 865664, "SAR Measurement Requirements for 100 MHz to 6 GHz"

Methods Applied and Interpretation of Parameters:

- *NORMx,y,z:* Assessed for E-field polarization ϑ = 0 (f ≤ 900 MHz in TEM-cell; f > 1800 MHz: R22 waveguide). NORMx,y,z are only intermediate values, i.e., the uncertainties of NORMx,y,z does not affect the E^2-field uncertainty inside TSL (see below *ConvF*).
- *NORM(f)x,y,z = NORMx,y,z * frequency_response* (see Frequency Response Chart). This linearization is implemented in DASY4 software versions later than 4.2. The uncertainty of the frequency response is included in the stated uncertainty of *ConvF*.
- *DCPx,y,z:* DCP are numerical linearization parameters assessed based on the data of power sweep with CW signal (no uncertainty required). DCP does not depend on frequency nor media.
- *PAR:* PAR is the Peak to Average Ratio that is not calibrated but determined based on the signal characteristics
- *Ax,y,z; Bx,y,z; Cx,y,z; Dx,y,z; VRx,y,z: A, B, C, D* are numerical linearization parameters assessed based on the data of power sweep for specific modulation signal. The parameters do not depend on frequency nor media. *VR* is the maximum calibration range expressed in RMS voltage across the diode.
- *ConvF and Boundary Effect Parameters:* Assessed in flat phantom using E-field (or Temperature Transfer Standard for f ≤ 800 MHz) and inside waveguide using analytical field distributions based on power measurements for f > 800 MHz. The same setups are used for assessment of the parameters applied for boundary compensation (alpha, depth) of which typical uncertainty values are given. These parameters are used in DASY4 software to improve probe accuracy close to the boundary. The sensitivity in TSL corresponds to *NORMx,y,z * ConvF* whereby the uncertainty corresponds to that given for *ConvF*. A frequency dependent *ConvF* is used in DASY version 4.4 and higher which allows extending the validity from ± 50 MHz to ± 100 MHz.
- *Spherical isotropy (3D deviation from isotropy)*: in a field of low gradients realized using a flat phantom exposed by a patch antenna.
- *Sensor Offset*: The sensor offset corresponds to the offset of virtual measurement center from the probe tip (on probe axis). No tolerance required.
- *Connector Angle*: The angle is assessed using the information gained by determining the *NORMx* (no uncertainty required).

DASY/EASY - Parameters of Probe: EX3DV4 - SN:3922

Basic Calibration Parameters

	Sensor X	Sensor Y	Sensor Z	Unc (k=2)
Norm ($\mu V/(V/m)^2$)[A]	0.65	0.56	0.59	± 10.1 %
DCP (mV)[B]	99.5	102.8	99.6	

Calibration Results for Modulation Response

UID	Communication System Name		A dB	B dB√µV	C	D dB	VR mV	Max dev.	Max Unc[E] (k=2)
0	CW	X	0.00	0.00	1.00	0.00	149.5	± 2.7 %	± 4.7 %
		Y	0.00	0.00	1.00		137.1		
		Z	0.00	0.00	1.00		151.1		
10352-AAA	Pulse Waveform (200Hz, 10%)	X	20.00	94.30	22.97	10.00	60.0	± 3.8 %	± 9.6 %
		Y	20.00	95.26	23.01		60.0		
		Z	20.00	94.14	22.87		60.0		
10353-AAA	Pulse Waveform (200Hz, 20%)	X	20.00	94.25	22.08	6.99	80.0	± 2.0 %	± 9.6 %
		Y	20.00	101.80	25.25		80.0		
		Z	20.00	95.26	22.60		80.0		
10354-AAA	Pulse Waveform (200Hz, 40%)	X	20.00	98.97	23.27	3.98	95.0	± 1.2 %	± 9.6 %
		Y	20.00	114.94	30.08		95.0		
		Z	20.00	100.85	24.21		95.0		
10355-AAA	Pulse Waveform (200Hz, 60%)	X	20.00	107.86	26.33	2.22	120.0	± 1.0 %	± 9.6 %
		Y	20.00	118.09	30.05		120.0		
		Z	20.00	110.74	27.69		120.0		
10387-AAA	QPSK Waveform, 1 MHz	X	1.95	68.15	16.55	1.00	150.0	± 2.0 %	± 9.6 %
		Y	1.74	67.47	15.58		150.0		
		Z	1.93	67.69	16.38		150.0		
10388-AAA	QPSK Waveform, 10 MHz	X	2.65	70.67	17.32	0.00	150.0	± 1.0 %	± 9.6 %
		Y	2.30	68.78	16.22		150.0		
		Z	2.62	70.36	17.16		150.0		
10396-AAA	64-QAM Waveform, 100 kHz	X	3.35	72.81	20.26	3.01	150.0	± 0.7 %	± 9.6 %
		Y	2.56	68.98	18.37		150.0		
		Z	3.53	73.46	20.56		150.0		
10399-AAA	64-QAM Waveform, 40 MHz	X	3.64	67.70	16.28	0.00	150.0	± 0.9 %	± 9.6 %
		Y	3.44	66.95	15.75		150.0		
		Z	3.75	68.13	16.47		150.0		
10414-AAA	WLAN CCDF, 64-QAM, 40MHz	X	4.93	65.73	15.71	0.00	150.0	± 2.0 %	± 9.6 %
		Y	4.74	65.52	15.48		150.0		
		Z	4.91	65.56	15.61		150.0		

Note: For details on UID parameters see Appendix

The reported uncertainty of measurement is stated as the standard uncertainty of measurement multiplied by the coverage factor k=2, which for a normal distribution corresponds to a coverage probability of approximately 95%.

[A] The uncertainties of Norm X,Y,Z do not affect the E^2-field uncertainty inside TSL (see Pages 5 and 6).
[B] Numerical linearization parameter: uncertainty not required.
[E] Uncertainty is determined using the max. deviation from linear response applying rectangular distribution and is expressed for the square of the field value.

DASY/EASY - Parameters of Probe: EX3DV4 - SN:3922

Sensor Model Parameters

	C1 fF	C2 fF	α V^{-1}	T1 $ms.V^{-2}$	T2 $ms.V^{-1}$	T3 ms	T4 V^{-2}	T5 V^{-1}	T6
X	50.1	370.37	35.07	25.31	0.11	5.10	1.02	0.29	1.01
Y	39.3	288.58	34.56	12.83	0.07	5.10	0.50	0.23	1.01
Z	52.4	387.14	35.06	24.70	0.10	5.10	1.21	0.30	1.01

Other Probe Parameters

Sensor Arrangement	Triangular
Connector Angle (°)	-74.1
Mechanical Surface Detection Mode	enabled
Optical Surface Detection Mode	disabled
Probe Overall Length	337 mm
Probe Body Diameter	10 mm
Tip Length	9 mm
Tip Diameter	2.5 mm
Probe Tip to Sensor X Calibration Point	1 mm
Probe Tip to Sensor Y Calibration Point	1 mm
Probe Tip to Sensor Z Calibration Point	1 mm
Recommended Measurement Distance from Surface	1.4 mm

Note: Measurement distance from surface can be increased to 3-4 mm for an *Area Scan* job.

EX3DV4– SN:3922 August 16, 2021

DASY/EASY - Parameters of Probe: EX3DV4 - SN:3922

Calibration Parameter Determined in Head Tissue Simulating Media

f (MHz) [C]	Relative Permittivity [F]	Conductivity (S/m) [F]	ConvF X	ConvF Y	ConvF Z	Alpha [G]	Depth [G] (mm)	Unc (k=2)
450	43.5	0.87	11.12	11.12	11.12	0.16	1.30	± 13.3 %
600	42.7	0.88	10.31	10.31	10.31	0.10	1.30	± 13.3 %
900	41.5	0.97	9.86	9.86	9.86	0.52	0.80	± 12.0 %
2450	39.2	1.80	7.83	7.83	7.83	0.35	0.95	± 12.0 %
5250	35.9	4.71	5.54	5.54	5.54	0.40	1.80	± 13.1 %
5600	35.5	5.07	4.61	4.61	4.61	0.40	1.80	± 13.1 %
5800	35.3	5.27	4.82	4.82	4.82	0.40	1.80	± 13.1 %

[C] Frequency validity above 300 MHz of ± 100 MHz only applies for DASY v4.4 and higher (see Page 2), else it is restricted to ± 50 MHz. The uncertainty is the RSS of the ConvF uncertainty at calibration frequency and the uncertainty for the indicated frequency band. Frequency validity below 300 MHz is ± 10, 25, 40, 50 and 70 MHz for ConvF assessments at 30, 64, 128, 150 and 220 MHz respectively. Validity of ConvF assessed at 6 MHz is 4-9 MHz, and ConvF assessed at 13 MHz is 9-19 MHz. Above 5 GHz frequency validity can be extended to ± 110 MHz.
[F] At frequencies below 3 GHz, the validity of tissue parameters (ε and σ) can be relaxed to ± 10% if liquid compensation formula is applied to measured SAR values. At frequencies above 3 GHz, the validity of tissue parameters (ε and σ) is restricted to ± 5%. The uncertainty is the RSS of the ConvF uncertainty for indicated target tissue parameters.
[G] Alpha/Depth are determined during calibration. SPEAG warrants that the remaining deviation due to the boundary effect after compensation is always less than ± 1% for frequencies below 3 GHz and below ± 2% for frequencies between 3-6 GHz at any distance larger than half the probe tip diameter from the boundary.

EX3DV4– SN:3922

August 16, 2021

DASY/EASY - Parameters of Probe: EX3DV4 - SN:3922

Calibration Parameter Determined in Body Tissue Simulating Media

f (MHz) [C]	Relative Permittivity [F]	Conductivity (S/m) [F]	ConvF X	ConvF Y	ConvF Z	Alpha [G]	Depth [G] (mm)	Unc (k=2)
450	56.7	0.94	11.25	11.25	11.25	0.11	1.25	± 13.3 %
600	56.1	0.95	10.72	10.72	10.72	0.10	1.20	± 13.3 %
2450	52.7	1.95	7.73	7.73	7.73	0.33	0.95	± 12.0 %
5250	48.9	5.36	4.75	4.75	4.75	0.50	1.90	± 13.1 %
5600	48.5	5.77	4.08	4.08	4.08	0.50	1.90	± 13.1 %
5800	48.2	6.00	4.15	4.15	4.15	0.50	1.90	± 13.1 %

[C] Frequency validity above 300 MHz of ± 100 MHz only applies for DASY v4.4 and higher (see Page 2), else it is restricted to ± 50 MHz. The uncertainty is the RSS of the ConvF uncertainty at calibration frequency and the uncertainty for the indicated frequency band. Frequency validity below 300 MHz is ± 10, 25, 40, 50 and 70 MHz for ConvF assessments at 30, 64, 128, 150 and 220 MHz respectively. Validity of ConvF assessed at 6 MHz is 4-9 MHz, and ConvF assessed at 13 MHz is 9-19 MHz. Above 5 GHz frequency validity can be extended to ± 110 MHz.
[F] At frequencies below 3 GHz, the validity of tissue parameters (ε and σ) can be relaxed to ± 10% if liquid compensation formula is applied to measured SAR values. At frequencies above 3 GHz, the validity of tissue parameters (ε and σ) is restricted to ± 5%. The uncertainty is the RSS of the ConvF uncertainty for indicated target tissue parameters.
[G] Alpha/Depth are determined during calibration. SPEAG warrants that the remaining deviation due to the boundary effect after compensation is always less than ± 1% for frequencies below 3 GHz and below ± 2% for frequencies between 3-6 GHz at any distance larger than half the probe tip diameter from the boundary.

UL Japan, Inc.
Ise EMC Lab.
4383-326 Asama-cho, Ise-shi, Mie-ken 516-0021 JAPAN
Telephone: +81 596 24 8999
Facsimile: +81 596 24 8124

EX3DV4– SN:3922 August 16, 2021

Frequency Response of E-Field
(TEM-Cell:ifi110 EXX, Waveguide: R22)

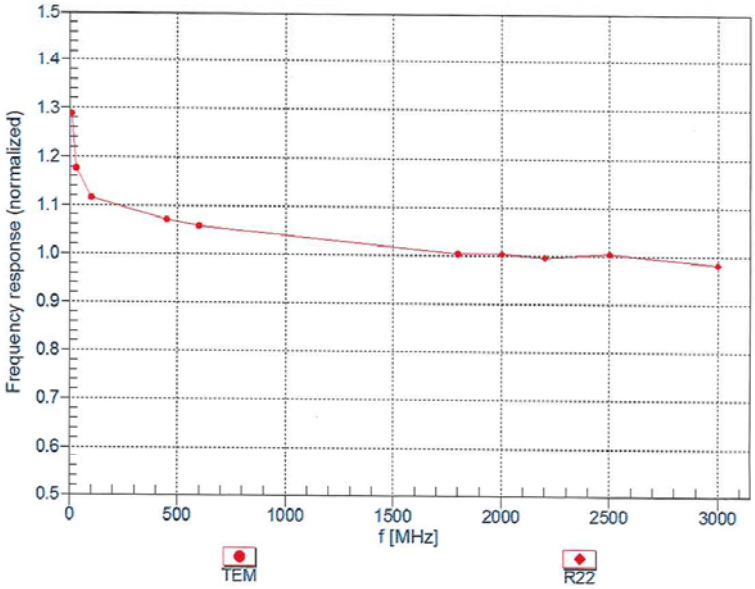

Uncertainty of Frequency Response of E-field: ± 6.3% (k=2)

UL Japan, Inc.
Ise EMC Lab.
4383-326 Asama-cho, Ise-shi, Mie-ken 516-0021 JAPAN
Telephone: +81 596 24 8999
Facsimile: +81 596 24 8124

EX3DV4– SN:3922 August 16, 2021

Receiving Pattern (ϕ), ϑ = 0°

f=600 MHz,TEM

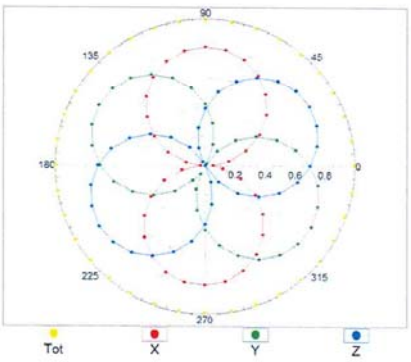

f=1800 MHz,R22

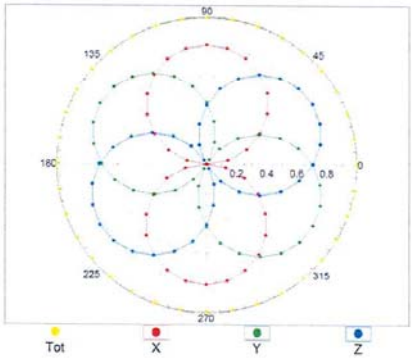

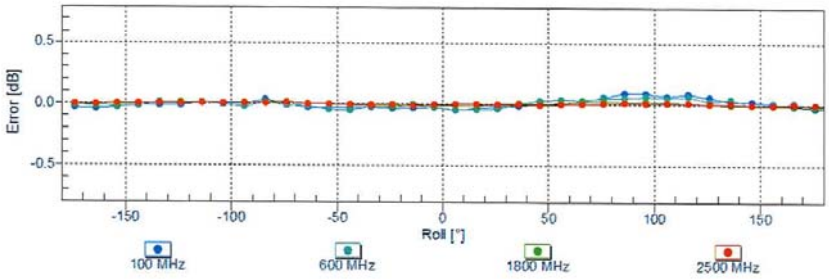

Uncertainty of Axial Isotropy Assessment: ± 0.5% (k=2)

EX3DV4– SN:3922

August 16, 2021

Dynamic Range f(SAR$_{head}$)
(TEM cell , f_{eval}= 1900 MHz)

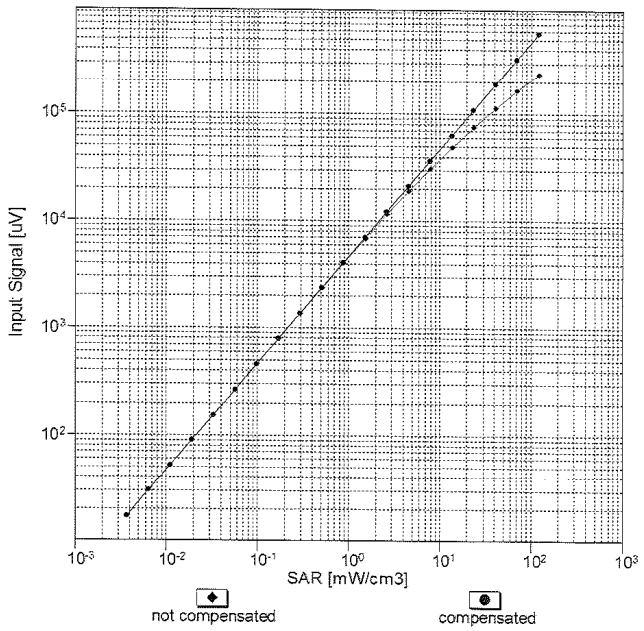

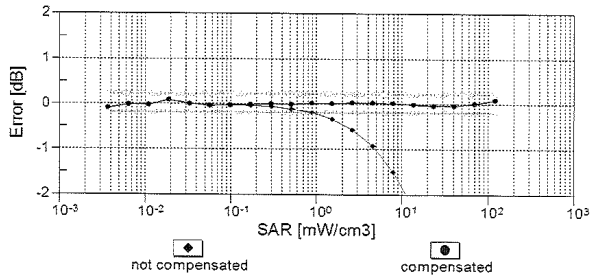

Uncertainty of Linearity Assessment: ± 0.6% (k=2)

UL Japan, Inc.
Ise EMC Lab.
4383-326 Asama-cho, Ise-shi, Mie-ken 516-0021 JAPAN
Telephone: +81 596 24 8999
Facsimile: +81 596 24 8124

EX3DV4– SN:3922 August 16, 2021

Conversion Factor Assessment

f = 900 MHz,WGLS R9 (H_convF)

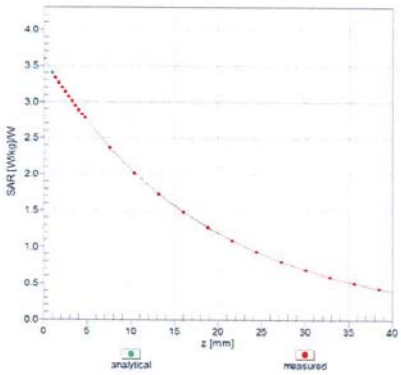

f = 2450 MHz,WGLS R22 (H_convF)

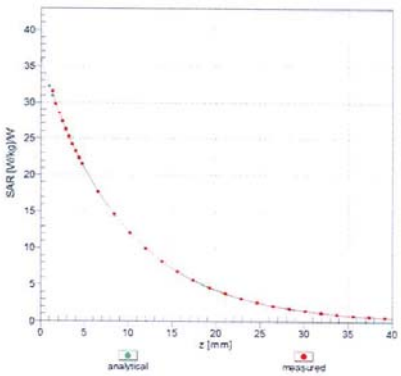

Deviation from Isotropy in Liquid

Error (ϕ, ϑ), f = 900 MHz

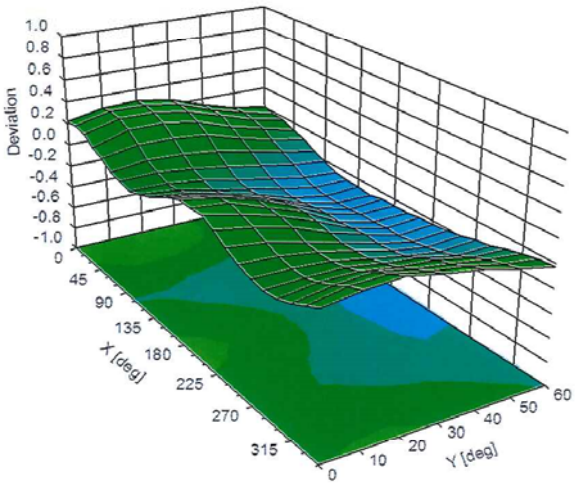

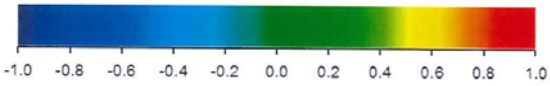

Uncertainty of Spherical Isotropy Assessment: ± 2.6% (k=2)

Certificate No: EX3-3922_Aug21 Page 10 of 23

EX3DV4– SN:3922 August 16, 2021

Appendix: Modulation Calibration Parameters

UID	Rev	Communication System Name	Group	PAR (dB)	Unc[E] (k=2)
0		CW	CW	0.00	± 4.7 %
10010	CAA	SAR Validation (Square, 100ms, 10ms)	Test	10.00	± 9.6 %
10011	CAB	UMTS-FDD (WCDMA)	WCDMA	2.91	± 9.6 %
10012	CAB	IEEE 802.11b WiFi 2.4 GHz (DSSS, 1 Mbps)	WLAN	1.87	± 9.6 %
10013	CAB	IEEE 802.11g WiFi 2.4 GHz (DSSS-OFDM, 6 Mbps)	WLAN	9.46	± 9.6 %
10021	DAC	GSM-FDD (TDMA, GMSK)	GSM	9.39	± 9.6 %
10023	DAC	GPRS-FDD (TDMA, GMSK, TN 0)	GSM	9.57	± 9.6 %
10024	DAC	GPRS-FDD (TDMA, GMSK, TN 0-1)	GSM	6.56	± 9.6 %
10025	DAC	EDGE-FDD (TDMA, 8PSK, TN 0)	GSM	12.62	± 9.6 %
10026	DAC	EDGE-FDD (TDMA, 8PSK, TN 0-1)	GSM	9.55	± 9.6 %
10027	DAC	GPRS-FDD (TDMA, GMSK, TN 0-1-2)	GSM	4.80	± 9.6 %
10028	DAC	GPRS-FDD (TDMA, GMSK, TN 0-1-2-3)	GSM	3.55	± 9.6 %
10029	DAC	EDGE-FDD (TDMA, 8PSK, TN 0-1-2)	GSM	7.78	± 9.6 %
10030	CAA	IEEE 802.15.1 Bluetooth (GFSK, DH1)	Bluetooth	5.30	± 9.6 %
10031	CAA	IEEE 802.15.1 Bluetooth (GFSK, DH3)	Bluetooth	1.87	± 9.6 %
10032	CAA	IEEE 802.15.1 Bluetooth (GFSK, DH5)	Bluetooth	1.16	± 9.6 %
10033	CAA	IEEE 802.15.1 Bluetooth (PI/4-DQPSK, DH1)	Bluetooth	7.74	± 9.6 %
10034	CAA	IEEE 802.15.1 Bluetooth (PI/4-DQPSK, DH3)	Bluetooth	4.53	± 9.6 %
10035	CAA	IEEE 802.15.1 Bluetooth (PI/4-DQPSK, DH5)	Bluetooth	3.83	± 9.6 %
10036	CAA	IEEE 802.15.1 Bluetooth (8-DPSK, DH1)	Bluetooth	8.01	± 9.6 %
10037	CAA	IEEE 802.15.1 Bluetooth (8-DPSK, DH3)	Bluetooth	4.77	± 9.6 %
10038	CAA	IEEE 802.15.1 Bluetooth (8-DPSK, DH5)	Bluetooth	4.10	± 9.6 %
10039	CAB	CDMA2000 (1xRTT, RC1)	CDMA2000	4.57	± 9.6 %
10042	CAB	IS-54 / IS-136 FDD (TDMA/FDM, PI/4-DQPSK, Halfrate)	AMPS	7.78	± 9.6 %
10044	CAA	IS-91/EIA/TIA-553 FDD (FDMA, FM)	AMPS	0.00	± 9.6 %
10048	CAA	DECT (TDD, TDMA/FDM, GFSK, Full Slot, 24)	DECT	13.80	± 9.6 %
10049	CAA	DECT (TDD, TDMA/FDM, GFSK, Double Slot, 12)	DECT	10.79	± 9.6 %
10056	CAA	UMTS-TDD (TD-SCDMA, 1.28 Mcps)	TD-SCDMA	11.01	± 9.6 %
10058	DAC	EDGE-FDD (TDMA, 8PSK, TN 0-1-2-3)	GSM	6.52	± 9.6 %
10059	CAB	IEEE 802.11b WiFi 2.4 GHz (DSSS, 2 Mbps)	WLAN	2.12	± 9.6 %
10060	CAB	IEEE 802.11b WiFi 2.4 GHz (DSSS, 5.5 Mbps)	WLAN	2.83	± 9.6 %
10061	CAB	IEEE 802.11b WiFi 2.4 GHz (DSSS, 11 Mbps)	WLAN	3.60	± 9.6 %
10062	CAD	IEEE 802.11a/h WiFi 5 GHz (OFDM, 6 Mbps)	WLAN	8.68	± 9.6 %
10063	CAD	IEEE 802.11a/h WiFi 5 GHz (OFDM, 9 Mbps)	WLAN	8.63	± 9.6 %
10064	CAD	IEEE 802.11a/h WiFi 5 GHz (OFDM, 12 Mbps)	WLAN	9.09	± 9.6 %
10065	CAD	IEEE 802.11a/h WiFi 5 GHz (OFDM, 18 Mbps)	WLAN	9.00	± 9.6 %
10066	CAD	IEEE 802.11a/h WiFi 5 GHz (OFDM, 24 Mbps)	WLAN	9.38	± 9.6 %
10067	CAD	IEEE 802.11a/h WiFi 5 GHz (OFDM, 36 Mbps)	WLAN	10.12	± 9.6 %
10068	CAD	IEEE 802.11a/h WiFi 5 GHz (OFDM, 48 Mbps)	WLAN	10.24	± 9.6 %
10069	CAD	IEEE 802.11a/h WiFi 5 GHz (OFDM, 54 Mbps)	WLAN	10.56	± 9.6 %
10071	CAB	IEEE 802.11g WiFi 2.4 GHz (DSSS/OFDM, 9 Mbps)	WLAN	9.83	± 9.6 %
10072	CAB	IEEE 802.11g WiFi 2.4 GHz (DSSS/OFDM, 12 Mbps)	WLAN	9.62	± 9.6 %
10073	CAB	IEEE 802.11g WiFi 2.4 GHz (DSSS/OFDM, 18 Mbps)	WLAN	9.94	± 9.6 %
10074	CAB	IEEE 802.11g WiFi 2.4 GHz (DSSS/OFDM, 24 Mbps)	WLAN	10.30	± 9.6 %
10075	CAB	IEEE 802.11g WiFi 2.4 GHz (DSSS/OFDM, 36 Mbps)	WLAN	10.77	± 9.6 %
10076	CAB	IEEE 802.11g WiFi 2.4 GHz (DSSS/OFDM, 48 Mbps)	WLAN	10.94	± 9.6 %
10077	CAB	IEEE 802.11g WiFi 2.4 GHz (DSSS/OFDM, 54 Mbps)	WLAN	11.00	± 9.6 %
10081	CAB	CDMA2000 (1xRTT, RC3)	CDMA2000	3.97	± 9.6 %
10082	CAB	IS-54 / IS-136 FDD (TDMA/FDM, PI/4-DQPSK, Fullrate)	AMPS	4.77	± 9.6 %
10090	DAC	GPRS-FDD (TDMA, GMSK, TN 0-4)	GSM	6.56	± 9.6 %
10097	CAC	UMTS-FDD (HSDPA)	WCDMA	3.98	± 9.6 %
10098	DAC	UMTS-FDD (HSUPA, Subtest 2)	WCDMA	3.98	± 9.6 %

UL Japan, Inc.
Ise EMC Lab.
4383-326 Asama-cho, Ise-shi, Mie-ken 516-0021 JAPAN
Telephone: +81 596 24 8999
Facsimile: +81 596 24 8124

EX3DV4– SN:3922

August 16, 2021

10099	CAC	EDGE-FDD (TDMA, 8PSK, TN 0-4)	GSM	9.55	± 9.6 %
10100	CAC	LTE-FDD (SC-FDMA, 100% RB, 20 MHz, QPSK)	LTE-FDD	5.67	± 9.6 %
10101	CAB	LTE-FDD (SC-FDMA, 100% RB, 20 MHz, 16-QAM)	LTE-FDD	6.42	± 9.6 %
10102	CAB	LTE-FDD (SC-FDMA, 100% RB, 20 MHz, 64-QAM)	LTE-FDD	6.60	± 9.6 %
10103	DAC	LTE-TDD (SC-FDMA, 100% RB, 20 MHz, QPSK)	LTE-TDD	9.29	± 9.6 %
10104	CAE	LTE-TDD (SC-FDMA, 100% RB, 20 MHz, 16-QAM)	LTE-TDD	9.97	± 9.6 %
10105	CAE	LTE-TDD (SC-FDMA, 100% RB, 20 MHz, 64-QAM)	LTE-TDD	10.01	± 9.6 %
10108	CAE	LTE-FDD (SC-FDMA, 100% RB, 10 MHz, QPSK)	LTE-FDD	5.80	± 9.6 %
10109	CAG	LTE-FDD (SC-FDMA, 100% RB, 10 MHz, 16-QAM)	LTE-FDD	6.43	± 9.6 %
10110	CAG	LTE-FDD (SC-FDMA, 100% RB, 5 MHz, QPSK)	LTE-FDD	5.75	± 9.6 %
10111	CAG	LTE-FDD (SC-FDMA, 100% RB, 5 MHz, 16-QAM)	LTE-FDD	6.44	± 9.6 %
10112	CAG	LTE-FDD (SC-FDMA, 100% RB, 10 MHz, 64-QAM)	LTE-FDD	6.59	± 9.6 %
10113	CAG	LTE-FDD (SC-FDMA, 100% RB, 5 MHz, 64-QAM)	LTE-FDD	6.62	± 9.6 %
10114	CAG	IEEE 802.11n (HT Greenfield, 13.5 Mbps, BPSK)	WLAN	8.10	± 9.6 %
10115	CAG	IEEE 802.11n (HT Greenfield, 81 Mbps, 16-QAM)	WLAN	8.46	± 9.6 %
10116	CAG	IEEE 802.11n (HT Greenfield, 135 Mbps, 64-QAM)	WLAN	8.15	± 9.6 %
10117	CAG	IEEE 802.11n (HT Mixed, 13.5 Mbps, BPSK)	WLAN	8.07	± 9.6 %
10118	CAD	IEEE 802.11n (HT Mixed, 81 Mbps, 16-QAM)	WLAN	8.59	± 9.6 %
10119	CAD	IEEE 802.11n (HT Mixed, 135 Mbps, 64-QAM)	WLAN	8.13	± 9.6 %
10140	CAD	LTE-FDD (SC-FDMA, 100% RB, 15 MHz, 16-QAM)	LTE-FDD	6.49	± 9.6 %
10141	CAD	LTE-FDD (SC-FDMA, 100% RB, 15 MHz, 64-QAM)	LTE-FDD	6.53	± 9.6 %
10142	CAD	LTE-FDD (SC-FDMA, 100% RB, 3 MHz, QPSK)	LTE-FDD	5.73	± 9.6 %
10143	CAD	LTE-FDD (SC-FDMA, 100% RB, 3 MHz, 16-QAM)	LTE-FDD	6.35	± 9.6 %
10144	CAC	LTE-FDD (SC-FDMA, 100% RB, 3 MHz, 64-QAM)	LTE-FDD	6.65	± 9.6 %
10145	CAC	LTE-FDD (SC-FDMA, 100% RB, 1.4 MHz, QPSK)	LTE-FDD	5.76	± 9.6 %
10146	CAC	LTE-FDD (SC-FDMA, 100% RB, 1.4 MHz, 16-QAM)	LTE-FDD	6.41	± 9.6 %
10147	CAC	LTE-FDD (SC-FDMA, 100% RB, 1.4 MHz, 64-QAM)	LTE-FDD	6.72	± 9.6 %
10149	CAE	LTE-FDD (SC-FDMA, 50% RB, 20 MHz, 16-QAM)	LTE-FDD	6.42	± 9.6 %
10150	CAE	LTE-FDD (SC-FDMA, 50% RB, 20 MHz, 64-QAM)	LTE-FDD	6.60	± 9.6 %
10151	CAE	LTE-TDD (SC-FDMA, 50% RB, 20 MHz, QPSK)	LTE-TDD	9.28	± 9.6 %
10152	CAE	LTE-TDD (SC-FDMA, 50% RB, 20 MHz, 16-QAM)	LTE-TDD	9.92	± 9.6 %
10153	CAE	LTE-TDD (SC-FDMA, 50% RB, 20 MHz, 64-QAM)	LTE-TDD	10.05	± 9.6 %
10154	CAF	LTE-FDD (SC-FDMA, 50% RB, 10 MHz, QPSK)	LTE-FDD	5.75	± 9.6 %
10155	CAF	LTE-FDD (SC-FDMA, 50% RB, 10 MHz, 16-QAM)	LTE-FDD	6.43	± 9.6 %
10156	CAF	LTE-FDD (SC-FDMA, 50% RB, 5 MHz, QPSK)	LTE-FDD	5.79	± 9.6 %
10157	CAE	LTE-FDD (SC-FDMA, 50% RB, 5 MHz, 16-QAM)	LTE-FDD	6.49	± 9.6 %
10158	CAE	LTE-FDD (SC-FDMA, 50% RB, 10 MHz, 64-QAM)	LTE-FDD	6.62	± 9.6 %
10159	CAG	LTE-FDD (SC-FDMA, 50% RB, 5 MHz, 64-QAM)	LTE-FDD	6.56	± 9.6 %
10160	CAG	LTE-FDD (SC-FDMA, 50% RB, 15 MHz, QPSK)	LTE-FDD	5.82	± 9.6 %
10161	CAG	LTE-FDD (SC-FDMA, 50% RB, 15 MHz, 16-QAM)	LTE-FDD	6.43	± 9.6 %
10162	CAG	LTE-FDD (SC-FDMA, 50% RB, 15 MHz, 64-QAM)	LTE-FDD	6.58	± 9.6 %
10166	CAG	LTE-FDD (SC-FDMA, 50% RB, 1.4 MHz, QPSK)	LTE-FDD	5.46	± 9.6 %
10167	CAG	LTE-FDD (SC-FDMA, 50% RB, 1.4 MHz, 16-QAM)	LTE-FDD	6.21	± 9.6 %
10168	CAG	LTE-FDD (SC-FDMA, 50% RB, 1.4 MHz, 64-QAM)	LTE-FDD	6.79	± 9.6 %
10169	CAG	LTE-FDD (SC-FDMA, 1 RB, 20 MHz, QPSK)	LTE-FDD	5.73	± 9.6 %
10170	CAG	LTE-FDD (SC-FDMA, 1 RB, 20 MHz, 16-QAM)	LTE-FDD	6.52	± 9.6 %
10171	CAE	LTE-FDD (SC-FDMA, 1 RB, 20 MHz, 64-QAM)	LTE-FDD	6.49	± 9.6 %
10172	CAE	LTE-TDD (SC-FDMA, 1 RB, 20 MHz, QPSK)	LTE-TDD	9.21	± 9.6 %
10173	CAE	LTE-TDD (SC-FDMA, 1 RB, 20 MHz, 16-QAM)	LTE-TDD	9.48	± 9.6 %
10174	CAF	LTE-TDD (SC-FDMA, 1 RB, 20 MHz, 64-QAM)	LTE-TDD	10.25	± 9.6 %
10175	CAF	LTE-FDD (SC-FDMA, 1 RB, 10 MHz, QPSK)	LTE-FDD	5.72	± 9.6 %
10176	CAF	LTE-FDD (SC-FDMA, 1 RB, 10 MHz, 16-QAM)	LTE-FDD	6.52	± 9.6 %
10177	CAE	LTE-FDD (SC-FDMA, 1 RB, 5 MHz, QPSK)	LTE-FDD	5.73	± 9.6 %
10178	CAE	LTE-FDD (SC-FDMA, 1 RB, 5 MHz, 16-QAM)	LTE-FDD	6.52	± 9.6 %
10179	AAE	LTE-FDD (SC-FDMA, 1 RB, 10 MHz, 64-QAM)	LTE-FDD	6.50	± 9.6 %
10180	CAG	LTE-FDD (SC-FDMA, 1 RB, 5 MHz, 64-QAM)	LTE-FDD	6.50	± 9.6 %

EX3DV4– SN:3922 August 16, 2021

10181	CAG	LTE-FDD (SC-FDMA, 1 RB, 15 MHz, QPSK)	LTE-FDD	5.72	± 9.6 %
10182	CAG	LTE-FDD (SC-FDMA, 1 RB, 15 MHz, 16-QAM)	LTE-FDD	6.52	± 9.6 %
10183	CAG	LTE-FDD (SC-FDMA, 1 RB, 15 MHz, 64-QAM)	LTE-FDD	6.50	± 9.6 %
10184	CAG	LTE-FDD (SC-FDMA, 1 RB, 3 MHz, QPSK)	LTE-FDD	5.73	± 9.6 %
10185	CAI	LTE-FDD (SC-FDMA, 1 RB, 3 MHz, 16-QAM)	LTE-FDD	6.51	± 9.6 %
10186	CAG	LTE-FDD (SC-FDMA, 1 RB, 3 MHz, 64-QAM)	LTE-FDD	6.50	± 9.6 %
10187	CAG	LTE-FDD (SC-FDMA, 1 RB, 1.4 MHz, QPSK)	LTE-FDD	5.73	± 9.6 %
10188	CAG	LTE-FDD (SC-FDMA, 1 RB, 1.4 MHz, 16-QAM)	LTE-FDD	6.52	± 9.6 %
10189	CAE	LTE-FDD (SC-FDMA, 1 RB, 1.4 MHz, 64-QAM)	LTE-FDD	6.50	± 9.6 %
10193	CAE	IEEE 802.11n (HT Greenfield, 6.5 Mbps, BPSK)	WLAN	8.09	± 9.6 %
10194	AAD	IEEE 802.11n (HT Greenfield, 39 Mbps, 16-QAM)	WLAN	8.12	± 9.6 %
10195	CAE	IEEE 802.11n (HT Greenfield, 65 Mbps, 64-QAM)	WLAN	8.21	± 9.6 %
10196	CAE	IEEE 802.11n (HT Mixed, 6.5 Mbps, BPSK)	WLAN	8.10	± 9.6 %
10197	AAE	IEEE 802.11n (HT Mixed, 39 Mbps, 16-QAM)	WLAN	8.13	± 9.6 %
10198	CAF	IEEE 802.11n (HT Mixed, 65 Mbps, 64-QAM)	WLAN	8.27	± 9.6 %
10219	CAF	IEEE 802.11n (HT Mixed, 7.2 Mbps, BPSK)	WLAN	8.03	± 9.6 %
10220	AAF	IEEE 802.11n (HT Mixed, 43.3 Mbps, 16-QAM)	WLAN	8.13	± 9.6 %
10221	CAC	IEEE 802.11n (HT Mixed, 72.2 Mbps, 64-QAM)	WLAN	8.27	± 9.6 %
10222	CAC	IEEE 802.11n (HT Mixed, 15 Mbps, BPSK)	WLAN	8.06	± 9.6 %
10223	CAD	IEEE 802.11n (HT Mixed, 90 Mbps, 16-QAM)	WLAN	8.48	± 9.6 %
10224	CAD	IEEE 802.11n (HT Mixed, 150 Mbps, 64-QAM)	WLAN	8.08	± 9.6 %
10225	CAD	UMTS-FDD (HSPA+)	WCDMA	5.97	± 9.6 %
10226	CAD	LTE-TDD (SC-FDMA, 1 RB, 1.4 MHz, 16-QAM)	LTE-TDD	9.49	± 9.6 %
10227	CAD	LTE-TDD (SC-FDMA, 1 RB, 1.4 MHz, 64-QAM)	LTE-TDD	10.26	± 9.6 %
10228	CAD	LTE-TDD (SC-FDMA, 1 RB, 1.4 MHz, QPSK)	LTE-TDD	9.22	± 9.6 %
10229	DAC	LTE-TDD (SC-FDMA, 1 RB, 3 MHz, 16-QAM)	LTE-TDD	9.48	± 9.6 %
10230	CAC	LTE-TDD (SC-FDMA, 1 RB, 3 MHz, 64-QAM)	LTE-TDD	10.25	± 9.6 %
10231	CAC	LTE-TDD (SC-FDMA, 1 RB, 3 MHz, QPSK)	LTE-TDD	9.19	± 9.6 %
10232	CAD	LTE-TDD (SC-FDMA, 1 RB, 5 MHz, 16-QAM)	LTE-TDD	9.48	± 9.6 %
10233	CAD	LTE-TDD (SC-FDMA, 1 RB, 5 MHz, 64-QAM)	LTE-TDD	10.25	± 9.6 %
10234	CAD	LTE-TDD (SC-FDMA, 1 RB, 5 MHz, QPSK)	LTE-TDD	9.21	± 9.6 %
10235	CAD	LTE-TDD (SC-FDMA, 1 RB, 10 MHz, 16-QAM)	LTE-TDD	9.48	± 9.6 %
10236	CAD	LTE-TDD (SC-FDMA, 1 RB, 10 MHz, 64-QAM)	LTE-TDD	10.25	± 9.6 %
10237	CAD	LTE-TDD (SC-FDMA, 1 RB, 10 MHz, QPSK)	LTE-TDD	9.21	± 9.6 %
10238	CAB	LTE-TDD (SC-FDMA, 1 RB, 15 MHz, 16-QAM)	LTE-TDD	9.48	± 9.6 %
10239	CAB	LTE-TDD (SC-FDMA, 1 RB, 15 MHz, 64-QAM)	LTE-TDD	10.25	± 9.6 %
10240	CAB	LTE-TDD (SC-FDMA, 1 RB, 15 MHz, QPSK)	LTE-TDD	9.21	± 9.6 %
10241	CAB	LTE-TDD (SC-FDMA, 50% RB, 1.4 MHz, 16-QAM)	LTE-TDD	9.82	± 9.6 %
10242	CAD	LTE-TDD (SC-FDMA, 50% RB, 1.4 MHz, 64-QAM)	LTE-TDD	9.86	± 9.6 %
10243	CAD	LTE-TDD (SC-FDMA, 50% RB, 1.4 MHz, QPSK)	LTE-TDD	9.46	± 9.6 %
10244	CAD	LTE-TDD (SC-FDMA, 50% RB, 3 MHz, 16-QAM)	LTE-TDD	10.06	± 9.6 %
10245	CAG	LTE-TDD (SC-FDMA, 50% RB, 3 MHz, 64-QAM)	LTE-TDD	10.06	± 9.6 %
10246	CAG	LTE-TDD (SC-FDMA, 50% RB, 3 MHz, QPSK)	LTE-TDD	9.30	± 9.6 %
10247	CAG	LTE-TDD (SC-FDMA, 50% RB, 5 MHz, 16-QAM)	LTE-TDD	9.91	± 9.6 %
10248	CAG	LTE-TDD (SC-FDMA, 50% RB, 5 MHz, 64-QAM)	LTE-TDD	10.09	± 9.6 %
10249	CAG	LTE-TDD (SC-FDMA, 50% RB, 5 MHz, QPSK)	LTE-TDD	9.29	± 9.6 %
10250	CAG	LTE-TDD (SC-FDMA, 50% RB, 10 MHz, 16-QAM)	LTE-TDD	9.81	± 9.6 %
10251	CAF	LTE-TDD (SC-FDMA, 50% RB, 10 MHz, 64-QAM)	LTE-TDD	10.17	± 9.6 %
10252	CAF	LTE-TDD (SC-FDMA, 50% RB, 10 MHz, QPSK)	LTE-TDD	9.24	± 9.6 %
10253	CAF	LTE-TDD (SC-FDMA, 50% RB, 15 MHz, 16-QAM)	LTE-TDD	9.90	± 9.6 %
10254	CAB	LTE-TDD (SC-FDMA, 50% RB, 15 MHz, 64-QAM)	LTE-TDD	10.14	± 9.6 %
10255	CAB	LTE-TDD (SC-FDMA, 50% RB, 15 MHz, QPSK)	LTE-TDD	9.20	± 9.6 %
10256	CAB	LTE-TDD (SC-FDMA, 100% RB, 1.4 MHz, 16-QAM)	LTE-TDD	9.96	± 9.6 %
10257	CAD	LTE-TDD (SC-FDMA, 100% RB, 1.4 MHz, 64-QAM)	LTE-TDD	10.08	± 9.6 %
10258	CAD	LTE-TDD (SC-FDMA, 100% RB, 1.4 MHz, QPSK)	LTE-TDD	9.34	± 9.6 %
10259	CAD	LTE-TDD (SC-FDMA, 100% RB, 3 MHz, 16-QAM)	LTE-TDD	9.98	± 9.6 %

10260	CAG	LTE-TDD (SC-FDMA, 100% RB, 3 MHz, 64-QAM)	LTE-TDD	9.97	± 9.6 %
10261	CAG	LTE-TDD (SC-FDMA, 100% RB, 3 MHz, QPSK)	LTE-TDD	9.24	± 9.6 %
10262	CAG	LTE-TDD (SC-FDMA, 100% RB, 5 MHz, 16-QAM)	LTE-TDD	9.83	± 9.6 %
10263	CAG	LTE-TDD (SC-FDMA, 100% RB, 5 MHz, 64-QAM)	LTE-TDD	10.16	± 9.6 %
10264	CAG	LTE-TDD (SC-FDMA, 100% RB, 5 MHz, QPSK)	LTE-TDD	9.23	± 9.6 %
10265	CAG	LTE-TDD (SC-FDMA, 100% RB, 10 MHz, 16-QAM)	LTE-TDD	9.92	± 9.6 %
10266	CAF	LTE-TDD (SC-FDMA, 100% RB, 10 MHz, 64-QAM)	LTE-TDD	10.07	± 9.6 %
10267	CAF	LTE-TDD (SC-FDMA, 100% RB, 10 MHz, QPSK)	LTE-TDD	9.30	± 9.6 %
10268	CAF	LTE-TDD (SC-FDMA, 100% RB, 15 MHz, 16-QAM)	LTE-TDD	10.06	± 9.6 %
10269	CAB	LTE-TDD (SC-FDMA, 100% RB, 15 MHz, 64-QAM)	LTE-TDD	10.13	± 9.6 %
10270	CAB	LTE-TDD (SC-FDMA, 100% RB, 15 MHz, QPSK)	LTE-TDD	9.58	± 9.6 %
10274	CAB	UMTS-FDD (HSUPA, Subtest 5, 3GPP Rel8.10)	WCDMA	4.87	± 9.6 %
10275	CAD	UMTS-FDD (HSUPA, Subtest 5, 3GPP Rel8.4)	WCDMA	3.96	± 9.6 %
10277	CAD	PHS (QPSK)	PHS	11.81	± 9.6 %
10278	CAD	PHS (QPSK, BW 884MHz, Rolloff 0.5)	PHS	11.81	± 9.6 %
10279	CAG	PHS (QPSK, BW 884MHz, Rolloff 0.38)	PHS	12.18	± 9.6 %
10290	CAG	CDMA2000, RC1, SO55, Full Rate	CDMA2000	3.91	± 9.6 %
10291	CAG	CDMA2000, RC3, SO55, Full Rate	CDMA2000	3.46	± 9.6 %
10292	CAG	CDMA2000, RC3, SO32, Full Rate	CDMA2000	3.39	± 9.6 %
10293	CAG	CDMA2000, RC3, SO3, Full Rate	CDMA2000	3.50	± 9.6 %
10295	CAG	CDMA2000, RC1, SO3, 1/8th Rate 25 fr.	CDMA2000	12.49	± 9.6 %
10297	CAF	LTE-FDD (SC-FDMA, 50% RB, 20 MHz, QPSK)	LTE-FDD	5.81	± 9.6 %
10298	CAF	LTE-FDD (SC-FDMA, 50% RB, 3 MHz, QPSK)	LTE-FDD	5.72	± 9.6 %
10299	CAF	LTE-FDD (SC-FDMA, 50% RB, 3 MHz, 16-QAM)	LTE-FDD	6.39	± 9.6 %
10300	CAC	LTE-FDD (SC-FDMA, 50% RB, 3 MHz, 64-QAM)	LTE-FDD	6.60	± 9.6 %
10301	CAC	IEEE 802.16e WiMAX (29:18, 5ms, 10MHz, QPSK, PUSC)	WiMAX	12.03	± 9.6 %
10302	CAB	IEEE 802.16e WiMAX (29:18, 5ms, 10MHz, QPSK, PUSC, 3CTRL)	WiMAX	12.57	± 9.6 %
10303	CAB	IEEE 802.16e WiMAX (31:15, 5ms, 10MHz, 64QAM, PUSC)	WiMAX	12.52	± 9.6 %
10304	CAA	IEEE 802.16e WiMAX (29:18, 5ms, 10MHz, 64QAM, PUSC)	WiMAX	11.86	± 9.6 %
10305	CAA	IEEE 802.16e WiMAX (31:15, 10ms, 10MHz, 64QAM, PUSC)	WiMAX	15.24	± 9.6 %
10306	CAA	IEEE 802.16e WiMAX (29:18, 10ms, 10MHz, 64QAM, PUSC)	WiMAX	14.67	± 9.6 %
10307	AAB	IEEE 802.16e WiMAX (29:18, 10ms, 10MHz, QPSK, PUSC)	WiMAX	14.49	± 9.6 %
10308	AAB	IEEE 802.16e WiMAX (29:18, 10ms, 10MHz, 16QAM, PUSC)	WiMAX	14.46	± 9.6 %
10309	AAB	IEEE 802.16e WiMAX (29:18, 10ms, 10MHz, 16QAM,AMC 2x3)	WiMAX	14.58	± 9.6 %
10310	AAB	IEEE 802.16e WiMAX (29:18, 10ms, 10MHz, QPSK, AMC 2x3	WiMAX	14.57	± 9.6 %
10311	AAB	LTE-FDD (SC-FDMA, 100% RB, 15 MHz, QPSK)	LTE-FDD	6.06	± 9.6 %
10313	AAD	iDEN 1:3	iDEN	10.51	± 9.6 %
10314	AAD	iDEN 1:6	iDEN	13.48	± 9.6 %
10315	AAD	IEEE 802.11b WiFi 2.4 GHz (DSSS, 1 Mbps, 96pc dc)	WLAN	1.71	± 9.6 %
10316	AAD	IEEE 802.11g WiFi 2.4 GHz (ERP-OFDM, 6 Mbps, 96pc dc)	WLAN	8.36	± 9.6 %
10317	AAA	IEEE 802.11a WiFi 5 GHz (OFDM, 6 Mbps, 96pc dc)	WLAN	8.36	± 9.6 %
10352	AAA	Pulse Waveform (200Hz, 10%)	Generic	10.00	± 9.6 %
10353	AAA	Pulse Waveform (200Hz, 20%)	Generic	6.99	± 9.6 %
10354	AAA	Pulse Waveform (200Hz, 40%)	Generic	3.98	± 9.6 %
10355	AAA	Pulse Waveform (200Hz, 60%)	Generic	2.22	± 9.6 %
10356	AAA	Pulse Waveform (200Hz, 80%)	Generic	0.97	± 9.6 %
10387	AAA	QPSK Waveform, 1 MHz	Generic	5.10	± 9.6 %
10388	AAA	QPSK Waveform, 10 MHz	Generic	5.22	± 9.6 %
10396	AAA	64-QAM Waveform, 100 kHz	Generic	6.27	± 9.6 %
10399	AAA	64-QAM Waveform, 40 MHz	Generic	6.27	± 9.6 %
10400	AAD	IEEE 802.11ac WiFi (20MHz, 64-QAM, 99pc dc)	WLAN	8.37	± 9.6 %
10401	AAA	IEEE 802.11ac WiFi (40MHz, 64-QAM, 99pc dc)	WLAN	8.60	± 9.6 %
10402	AAA	IEEE 802.11ac WiFi (80MHz, 64-QAM, 99pc dc)	WLAN	8.53	± 9.6 %
10403	AAB	CDMA2000 (1xEV-DO, Rev. 0)	CDMA2000	3.76	± 9.6 %
10404	AAB	CDMA2000 (1xEV-DO, Rev. A)	CDMA2000	3.77	± 9.6 %
10406	AAD	CDMA2000, RC3, SO32, SCH0, Full Rate	CDMA2000	5.22	± 9.6 %

EX3DV4– SN:3922 August 16, 2021

10410	AAA	LTE-TDD (SC-FDMA, 1 RB, 10 MHz, QPSK, UL Sub=2,3,4,7,8,9)	LTE-TDD	7.82	± 9.6 %
10414	AAA	WLAN CCDF, 64-QAM, 40MHz	Generic	8.54	± 9.6 %
10415	AAA	IEEE 802.11b WiFi 2.4 GHz (DSSS, 1 Mbps, 99pc dc)	WLAN	1.54	± 9.6 %
10416	AAA	IEEE 802.11g WiFi 2.4 GHz (ERP-OFDM, 6 Mbps, 99pc dc)	WLAN	8.23	± 9.6 %
10417	AAA	IEEE 802.11a/h WiFi 5 GHz (OFDM, 6 Mbps, 99pc dc)	WLAN	8.23	± 9.6 %
10418	AAA	IEEE 802.11g WiFi 2.4 GHz (DSSS-OFDM, 6 Mbps, 99pc, Long)	WLAN	8.14	± 9.6 %
10419	AAA	IEEE 802.11g WiFi 2.4 GHz (DSSS-OFDM, 6 Mbps, 99pc, Short)	WLAN	8.19	± 9.6 %
10422	AAA	IEEE 802.11n (HT Greenfield, 7.2 Mbps, BPSK)	WLAN	8.32	± 9.6 %
10423	AAA	IEEE 802.11n (HT Greenfield, 43.3 Mbps, 16-QAM)	WLAN	8.47	± 9.6 %
10424	AAE	IEEE 802.11n (HT Greenfield, 72.2 Mbps, 64-QAM)	WLAN	8.40	± 9.6 %
10425	AAE	IEEE 802.11n (HT Greenfield, 15 Mbps, BPSK)	WLAN	8.41	± 9.6 %
10426	AAE	IEEE 802.11n (HT Greenfield, 90 Mbps, 16-QAM)	WLAN	8.45	± 9.6 %
10427	AAB	IEEE 802.11n (HT Greenfield, 150 Mbps, 64-QAM)	WLAN	8.41	± 9.6 %
10430	AAB	LTE-FDD (OFDMA, 5 MHz, E-TM 3.1)	LTE-FDD	8.28	± 9.6 %
10431	AAC	LTE-FDD (OFDMA, 10 MHz, E-TM 3.1)	LTE-FDD	8.38	± 9.6 %
10432	AAB	LTE-FDD (OFDMA, 15 MHz, E-TM 3.1)	LTE-FDD	8.34	± 9.6 %
10433	AAC	LTE-FDD (OFDMA, 20 MHz, E-TM 3.1)	LTE-FDD	8.34	± 9.6 %
10434	AAG	W-CDMA (BS Test Model 1, 64 DPCH)	WCDMA	8.60	± 9.6 %
10435	AAA	LTE-TDD (SC-FDMA, 1 RB, 20 MHz, QPSK, UL Sub)	LTE-TDD	7.82	± 9.6 %
10447	AAA	LTE-FDD (OFDMA, 5 MHz, E-TM 3.1, Clipping 44%)	LTE-FDD	7.56	± 9.6 %
10448	AAA	LTE-FDD (OFDMA, 10 MHz, E-TM 3.1, Clippin 44%)	LTE-FDD	7.53	± 9.6 %
10449	AAC	LTE-FDD (OFDMA, 15 MHz, E-TM 3.1, Cliping 44%)	LTE-FDD	7.51	± 9.6 %
10450	AAA	LTE-FDD (OFDMA, 20 MHz, E-TM 3.1, Clipping 44%)	LTE-FDD	7.48	± 9.6 %
10451	AAA	W-CDMA (BS Test Model 1, 64 DPCH, Clipping 44%)	WCDMA	7.59	± 9.6 %
10453	AAC	Validation (Square, 10ms, 1ms)	Test	10.00	± 9.6 %
10456	AAC	IEEE 802.11ac WiFi (160MHz, 64-QAM, 99pc dc)	WLAN	8.63	± 9.6 %
10457	AAC	UMTS-FDD (DC-HSDPA)	WCDMA	6.62	± 9.6 %
10458	AAC	CDMA2000 (1xEV-DO, Rev. B, 2 carriers)	CDMA2000	6.55	± 9.6 %
10459	AAC	CDMA2000 (1xEV-DO, Rev. B, 3 carriers)	CDMA2000	8.25	± 9.6 %
10460	AAC	UMTS-FDD (WCDMA, AMR)	WCDMA	2.39	± 9.6 %
10461	AAC	LTE-TDD (SC-FDMA, 1 RB, 1.4 MHz, QPSK, UL Sub)	LTE-TDD	7.82	± 9.6 %
10462	AAC	LTE-TDD (SC-FDMA, 1 RB, 1.4 MHz, 16-QAM, UL Sub)	LTE-TDD	8.30	± 9.6 %
10463	AAD	LTE-TDD (SC-FDMA, 1 RB, 1.4 MHz, 64-QAM, UL Sub)	LTE-TDD	8.56	± 9.6 %
10464	AAD	LTE-TDD (SC-FDMA, 1 RB, 3 MHz, QPSK, UL Sub)	LTE-TDD	7.82	± 9.6 %
10465	AAC	LTE-TDD (SC-FDMA, 1 RB, 3 MHz, 16-QAM, UL Sub)	LTE-TDD	8.32	± 9.6 %
10466	AAC	LTE-TDD (SC-FDMA, 1 RB, 3 MHz, 64-QAM, UL Sub)	LTE-TDD	8.57	± 9.6 %
10467	AAA	LTE-TDD (SC-FDMA, 1 RB, 5 MHz, QPSK, UL Sub)	LTE-TDD	7.82	± 9.6 %
10468	AAF	LTE-TDD (SC-FDMA, 1 RB, 5 MHz, 16-QAM, UL Sub)	LTE-TDD	8.32	± 9.6 %
10469	AAD	LTE-TDD (SC-FDMA, 1 RB, 5 MHz, 64-QAM, UL Sub)	LTE-TDD	8.56	± 9.6 %
10470	AAD	LTE-TDD (SC-FDMA, 1 RB, 10 MHz, QPSK, UL Sub)	LTE-TDD	7.82	± 9.6 %
10471	AAC	LTE-TDD (SC-FDMA, 1 RB, 10 MHz, 16-QAM, UL Sub)	LTE-TDD	8.32	± 9.6 %
10472	AAC	LTE-TDD (SC-FDMA, 1 RB, 10 MHz, 64-QAM, UL Sub)	LTE-TDD	8.57	± 9.6 %
10473	AAA	LTE-TDD (SC-FDMA, 1 RB, 15 MHz, QPSK, UL Sub)	LTE-TDD	7.82	± 9.6 %
10474	AAC	LTE-TDD (SC-FDMA, 1 RB, 15 MHz, 16-QAM, UL Sub)	LTE-TDD	8.32	± 9.6 %
10475	AAD	LTE-TDD (SC-FDMA, 1 RB, 15 MHz, 64-QAM, UL Sub)	LTE-TDD	8.57	± 9.6 %
10477	AAC	LTE-TDD (SC-FDMA, 1 RB, 20 MHz, 16-QAM, UL Sub)	LTE-TDD	8.32	± 9.6 %
10478	AAC	LTE-TDD (SC-FDMA, 1 RB, 20 MHz, 64-QAM, UL Sub)	LTE-TDD	8.57	± 9.6 %
10479	AAC	LTE-TDD (SC-FDMA, 50% RB, 1.4 MHz, QPSK, UL Sub)	LTE-TDD	7.74	± 9.6 %
10480	AAA	LTE-TDD (SC-FDMA, 50% RB, 1.4 MHz, 16-QAM, UL Sub)	LTE-TDD	8.18	± 9.6 %
10481	AAA	LTE-TDD (SC-FDMA, 50% RB, 1.4 MHz, 64-QAM, UL Sub)	LTE-TDD	8.45	± 9.6 %
10482	AAA	LTE-TDD (SC-FDMA, 50% RB, 3 MHz, QPSK, UL Sub)	LTE-TDD	7.71	± 9.6 %
10483	AAA	LTE-TDD (SC-FDMA, 50% RB, 3 MHz, 16-QAM, Sub)	LTE-TDD	8.39	± 9.6 %
10484	AAB	LTE-TDD (SC-FDMA, 50% RB, 3 MHz, 64-QAM, UL Sub)	LTE-TDD	8.47	± 9.6 %
10485	AAB	LTE-TDD (SC-FDMA, 50% RB, 5 MHz, QPSK, UL Sub)	LTE-TDD	7.59	± 9.6 %
10486	AAB	LTE-TDD (SC-FDMA, 50% RB, 5 MHz, 16-QAM, UL Sub)	LTE-TDD	8.38	± 9.6 %
10487	AAC	LTE-TDD (SC-FDMA, 50% RB, 5 MHz, 64-QAM, UL Sub)	LTE-TDD	8.60	± 9.6 %

EX3DV4– SN:3922

August 16, 2021

10488	AAC	LTE-TDD (SC-FDMA, 50% RB, 10 MHz, QPSK, UL Sub)	LTE-TDD	7.70	± 9.6 %
10489	AAC	LTE-TDD (SC-FDMA, 50% RB, 10 MHz, 16-QAM, UL Sub)	LTE-TDD	8.31	± 9.6 %
10490	AAF	LTE-TDD (SC-FDMA, 50% RB, 10 MHz, 64-QAM, UL Sub)	LTE-TDD	8.54	± 9.6 %
10491	AAF	LTE-TDD (SC-FDMA, 50% RB, 15 MHz, QPSK, UL Sub)	LTE-TDD	7.74	± 9.6 %
10492	AAF	LTE-TDD (SC-FDMA, 50% RB, 15 MHz, 16-QAM, UL Sub)	LTE-TDD	8.41	± 9.6 %
10493	AAF	LTE-TDD (SC-FDMA, 50% RB, 15 MHz, 64-QAM, UL Sub)	LTE-TDD	8.55	± 9.6 %
10494	AAF	LTE-TDD (SC-FDMA, 50% RB, 20 MHz, QPSK, UL Sub)	LTE-TDD	7.74	± 9.6 %
10495	AAF	LTE-TDD (SC-FDMA, 50% RB, 20 MHz, 16-QAM, UL Sub)	LTE-TDD	8.37	± 9.6 %
10496	AAE	LTE-TDD (SC-FDMA, 50% RB, 20 MHz, 64-QAM, UL Sub)	LTE-TDD	8.54	± 9.6 %
10497	AAE	LTE-TDD (SC-FDMA, 100% RB, 1.4 MHz, QPSK, UL Sub)	LTE-TDD	7.67	± 9.6 %
10498	AAE	LTE-TDD (SC-FDMA, 100% RB, 1.4 MHz, 16-QAM, UL Sub)	LTE-TDD	8.40	± 9.6 %
10499	AAC	LTE-TDD (SC-FDMA, 100% RB, 1.4 MHz, 64-QAM, UL Sub)	LTE-TDD	8.68	± 9.6 %
10500	AAF	LTE-TDD (SC-FDMA, 100% RB, 3 MHz, QPSK, UL Sub)	LTE-TDD	7.67	± 9.6 %
10501	AAF	LTE-TDD (SC-FDMA, 100% RB, 3 MHz, 16-QAM, UL Sub)	LTE-TDD	8.44	± 9.6 %
10502	AAB	LTE-TDD (SC-FDMA, 100% RB, 3 MHz, 64-QAM, UL Sub)	LTE-TDD	8.52	± 9.6 %
10503	AAB	LTE-TDD (SC-FDMA, 100% RB, 5 MHz, QPSK, UL Sub)	LTE-TDD	7.72	± 9.6 %
10504	AAB	LTE-TDD (SC-FDMA, 100% RB, 5 MHz, 16-QAM, UL Sub)	LTE-TDD	8.31	± 9.6 %
10505	AAC	LTE-TDD (SC-FDMA, 100% RB, 5 MHz, 64-QAM, UL Sub)	LTE-TDD	8.54	± 9.6 %
10506	AAC	LTE-TDD (SC-FDMA, 100% RB, 10 MHz, QPSK, UL Sub)	LTE-TDD	7.74	± 9.6 %
10507	AAC	LTE-TDD (SC-FDMA, 100% RB, 10 MHz, 16-QAM, UL Sub)	LTE-TDD	8.36	± 9.6 %
10508	AAF	LTE-TDD (SC-FDMA, 100% RB, 10 MHz, 64-QAM, UL Sub)	LTE-TDD	8.55	± 9.6 %
10509	AAF	LTE-TDD (SC-FDMA, 100% RB, 15 MHz, QPSK, UL Sub)	LTE-TDD	7.99	± 9.6 %
10510	AAF	LTE-TDD (SC-FDMA, 100% RB, 15 MHz, 16-QAM, UL Sub)	LTE-TDD	8.49	± 9.6 %
10511	AAF	LTE-TDD (SC-FDMA, 100% RB, 15 MHz, 64-QAM, UL Sub)	LTE-TDD	8.51	± 9.6 %
10512	AAF	LTE-TDD (SC-FDMA, 100% RB, 20 MHz, QPSK, UL Sub)	LTE-TDD	7.74	± 9.6 %
10513	AAF	LTE-TDD (SC-FDMA, 100% RB, 20 MHz, 16-QAM, UL Sub)	LTE-TDD	8.42	± 9.6 %
10514	AAE	LTE-TDD (SC-FDMA, 100% RB, 20 MHz, 64-QAM, UL Sub)	LTE-TDD	8.45	± 9.6 %
10515	AAE	IEEE 802.11b WiFi 2.4 GHz (DSSS, 2 Mbps, 99pc dc)	WLAN	1.58	± 9.6 %
10516	AAE	IEEE 802.11b WiFi 2.4 GHz (DSSS, 5.5 Mbps, 99pc dc)	WLAN	1.57	± 9.6 %
10517	AAF	IEEE 802.11b WiFi 2.4 GHz (DSSS, 11 Mbps, 99pc dc)	WLAN	1.58	± 9.6 %
10518	AAF	IEEE 802.11a/h WiFi 5 GHz (OFDM, 9 Mbps, 99pc dc)	WLAN	8.23	± 9.6 %
10519	AAF	IEEE 802.11a/h WiFi 5 GHz (OFDM, 12 Mbps, 99pc dc)	WLAN	8.39	± 9.6 %
10520	AAB	IEEE 802.11a/h WiFi 5 GHz (OFDM, 18 Mbps, 99pc dc)	WLAN	8.12	± 9.6 %
10521	AAB	IEEE 802.11a/h WiFi 5 GHz (OFDM, 24 Mbps, 99pc dc)	WLAN	7.97	± 9.6 %
10522	AAB	IEEE 802.11a/h WiFi 5 GHz (OFDM, 36 Mbps, 99pc dc)	WLAN	8.45	± 9.6 %
10523	AAC	IEEE 802.11a/h WiFi 5 GHz (OFDM, 48 Mbps, 99pc dc)	WLAN	8.08	± 9.6 %
10524	AAC	IEEE 802.11a/h WiFi 5 GHz (OFDM, 54 Mbps, 99pc dc)	WLAN	8.27	± 9.6 %
10525	AAC	IEEE 802.11ac WiFi (20MHz, MCS0, 99pc dc)	WLAN	8.36	± 9.6 %
10526	AAF	IEEE 802.11ac WiFi (20MHz, MCS1, 99pc dc)	WLAN	8.42	± 9.6 %
10527	AAF	IEEE 802.11ac WiFi (20MHz, MCS2, 99pc dc)	WLAN	8.21	± 9.6 %
10528	AAF	IEEE 802.11ac WiFi (20MHz, MCS3, 99pc dc)	WLAN	8.36	± 9.6 %
10529	AAF	IEEE 802.11ac WiFi (20MHz, MCS4, 99pc dc)	WLAN	8.36	± 9.6 %
10531	AAF	IEEE 802.11ac WiFi (20MHz, MCS6, 99pc dc)	WLAN	8.43	± 9.6 %
10532	AAF	IEEE 802.11ac WiFi (20MHz, MCS7, 99pc dc)	WLAN	8.29	± 9.6 %
10533	AAE	IEEE 802.11ac WiFi (20MHz, MCS8, 99pc dc)	WLAN	8.38	± 9.6 %
10534	AAE	IEEE 802.11ac WiFi (40MHz, MCS0, 99pc dc)	WLAN	8.45	± 9.6 %
10535	AAE	IEEE 802.11ac WiFi (40MHz, MCS1, 99pc dc)	WLAN	8.45	± 9.6 %
10536	AAF	IEEE 802.11ac WiFi (40MHz, MCS2, 99pc dc)	WLAN	8.32	± 9.6 %
10537	AAF	IEEE 802.11ac WiFi (40MHz, MCS3, 99pc dc)	WLAN	8.44	± 9.6 %
10538	AAF	IEEE 802.11ac WiFi (40MHz, MCS4, 99pc dc)	WLAN	8.54	± 9.6 %
10540	AAA	IEEE 802.11ac WiFi (40MHz, MCS6, 99pc dc)	WLAN	8.39	± 9.6 %
10541	AAA	IEEE 802.11ac WiFi (40MHz, MCS7, 99pc dc)	WLAN	8.46	± 9.6 %
10542	AAA	IEEE 802.11ac WiFi (40MHz, MCS8, 99pc dc)	WLAN	8.65	± 9.6 %
10543	AAC	IEEE 802.11ac WiFi (40MHz, MCS9, 99pc dc)	WLAN	8.65	± 9.6 %
10544	AAC	IEEE 802.11ac WiFi (80MHz, MCS0, 99pc dc)	WLAN	8.47	± 9.6 %
10545	AAC	IEEE 802.11ac WiFi (80MHz, MCS1, 99pc dc)	WLAN	8.55	± 9.6 %

UL Japan, Inc.
Ise EMC Lab.
4383-326 Asama-cho, Ise-shi, Mie-ken 516-0021 JAPAN
Telephone: +81 596 24 8999
Facsimile: +81 596 24 8124

10546	AAC	IEEE 802.11ac WiFi (80MHz, MCS2, 99pc dc)	WLAN	8.35	± 9.6 %
10547	AAC	IEEE 802.11ac WiFi (80MHz, MCS3, 99pc dc)	WLAN	8.49	± 9.6 %
10548	AAC	IEEE 802.11ac WiFi (80MHz, MCS4, 99pc dc)	WLAN	8.37	± 9.6 %
10550	AAC	IEEE 802.11ac WiFi (80MHz, MCS6, 99pc dc)	WLAN	8.38	± 9.6 %
10551	AAC	IEEE 802.11ac WiFi (80MHz, MCS7, 99pc dc)	WLAN	8.50	± 9.6 %
10552	AAC	IEEE 802.11ac WiFi (80MHz, MCS8, 99pc dc)	WLAN	8.42	± 9.6 %
10553	AAC	IEEE 802.11ac WiFi (80MHz, MCS9, 99pc dc)	WLAN	8.45	± 9.6 %
10554	AAC	IEEE 802.11ac WiFi (160MHz, MCS0, 99pc dc)	WLAN	8.48	± 9.6 %
10555	AAC	IEEE 802.11ac WiFi (160MHz, MCS1, 99pc dc)	WLAN	8.47	± 9.6 %
10556	AAC	IEEE 802.11ac WiFi (160MHz, MCS2, 99pc dc)	WLAN	8.50	± 9.6 %
10557	AAC	IEEE 802.11ac WiFi (160MHz, MCS3, 99pc dc)	WLAN	8.52	± 9.6 %
10558	AAC	IEEE 802.11ac WiFi (160MHz, MCS4, 99pc dc)	WLAN	8.61	± 9.6 %
10560	AAC	IEEE 802.11ac WiFi (160MHz, MCS6, 99pc dc)	WLAN	8.73	± 9.6 %
10561	AAC	IEEE 802.11ac WiFi (160MHz, MCS7, 99pc dc)	WLAN	8.56	± 9.6 %
10562	AAC	IEEE 802.11ac WiFi (160MHz, MCS8, 99pc dc)	WLAN	8.69	± 9.6 %
10563	AAC	IEEE 802.11ac WiFi (160MHz, MCS9, 99pc dc)	WLAN	8.77	± 9.6 %
10564	AAC	IEEE 802.11g WiFi 2.4 GHz (DSSS-OFDM, 9 Mbps, 99pc dc)	WLAN	8.25	± 9.6 %
10565	AAC	IEEE 802.11g WiFi 2.4 GHz (DSSS-OFDM, 12 Mbps, 99pc dc)	WLAN	8.45	± 9.6 %
10566	AAC	IEEE 802.11g WiFi 2.4 GHz (DSSS-OFDM, 18 Mbps, 99pc dc)	WLAN	8.13	± 9.6 %
10567	AAC	IEEE 802.11g WiFi 2.4 GHz (DSSS-OFDM, 24 Mbps, 99pc dc)	WLAN	8.00	± 9.6 %
10568	AAC	IEEE 802.11g WiFi 2.4 GHz (DSSS-OFDM, 36 Mbps, 99pc dc)	WLAN	8.37	± 9.6 %
10569	AAC	IEEE 802.11g WiFi 2.4 GHz (DSSS-OFDM, 48 Mbps, 99pc dc)	WLAN	8.10	± 9.6 %
10570	AAC	IEEE 802.11g WiFi 2.4 GHz (DSSS-OFDM, 54 Mbps, 99pc dc)	WLAN	8.30	± 9.6 %
10571	AAC	IEEE 802.11b WiFi 2.4 GHz (DSSS, 1 Mbps, 90pc dc)	WLAN	1.99	± 9.6 %
10572	AAC	IEEE 802.11b WiFi 2.4 GHz (DSSS, 2 Mbps, 90pc dc)	WLAN	1.99	± 9.6 %
10573	AAC	IEEE 802.11b WiFi 2.4 GHz (DSSS, 5.5 Mbps, 90pc dc)	WLAN	1.98	± 9.6 %
10574	AAC	IEEE 802.11b WiFi 2.4 GHz (DSSS, 11 Mbps, 90pc dc)	WLAN	1.98	± 9.6 %
10575	AAC	IEEE 802.11g WiFi 2.4 GHz (DSSS-OFDM, 6 Mbps, 90pc dc)	WLAN	8.59	± 9.6 %
10576	AAC	IEEE 802.11g WiFi 2.4 GHz (DSSS-OFDM, 9 Mbps, 90pc dc)	WLAN	8.60	± 9.6 %
10577	AAC	IEEE 802.11g WiFi 2.4 GHz (DSSS-OFDM, 12 Mbps, 90pc dc)	WLAN	8.70	± 9.6 %
10578	AAD	IEEE 802.11g WiFi 2.4 GHz (DSSS-OFDM, 18 Mbps, 90pc dc)	WLAN	8.49	± 9.6 %
10579	AAD	IEEE 802.11g WiFi 2.4 GHz (DSSS-OFDM, 24 Mbps, 90pc dc)	WLAN	8.36	± 9.6 %
10580	AAD	IEEE 802.11g WiFi 2.4 GHz (DSSS-OFDM, 36 Mbps, 90pc dc)	WLAN	8.76	± 9.6 %
10581	AAD	IEEE 802.11g WiFi 2.4 GHz (DSSS-OFDM, 48 Mbps, 90pc dc)	WLAN	8.35	± 9.6 %
10582	AAD	IEEE 802.11g WiFi 2.4 GHz (DSSS-OFDM, 54 Mbps, 90pc dc)	WLAN	8.67	± 9.6 %
10583	AAD	IEEE 802.11a/h WiFi 5 GHz (OFDM, 6 Mbps, 90pc dc)	WLAN	8.59	± 9.6 %
10584	AAD	IEEE 802.11a/h WiFi 5 GHz (OFDM, 9 Mbps, 90pc dc)	WLAN	8.60	± 9.6 %
10585	AAD	IEEE 802.11a/h WiFi 5 GHz (OFDM, 12 Mbps, 90pc dc)	WLAN	8.70	± 9.6 %
10586	AAD	IEEE 802.11a/h WiFi 5 GHz (OFDM, 18 Mbps, 90pc dc)	WLAN	8.49	± 9.6 %
10587	AAA	IEEE 802.11a/h WiFi 5 GHz (OFDM, 24 Mbps, 90pc dc)	WLAN	8.36	± 9.6 %
10588	AAA	IEEE 802.11a/h WiFi 5 GHz (OFDM, 36 Mbps, 90pc dc)	WLAN	8.76	± 9.6 %
10589	AAA	IEEE 802.11a/h WiFi 5 GHz (OFDM, 48 Mbps, 90pc dc)	WLAN	8.35	± 9.6 %
10590	AAA	IEEE 802.11a/h WiFi 5 GHz (OFDM, 54 Mbps, 90pc dc)	WLAN	8.67	± 9.6 %
10591	AAA	IEEE 802.11n (HT Mixed, 20MHz, MCS0, 90pc dc)	WLAN	8.63	± 9.6 %
10592	AAA	IEEE 802.11n (HT Mixed, 20MHz, MCS1, 90pc dc)	WLAN	8.79	± 9.6 %
10593	AAA	IEEE 802.11n (HT Mixed, 20MHz, MCS2, 90pc dc)	WLAN	8.64	± 9.6 %
10594	AAA	IEEE 802.11n (HT Mixed, 20MHz, MCS3, 90pc dc)	WLAN	8.74	± 9.6 %
10595	AAA	IEEE 802.11n (HT Mixed, 20MHz, MCS4, 90pc dc)	WLAN	8.74	± 9.6 %
10596	AAA	IEEE 802.11n (HT Mixed, 20MHz, MCS5, 90pc dc)	WLAN	8.71	± 9.6 %
10597	AAA	IEEE 802.11n (HT Mixed, 20MHz, MCS6, 90pc dc)	WLAN	8.72	± 9.6 %
10598	AAA	IEEE 802.11n (HT Mixed, 20MHz, MCS7, 90pc dc)	WLAN	8.50	± 9.6 %
10599	AAA	IEEE 802.11n (HT Mixed, 40MHz, MCS0, 90pc dc)	WLAN	8.79	± 9.6 %
10600	AAA	IEEE 802.11n (HT Mixed, 40MHz, MCS1, 90pc dc)	WLAN	8.88	± 9.6 %
10601	AAA	IEEE 802.11n (HT Mixed, 40MHz, MCS2, 90pc dc)	WLAN	8.82	± 9.6 %
10602	AAA	IEEE 802.11n (HT Mixed, 40MHz, MCS3, 90pc dc)	WLAN	8.94	± 9.6 %
10603	AAA	IEEE 802.11n (HT Mixed, 40MHz, MCS4, 90pc dc)	WLAN	9.03	± 9.6 %

EX3DV4– SN:3922 August 16, 2021

10604	AAA	IEEE 802.11n (HT Mixed, 40MHz, MCS5, 90pc dc)	WLAN	8.76	± 9.6 %
10605	AAA	IEEE 802.11n (HT Mixed, 40MHz, MCS6, 90pc dc)	WLAN	8.97	± 9.6 %
10606	AAC	IEEE 802.11n (HT Mixed, 40MHz, MCS7, 90pc dc)	WLAN	8.82	± 9.6 %
10607	AAC	IEEE 802.11ac WiFi (20MHz, MCS0, 90pc dc)	WLAN	8.64	± 9.6 %
10608	AAC	IEEE 802.11ac WiFi (20MHz, MCS1, 90pc dc)	WLAN	8.77	± 9.6 %
10609	AAC	IEEE 802.11ac WiFi (20MHz, MCS2, 90pc dc)	WLAN	8.57	± 9.6 %
10610	AAC	IEEE 802.11ac WiFi (20MHz, MCS3, 90pc dc)	WLAN	8.78	± 9.6 %
10611	AAC	IEEE 802.11ac WiFi (20MHz, MCS4, 90pc dc)	WLAN	8.70	± 9.6 %
10612	AAC	IEEE 802.11ac WiFi (20MHz, MCS5, 90pc dc)	WLAN	8.77	± 9.6 %
10613	AAC	IEEE 802.11ac WiFi (20MHz, MCS6, 90pc dc)	WLAN	8.94	± 9.6 %
10614	AAC	IEEE 802.11ac WiFi (20MHz, MCS7, 90pc dc)	WLAN	8.59	± 9.6 %
10615	AAC	IEEE 802.11ac WiFi (20MHz, MCS8, 90pc dc)	WLAN	8.82	± 9.6 %
10616	AAC	IEEE 802.11ac WiFi (40MHz, MCS0, 90pc dc)	WLAN	8.82	± 9.6 %
10617	AAC	IEEE 802.11ac WiFi (40MHz, MCS1, 90pc dc)	WLAN	8.81	± 9.6 %
10618	AAC	IEEE 802.11ac WiFi (40MHz, MCS2, 90pc dc)	WLAN	8.58	± 9.6 %
10619	AAC	IEEE 802.11ac WiFi (40MHz, MCS3, 90pc dc)	WLAN	8.86	± 9.6 %
10620	AAC	IEEE 802.11ac WiFi (40MHz, MCS4, 90pc dc)	WLAN	8.87	± 9.6 %
10621	AAC	IEEE 802.11ac WiFi (40MHz, MCS5, 90pc dc)	WLAN	8.77	± 9.6 %
10622	AAC	IEEE 802.11ac WiFi (40MHz, MCS6, 90pc dc)	WLAN	8.68	± 9.6 %
10623	AAC	IEEE 802.11ac WiFi (40MHz, MCS7, 90pc dc)	WLAN	8.82	± 9.6 %
10624	AAC	IEEE 802.11ac WiFi (40MHz, MCS8, 90pc dc)	WLAN	8.96	± 9.6 %
10625	AAC	IEEE 802.11ac WiFi (40MHz, MCS9, 90pc dc)	WLAN	8.96	± 9.6 %
10626	AAC	IEEE 802.11ac WiFi (80MHz, MCS0, 90pc dc)	WLAN	8.83	± 9.6 %
10627	AAC	IEEE 802.11ac WiFi (80MHz, MCS1, 90pc dc)	WLAN	8.88	± 9.6 %
10628	AAC	IEEE 802.11ac WiFi (80MHz, MCS2, 90pc dc)	WLAN	8.71	± 9.6 %
10629	AAC	IEEE 802.11ac WiFi (80MHz, MCS3, 90pc dc)	WLAN	8.85	± 9.6 %
10630	AAC	IEEE 802.11ac WiFi (80MHz, MCS4, 90pc dc)	WLAN	8.72	± 9.6 %
10631	AAC	IEEE 802.11ac WiFi (80MHz, MCS5, 90pc dc)	WLAN	8.81	± 9.6 %
10632	AAC	IEEE 802.11ac WiFi (80MHz, MCS6, 90pc dc)	WLAN	8.74	± 9.6 %
10633	AAC	IEEE 802.11ac WiFi (80MHz, MCS7, 90pc dc)	WLAN	8.83	± 9.6 %
10634	AAC	IEEE 802.11ac WiFi (80MHz, MCS8, 90pc dc)	WLAN	8.80	± 9.6 %
10635	AAC	IEEE 802.11ac WiFi (80MHz, MCS9, 90pc dc)	WLAN	8.81	± 9.6 %
10636	AAC	IEEE 802.11ac WiFi (160MHz, MCS0, 90pc dc)	WLAN	8.83	± 9.6 %
10637	AAC	IEEE 802.11ac WiFi (160MHz, MCS1, 90pc dc)	WLAN	8.79	± 9.6 %
10638	AAC	IEEE 802.11ac WiFi (160MHz, MCS2, 90pc dc)	WLAN	8.86	± 9.6 %
10639	AAC	IEEE 802.11ac WiFi (160MHz, MCS3, 90pc dc)	WLAN	8.85	± 9.6 %
10640	AAC	IEEE 802.11ac WiFi (160MHz, MCS4, 90pc dc)	WLAN	8.98	± 9.6 %
10641	AAC	IEEE 802.11ac WiFi (160MHz, MCS5, 90pc dc)	WLAN	9.06	± 9.6 %
10642	AAC	IEEE 802.11ac WiFi (160MHz, MCS6, 90pc dc)	WLAN	9.06	± 9.6 %
10643	AAC	IEEE 802.11ac WiFi (160MHz, MCS7, 90pc dc)	WLAN	8.89	± 9.6 %
10644	AAC	IEEE 802.11ac WiFi (160MHz, MCS8, 90pc dc)	WLAN	9.05	± 9.6 %
10645	AAC	IEEE 802.11ac WiFi (160MHz, MCS9, 90pc dc)	WLAN	9.11	± 9.6 %
10646	AAC	LTE-TDD (SC-FDMA, 1 RB, 5 MHz, QPSK, UL Sub=2,7)	LTE-TDD	11.96	± 9.6 %
10647	AAC	LTE-TDD (SC-FDMA, 1 RB, 20 MHz, QPSK, UL Sub=2,7)	LTE-TDD	11.96	± 9.6 %
10648	AAC	CDMA2000 (1x Advanced)	CDMA2000	3.45	± 9.6 %
10652	AAC	LTE-TDD (OFDMA, 5 MHz, E-TM 3.1, Clipping 44%)	LTE-TDD	6.91	± 9.6 %
10653	AAC	LTE-TDD (OFDMA, 10 MHz, E-TM 3.1, Clipping 44%)	LTE-TDD	7.42	± 9.6 %
10654	AAC	LTE-TDD (OFDMA, 15 MHz, E-TM 3.1, Clipping 44%)	LTE-TDD	6.96	± 9.6 %
10655	AAC	LTE-TDD (OFDMA, 20 MHz, E-TM 3.1, Clipping 44%)	LTE-TDD	7.21	± 9.6 %
10658	AAC	Pulse Waveform (200Hz, 10%)	Test	10.00	± 9.6 %
10659	AAC	Pulse Waveform (200Hz, 20%)	Test	6.99	± 9.6 %
10660	AAC	Pulse Waveform (200Hz, 40%)	Test	3.98	± 9.6 %
10661	AAC	Pulse Waveform (200Hz, 60%)	Test	2.22	± 9.6 %
10662	AAC	Pulse Waveform (200Hz, 80%)	Test	0.97	± 9.6 %
10670	AAC	Bluetooth Low Energy	Bluetooth	2.19	± 9.6 %
10671	AAD	IEEE 802.11ax (20MHz, MCS0, 90pc dc)	WLAN	9.09	± 9.6 %

UL Japan, Inc.
Ise EMC Lab.
4383-326 Asama-cho, Ise-shi, Mie-ken 516-0021 JAPAN
Telephone: +81 596 24 8999
Facsimile: +81 596 24 8124

EX3DV4– SN:3922 August 16, 2021

10672	AAD	IEEE 802.11ax (20MHz, MCS1, 90pc dc)	WLAN	8.57	± 9.6 %
10673	AAD	IEEE 802.11ax (20MHz, MCS2, 90pc dc)	WLAN	8.78	± 9.6 %
10674	AAD	IEEE 802.11ax (20MHz, MCS3, 90pc dc)	WLAN	8.74	± 9.6 %
10675	AAD	IEEE 802.11ax (20MHz, MCS4, 90pc dc)	WLAN	8.90	± 9.6 %
10676	AAD	IEEE 802.11ax (20MHz, MCS5, 90pc dc)	WLAN	8.77	± 9.6 %
10677	AAD	IEEE 802.11ax (20MHz, MCS6, 90pc dc)	WLAN	8.73	± 9.6 %
10678	AAD	IEEE 802.11ax (20MHz, MCS7, 90pc dc)	WLAN	8.78	± 9.6 %
10679	AAD	IEEE 802.11ax (20MHz, MCS8, 90pc dc)	WLAN	8.89	± 9.6 %
10680	AAD	IEEE 802.11ax (20MHz, MCS9, 90pc dc)	WLAN	8.80	± 9.6 %
10681	AAG	IEEE 802.11ax (20MHz, MCS10, 90pc dc)	WLAN	8.62	± 9.6 %
10682	AAF	IEEE 802.11ax (20MHz, MCS11, 90pc dc)	WLAN	8.83	± 9.6 %
10683	AAA	IEEE 802.11ax (20MHz, MCS0, 99pc dc)	WLAN	8.42	± 9.6 %
10684	AAC	IEEE 802.11ax (20MHz, MCS1, 99pc dc)	WLAN	8.26	± 9.6 %
10685	AAC	IEEE 802.11ax (20MHz, MCS2, 99pc dc)	WLAN	8.33	± 9.6 %
10686	AAC	IEEE 802.11ax (20MHz, MCS3, 99pc dc)	WLAN	8.28	± 9.6 %
10687	AAE	IEEE 802.11ax (20MHz, MCS4, 99pc dc)	WLAN	8.45	± 9.6 %
10688	AAE	IEEE 802.11ax (20MHz, MCS5, 99pc dc)	WLAN	8.29	± 9.6 %
10689	AAD	IEEE 802.11ax (20MHz, MCS6, 99pc dc)	WLAN	8.55	± 9.6 %
10690	AAE	IEEE 802.11ax (20MHz, MCS7, 99pc dc)	WLAN	8.29	± 9.6 %
10691	AAB	IEEE 802.11ax (20MHz, MCS8, 99pc dc)	WLAN	8.25	± 9.6 %
10692	AAA	IEEE 802.11ax (20MHz, MCS9, 99pc dc)	WLAN	8.29	± 9.6 %
10693	AAA	IEEE 802.11ax (20MHz, MCS10, 99pc dc)	WLAN	8.25	± 9.6 %
10694	AAA	IEEE 802.11ax (20MHz, MCS11, 99pc dc)	WLAN	8.57	± 9.6 %
10695	AAA	IEEE 802.11ax (40MHz, MCS0, 90pc dc)	WLAN	8.78	± 9.6 %
10696	AAA	IEEE 802.11ax (40MHz, MCS1, 90pc dc)	WLAN	8.91	± 9.6 %
10697	AAA	IEEE 802.11ax (40MHz, MCS2, 90pc dc)	WLAN	8.61	± 9.6 %
10698	AAA	IEEE 802.11ax (40MHz, MCS3, 90pc dc)	WLAN	8.89	± 9.6 %
10699	AAA	IEEE 802.11ax (40MHz, MCS4, 90pc dc)	WLAN	8.82	± 9.6 %
10700	AAA	IEEE 802.11ax (40MHz, MCS5, 90pc dc)	WLAN	8.73	± 9.6 %
10701	AAA	IEEE 802.11ax (40MHz, MCS6, 90pc dc)	WLAN	8.86	± 9.6 %
10702	AAA	IEEE 802.11ax (40MHz, MCS7, 90pc dc)	WLAN	8.70	± 9.6 %
10703	AAA	IEEE 802.11ax (40MHz, MCS8, 90pc dc)	WLAN	8.82	± 9.6 %
10704	AAA	IEEE 802.11ax (40MHz, MCS9, 90pc dc)	WLAN	8.56	± 9.6 %
10705	AAA	IEEE 802.11ax (40MHz, MCS10, 90pc dc)	WLAN	8.69	± 9.6 %
10706	AAC	IEEE 802.11ax (40MHz, MCS11, 90pc dc)	WLAN	8.66	± 9.6 %
10707	AAC	IEEE 802.11ax (40MHz, MCS0, 99pc dc)	WLAN	8.32	± 9.6 %
10708	AAC	IEEE 802.11ax (40MHz, MCS1, 99pc dc)	WLAN	8.55	± 9.6 %
10709	AAC	IEEE 802.11ax (40MHz, MCS2, 99pc dc)	WLAN	8.33	± 9.6 %
10710	AAC	IEEE 802.11ax (40MHz, MCS3, 99pc dc)	WLAN	8.29	± 9.6 %
10711	AAC	IEEE 802.11ax (40MHz, MCS4, 99pc dc)	WLAN	8.39	± 9.6 %
10712	AAC	IEEE 802.11ax (40MHz, MCS5, 99pc dc)	WLAN	8.67	± 9.6 %
10713	AAC	IEEE 802.11ax (40MHz, MCS6, 99pc dc)	WLAN	8.33	± 9.6 %
10714	AAC	IEEE 802.11ax (40MHz, MCS7, 99pc dc)	WLAN	8.26	± 9.6 %
10715	AAC	IEEE 802.11ax (40MHz, MCS8, 99pc dc)	WLAN	8.45	± 9.6 %
10716	AAC	IEEE 802.11ax (40MHz, MCS9, 99pc dc)	WLAN	8.30	± 9.6 %
10717	AAC	IEEE 802.11ax (40MHz, MCS10, 99pc dc)	WLAN	8.48	± 9.6 %
10718	AAC	IEEE 802.11ax (40MHz, MCS11, 99pc dc)	WLAN	8.24	± 9.6 %
10719	AAC	IEEE 802.11ax (80MHz, MCS0, 90pc dc)	WLAN	8.81	± 9.6 %
10720	AAC	IEEE 802.11ax (80MHz, MCS1, 90pc dc)	WLAN	8.87	± 9.6 %
10721	AAC	IEEE 802.11ax (80MHz, MCS2, 90pc dc)	WLAN	8.76	± 9.6 %
10722	AAC	IEEE 802.11ax (80MHz, MCS3, 90pc dc)	WLAN	8.55	± 9.6 %
10723	AAC	IEEE 802.11ax (80MHz, MCS4, 90pc dc)	WLAN	8.70	± 9.6 %
10724	AAC	IEEE 802.11ax (80MHz, MCS5, 90pc dc)	WLAN	8.90	± 9.6 %
10725	AAC	IEEE 802.11ax (80MHz, MCS6, 90pc dc)	WLAN	8.74	± 9.6 %
10726	AAC	IEEE 802.11ax (80MHz, MCS7, 90pc dc)	WLAN	8.72	± 9.6 %
10727	AAC	IEEE 802.11ax (80MHz, MCS8, 90pc dc)	WLAN	8.66	± 9.6 %

UL Japan, Inc.
Ise EMC Lab.
4383-326 Asama-cho, Ise-shi, Mie-ken 516-0021 JAPAN
Telephone: +81 596 24 8999
Facsimile: +81 596 24 8124

EX3DV4– SN:3922 August 16, 2021

10728	AAC	IEEE 802.11ax (80MHz, MCS9, 90pc dc)	WLAN	8.65	± 9.6 %
10729	AAC	IEEE 802.11ax (80MHz, MCS10, 90pc dc)	WLAN	8.64	± 9.6 %
10730	AAC	IEEE 802.11ax (80MHz, MCS11, 90pc dc)	WLAN	8.67	± 9.6 %
10731	AAC	IEEE 802.11ax (80MHz, MCS0, 99pc dc)	WLAN	8.42	± 9.6 %
10732	AAC	IEEE 802.11ax (80MHz, MCS1, 99pc dc)	WLAN	8.46	± 9.6 %
10733	AAC	IEEE 802.11ax (80MHz, MCS2, 99pc dc)	WLAN	8.40	± 9.6 %
10734	AAC	IEEE 802.11ax (80MHz, MCS3, 99pc dc)	WLAN	8.25	± 9.6 %
10735	AAC	IEEE 802.11ax (80MHz, MCS4, 99pc dc)	WLAN	8.33	± 9.6 %
10736	AAC	IEEE 802.11ax (80MHz, MCS5, 99pc dc)	WLAN	8.27	± 9.6 %
10737	AAC	IEEE 802.11ax (80MHz, MCS6, 99pc dc)	WLAN	8.36	± 9.6 %
10738	AAC	IEEE 802.11ax (80MHz, MCS7, 99pc dc)	WLAN	8.42	± 9.6 %
10739	AAC	IEEE 802.11ax (80MHz, MCS8, 99pc dc)	WLAN	8.29	± 9.6 %
10740	AAC	IEEE 802.11ax (80MHz, MCS9, 99pc dc)	WLAN	8.48	± 9.6 %
10741	AAC	IEEE 802.11ax (80MHz, MCS10, 99pc dc)	WLAN	8.40	± 9.6 %
10742	AAC	IEEE 802.11ax (80MHz, MCS11, 99pc dc)	WLAN	8.43	± 9.6 %
10743	AAC	IEEE 802.11ax (160MHz, MCS0, 90pc dc)	WLAN	8.94	± 9.6 %
10744	AAC	IEEE 802.11ax (160MHz, MCS1, 90pc dc)	WLAN	9.16	± 9.6 %
10745	AAC	IEEE 802.11ax (160MHz, MCS2, 90pc dc)	WLAN	8.93	± 9.6 %
10746	AAC	IEEE 802.11ax (160MHz, MCS3, 90pc dc)	WLAN	9.11	± 9.6 %
10747	AAC	IEEE 802.11ax (160MHz, MCS4, 90pc dc)	WLAN	9.04	± 9.6 %
10748	AAC	IEEE 802.11ax (160MHz, MCS5, 90pc dc)	WLAN	8.93	± 9.6 %
10749	AAC	IEEE 802.11ax (160MHz, MCS6, 90pc dc)	WLAN	8.90	± 9.6 %
10750	AAC	IEEE 802.11ax (160MHz, MCS7, 90pc dc)	WLAN	8.79	± 9.6 %
10751	AAC	IEEE 802.11ax (160MHz, MCS8, 90pc dc)	WLAN	8.82	± 9.6 %
10752	AAC	IEEE 802.11ax (160MHz, MCS9, 90pc dc)	WLAN	8.81	± 9.6 %
10753	AAC	IEEE 802.11ax (160MHz, MCS10, 90pc dc)	WLAN	9.00	± 9.6 %
10754	AAC	IEEE 802.11ax (160MHz, MCS11, 90pc dc)	WLAN	8.94	± 9.6 %
10755	AAC	IEEE 802.11ax (160MHz, MCS0, 99pc dc)	WLAN	8.64	± 9.6 %
10756	AAC	IEEE 802.11ax (160MHz, MCS1, 99pc dc)	WLAN	8.77	± 9.6 %
10757	AAC	IEEE 802.11ax (160MHz, MCS2, 99pc dc)	WLAN	8.77	± 9.6 %
10758	AAC	IEEE 802.11ax (160MHz, MCS3, 99pc dc)	WLAN	8.69	± 9.6 %
10759	AAC	IEEE 802.11ax (160MHz, MCS4, 99pc dc)	WLAN	8.58	± 9.6 %
10760	AAC	IEEE 802.11ax (160MHz, MCS5, 99pc dc)	WLAN	8.49	± 9.6 %
10761	AAC	IEEE 802.11ax (160MHz, MCS6, 99pc dc)	WLAN	8.58	± 9.6 %
10762	AAC	IEEE 802.11ax (160MHz, MCS7, 99pc dc)	WLAN	8.49	± 9.6 %
10763	AAC	IEEE 802.11ax (160MHz, MCS8, 99pc dc)	WLAN	8.53	± 9.6 %
10764	AAC	IEEE 802.11ax (160MHz, MCS9, 99pc dc)	WLAN	8.54	± 9.6 %
10765	AAC	IEEE 802.11ax (160MHz, MCS10, 99pc dc)	WLAN	8.54	± 9.6 %
10766	AAC	IEEE 802.11ax (160MHz, MCS11, 99pc dc)	WLAN	8.51	± 9.6 %
10767	AAC	5G NR (CP-OFDM, 1 RB, 5 MHz, QPSK, 15 kHz)	5G NR FR1 TDD	7.99	± 9.6 %
10768	AAC	5G NR (CP-OFDM, 1 RB, 10 MHz, QPSK, 15 kHz)	5G NR FR1 TDD	8.01	± 9.6 %
10769	AAC	5G NR (CP-OFDM, 1 RB, 15 MHz, QPSK, 15 kHz)	5G NR FR1 TDD	8.01	± 9.6 %
10770	AAC	5G NR (CP-OFDM, 1 RB, 20 MHz, QPSK, 15 kHz)	5G NR FR1 TDD	8.02	± 9.6 %
10771	AAC	5G NR (CP-OFDM, 1 RB, 25 MHz, QPSK, 15 kHz)	5G NR FR1 TDD	8.02	± 9.6 %
10772	AAC	5G NR (CP-OFDM, 1 RB, 30 MHz, QPSK, 15 kHz)	5G NR FR1 TDD	8.23	± 9.6 %
10773	AAC	5G NR (CP-OFDM, 1 RB, 40 MHz, QPSK, 15 kHz)	5G NR FR1 TDD	8.03	± 9.6 %
10774	AAC	5G NR (CP-OFDM, 1 RB, 50 MHz, QPSK, 15 kHz)	5G NR FR1 TDD	8.02	± 9.6 %
10775	AAC	5G NR (CP-OFDM, 50% RB, 5 MHz, QPSK, 15 kHz)	5G NR FR1 TDD	8.31	± 9.6 %
10776	AAC	5G NR (CP-OFDM, 50% RB, 10 MHz, QPSK, 15 kHz)	5G NR FR1 TDD	8.30	± 9.6 %
10777	AAC	5G NR (CP-OFDM, 50% RB, 15 MHz, QPSK, 15 kHz)	5G NR FR1 TDD	8.30	± 9.6 %
10778	AAC	5G NR (CP-OFDM, 50% RB, 20 MHz, QPSK, 15 kHz)	5G NR FR1 TDD	8.34	± 9.6 %
10779	AAC	5G NR (CP-OFDM, 50% RB, 25 MHz, QPSK, 15 kHz)	5G NR FR1 TDD	8.42	± 9.6 %
10780	AAC	5G NR (CP-OFDM, 50% RB, 30 MHz, QPSK, 15 kHz)	5G NR FR1 TDD	8.38	± 9.6 %
10781	AAC	5G NR (CP-OFDM, 50% RB, 40 MHz, QPSK, 15 kHz)	5G NR FR1 TDD	8.38	± 9.6 %
10782	AAC	5G NR (CP-OFDM, 50% RB, 50 MHz, QPSK, 15 kHz)	5G NR FR1 TDD	8.43	± 9.6 %
10783	AAC	5G NR (CP-OFDM, 100% RB, 5 MHz, QPSK, 15 kHz)	5G NR FR1 TDD	8.31	± 9.6 %

UL Japan, Inc.
Ise EMC Lab.
4383-326 Asama-cho, Ise-shi, Mie-ken 516-0021 JAPAN
Telephone: +81 596 24 8999
Facsimile: +81 596 24 8124

EX3DV4– SN:3922 August 16, 2021

10784	AAC	5G NR (CP-OFDM, 100% RB, 10 MHz, QPSK, 15 kHz)	5G NR FR1 TDD	8.29	± 9.6 %
10785	AAC	5G NR (CP-OFDM, 100% RB, 15 MHz, QPSK, 15 kHz)	5G NR FR1 TDD	8.40	± 9.6 %
10786	AAC	5G NR (CP-OFDM, 100% RB, 20 MHz, QPSK, 15 kHz)	5G NR FR1 TDD	8.35	± 9.6 %
10787	AAC	5G NR (CP-OFDM, 100% RB, 25 MHz, QPSK, 15 kHz)	5G NR FR1 TDD	8.44	± 9.6 %
10788	AAC	5G NR (CP-OFDM, 100% RB, 30 MHz, QPSK, 15 kHz)	5G NR FR1 TDD	8.39	± 9.6 %
10789	AAC	5G NR (CP-OFDM, 100% RB, 40 MHz, QPSK, 15 kHz)	5G NR FR1 TDD	8.37	± 9.6 %
10790	AAC	5G NR (CP-OFDM, 100% RB, 50 MHz, QPSK, 15 kHz)	5G NR FR1 TDD	8.39	± 9.6 %
10791	AAC	5G NR (CP-OFDM, 1 RB, 5 MHz, QPSK, 30 kHz)	5G NR FR1 TDD	7.83	± 9.6 %
10792	AAC	5G NR (CP-OFDM, 1 RB, 10 MHz, QPSK, 30 kHz)	5G NR FR1 TDD	7.92	± 9.6 %
10793	AAC	5G NR (CP-OFDM, 1 RB, 15 MHz, QPSK, 30 kHz)	5G NR FR1 TDD	7.95	± 9.6 %
10794	AAC	5G NR (CP-OFDM, 1 RB, 20 MHz, QPSK, 30 kHz)	5G NR FR1 TDD	7.82	± 9.6 %
10795	AAC	5G NR (CP-OFDM, 1 RB, 25 MHz, QPSK, 30 kHz)	5G NR FR1 TDD	7.84	± 9.6 %
10796	AAC	5G NR (CP-OFDM, 1 RB, 30 MHz, QPSK, 30 kHz)	5G NR FR1 TDD	7.82	± 9.6 %
10797	AAC	5G NR (CP-OFDM, 1 RB, 40 MHz, QPSK, 30 kHz)	5G NR FR1 TDD	8.01	± 9.6 %
10798	AAC	5G NR (CP-OFDM, 1 RB, 50 MHz, QPSK, 30 kHz)	5G NR FR1 TDD	7.89	± 9.6 %
10799	AAC	5G NR (CP-OFDM, 1 RB, 60 MHz, QPSK, 30 kHz)	5G NR FR1 TDD	7.93	± 9.6 %
10801	AAC	5G NR (CP-OFDM, 1 RB, 80 MHz, QPSK, 30 kHz)	5G NR FR1 TDD	7.89	± 9.6 %
10802	AAC	5G NR (CP-OFDM, 1 RB, 90 MHz, QPSK, 30 kHz)	5G NR FR1 TDD	7.87	± 9.6 %
10803	AAE	5G NR (CP-OFDM, 1 RB, 100 MHz, QPSK, 30 kHz)	5G NR FR1 TDD	7.93	± 9.6 %
10805	AAD	5G NR (CP-OFDM, 50% RB, 10 MHz, QPSK, 30 kHz)	5G NR FR1 TDD	8.34	± 9.6 %
10806	AAD	5G NR (CP-OFDM, 50% RB, 15 MHz, QPSK, 30 kHz)	5G NR FR1 TDD	8.37	± 9.6 %
10809	AAD	5G NR (CP-OFDM, 50% RB, 30 MHz, QPSK, 30 kHz)	5G NR FR1 TDD	8.34	± 9.6 %
10810	AAD	5G NR (CP-OFDM, 50% RB, 40 MHz, QPSK, 30 kHz)	5G NR FR1 TDD	8.34	± 9.6 %
10812	AAD	5G NR (CP-OFDM, 50% RB, 60 MHz, QPSK, 30 kHz)	5G NR FR1 TDD	8.35	± 9.6 %
10817	AAD	5G NR (CP-OFDM, 100% RB, 5 MHz, QPSK, 30 kHz)	5G NR FR1 TDD	8.35	± 9.6 %
10818	AAD	5G NR (CP-OFDM, 100% RB, 10 MHz, QPSK, 30 kHz)	5G NR FR1 TDD	8.34	± 9.6 %
10819	AAD	5G NR (CP-OFDM, 100% RB, 15 MHz, QPSK, 30 kHz)	5G NR FR1 TDD	8.33	± 9.6 %
10820	AAD	5G NR (CP-OFDM, 100% RB, 20 MHz, QPSK, 30 kHz)	5G NR FR1 TDD	8.30	± 9.6 %
10821	AAC	5G NR (CP-OFDM, 100% RB, 25 MHz, QPSK, 30 kHz)	5G NR FR1 TDD	8.41	± 9.6 %
10822	AAD	5G NR (CP-OFDM, 100% RB, 30 MHz, QPSK, 30 kHz)	5G NR FR1 TDD	8.41	± 9.6 %
10823	AAC	5G NR (CP-OFDM, 100% RB, 40 MHz, QPSK, 30 kHz)	5G NR FR1 TDD	8.36	± 9.6 %
10824	AAD	5G NR (CP-OFDM, 100% RB, 50 MHz, QPSK, 30 kHz)	5G NR FR1 TDD	8.39	± 9.6 %
10825	AAD	5G NR (CP-OFDM, 100% RB, 60 MHz, QPSK, 30 kHz)	5G NR FR1 TDD	8.41	± 9.6 %
10827	AAD	5G NR (CP-OFDM, 100% RB, 80 MHz, QPSK, 30 kHz)	5G NR FR1 TDD	8.42	± 9.6 %
10828	AAE	5G NR (CP-OFDM, 100% RB, 90 MHz, QPSK, 30 kHz)	5G NR FR1 TDD	8.43	± 9.6 %
10829	AAD	5G NR (CP-OFDM, 100% RB, 100 MHz, QPSK, 30 kHz)	5G NR FR1 TDD	8.40	± 9.6 %
10830	AAD	5G NR (CP-OFDM, 1 RB, 10 MHz, QPSK, 60 kHz)	5G NR FR1 TDD	7.63	± 9.6 %
10831	AAD	5G NR (CP-OFDM, 1 RB, 15 MHz, QPSK, 60 kHz)	5G NR FR1 TDD	7.73	± 9.6 %
10832	AAD	5G NR (CP-OFDM, 1 RB, 20 MHz, QPSK, 60 kHz)	5G NR FR1 TDD	7.74	± 9.6 %
10833	AAD	5G NR (CP-OFDM, 1 RB, 25 MHz, QPSK, 60 kHz)	5G NR FR1 TDD	7.70	± 9.6 %
10834	AAD	5G NR (CP-OFDM, 1 RB, 30 MHz, QPSK, 60 kHz)	5G NR FR1 TDD	7.75	± 9.6 %
10835	AAD	5G NR (CP-OFDM, 1 RB, 40 MHz, QPSK, 60 kHz)	5G NR FR1 TDD	7.70	± 9.6 %
10836	AAE	5G NR (CP-OFDM, 1 RB, 50 MHz, QPSK, 60 kHz)	5G NR FR1 TDD	7.66	± 9.6 %
10837	AAD	5G NR (CP-OFDM, 1 RB, 60 MHz, QPSK, 60 kHz)	5G NR FR1 TDD	7.68	± 9.6 %
10839	AAD	5G NR (CP-OFDM, 1 RB, 80 MHz, QPSK, 60 kHz)	5G NR FR1 TDD	7.70	± 9.6 %
10840	AAD	5G NR (CP-OFDM, 1 RB, 90 MHz, QPSK, 60 kHz)	5G NR FR1 TDD	7.67	± 9.6 %
10841	AAD	5G NR (CP-OFDM, 1 RB, 100 MHz, QPSK, 60 kHz)	5G NR FR1 TDD	7.71	± 9.6 %
10843	AAD	5G NR (CP-OFDM, 50% RB, 15 MHz, QPSK, 60 kHz)	5G NR FR1 TDD	8.49	± 9.6 %
10844	AAD	5G NR (CP-OFDM, 50% RB, 20 MHz, QPSK, 60 kHz)	5G NR FR1 TDD	8.34	± 9.6 %
10846	AAD	5G NR (CP-OFDM, 50% RB, 30 MHz, QPSK, 60 kHz)	5G NR FR1 TDD	8.41	± 9.6 %
10854	AAD	5G NR (CP-OFDM, 100% RB, 10 MHz, QPSK, 60 kHz)	5G NR FR1 TDD	8.34	± 9.6 %
10855	AAD	5G NR (CP-OFDM, 100% RB, 15 MHz, QPSK, 60 kHz)	5G NR FR1 TDD	8.36	± 9.6 %
10856	AAD	5G NR (CP-OFDM, 100% RB, 20 MHz, QPSK, 60 kHz)	5G NR FR1 TDD	8.37	± 9.6 %
10857	AAD	5G NR (CP-OFDM, 100% RB, 25 MHz, QPSK, 60 kHz)	5G NR FR1 TDD	8.35	± 9.6 %
10858	AAD	5G NR (CP-OFDM, 100% RB, 30 MHz, QPSK, 60 kHz)	5G NR FR1 TDD	8.36	± 9.6 %
10859	AAD	5G NR (CP-OFDM, 100% RB, 40 MHz, QPSK, 60 kHz)	5G NR FR1 TDD	8.34	± 9.6 %

UL Japan, Inc.
Ise EMC Lab.
4383-326 Asama-cho, Ise-shi, Mie-ken 516-0021 JAPAN
Telephone: +81 596 24 8999
Facsimile: +81 596 24 8124

EX3DV4– SN:3922 August 16, 2021

10860	AAD	5G NR (CP-OFDM, 100% RB, 50 MHz, QPSK, 60 kHz)	5G NR FR1 TDD	8.41	± 9.6 %
10861	AAD	5G NR (CP-OFDM, 100% RB, 60 MHz, QPSK, 60 kHz)	5G NR FR1 TDD	8.40	± 9.6 %
10863	AAD	5G NR (CP-OFDM, 100% RB, 80 MHz, QPSK, 60 kHz)	5G NR FR1 TDD	8.41	± 9.6 %
10864	AAE	5G NR (CP-OFDM, 100% RB, 90 MHz, QPSK, 60 kHz)	5G NR FR1 TDD	8.37	± 9.6 %
10865	AAD	5G NR (CP-OFDM, 100% RB, 100 MHz, QPSK, 60 kHz)	5G NR FR1 TDD	8.41	± 9.6 %
10866	AAD	5G NR (DFT-s-OFDM, 1 RB, 100 MHz, QPSK, 30 kHz)	5G NR FR1 TDD	5.68	± 9.6 %
10868	AAD	5G NR (DFT-s-OFDM, 100% RB, 100 MHz, QPSK, 30 kHz)	5G NR FR1 TDD	5.89	± 9.6 %
10869	AAD	5G NR (DFT-s-OFDM, 1 RB, 100 MHz, QPSK, 120 kHz)	5G NR FR2 TDD	5.75	± 9.6 %
10870	AAD	5G NR (DFT-s-OFDM, 100% RB, 100 MHz, QPSK, 120 kHz)	5G NR FR2 TDD	5.86	± 9.6 %
10871	AAD	5G NR (DFT-s-OFDM, 1 RB, 100 MHz, 16QAM, 120 kHz)	5G NR FR2 TDD	5.75	± 9.6 %
10872	AAD	5G NR (DFT-s-OFDM, 100% RB, 100 MHz, 16QAM, 120 kHz)	5G NR FR2 TDD	6.52	± 9.6 %
10873	AAD	5G NR (DFT-s-OFDM, 1 RB, 100 MHz, 64QAM, 120 kHz)	5G NR FR2 TDD	6.61	± 9.6 %
10874	AAD	5G NR (DFT-s-OFDM, 100% RB, 100 MHz, 64QAM, 120 kHz)	5G NR FR2 TDD	6.65	± 9.6 %
10875	AAD	5G NR (CP-OFDM, 1 RB, 100 MHz, QPSK, 120 kHz)	5G NR FR2 TDD	7.78	± 9.6 %
10876	AAD	5G NR (CP-OFDM, 100% RB, 100 MHz, QPSK, 120 kHz)	5G NR FR2 TDD	8.39	± 9.6 %
10877	AAD	5G NR (CP-OFDM, 1 RB, 100 MHz, 16QAM, 120 kHz)	5G NR FR2 TDD	7.95	± 9.6 %
10878	AAD	5G NR (CP-OFDM, 100% RB, 100 MHz, 16QAM, 120 kHz)	5G NR FR2 TDD	8.41	± 9.6 %
10879	AAD	5G NR (CP-OFDM, 1 RB, 100 MHz, 64QAM, 120 kHz)	5G NR FR2 TDD	8.12	± 9.6 %
10880	AAD	5G NR (CP-OFDM, 100% RB, 100 MHz, 64QAM, 120 kHz)	5G NR FR2 TDD	8.38	± 9.6 %
10881	AAD	5G NR (DFT-s-OFDM, 1 RB, 50 MHz, QPSK, 120 kHz)	5G NR FR2 TDD	5.75	± 9.6 %
10882	AAD	5G NR (DFT-s-OFDM, 100% RB, 50 MHz, QPSK, 120 kHz)	5G NR FR2 TDD	5.96	± 9.6 %
10883	AAD	5G NR (DFT-s-OFDM, 1 RB, 50 MHz, 16QAM, 120 kHz)	5G NR FR2 TDD	6.57	± 9.6 %
10884	AAD	5G NR (DFT-s-OFDM, 100% RB, 50 MHz, 16QAM, 120 kHz)	5G NR FR2 TDD	6.53	± 9.6 %
10885	AAD	5G NR (DFT-s-OFDM, 1 RB, 50 MHz, 64QAM, 120 kHz)	5G NR FR2 TDD	6.61	± 9.6 %
10886	AAD	5G NR (DFT-s-OFDM, 100% RB, 50 MHz, 64QAM, 120 kHz)	5G NR FR2 TDD	6.65	± 9.6 %
10887	AAD	5G NR (CP-OFDM, 1 RB, 50 MHz, QPSK, 120 kHz)	5G NR FR2 TDD	7.78	± 9.6 %
10888	AAD	5G NR (CP-OFDM, 100% RB, 50 MHz, QPSK, 120 kHz)	5G NR FR2 TDD	8.35	± 9.6 %
10889	AAD	5G NR (CP-OFDM, 1 RB, 50 MHz, 16QAM, 120 kHz)	5G NR FR2 TDD	8.02	± 9.6 %
10890	AAD	5G NR (CP-OFDM, 100% RB, 50 MHz, 16QAM, 120 kHz)	5G NR FR2 TDD	8.40	± 9.6 %
10891	AAD	5G NR (CP-OFDM, 1 RB, 50 MHz, 64QAM, 120 kHz)	5G NR FR2 TDD	8.13	± 9.6 %
10892	AAD	5G NR (CP-OFDM, 100% RB, 50 MHz, 64QAM, 120 kHz)	5G NR FR2 TDD	8.41	± 9.6 %
10897	AAD	5G NR (DFT-s-OFDM, 1 RB, 5 MHz, QPSK, 30 kHz)	5G NR FR1 TDD	5.66	± 9.6 %
10898	AAD	5G NR (DFT-s-OFDM, 1 RB, 10 MHz, QPSK, 30 kHz)	5G NR FR1 TDD	5.67	± 9.6 %
10899	AAD	5G NR (DFT-s-OFDM, 1 RB, 15 MHz, QPSK, 30 kHz)	5G NR FR1 TDD	5.67	± 9.6 %
10900	AAD	5G NR (DFT-s-OFDM, 1 RB, 20 MHz, QPSK, 30 kHz)	5G NR FR1 TDD	5.68	± 9.6 %
10901	AAD	5G NR (DFT-s-OFDM, 1 RB, 25 MHz, QPSK, 30 kHz)	5G NR FR1 TDD	5.68	± 9.6 %
10902	AAD	5G NR (DFT-s-OFDM, 1 RB, 30 MHz, QPSK, 30 kHz)	5G NR FR1 TDD	5.68	± 9.6 %
10903	AAD	5G NR (DFT-s-OFDM, 1 RB, 40 MHz, QPSK, 30 kHz)	5G NR FR1 TDD	5.68	± 9.6 %
10904	AAD	5G NR (DFT-s-OFDM, 1 RB, 50 MHz, QPSK, 30 kHz)	5G NR FR1 TDD	5.68	± 9.6 %
10905	AAD	5G NR (DFT-s-OFDM, 1 RB, 60 MHz, QPSK, 30 kHz)	5G NR FR1 TDD	5.68	± 9.6 %
10906	AAD	5G NR (DFT-s-OFDM, 1 RB, 80 MHz, QPSK, 30 kHz)	5G NR FR1 TDD	5.68	± 9.6 %
10907	AAD	5G NR (DFT-s-OFDM, 50% RB, 5 MHz, QPSK, 30 kHz)	5G NR FR1 TDD	5.78	± 9.6 %
10908	AAD	5G NR (DFT-s-OFDM, 50% RB, 10 MHz, QPSK, 30 kHz)	5G NR FR1 TDD	5.93	± 9.6 %
10909	AAD	5G NR (DFT-s-OFDM, 50% RB, 15 MHz, QPSK, 30 kHz)	5G NR FR1 TDD	5.96	± 9.6 %
10910	AAD	5G NR (DFT-s-OFDM, 50% RB, 20 MHz, QPSK, 30 kHz)	5G NR FR1 TDD	5.83	± 9.6 %
10911	AAD	5G NR (DFT-s-OFDM, 50% RB, 25 MHz, QPSK, 30 kHz)	5G NR FR1 TDD	5.93	± 9.6 %
10912	AAD	5G NR (DFT-s-OFDM, 50% RB, 30 MHz, QPSK, 30 kHz)	5G NR FR1 TDD	5.84	± 9.6 %
10913	AAD	5G NR (DFT-s-OFDM, 50% RB, 40 MHz, QPSK, 30 kHz)	5G NR FR1 TDD	5.84	± 9.6 %
10914	AAD	5G NR (DFT-s-OFDM, 50% RB, 50 MHz, QPSK, 30 kHz)	5G NR FR1 TDD	5.85	± 9.6 %
10915	AAD	5G NR (DFT-s-OFDM, 50% RB, 60 MHz, QPSK, 30 kHz)	5G NR FR1 TDD	5.83	± 9.6 %
10916	AAD	5G NR (DFT-s-OFDM, 50% RB, 80 MHz, QPSK, 30 kHz)	5G NR FR1 TDD	5.87	± 9.6 %
10917	AAD	5G NR (DFT-s-OFDM, 50% RB, 100 MHz, QPSK, 30 kHz)	5G NR FR1 TDD	5.94	± 9.6 %
10918	AAD	5G NR (DFT-s-OFDM, 100% RB, 5 MHz, QPSK, 30 kHz)	5G NR FR1 TDD	5.86	± 9.6 %
10919	AAD	5G NR (DFT-s-OFDM, 100% RB, 10 MHz, QPSK, 30 kHz)	5G NR FR1 TDD	5.86	± 9.6 %
10920	AAD	5G NR (DFT-s-OFDM, 100% RB, 15 MHz, QPSK, 30 kHz)	5G NR FR1 TDD	5.87	± 9.6 %
10921	AAD	5G NR (DFT-s-OFDM, 100% RB, 20 MHz, QPSK, 30 kHz)	5G NR FR1 TDD	5.84	± 9.6 %

UL Japan, Inc.
Ise EMC Lab.
4383-326 Asama-cho, Ise-shi, Mie-ken 516-0021 JAPAN
Telephone: +81 596 24 8999
Facsimile: +81 596 24 8124

EX3DV4– SN:3922 August 16, 2021

10922	AAD	5G NR (DFT-s-OFDM, 100% RB, 25 MHz, QPSK, 30 kHz)	5G NR FR1 TDD	5.82	± 9.6 %
10923	AAD	5G NR (DFT-s-OFDM, 100% RB, 30 MHz, QPSK, 30 kHz)	5G NR FR1 TDD	5.84	± 9.6 %
10924	AAD	5G NR (DFT-s-OFDM, 100% RB, 40 MHz, QPSK, 30 kHz)	5G NR FR1 TDD	5.84	± 9.6 %
10925	AAD	5G NR (DFT-s-OFDM, 100% RB, 50 MHz, QPSK, 30 kHz)	5G NR FR1 TDD	5.95	± 9.6 %
10926	AAD	5G NR (DFT-s-OFDM, 100% RB, 60 MHz, QPSK, 30 kHz)	5G NR FR1 TDD	5.84	± 9.6 %
10927	AAD	5G NR (DFT-s-OFDM, 100% RB, 80 MHz, QPSK, 30 kHz)	5G NR FR1 TDD	5.94	± 9.6 %
10928	AAD	5G NR (DFT-s-OFDM, 1 RB, 5 MHz, QPSK, 15 kHz)	5G NR FR1 FDD	5.52	± 9.6 %
10929	AAD	5G NR (DFT-s-OFDM, 1 RB, 10 MHz, QPSK, 15 kHz)	5G NR FR1 FDD	5.52	± 9.6 %
10930	AAD	5G NR (DFT-s-OFDM, 1 RB, 15 MHz, QPSK, 15 kHz)	5G NR FR1 FDD	5.52	± 9.6 %
10931	AAD	5G NR (DFT-s-OFDM, 1 RB, 20 MHz, QPSK, 15 kHz)	5G NR FR1 FDD	5.51	± 9.6 %
10932	AAB	5G NR (DFT-s-OFDM, 1 RB, 25 MHz, QPSK, 15 kHz)	5G NR FR1 FDD	5.51	± 9.6 %
10933	AAA	5G NR (DFT-s-OFDM, 1 RB, 30 MHz, QPSK, 15 kHz)	5G NR FR1 FDD	5.51	± 9.6 %
10934	AAA	5G NR (DFT-s-OFDM, 1 RB, 40 MHz, QPSK, 15 kHz)	5G NR FR1 FDD	5.51	± 9.6 %
10935	AAA	5G NR (DFT-s-OFDM, 1 RB, 50 MHz, QPSK, 15 kHz)	5G NR FR1 FDD	5.51	± 9.6 %
10936	AAC	5G NR (DFT-s-OFDM, 50% RB, 5 MHz, QPSK, 15 kHz)	5G NR FR1 FDD	5.90	± 9.6 %
10937	AAB	5G NR (DFT-s-OFDM, 50% RB, 10 MHz, QPSK, 15 kHz)	5G NR FR1 FDD	5.77	± 9.6 %
10938	AAB	5G NR (DFT-s-OFDM, 50% RB, 15 MHz, QPSK, 15 kHz)	5G NR FR1 FDD	5.90	± 9.6 %
10939	AAB	5G NR (DFT-s-OFDM, 50% RB, 20 MHz, QPSK, 15 kHz)	5G NR FR1 FDD	5.82	± 9.6 %
10940	AAB	5G NR (DFT-s-OFDM, 50% RB, 25 MHz, QPSK, 15 kHz)	5G NR FR1 FDD	5.89	± 9.6 %
10941	AAB	5G NR (DFT-s-OFDM, 50% RB, 30 MHz, QPSK, 15 kHz)	5G NR FR1 FDD	5.83	± 9.6 %
10942	AAB	5G NR (DFT-s-OFDM, 50% RB, 40 MHz, QPSK, 15 kHz)	5G NR FR1 FDD	5.85	± 9.6 %
10943	AAB	5G NR (DFT-s-OFDM, 50% RB, 50 MHz, QPSK, 15 kHz)	5G NR FR1 FDD	5.95	± 9.6 %
10944	AAB	5G NR (DFT-s-OFDM, 100% RB, 5 MHz, QPSK, 15 kHz)	5G NR FR1 FDD	5.81	± 9.6 %
10945	AAB	5G NR (DFT-s-OFDM, 100% RB, 10 MHz, QPSK, 15 kHz)	5G NR FR1 FDD	5.85	± 9.6 %
10946	AAC	5G NR (DFT-s-OFDM, 100% RB, 15 MHz, QPSK, 15 kHz)	5G NR FR1 FDD	5.83	± 9.6 %
10947	AAB	5G NR (DFT-s-OFDM, 100% RB, 20 MHz, QPSK, 15 kHz)	5G NR FR1 FDD	5.87	± 9.6 %
10948	AAB	5G NR (DFT-s-OFDM, 100% RB, 25 MHz, QPSK, 15 kHz)	5G NR FR1 FDD	5.94	± 9.6 %
10949	AAB	5G NR (DFT-s-OFDM, 100% RB, 30 MHz, QPSK, 15 kHz)	5G NR FR1 FDD	5.87	± 9.6 %
10950	AAB	5G NR (DFT-s-OFDM, 100% RB, 40 MHz, QPSK, 15 kHz)	5G NR FR1 FDD	5.94	± 9.6 %
10951	AAB	5G NR (DFT-s-OFDM, 100% RB, 50 MHz, QPSK, 15 kHz)	5G NR FR1 FDD	5.92	± 9.6 %
10952	AAB	5G NR DL (CP-OFDM, TM 3.1, 5 MHz, 64-QAM, 15 kHz)	5G NR FR1 FDD	8.25	± 9.6 %
10953	AAB	5G NR DL (CP-OFDM, TM 3.1, 10 MHz, 64-QAM, 15 kHz)	5G NR FR1 FDD	8.15	± 9.6 %
10954	AAB	5G NR DL (CP-OFDM, TM 3.1, 15 MHz, 64-QAM, 15 kHz)	5G NR FR1 FDD	8.23	± 9.6 %
10955	AAB	5G NR DL (CP-OFDM, TM 3.1, 20 MHz, 64-QAM, 15 kHz)	5G NR FR1 FDD	8.42	± 9.6 %
10956	AAB	5G NR DL (CP-OFDM, TM 3.1, 5 MHz, 64-QAM, 30 kHz)	5G NR FR1 FDD	8.14	± 9.6 %
10957	AAC	5G NR DL (CP-OFDM, TM 3.1, 10 MHz, 64-QAM, 30 kHz)	5G NR FR1 FDD	8.31	± 9.6 %
10958	AAB	5G NR DL (CP-OFDM, TM 3.1, 15 MHz, 64-QAM, 30 kHz)	5G NR FR1 FDD	8.61	± 9.6 %
10959	AAB	5G NR DL (CP-OFDM, TM 3.1, 20 MHz, 64-QAM, 30 kHz)	5G NR FR1 FDD	8.33	± 9.6 %
10960	AAB	5G NR DL (CP-OFDM, TM 3.1, 5 MHz, 64-QAM, 15 kHz)	5G NR FR1 TDD	9.32	± 9.6 %
10961	AAB	5G NR DL (CP-OFDM, TM 3.1, 10 MHz, 64-QAM, 15 kHz)	5G NR FR1 TDD	9.36	± 9.6 %
10962	AAB	5G NR DL (CP-OFDM, TM 3.1, 15 MHz, 64-QAM, 15 kHz)	5G NR FR1 TDD	9.40	± 9.6 %
10963	AAB	5G NR DL (CP-OFDM, TM 3.1, 20 MHz, 64-QAM, 15 kHz)	5G NR FR1 TDD	9.55	± 9.6 %
10964	AAB	5G NR DL (CP-OFDM, TM 3.1, 5 MHz, 64-QAM, 30 kHz)	5G NR FR1 TDD	9.29	± 9.6 %
10965	AAB	5G NR DL (CP-OFDM, TM 3.1, 10 MHz, 64-QAM, 30 kHz)	5G NR FR1 TDD	9.37	± 9.6 %
10966	AAB	5G NR DL (CP-OFDM, TM 3.1, 15 MHz, 64-QAM, 30 kHz)	5G NR FR1 TDD	9.55	± 9.6 %
10967	AAB	5G NR DL (CP-OFDM, TM 3.1, 20 MHz, 64-QAM, 30 kHz)	5G NR FR1 TDD	9.42	± 9.6 %
10968	AAB	5G NR DL (CP-OFDM, TM 3.1, 100 MHz, 64-QAM, 30 kHz)	5G NR FR1 TDD	9.49	± 9.6 %
10972	AAB	5G NR (CP-OFDM, 1 RB, 20 MHz, QPSK, 15 kHz)	5G NR FR1 TDD	11.59	± 9.6 %
10973	AAB	5G NR (DFT-s-OFDM, 1 RB, 100 MHz, QPSK, 30 kHz)	5G NR FR1 TDD	9.06	± 9.6 %
10974	AAB	5G NR (CP-OFDM, 100% RB, 100 MHz, 256-QAM, 30 kHz)	5G NR FR1 TDD	10.28	± 9.6 %

[E] Uncertainty is determined using the max. deviation from linear response applying rectangular distribution and is expressed for the square of the field value.

UL Japan, Inc.
Ise EMC Lab.
4383-326 Asama-cho, Ise-shi, Mie-ken 516-0021 JAPAN
Telephone: +81 596 24 8999
Facsimile: +81 596 24 8124

System Check Dipole SAR Calibration Certificate -Dipole 2450 MHz (D2450V2 S/N: 713)

Calibration Laboratory of
Schmid & Partner
Engineering AG
Zeughausstrasse 43, 8004 Zurich, Switzerland

S Schweizerischer Kalibrierdienst
C Service suisse d'étalonnage
Servizio svizzero di taratura
S Swiss Calibration Service

Accredited by the Swiss Accreditation Service (SAS)
The Swiss Accreditation Service is one of the signatories to the EA Multilateral Agreement for the recognition of calibration certificates

Accreditation No.: SCS 0108

Client UL Japan (KYCOM)

Certificate No: D2450V2-713_Sep19

CALIBRATION CERTIFICATE

Object	D2450V2 - SN:713
Calibration procedure(s)	QA CAL-05.v11 Calibration Procedure for SAR Validation Sources between 0.7-3 GHz
Calibration date:	September 09, 2019

This calibration certificate documents the traceability to national standards, which realize the physical units of measurements (SI).
The measurements and the uncertainties with confidence probability are given on the following pages and are part of the certificate.

All calibrations have been conducted in the closed laboratory facility: environment temperature (22 ± 3)°C and humidity < 70%.

Calibration Equipment used (M&TE critical for calibration)

Primary Standards	ID #	Cal Date (Certificate No.)	Scheduled Calibration
Power meter NRP	SN: 104778	03-Apr-19 (No. 217-02892/02893)	Apr-20
Power sensor NRP-Z91	SN: 103244	03-Apr-19 (No. 217-02892)	Apr-20
Power sensor NRP-Z91	SN: 103245	03-Apr-19 (No. 217-02893)	Apr-20
Reference 20 dB Attenuator	SN: 5058 (20k)	04-Apr-19 (No. 217-02894)	Apr-20
Type-N mismatch combination	SN: 5047.2 / 06327	04-Apr-19 (No. 217-02895)	Apr-20
Reference Probe EX3DV4	SN: 7349	29-May-19 (No. EX3-7349_May19)	May-20
DAE4	SN: 601	30-Apr-19 (No. DAE4-601_Apr19)	Apr-20

Secondary Standards	ID #	Check Date (in house)	Scheduled Check
Power meter E4419B	SN: GB39512475	30-Oct-14 (in house check Feb-19)	In house check: Oct-20
Power sensor HP 8481A	SN: US37292783	07-Oct-15 (in house check Oct-18)	In house check: Oct-20
Power sensor HP 8481A	SN: MY41092317	07-Oct-15 (in house check Oct-18)	In house check: Oct-20
RF generator R&S SMT-06	SN: 100972	15-Jun-15 (in house check Oct-18)	In house check: Oct-20
Network Analyzer Agilent E8358A	SN: US41080477	31-Mar-14 (in house check Oct-18)	In house check: Oct-19

	Name	Function	Signature
Calibrated by:	Leif Klysner	Laboratory Technician	
Approved by:	Katja Pokovic	Technical Manager	

Issued: September 13, 2019

This calibration certificate shall not be reproduced except in full without written approval of the laboratory.

Calibration Laboratory of
Schmid & Partner
Engineering AG
Zeughausstrasse 43, 8004 Zurich, Switzerland

S Schweizerischer Kalibrierdienst
C Service suisse d'étalonnage
Servizio svizzero di taratura
S Swiss Calibration Service

Accredited by the Swiss Accreditation Service (SAS)
The Swiss Accreditation Service is one of the signatories to the EA Multilateral Agreement for the recognition of calibration certificates

Accreditation No.: SCS 0108

Glossary:

TSL	tissue simulating liquid
ConvF	sensitivity in TSL / NORM x,y,z
N/A	not applicable or not measured

Calibration is Performed According to the Following Standards:

a) IEEE Std 1528-2013, "IEEE Recommended Practice for Determining the Peak Spatial-Averaged Specific Absorption Rate (SAR) in the Human Head from Wireless Communications Devices: Measurement Techniques", June 2013
b) IEC 62209-1, "Measurement procedure for the assessment of Specific Absorption Rate (SAR) from hand-held and body-mounted devices used next to the ear (frequency range of 300 MHz to 6 GHz)", July 2016
c) IEC 62209-2, "Procedure to determine the Specific Absorption Rate (SAR) for wireless communication devices used in close proximity to the human body (frequency range of 30 MHz to 6 GHz)", March 2010
d) KDB 865664, "SAR Measurement Requirements for 100 MHz to 6 GHz"

Additional Documentation:

e) DASY4/5 System Handbook

Methods Applied and Interpretation of Parameters:

- *Measurement Conditions:* Further details are available from the Validation Report at the end of the certificate. All figures stated in the certificate are valid at the frequency indicated.
- *Antenna Parameters with TSL:* The dipole is mounted with the spacer to position its feed point exactly below the center marking of the flat phantom section, with the arms oriented parallel to the body axis.
- *Feed Point Impedance and Return Loss:* These parameters are measured with the dipole positioned under the liquid filled phantom. The impedance stated is transformed from the measurement at the SMA connector to the feed point. The Return Loss ensures low reflected power. No uncertainty required.
- *Electrical Delay:* One-way delay between the SMA connector and the antenna feed point. No uncertainty required.
- *SAR measured:* SAR measured at the stated antenna input power.
- *SAR normalized:* SAR as measured, normalized to an input power of 1 W at the antenna connector.
- *SAR for nominal TSL parameters:* The measured TSL parameters are used to calculate the nominal SAR result.

The reported uncertainty of measurement is stated as the standard uncertainty of measurement multiplied by the coverage factor k=2, which for a normal distribution corresponds to a coverage probability of approximately 95%.

Measurement Conditions

DASY system configuration, as far as not given on page 1.

DASY Version	DASY5	V52.10.2
Extrapolation	Advanced Extrapolation	
Phantom	Modular Flat Phantom	
Distance Dipole Center - TSL	10 mm	with Spacer
Zoom Scan Resolution	dx, dy, dz = 5 mm	
Frequency	2450 MHz ± 1 MHz	

Head TSL parameters

The following parameters and calculations were applied.

	Temperature	**Permittivity**	**Conductivity**
Nominal Head TSL parameters	22.0 °C	39.2	1.80 mho/m
Measured Head TSL parameters	(22.0 ± 0.2) °C	37.9 ± 6 %	1.86 mho/m ± 6 %
Head TSL temperature change during test	< 0.5 °C	----	----

SAR result with Head TSL

SAR averaged over 1 cm^3 (1 g) of Head TSL	Condition	
SAR measured	250 mW input power	13.7 W/kg
SAR for nominal Head TSL parameters	normalized to 1W	**53.5 W/kg ± 17.0 % (k=2)**

SAR averaged over 10 cm^3 (10 g) of Head TSL	condition	
SAR measured	250 mW input power	6.35 W/kg
SAR for nominal Head TSL parameters	normalized to 1W	**25.1 W/kg ± 16.5 % (k=2)**

Body TSL parameters

The following parameters and calculations were applied.

	Temperature	**Permittivity**	**Conductivity**
Nominal Body TSL parameters	22.0 °C	52.7	1.95 mho/m
Measured Body TSL parameters	(22.0 ± 0.2) °C	50.7 ± 6 %	2.04 mho/m ± 6 %
Body TSL temperature change during test	< 0.5 °C	----	----

SAR result with Body TSL

SAR averaged over 1 cm^3 (1 g) of Body TSL	Condition	
SAR measured	250 mW input power	13.3 W/kg
SAR for nominal Body TSL parameters	normalized to 1W	**51.6 W/kg ± 17.0 % (k=2)**

SAR averaged over 10 cm^3 (10 g) of Body TSL	condition	
SAR measured	250 mW input power	6.18 W/kg
SAR for nominal Body TSL parameters	normalized to 1W	**24.3 W/kg ± 16.5 % (k=2)**

Appendix (Additional assessments outside the scope of SCS 0108)

Antenna Parameters with Head TSL

Impedance, transformed to feed point	53.5 Ω + 1.6 jΩ
Return Loss	- 28.6 dB

Antenna Parameters with Body TSL

Impedance, transformed to feed point	49.6 Ω + 4.0 jΩ
Return Loss	- 27.9 dB

General Antenna Parameters and Design

Electrical Delay (one direction)	1.159 ns

After long term use with 100W radiated power, only a slight warming of the dipole near the feedpoint can be measured.

The dipole is made of standard semirigid coaxial cable. The center conductor of the feeding line is directly connected to the second arm of the dipole. The antenna is therefore short-circuited for DC-signals. On some of the dipoles, small end caps are added to the dipole arms in order to improve matching when loaded according to the position as explained in the "Measurement Conditions" paragraph. The SAR data are not affected by this change. The overall dipole length is still according to the Standard.
No excessive force must be applied to the dipole arms, because they might bend or the soldered connections near the feedpoint may be damaged.

Additional EUT Data

Manufactured by	SPEAG

DASY5 Validation Report for Head TSL

Date: 09.09.2019

Test Laboratory: SPEAG, Zurich, Switzerland

DUT: Dipole 2450 MHz; Type: D2450V2; Serial: D2450V2 - SN:713

Communication System: UID 0 - CW; Frequency: 2450 MHz
Medium parameters used: f = 2450 MHz; σ = 1.86 S/m; ε_r = 37.9; ρ = 1000 kg/m^3
Phantom section: Flat Section
Measurement Standard: DASY5 (IEEE/IEC/ANSI C63.19-2011)

DASY52 Configuration:

- Probe: EX3DV4 - SN7349; ConvF(7.9, 7.9, 7.9) @ 2450 MHz; Calibrated: 29.05.2019
- Sensor-Surface: 1.4mm (Mechanical Surface Detection)
- Electronics: DAE4 Sn601; Calibrated: 30.04.2019
- Phantom: Flat Phantom 5.0 (front); Type: QD 000 P50 AA; Serial: 1001
- DASY52 52.10.2(1504); SEMCAD X 14.6.12(7470)

Dipole Calibration for Head Tissue/Pin=250 mW, d=10mm/Zoom Scan (7x7x7)/Cube 0:

Measurement grid: dx=5mm, dy=5mm, dz=5mm
Reference Value = 118.4 V/m; Power Drift = 0.06 dB
Peak SAR (extrapolated) = 27.2 W/kg
SAR(1 g) = 13.7 W/kg; SAR(10 g) = 6.35 W/kg
Maximum value of SAR (measured) = 22.5 W/kg

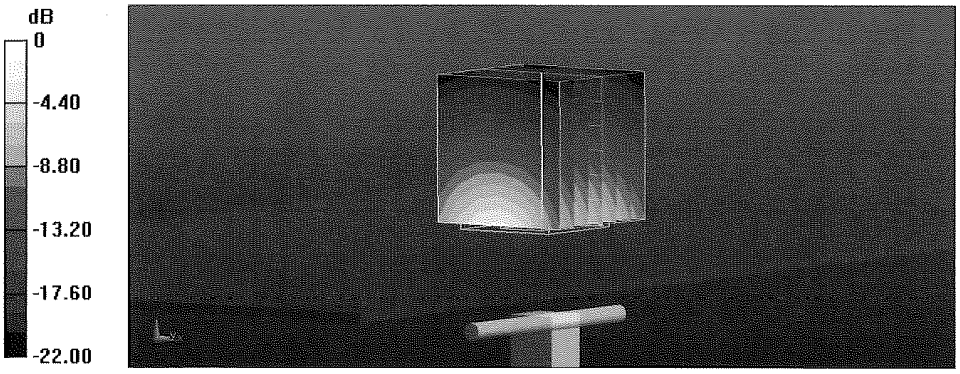

0 dB = 22.5 W/kg = 13.52 dBW/kg

UL Japan, Inc.
Ise EMC Lab.
4383-326 Asama-cho, Ise-shi, Mie-ken 516-0021 JAPAN
Telephone: +81 596 24 8999
Facsimile: +81 596 24 8124

Impedance Measurement Plot for Head TSL

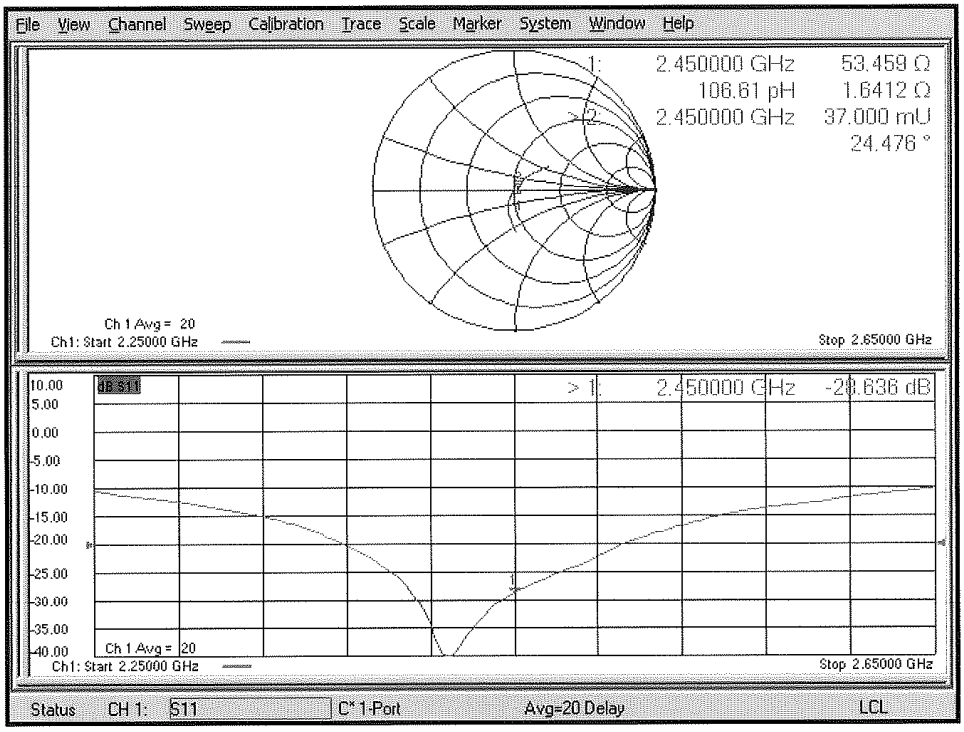

DASY5 Validation Report for Body TSL

Date: 09.09.2019

Test Laboratory: SPEAG, Zurich, Switzerland

DUT: Dipole 2450 MHz; Type: D2450V2; Serial: D2450V2 - SN:713

Communication System: UID 0 - CW; Frequency: 2450 MHz
Medium parameters used: f = 2450 MHz; σ = 2.04 S/m; ε_r = 50.7; ρ = 1000 kg/m^3
Phantom section: Flat Section
Measurement Standard: DASY5 (IEEE/IEC/ANSI C63.19-2011)

DASY52 Configuration:

- Probe: EX3DV4 - SN7349; ConvF(7.94, 7.94, 7.94) @ 2450 MHz; Calibrated: 29.05.2019
- Sensor-Surface: 1.4mm (Mechanical Surface Detection)
- Electronics: DAE4 Sn601; Calibrated: 30.04.2019
- Phantom: Flat Phantom 5.0 (back); Type: QD 000 P50 AA; Serial: 1002
- DASY52 52.10.2(1504); SEMCAD X 14.6.12(7470)

Dipole Calibration for Body Tissue/Pin=250 mW, d=10mm/Zoom Scan (7x7x7)/Cube 0:

Measurement grid: dx=5mm, dy=5mm, dz=5mm
Reference Value = 109.7 V/m; Power Drift = 0.00 dB
Peak SAR (extrapolated) = 26.6 W/kg
SAR(1 g) = 13.3 W/kg; SAR(10 g) = 6.18 W/kg
Maximum value of SAR (measured) = 21.9 W/kg

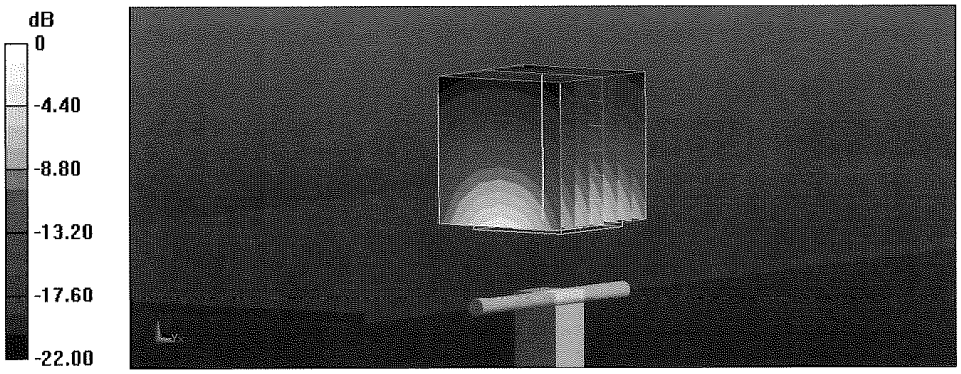

0 dB = 21.9 W/kg = 13.40 dBW/kg

UL Japan, Inc.
Ise EMC Lab.
4383-326 Asama-cho, Ise-shi, Mie-ken 516-0021 JAPAN
Telephone: +81 596 24 8999
Facsimile: +81 596 24 8124

Impedance Measurement Plot for Body TSL

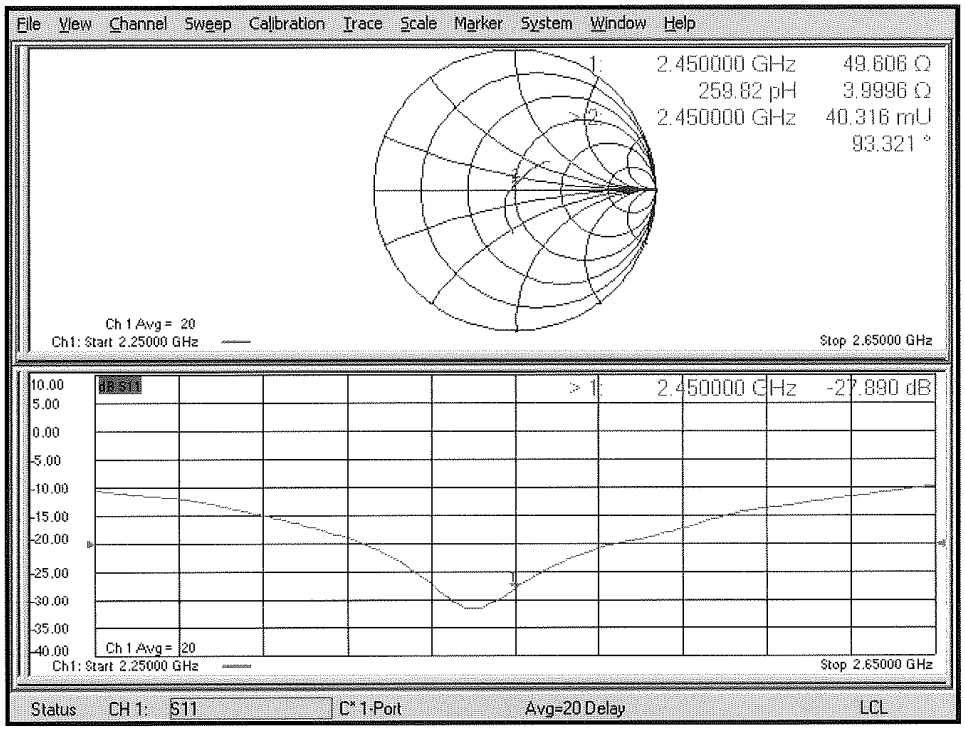

D2450V2 Calibration for Impedance and Return-loss

Equipment	Dipole Antenna	Model	D2450V2
Manufacture	Schmid & Partner Engineering AG	Serial	713
Tested by	Hisayoshi Sato		

1. Test environment

Date	September 10, 2020		
Ambient Temperature	24.5 deg.C	Relative humidity	50 %RH
Date	September 2, 2021		
Ambient Temperature	23.0 deg.C	Relative humidity	40 %RH

2. Equipment used

September 10, 2020

Control No.	Instrument	Manufacturer	Model No	Serial No	Test Item	Calibration Date * Interval(month)
EST-30	Network Analyzer	Keysight Technologies Inc	N5230A	MY46400314	SAR	2020/08/17 * 12
EST-62	Calibration Kit	Keysight Technologies Inc	85032F	MY41495257	SAR	2019/09/26 * 12
MPF-03	2 mm Oval Flat Phantom	Schmid & Partner Engineering AG	QDOVA001BB	1203	SAR	2020/05/25 * 12
MPSAM-03	SAM Phantom	Schmid & Partner Engineering AG	QD000P40CD	1764	SAR	2020/05/25 * 12
MOS-30	Thermo-Hygrometer	CUSTOM	CTH-201	3001	SAR	2020/07/10 * 12
MHBBL600-10000	Head Simulating Liquid	Schmid & Partner Engineering AG	HBBL600-10000V6	SL AAH U16 BC		-
MMBBL600-6000	Body Simulating Liquid	Schmid & Partner Engineering AG	MBBL600-6000	SL AAM U16 BC		-

September 2, 2021

Control No.	Instrument	Manufacturer	Model No	Serial No	Test Item	Calibration Date * Interval(month)
EST-63	Network Analyzer	Keysight Technologies Inc	E5071C	MY46523746	SAR	2021/07/02 * 12
EST-57	2.4 mm Calibration Kit	Keysight Technologies Inc	85056A	MY44300225	SAR	2020/09/01 * 12
MPSAM-02	SAM Phantom	Schmid & Partner Engineering AG	QD000P40CB	1333	SAR	2021/05/27 * 12
MPF-02	2 mm Oval Flat Phantom	Schmid & Partner Engineering AG	QDOVA001BB	1045	SAR	2021/05/28 * 12
MOS-33	Thermo-Hygrometer	CUSTOM	CTH-201	-	SAR	2021/07/08 * 12
MHBBL600-10000	Head Simulating Liquid	Schmid & Partner Engineering AG	HBBL600-10000V6	SL AAH U16 BC		-
MMBBL600-6000	Body Simulating Liquid	Schmid & Partner Engineering AG	MBBL600-6000	SL AAM U16 BC		-

3. Test Result

Impeadance,Transformed to feed point	cal day	Head (real part) [Ω]	Head (img part) [jΩ]	Deviation (real part) [Ω]	Deviation (img part) [jΩ]	Tolerance	Result
Calibration (SPEAG)	2019/9/9	53.50	1.60	-	-	-	-
Calibration(ULJ)	2020/9/10	54.30	1.13	0.80	-0.47	+/- 5 Ω +/- 5 jΩ	Complied
Calibration(ULJ)	2021/9/2	52.24	1.35	-1.27	-0.25	+/- 5 Ω +/- 5 jΩ	Complied

Return loss	cal day	Head [dB]	Deviation [dB]	Tolerance [+/- dB]	Result
Calibration (SPEAG)	2019/9/9	-28.60	-	-	-
Calibration(ULJ)	2020/9/10	-27.41	1.19	5.72	Complied
Calibration(ULJ)	2021/9/2	-31.84	-3.24	5.72	Complied

Impeadance,Transformed to feed point	cal day	Body (real part) [Ω]	Body (img part) [jΩ]	Deviation (real part) [Ω]	Deviation (img part) [jΩ]	Tolerance	Result
Calibration (SPEAG)	2019/9/9	49.60	4.00	-	-	-	-
Calibration(ULJ)	2020/9/10	47.88	2.10	-1.72	-1.90	+/- 5 Ω +/- 5 jΩ	Complied
Calibration(ULJ)	2021/9/2	49.60	4.77	0.00	0.77	+/- 5 Ω +/- 5 jΩ	Complied

Return loss	cal day	Body [dB]	Deviation [dB]	Tolerance [+/- dB]	Result
Calibration (SPEAG)	2019/9/9	-27.90	-	-	-
Calibration(ULJ)	2020/9/10	-30.31	-2.41	5.58	Complied
Calibration(ULJ)	2021/9/2	-26.33	1.57	5.58	Complied

Tolerance: According to the KDB865664 D1

Measurement Plots (September 10, 2020)

<Head Liquid>

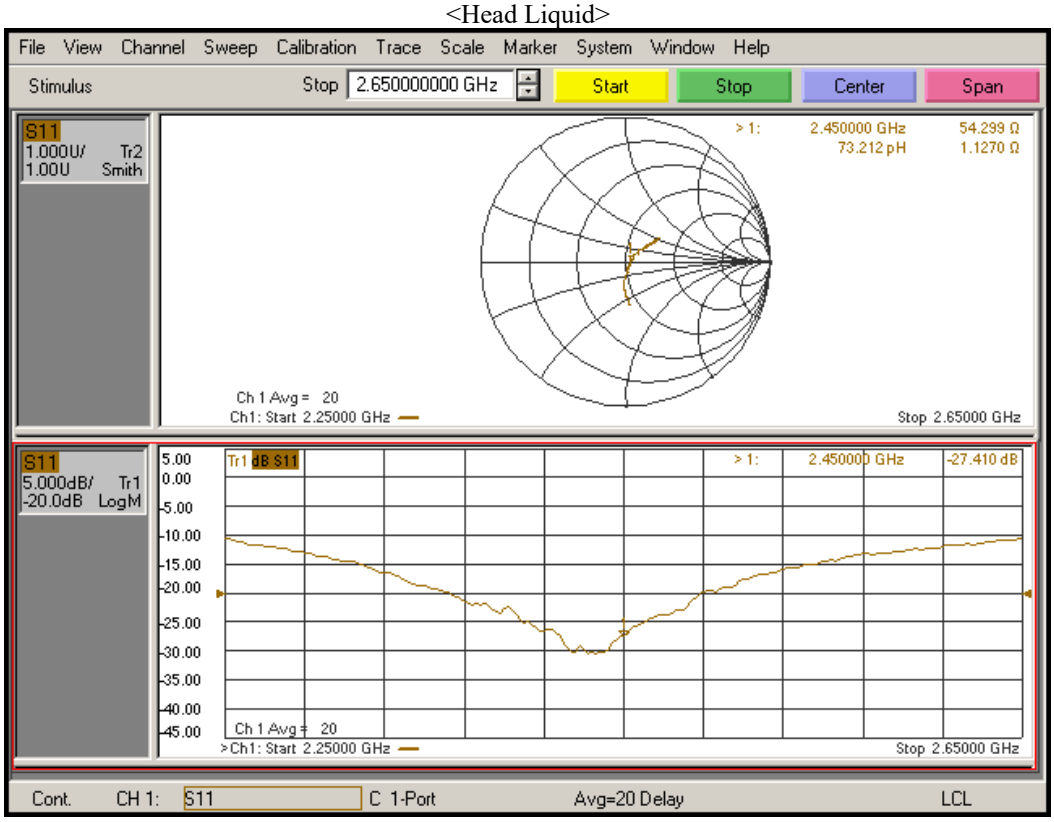

<Body Liquid>

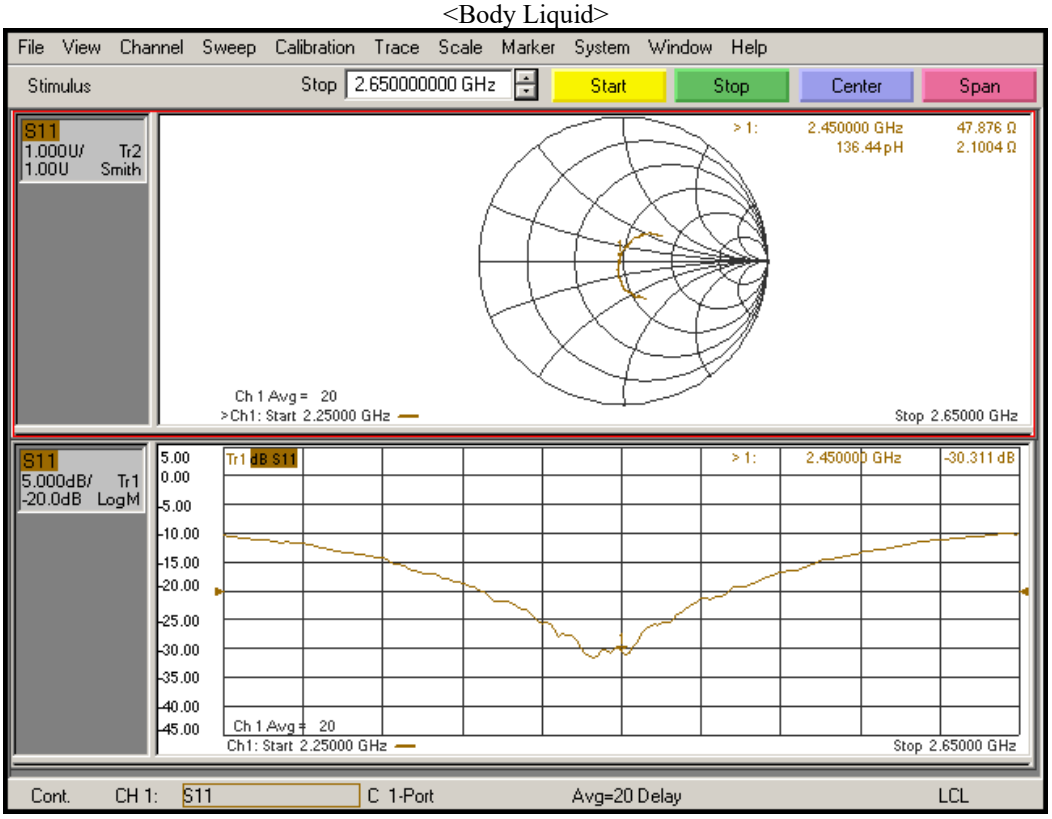

Measurement Plots (September 2, 2021)

<Head Liquid>

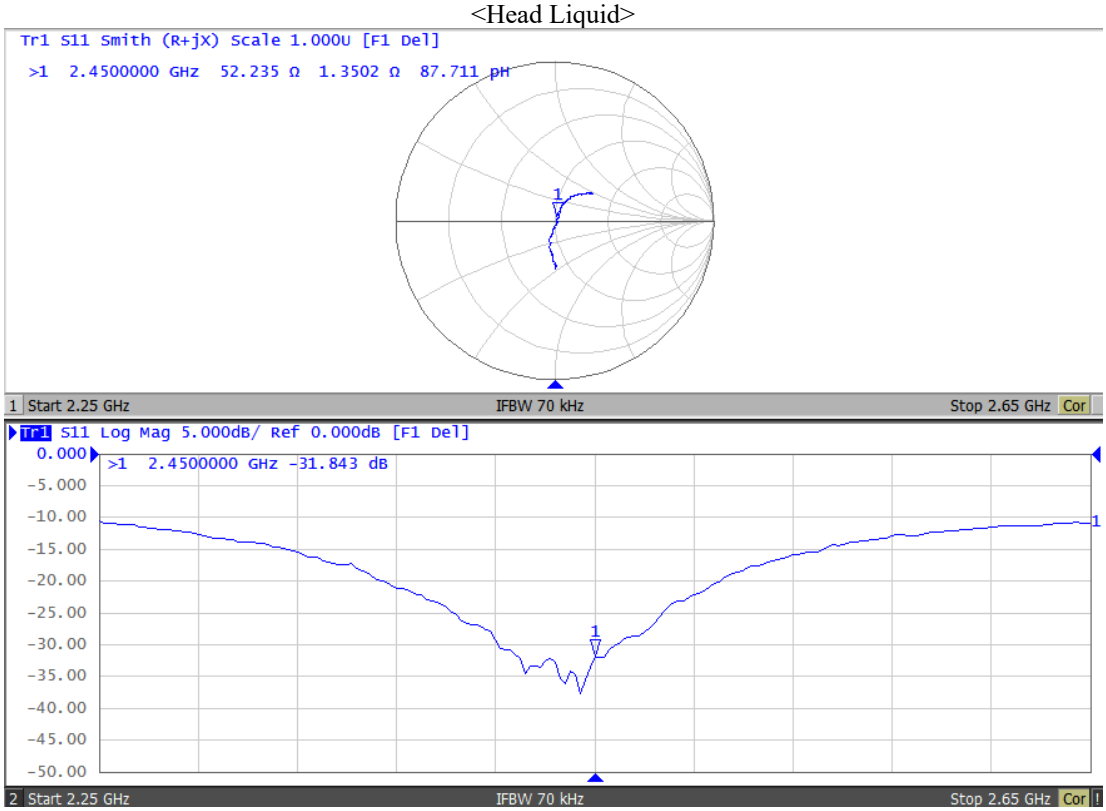

<Body Liquid>

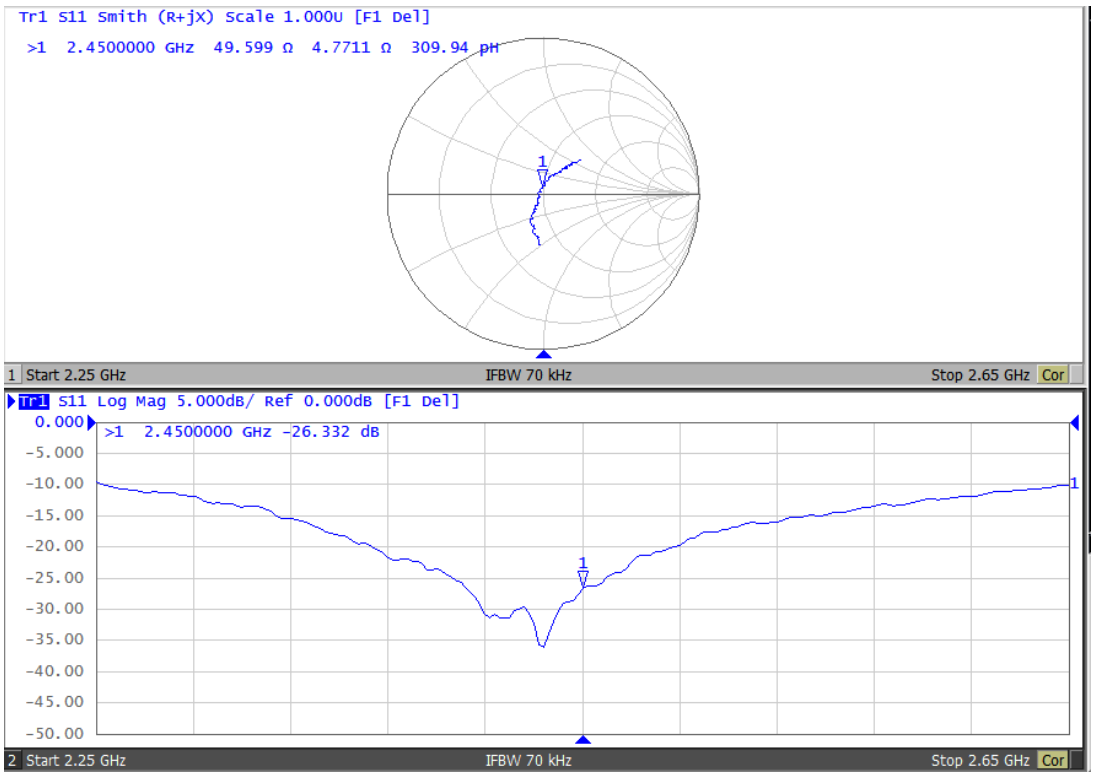

System Check Dipole SAR Calibration Certificate -DipoleD5GHz (D5GHzV2 S/N: 1020)

Calibration Laboratory of
Schmid & Partner
Engineering AG
Zeughausstrasse 43, 8004 Zurich, Switzerland

S Schweizerischer Kalibrierdienst
C Service suisse d'étalonnage
Servizio svizzero di taratura
S Swiss Calibration Service

Accredited by the Swiss Accreditation Service (SAS)
The Swiss Accreditation Service is one of the signatories to the EA Multilateral Agreement for the recognition of calibration certificates

Accreditation No.: SCS 0108

Client **UL Japan (RCC)**

Certificate No: D5GHzV2-1020_Nov21

CALIBRATION CERTIFICATE

Object	D5GHzV2 - SN:1020
Calibration procedure(s)	QA CAL-22.v6 Calibration Procedure for SAR Validation Sources between 3-10 GHz
Calibration date:	November 18, 2021

This calibration certificate documents the traceability to national standards, which realize the physical units of measurements (SI).
The measurements and the uncertainties with confidence probability are given on the following pages and are part of the certificate.

All calibrations have been conducted in the closed laboratory facility: environment temperature (22 ± 3)°C and humidity < 70%.

Calibration Equipment used (M&TE critical for calibration)

Primary Standards	ID #	Cal Date (Certificate No.)	Scheduled Calibration
Power meter NRP	SN: 104778	09-Apr-21 (No. 217-03291/03292)	Apr-22
Power sensor NRP-Z91	SN: 103244	09-Apr-21 (No. 217-03291)	Apr-22
Power sensor NRP-Z91	SN: 103245	09-Apr-21 (No. 217-03292)	Apr-22
Reference 20 dB Attenuator	SN: BH9394 (20k)	09-Apr-21 (No. 217-03343)	Apr-22
Type-N mismatch combination	SN: 310982 / 06327	09-Apr-21 (No. 217-03344)	Apr-22
Reference Probe EX3DV4	SN: 3503	30-Dec-20 (No. EX3-3503_Dec20)	Dec-21
DAE4	SN: 601	01-Nov-21 (No. DAE4-601_Nov21)	Nov-22

Secondary Standards	ID #	Check Date (in house)	Scheduled Check
Power meter E4419B	SN: GB39512475	30-Oct-14 (in house check Oct-20)	In house check: Oct-22
Power sensor HP 8481A	SN: US37292783	07-Oct-15 (in house check Oct-20)	In house check: Oct-22
Power sensor HP 8481A	SN: MY41092317	07-Oct-15 (in house check Oct-20)	In house check: Oct-22
RF generator R&S SMT-06	SN: 100972	15-Jun-15 (in house check Oct-20)	In house check: Oct-22
Network Analyzer Agilent E8358A	SN: US41080477	31-Mar-14 (in house check Oct-20)	In house check: Oct-22

	Name	Function	Signature
Calibrated by:	Jeffrey Katzman	Laboratory Technician	
Approved by:	Niels Kuster	Quality Manager	

Issued: November 18, 2021

This calibration certificate shall not be reproduced except in full without written approval of the laboratory.

Certificate No: D5GHzV2-1020_Nov21 Page 1 of 14

Calibration Laboratory of
Schmid & Partner
Engineering AG
Zeughausstrasse 43, 8004 Zurich, Switzerland

S Schweizerischer Kalibrierdienst
C Service suisse d'étalonnage
Servizio svizzero di taratura
S Swiss Calibration Service

Accredited by the Swiss Accreditation Service (SAS)
The Swiss Accreditation Service is one of the signatories to the EA Multilateral Agreement for the recognition of calibration certificates

Accreditation No.: SCS 0108

Glossary:

TSL	tissue simulating liquid
ConvF	sensitivity in TSL / NORM x,y,z
N/A	not applicable or not measured

Calibration is Performed According to the Following Standards:

a) IEC/IEEE 62209-1528, "Measurement Procedure For The Assessment Of Specific Absorption Rate Of Human Exposure To Radio Frequency Fields From Hand-Held And Body-Worn Wireless Communication Devices - Part 1528: Human Models, Instrumentation And Procedures (Frequency Range of 4 MHz to 10 GHz)", October 2020.
b) KDB 865664, "SAR Measurement Requirements for 100 MHz to 6 GHz"

Additional Documentation:

c) DASY System Handbook

Methods Applied and Interpretation of Parameters:

- *Measurement Conditions:* Further details are available from the Validation Report at the end of the certificate. All figures stated in the certificate are valid at the frequency indicated.
- *Antenna Parameters with TSL:* The source is mounted in a touch configuration below the center marking of the flat phantom.
- *Return Loss:* This parameter is measured with the source positioned under the liquid filled phantom (as described in the measurement condition clause). The Return Loss ensures low reflected power. No uncertainty required.
- *SAR measured:* SAR measured at the stated antenna input power.
- *SAR normalized:* SAR as measured, normalized to an input power of 1 W at the antenna connector.
- *SAR for nominal TSL parameters:* The measured TSL parameters are used to calculate the nominal SAR result.

The reported uncertainty of measurement is stated as the standard uncertainty of measurement multiplied by the coverage factor k=2, which for a normal distribution corresponds to a coverage probability of approximately 95%.

Measurement Conditions

DASY system configuration, as far as not given on page 1.

DASY Version	DASY52	V52.10.4
Extrapolation	Advanced Extrapolation	
Phantom	Modular Flat Phantom V5.0	
Distance Dipole Center - TSL	10 mm	with Spacer
Zoom Scan Resolution	dx, dy = 4.0 mm, dz = 1.4 mm	Graded Ratio = 1.4 (Z direction)
Frequency	5250 MHz ± 1 MHz 5600 MHz ± 1 MHz 5800 MHz ± 1 MHz 5850 MHz ± 1 MHz	

Head TSL parameters at 5250 MHz

The following parameters and calculations were applied.

	Temperature	Permittivity	Conductivity
Nominal Head TSL parameters	22.0 °C	35.9	4.71 mho/m
Measured Head TSL parameters	(22.0 ± 0.2) °C	35.9 ± 6 %	4.58 mho/m ± 6 %
Head TSL temperature change during test	< 0.5 °C	----	----

SAR result with Head TSL at 5250 MHz

SAR averaged over 1 cm³ (1 g) of Head TSL	Condition	
SAR measured	100 mW input power	7.79 W/kg
SAR for nominal Head TSL parameters	normalized to 1W	**77.8 W/kg ± 19.9 % (k=2)**

SAR averaged over 10 cm³ (10 g) of Head TSL	condition	
SAR measured	100 mW input power	2.23 W/kg
SAR for nominal Head TSL parameters	normalized to 1W	**22.3 W/kg ± 19.5 % (k=2)**

Head TSL parameters at 5600 MHz

The following parameters and calculations were applied.

	Temperature	Permittivity	Conductivity
Nominal Head TSL parameters	22.0 °C	35.5	5.07 mho/m
Measured Head TSL parameters	(22.0 ± 0.2) °C	35.4 ± 6 %	4.94 mho/m ± 6 %
Head TSL temperature change during test	< 0.5 °C	----	----

SAR result with Head TSL at 5600 MHz

SAR averaged over 1 cm³ (1 g) of Head TSL	Condition	
SAR measured	100 mW input power	8.18 W/kg
SAR for nominal Head TSL parameters	normalized to 1W	**81.7 W/kg ± 19.9 % (k=2)**

SAR averaged over 10 cm³ (10 g) of Head TSL	condition	
SAR measured	100 mW input power	2.33 W/kg
SAR for nominal Head TSL parameters	normalized to 1W	**23.2 W/kg ± 19.5 % (k=2)**