ADXV DAS User Manual

Version 1.80

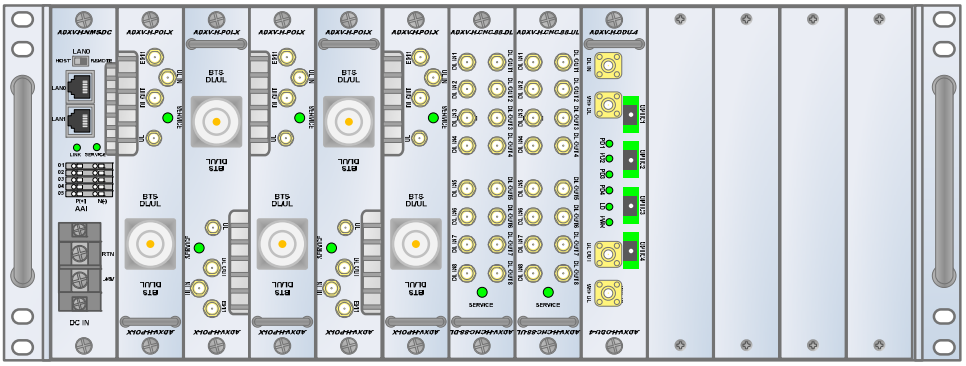

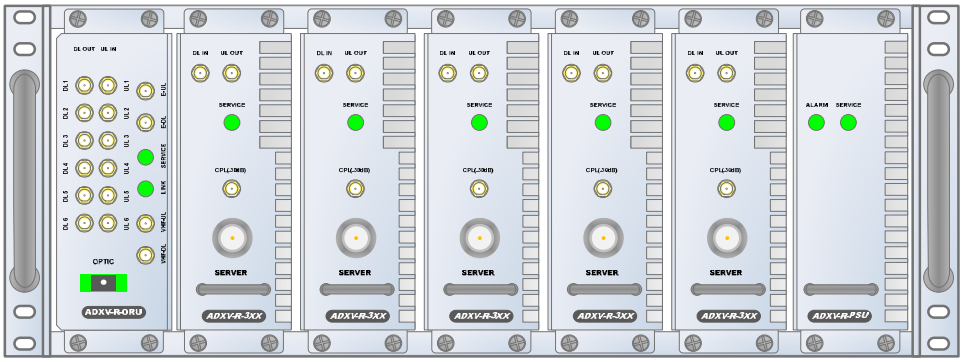

3116 West Vanowen St.
Burbank, CA 91505
Tel: 818-840-8131
Fax: 818-840-8138

www.adrftech.com

Information in this document is subject to change without notice.

Advanced RF Technologies, Inc. 1996-2015.
All rights reserved.

- Please send comments to:

E-Mail: info@adrftech.com

Phone: (818) 840-8131
(800) 313-9345
Fax: (818) 840-8138

- Address:

Advanced RF Technologies, Inc.
Attention: Technical Publications Department
3116 Vanowen St.
Burbank, CA 91505
USA
www.adrftech.com

Revision History

Version	Author	Descriptions	Date
0.1	YH Ko	Initial Release	03/07/2016
0.9	YH Ko	VU, WCS, BRS, PS78 added	
1.0	CK CHO	VU External Filter, Frequency Range Change Update	07/05/2017
1.1	CK CHO	Add Warning Statement	07/25/2017
1.3	CK CHO	Add 600MHz Band	01/18/2018
1.31	CK CHO	Revision Update	01/26/2018
1.4	CK Cho	BTF	11/28/2019
1.5	CK Cho	Add 900MHz Band	07/03/2020
1.51	CK Cho	Add 900MHz Band revision	10/20/2021
1.60	CK Cho	337FN	06/03/2022
1.70	CK Cho	N77H/N77L	08/18/2022
1.80	CK Cho	S8	03/23/2023

Change List

Version	Change list	Contents

Table of Contents

1. Introduction 11
   1.1 Highlights 11
   1.2 ADXV DAS Quick View 12
      1.2.1 HE Quick View 12
      1.2.2 RU Quick View 13
   1.3 Warnings and Hazards 13
2. Block Diagram 17
   2.1 ADXV DAS Block Diagram 17
   2.2 ADXV-DAS Scalability 18
3. ADXv Overview 19
   3.1 Head End 19
      3.1.1 NMS (Network Management System) 20
         3.1.1.1 LEDs 21
         3.1.1.2 AAI (only for DC type) 21
         3.1.1.3 Ethernet Port 22
         3.1.1.4 Host/Remote Switch 22
         3.1.1.5 Power Connection 23
         3.1.1.6 POI (ADXV-H-POI-x) 24
      3.1.2 POIL (ADXV-H-POIL-x) 25
      3.1.3 POIL-VU (ADXV-H-POIL-VU) 27
         3.1.3.1 LED 27
         3.1.3.2 RF Ports 28
      3.1.4 Channel Combiner (CHC, ADXV-H-CHC) 28
         3.1.4.1 RF ports 29
      3.1.5 Optical Donor Unit (ODU, ADXV-H-ODU-4) 29
         3.1.5.1 LED 30
         3.1.5.2 RF Ports 30
         3.1.5.3 Optic Ports 31
   3.2 Remote Unit (RU) 31
      3.2.1 Remote Module (RM, ADXV-R-3xx) 33
         3.2.1.1 RM ID numbering and RF line connection scheme 34
         3.2.1.2 RF port 35
         3.2.1.3 Power port 35
         3.2.1.4 LED 35
      3.2.2 Optical Remote Unit (ORU, ADXV-R-ORU) 35
         3.2.2.1 Front port 36
         3.2.2.2 Rear port 36

3.2.2.3 LED 36
3.2.3 PSU (ADXV-R-PSU) 36
3.2.3.1 Port 37
3.2.3.2 LED 37
3.2.3.3 AC Switch 37
3.3 Remote Unit (RU) for N4X 38
3.3.1 Port 40
4. Cable Connection 41
4.1 Head End Connection Diagrams 41
4.2 Remote Unit Connection Diagrams 42
5. Mounting method 43
5.1 Head End 43
5.1.1 Rack Mount 43
5.2 RU 44
5.2.1 Rack Mount 44
6. Installation 44
6.1 Pre-Installation Inspection 44
6.2 ADXV DAS Installation Procedure 45
6.2.1 HE Installation Procedure 45
6.2.1.1 Installing a ADXV DAS HE in a rack 45
6.2.2 RU Installation Procedure 47
6.2.3 RF coaxial cable and antenna connection 49
6.3 Grounding 49
6.4 Optic Port Cleaning 50
7. Web-GUI 51
7.1 Web-GUI Setup 51
7.1.1 DAS system/PC Connection Using Web-GUI 51
7.2 Administrator/User Mode 52
7.2.1 Common 52
7.2.1.1 Navigation Tree 52
7.2.1.2 Power Status 52
7.2.1.3 Commissioning Status 52
7.2.1.4 Information 52
7.2.2 Status Tab 54
7.2.2.1 Status – NMS 54
7.2.3 System 57
7.2.3.1 System: Account 57
7.2.3.2 System: Logs 58
7.2.3.3 System: Update 59

7.2.4 Help 59
7.2.5 Logout 60
7.3 Guest Mode 60
8. System-Wide Specification 61
9. Mechanical Drawing 69
9.1 HE 69
9.2 RU 70
9.3 N4X RU for PS78 71
9.4 N4X RU for VU 72

Figures

Figure 2-1 ADXV DAS HE Quick View (Front and Rear) 12
Figure 2-2 ADXV DAS RU Quick View (Front and Rear) 13
Figure 2-1 ADXV DAS Block Diagram 17
Figure 3-1 Head End Front View 19
Figure 3-2 ADXV-H-NMS-DC Front View 20
Figure 3-3 ADXV-H-NMS-AC Front View 21
Figure 3-4 NMS LED 21
Figure 3-5 NMS AAI 22
Figure 3-6 Ethernet Port 22
Figure 3-7 Host/Remote Switch 23
Figure 3-8 POI front View 24
Figure 3-9 POIL front View 26
Figure 3-10 POIL-VU front View 27
Figure 3-11 POI LED 27
Figure 3-12 ADXV-H-CHC Front View 28
Figure 3-13 ADXV-H-ODU-4 Front view 30
Figure 3-14 ADXV-H-ODU-4 LED 30
Figure 3-15 ODU RF Ports 31
Figure 3-16 ODU Optic Ports 31
Figure 3-17 ADXV-R Front and Rear (without FAN and with FAN) View 32
Figure 3-18 ADXV-R-3XX (RM) Front and Rear View 33
Figure 3-19 RM ID numbering and RF connection between ORU and RM 34
Figure 3-20 ADXV-R-ORU Front and Rear View 35
Figure 3-21 ADXV-R-PSU Front and Rear View 37
Figure 3-22 ADXV-R-PSU Front and Rear View 38
Figure 3-23 ADXV-R-3378P-N4X Front and Bottom View 39
Figure 3-24 ADXV-R-25VU-N4X Front and Bottom View 40
Figure 4-1 HE Cable connection (4 ADXV-H-POIs, 2 ADXV-H-ODUs) 41
Figure 4-2 ADXV-RU 5ands connection 42
Figure 5-1 HE Rack Mount (Front & Rear view) 43
Figure 5-2 RU Rack Mount Front and Rear View 44
Figure 6-1 HE Installation Procedure 46
Figure 6-2 RU Installation Procedure 48
Figure 6-3 HE Ground Cable Connection, Protective Earthing Conductor (HE chassis rear side) 49
Figure 6-4 RU Ground Cable Connection, Protective Earthing Conductor (RU chassis rear side) 49
Figure 6-5 Optic Connector Cleaning (left) and Optic Port Cleaning (right) 50
Figure 6-6 SC/APC Optic Connector Dust Cap 50
Figure 7-1 Login screen 51
Figure 7-2 ADXV DAS General Information 53
Figure 7-3 SNMP (Install – NMS) 54
Figure 7-4 Location Setting (Install – NMS) 55
Figure 7-5 External Modem Box Setting (Install – NMS) 55
Figure 7-6 Description (Install – NMS) 55
Figure 7-7 SNMP Agent False Alarm Test (Install – NMS) 56
Figure 7-8 Location Info / Installer Info (Install – NMS) 56
Figure 7-9 Date & Time Setting (Install – NMS) 57
Figure 7-10 Description (Install-Remote Module) 57
Figure 7-11 Account Management 57
Figure 7-12 New Account 58
Figure 7-13 Change Password 58

Figure 7-14 User Log 59
Figure 7-15 System update 59
Figure 7-16 Message after System update is complete 59
Figure 7-17 Help 60
Figure 9-1 HE Drawing 69
Figure 9-2 RU Drawing 70
Figure 9-3 PS78 N4X RU Drawing 71
Figure 9-4 VU N4X RU Drawing 72

Tables

Table 2-1 ADXV-DAS Scalability 18
Table 3-1 NMS LED Specifications 21
Table 3-2 NMS AAI Specifications 22
Table 3-3 POI LED Specifications 27
Table 3-4 POI RF port 28
Table 3-5 ODU LED Specifications 30
Table 7-1 Account Information for Login 51
Table 7-2 Navigation tree 52
Table 7-3 Power Supply Status 52
Table 7-4 Commissioning ICON 52
Table 7-5 System Summary Description 54

Terms and Abbreviations

The following is a list of abbreviations and terms used throughout this document.

Abbreviation/Term	Definition
AGC	Automatic Gain Control
ALC	Automatic Level Control
AROMS	ADRF' Repeater Operation and Management System
BCU	Band Combiner Unit
BTS	Base Transceiver Station
CDMA	Code Division Multiple Access
CHC	Channel combiner
CW	Continuous Wave (un-modulated signal)
DAS	Distributed Antenna System
DL	Downlink
Downlink	The path covered from the Base Transceiver Station (BTS) to the subscribers' service area via the repeater
HE	Head End
HPA	High Power Amplifier
HW	Hardware
IF	Intermediate Frequency
LNA	Low Noise Amplifier
LTE	Long Term Evolution
MS	Mobile Station
NMS	Network Management System
ODU	Optical Donor Unit which is located in ADXV-HE.
OEU	Optic Expansion Unit
PLL	Phased Locked Loop
POI	Point Of Interface
PSU	Power Supply Unit
RF	Radio Frequency
RU	Remote Unit which is composed of master RU and multiple slaves RU
RM	Remote Module
SW	Software

UL	Uplink
Uplink	The path covered from the subscribers' service area to the Base Transceiver Station (BTS) via the repeater
VSWR	Voltage Standing Wave Ratio

1. INTRODUCTION

Currently the ADXV supports 700 MHz (Lower A, Lower B, Lower C, and Upper C, BAND14), SMR800/Cellular, PCS, AWS, WCS, BRS, PS700, PS800, 900P, VHF and UHF band, N77L, N77H Band, **S8 (800 MHz)**

1.1 Highlights

- Modular Structure (HE)
  - Supports multi bands service in one body
  - Supports up to 12 slot available for POI, POIL, ODU, CHC card, etc.
- Supports up to a of maximum of 96 Remote Units(using Optical Expansion Unit)
- **33dBm**/37dBm of **downlink** composite output power
- Requires only single strand of fiber per remote unit
- Operates with up to 5dBo optical loss
- Supports SNMP v1, v2, v3 (get, set & traps)
- Web-based GUI Interface; No 3rd party GUI software required
- Web-GUI connectivity via DHCP in host mode
- Versatility and Usability: ADXV gives total control to the user. Control parameters such as gain, output power, and alarm threshold can be changed using Web-GUI interface allowing the user to fine tune the system to the given RF environment.

1.2 ADXV DAS Quick View

1.2.1 HE Quick View

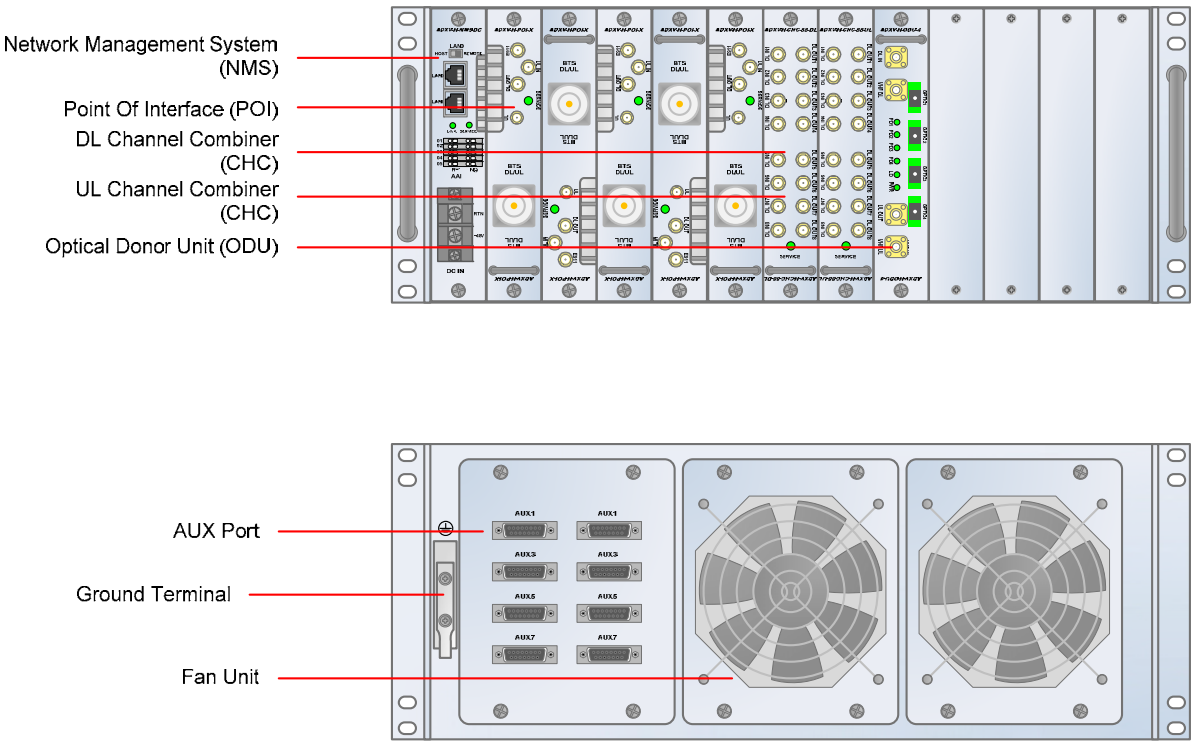

Figure 2-1 ADXV DAS HE Quick View (Front and Rear)

1.2.2
1.2.3 RU Quick View

Figure 2-2 ADXV DAS RU Quick View (Front and Rear)

1.3 Warnings and Hazards

WARNING! ELECTRIC SHOCK

Opening the ADXV DAS could result in electric shock and may cause severe injury.

WARNING! EXPOSURE TO RF

This equipment complies with RF radiation exposure limits set forth for an uncontrolled environment. This equipment should be installed and operated with a minimum distance of 60 cm between the radiator and your body. This transmitter must not be co-located or operating in conjunction with any other antenna or transmitter. RF exposure will be addressed at time of installation and the use of higher gain antennas require larger separation distances. (Max. antenna gain: 5.6 dBi)

WARRANTY

Opening or tampering the ADXV DAS will void all warranties.

Lithium Battery: CAUTION. RISK OF EXPLOSION IF BATTERY IS REPLACED BY INCORRECT TYPE. DISPOSE OF USED BATTERIES ACCORDING TO INSTRUCTIONS.

Ethernet Instructions: This equipment is for indoor use only. All cabling should be limited to inside the building.

FCC Part 15 Class A

NOTE: This equipment has been tested and found to comply with the limits for a Class A digital device, pursuant to part 15 of the FCC Rules. These limits are designed to provide reasonable protection against harmful interference when the equipment is operated in a commercial environment. This equipment generates, uses, and can radiate radio frequency energy and, if not installed and used in accordance with the instruction manual, may cause harmful interference to radio communications. Operation of this equipment in a residential area is likely to cause harmful interference in which case the user will be required to correct the interference at their own expense.

FCC Part 20

WARNING. THIS is NOT a CONSUMER device. It is designed for installation by FCC LICENSEES and QUALIFIED INSTALLERS. You MUST have an FCC LICENSE or express consent of an FCC Licensee to operate this device. Unauthorized use may result in significant forfeiture penalties, including penalties in excess of $100,000 for each continuing violation.

FCC Part 90 Class B

WARNING. THIS is NOT a CONSUMER device. It is designed for installation by FCC LICENSEES and QUALIFIED INSTALLERS. You MUST have an FCC LICENSE or express consent of an FCC Licensee to operate this device. You MUST register Class B signal boosters (as defined in 47 CFR 90.219) online at www.fcc.gov/signal-boosters/registration. Unauthorized use may result in significant forfeiture penalties, including penalties in excess of $100,000 for each continuing violation.

Laser Safety

Fiber optic ports of the ADXV DAS emit invisible laser radiation at the 1310, 1550nm wavelength window.

To avoid eye injury never look directly into the optical ports, patch cords or optical cables. Do not stare into beam or view directly with optical instruments. Always assume optical output is on.

Only technicians familiar with fiber optic safety practices and procedures should perform optical fiber connections and disconnections of the ADXV DAS and the associated cables.

The ADXV DAS complies with 21 CFR 1040.10 and 1040.11 except for deviations pursuant to laser notice No.50 (July26. 2001)@IEC 60825-1, Amendment2 (Jan. 2001).

Care of Fiber Optic Connectors

Do not remove the protective covers on the fiber optic connectors until a connection is ready to be made. Do not leave connectors uncovered when not connected.

The tip of the fiber optic connectors should not come into contact with any object or dust.

Refer to the cleaning procedure for information on the cleaning of the fiber tip.

Use of unauthorized antennas, cables, and/or coupling devices not conforming with ERP/EIRP and/or indoor-only restrictions is prohibited.

Home/ personal use are prohibited

Only 50 ohm rated antennas, cables and passive equipment shall be used with this remote. Any equipment attached to this device not meeting this standard may cause degradation and unwanted signals in the bi-directional system. All components connected to this device must operate in the frequency range of this device.

RSS-GEN (6.8 Transmit antenna)

Under Industry Canada regulations, this radio transmitter may only operate using an antenna of a type and maximum gain approved for the transmitter by Industry Canada. To reduce potential radio interference to other users, the antenna type and its gain should be so chosen that the equivalent isotropically radiated power (e.i.r.p.) is not more than that necessary for successful communication.
Confonctionneravec une antenne d'un type et d'un gain maximal approuvé pour l'émetteur par Industrie Canada. Dans le but de réduire les risques de brouillage radioélectrique à l'intention desautres utilisateurs, il faut choisir le type d'antenne et son gain de sorte que la puissance isotroperayonnée quivalente (p.i.r.e.) ne dépassepas l'intensité nécessaire à l'établissement d'une communication satisfaisante.

RF Radiation Exposure

This equipment complies with RF radiation exposure limits set forth for an uncontrolled environment. This equipment should be installed and operated with a minimum distance of 60 cm between the radiator and your body. This transmitter must not be co-located or operating in conjunction with any other antenna or transmitter. RF exposure will be addressed at time of installation and the use of higher gain antennas require larger separation distances.
(DL: Max. peak gain: 5.6dBi)

L'antenne (ou les antennes) doit être installée de façon à maintenir à tout instant une distance minimum de au moins 60 cm entre la source de radiation (l'antenne) et toute personne physique. Cet appareil ne doit pas être installé ou utilisé en conjonction avec une autre antenne ou émetteur.
(DL: Max. peak gain: 5.6dBi)

2. BLOCK DIAGRAM

2.1 ADXV DAS Block Diagram

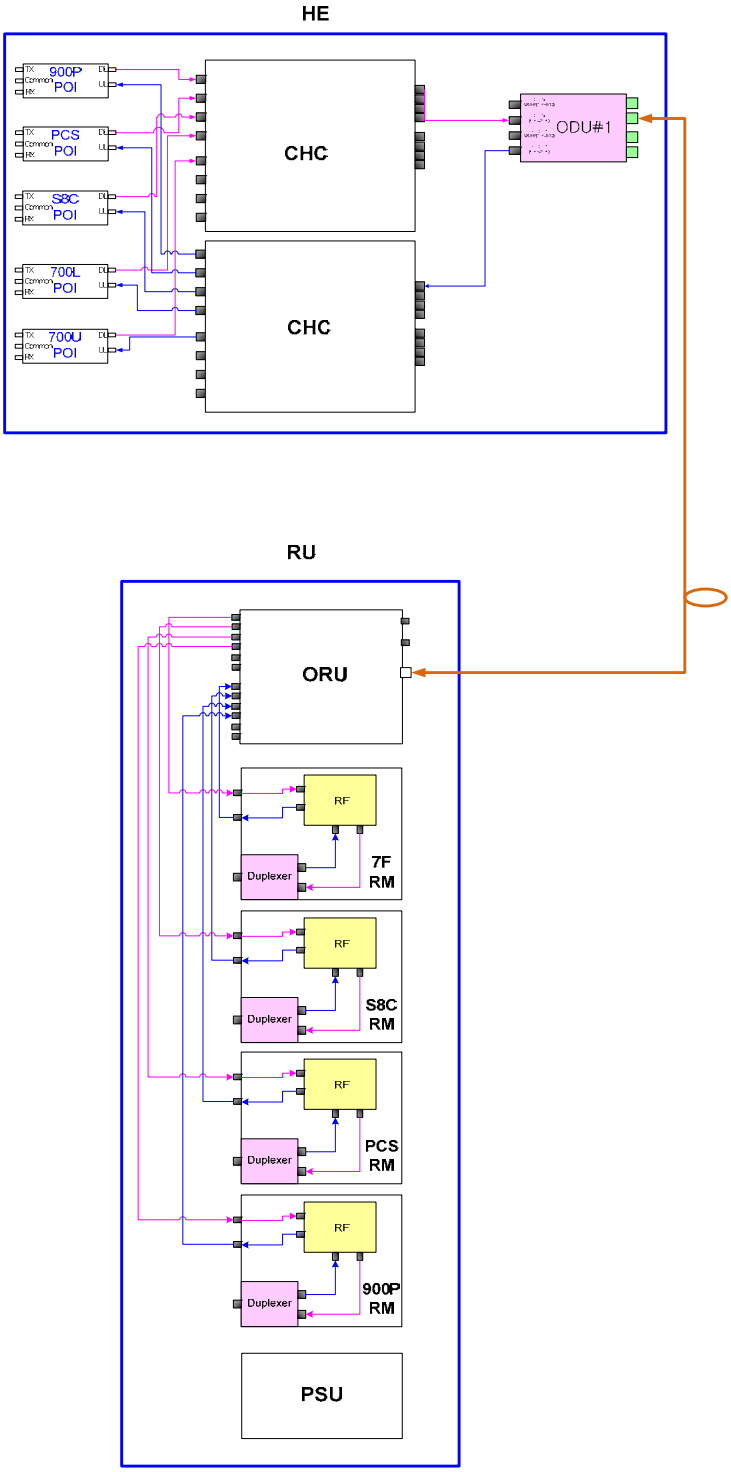

Figure 2-1 ADXV DAS Block Diagram

2.2 ADXV-DAS Scalability

Table 2-1 ADXV-DAS Scalability

Unit			Scalability	Remarks
Supported band			700F,700FN, Cellular, AWS, PCS, SMR800, PS78, VU(VHF, UHF), BRS FDD, BRS TDD, WCS, 900P, N77L, N77H, S8	
HE	POI/POIL		No limitation in 12 slots except NMS	
	NMS		1	
	CHC		No limitation in 12 slots except NMS	
	Optic Unit		No limitation in 12 slots except NMS In case of Aux, No limit in 8 Aux ports	
RU	RU		64	
	PSU (RU)	Adaptor type	1 per Remote Module(RM)	
		19” rack mount (AC or DC)	1	Capable of supplying power to 5 Remote Modules

3. ADXV OVERVIEW

3.1 Head End

The head end unit always has to be connected to the Base Station using a direct cabled connection. This system has not been approved for use with a wireless connection via server antenna to the base station.

- Specifications
  - Size: 19.0 x 19.7 x 7inches (482 x 500 x 178 mm)
  - Weight: 64.8lbs @5 POI, 2 CHC(CHC-X), ODU(ODU-X) and NMS
  - Power Input: 110VAC(optional) or -48VDC

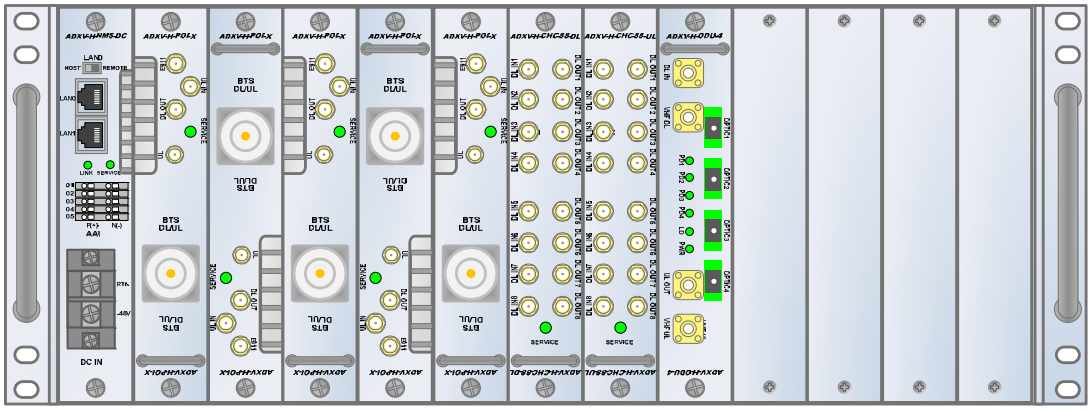

Figure 3-1 Head End Front View

3.1.1 NMS (Network Management System)

- Functions and features
  - Supports SNMP v1, v2, and v3 (get, set & trap) and web-based GUI Interface.
  - Monitors alarms and status
  - Provides control interfaces with all subordinate modules
  - Provides overall DAS structure via the auto tree update function
  - ADXV-H-NMS-DC is for DC type
  - ADXV-H-NMS-AC is for AC type
  - HE's battery backup option is available only in ADXV-H-NMS-AC
- Spec
  - Size: 19.0 x 12.1 x 1.7inches
  - Weight: 3.5lbs

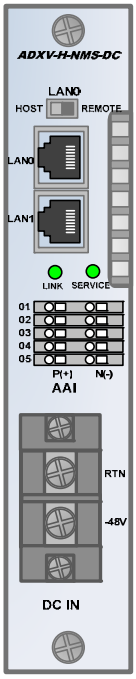

Figure 3-2 ADXV-H-NMS-DC Front View

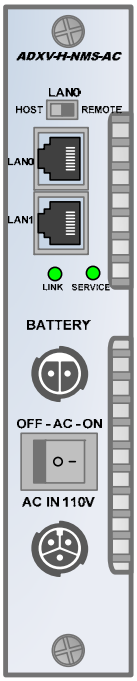

Figure 3-3 ADXV-H-NMS-AC Front View

3.1.1.1 LEDs

NMS has LEDs on the front panel as shown in Figure 3-4.

Figure 3-4 NMS LED

Table 3-1 NMS LED Specifications

ADXV DAS-NMS		Specifications
POWER	Solid Green	NMS power is ON
	OFF	NMS power is OFF
LINK	Solid Red	HE Link Fail alarm exists in the system
	Solid Green	No HE Link Fail alarms are present in the system

3.1.1.2 AAI (only for DC type)

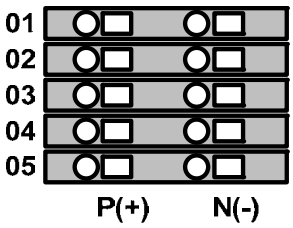

Figure 3-5 NMS AAI

NMS has 5 external alarms out interface pins on the front panel.

Table 3-2 NMS AAI Specifications

AAI Alarm Status	Output
Normal	High Impedance (Open)
Alarm	Low Impedance (Short)

3.1.1.3 Ethernet Port

The Ethernet port can be used to communicate directly with the ADXV DAS using a RJ-45 crossover cable or can also be used to connect the ADXV DAS to an external modem box.

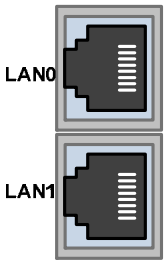

Figure 3-6 Ethernet Port

3.1.1.4 Host/Remote Switch

The Host/Remote Switch allows the user to switch the default Repeater IP, Subnet Mask, and Gateway of the repeater to an alternative setup. These settings can be adjusted by logging into the ADXV DAS in HOST mode and configuring the settings under the Modem Box Setting section under the Install Page of NMS.

Once the settings are set, flipping the switch to the REMOTE position will reboot NMS module with the new alternate settings. *Please note that when the NMS is set to the REMOTE position, DHCP is disabled and the NMS will not automatically assign an IP address to any device that connects directly to the NMS.*

Figure 3-7 Host/Remote Switch

- Host IP: 192.168.63.1 (Fixed IP, unable to modify this IP address)
- Remote IP: 192.168.63.5 (Default IP, but can be modified in Host mode)

3.1.1.5 Power Connection

- For DC type(-48VDC)

  ADXV-H-NMS-DC has terminal block for DC power connection on the front panel.

  You should verify voltage and power polarity of each power line and should turn on the power after power connection necessarily.

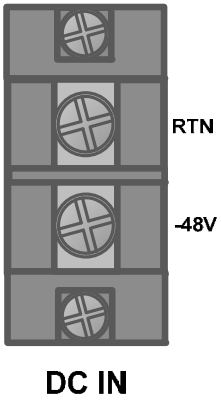

- For AC type(AC 110V)

  ADXV-H-NMS-AC has two push-lock connectors for battery backup and AC power connection on the front panel.

  You should verify voltage and should turn on the power after power connection necessarily

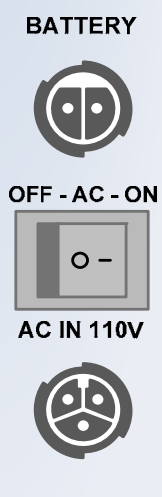

3.1.1.6 POI (ADXV-H-POI-x)

Figure 3-8 POI front View

3.1.1.7 POI (ADXV-H-POI-N77x)

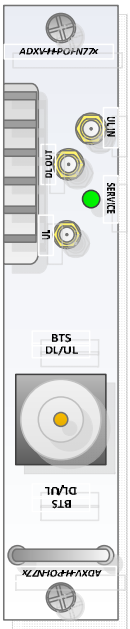

Figure 3-9 POI-N77x front View

- Functions and features
  - Provide RF interface with BTS
  - Each POI has independent gain control and filtering
  - Modular type and hot swappable
  - Supports duplex port and simplex RX port
  - Easily support additional frequency bands by adding a POI
  - Reduces complexity and overall equipment size
- Specifications
  - Size: 1.3 x 17.0 x 6.85 (in)
  - Weight: 6.17lbs

3.1.2 POIL (ADXV-H-POIL-x)

Figure 3-10 POIL front View

- Functions and features
  - Provide RF interface with BTS
  - Each POIL has independent gain control and filtering
  - Modular type and hot swappable
  - Supports duplex port and simplex RX port
  - Easily support additional frequency bands by adding a POIL
  - Reduces complexity and overall equipment size
- Specifications
  - Size: 1.3 x 17.0 x 6.85 (in)
  - Weight: 5.0 lbs

3.1.3 POIL-VU (ADXV-H-POIL-VU)

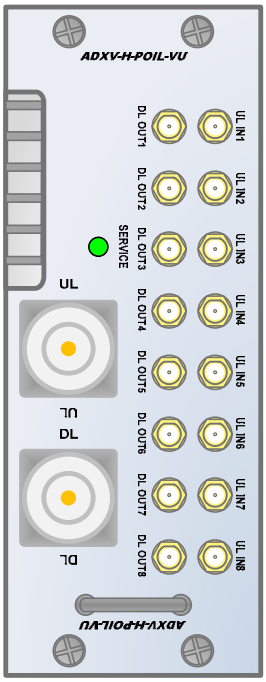

Figure 3-11 POIL-VU front View

- Functions and features
  - Supports VHF/UHF frequency band
  - Provide RF interface with BTS
  - Modular type and hot swappable
  - Supports simplex TX and RX port
- Specifications
  - Size: 2.6 x 17.1 x 6.85 (in)
  - Weight: 8.85 lbs

3.1.3.1 LED

POI has LEDs on the front panel as shown in Figure 3-12.

Figure 3-12 POI LED

Table 3-3 POI LED Specifications

POI		Specifications
Power	Solid Green	POI power is ON and POI/POIL is normal status
	Solid Red	POI power is ON and POI/POIL is hard fail alarm status
	Solid Yellow	POI power is ON and POI/POIL is soft fail alarm status

3.1.3.2 RF Ports

BTS DL/UL, DL OUT, UL IN, E911 Ports (refer to Figure 3-8) are located at the front of the POI

Table 3-4 POI RF port

RF Port	Function
BTS DL/UL	BTS Interface, DL duplexer Input, UL duplexer output
DL OUT	DL output
UL IN	UL input
UL OUT	UL output not passing through duplexer
E911	E911 RF interface (POI &POIL Only)

3.1.4 Channel Combiner (CHC, ADXV-H-CHC)

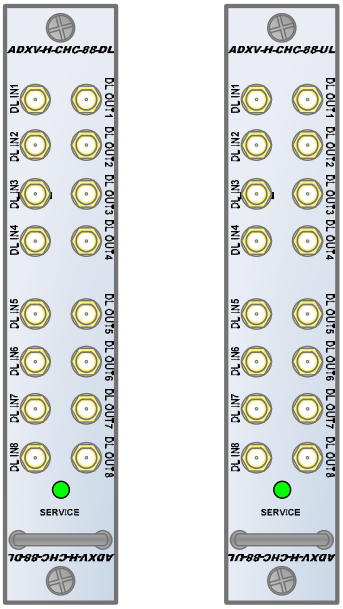

Figure 3-13 ADXV-H-CHC Front View

3.1.5 Channel Combiner (CHC, ADXV-H-CHC-X)

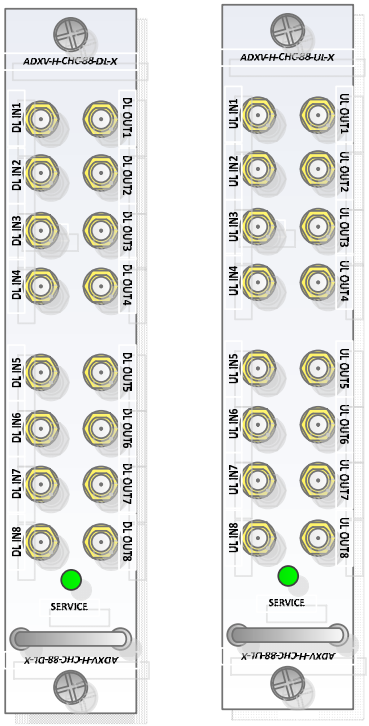

Figure 3-14 ADXV-H-CHC-X Front View

- Functions & Features
  - Combines DL signals received from each POI and feeds the combined signals to the ADXV-H-ODU
  - Combines UL signals received from each RU and feeds the combined signal to the ADXV-H-POI
  - No limit of installation number and location to install POI/POIL, ODU(ODU-X), CHC(CHC-X) card in 12 slots except NMS card
- Specifications
  - Size: 1.3 x 17.0 x 6.85 (in)
  - Weight: 4.4lbs per CHC(CHC-X)

3.1.5.1 RF ports

3.1.5.1.1 RF ports at the front panel (DL 1 to DL 8, UL 1 to UL 8)

DL 1(to DL 8) & UL 1(to UL 8) RF ports are connected to DL OUT/UL IN Ports at the front panel of POI.

- Receive the downlink signal from each POI
- Split the uplink signal received from ODU(ODU-X) to each POI

3.1.5.1.2 RF ports at the back panel (DL 1 to DL 8, UL 1 to UL 8)

DL 1(to DL 8) & UL 1(to UL 8) RF ports are connected to DL IN/UL OUT Ports at the back panel of ODU(ODU-X).

- Transfer the combined downlink signals to ODU(ODU-X)
- Receive the uplink signal from ODU(ODU-X)

3.1.6 Optical Donor Unit (ODU(ODU-X), ADXV-H-ODU-4(ADXV-H-ODU-4X)

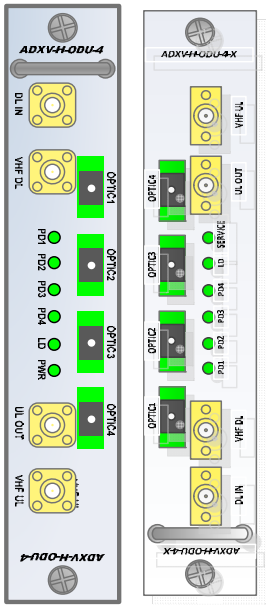

Figure 3-15 ADXV-H-ODU-4(ADXV-H-ODU-4-X) Front view

- Functions & Features
  - Converts signal from RF to optic and transports signals up to a maximum of 10Km (optical 5dBo loss including optical connection loss).
  - One ADXV-H-ODU-4 (ADXV-H-ODU-4-X)supports up to 4 RUs
  - Minimizes the number of optic fiber cable need by transporting multi band signals over a single strand of fiber using WDM technology.
- Spec
  - Size: 1.3 x 17.0 x 6.85 (in)
  - Weight: 5.3lbs

3.1.6.1 LED

The ADXV-H-ODU-4(ADXV-H-ODU-4-X) has the following LEDs on the front panel as shown in Figure 3-16.

Figure 3-16 ADXV-H-ODU-4(ADXV-H-ODU-4-X) LED

Table 3-5 ODU LED Specifications

ADXV DAS-Module		Specifications
PWR	Solid Green	Module power is ON
	OFF	Module power is OFF
LD	OFF	ODU is not installed
	Solid Yellow	LD Fail alarm exists in the ODU
	Solid Green	No LD Fail alarm is present in the ODU
PD1 to PD4	Solid Yellow	PD Fail alarm exists
	Solid Green	No PD Fail alarm is present

3.1.6.2 RF Ports

Figure 3-17 ODU(ODU-X) RF Ports

3.1.6.2.1 DL IN/UL OUT

The combined downlink signal received from ADXV-H-CHC (ADXV-H-CHC-X) is transferred to the DL IN at the back of ODU.

The UL OUT port connects any of the ports on back of the ADXV-H-CHC(ADXV-H-CHC-X) labeled UL 1 ~8.

3.1.6.2.2 VHF DL/VHF UL

VHF DL/UHF UL ports are used to support Public Safety in the VHF & UHF frequency bands. VHF/UHF signals for Public Safety bypass the ADXV-H-CHC and connect directly to the VHF DL/UHF UL ports of the ADXV-H-ODU.

3.1.6.3 Optic Ports

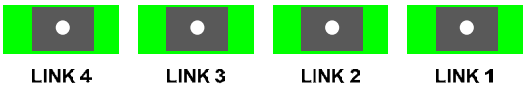

Figure 3-18 ODU Optic Ports

The ADXV-H-ODU4(ADXV-H-ODU4-X) has (4) optic ports and can support up to (4) Main RU's. Likewise, the ADXV-H-ODU1 has (1) optic ports and can support up to (1) Main RU.

3.2 Remote Unit (RU)

- A remote unit (single RU chassis base) is composed of an ORU (Optical Remote Unit), a PSU (Power Supply Unit) and plural band's RM (Remote Module).

- Specifications
  - Size: 19.0 x 15.0 x 7 inches (482 x 380 x 178 mm)
  - Weight: 62.17lbs (28.2 Kg)@4 RM(337F/33S8C/37P/37A), ORU and PSU
  - Power Input: 110VAC(optional) or -48VDC

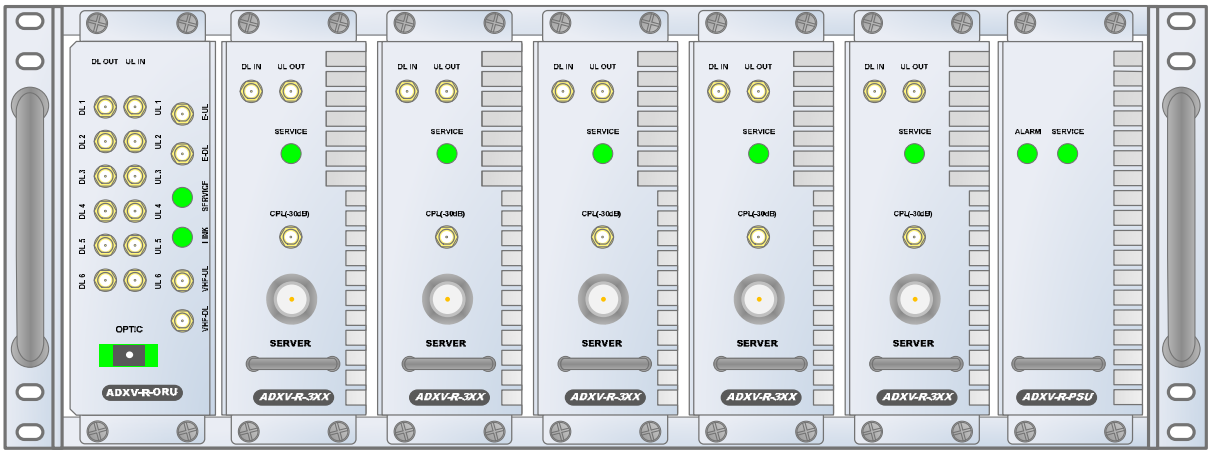

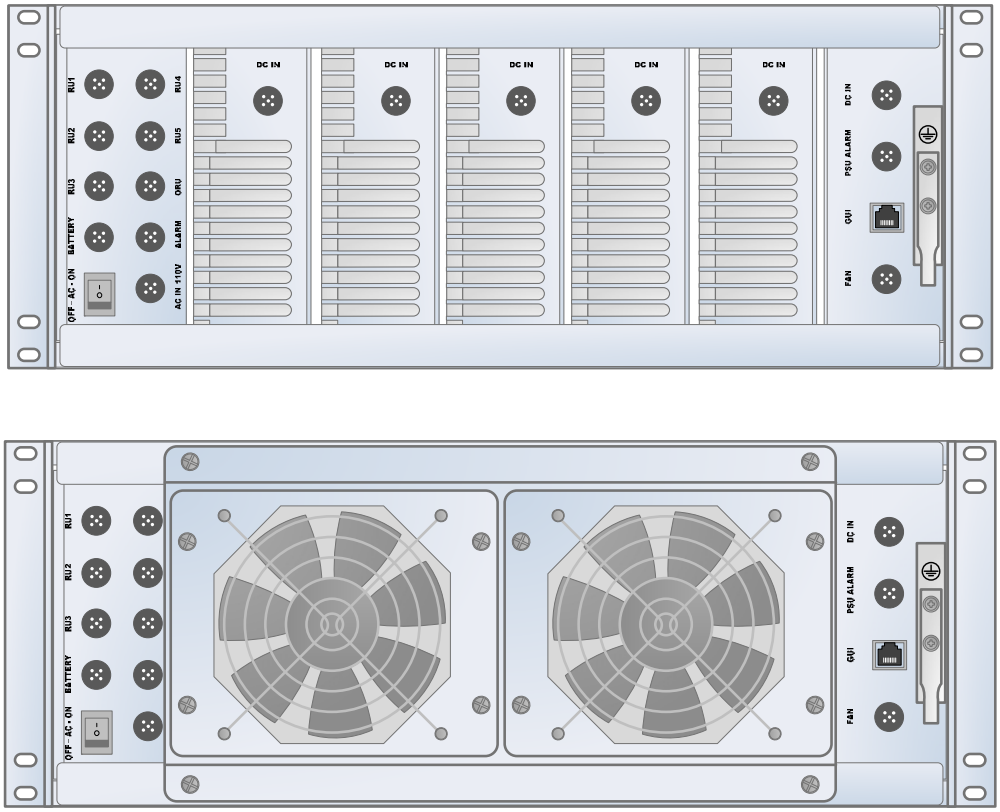

Figure 3-19 ADXV-R Front and Rear (without FAN and with FAN) View

3.2.1 Remote Module (RM, ADXV-R-3xx)

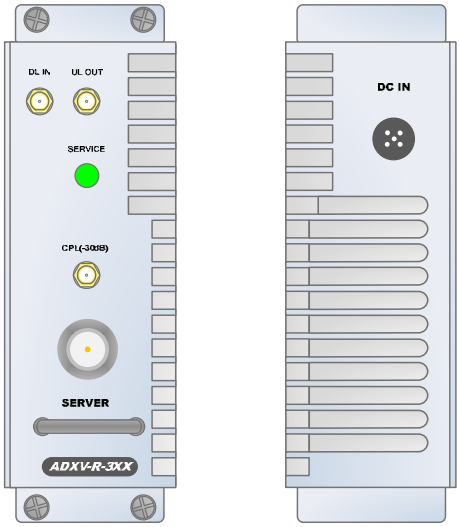

Figure 3-20 ADXV-R-3XX (RM) Front and Rear View

- Spec
  - Size: 2.3 x 13.8 x 6.85 (in)
  - Weight: 9.92 lbs

3.2.2 Remote Module (RM, ADXV-R-337FN)

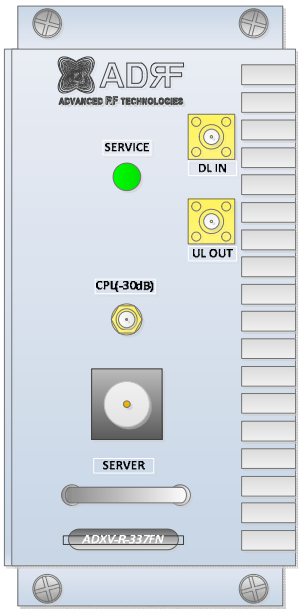

- Spec
  - Size: 3.35 x 13.8 x 6.85 (in)
  - Weight: 11.70 lbs

3.2.3 Remote Module (RM, ADXV-R-37N77L/ ADXV-R-37N77H)

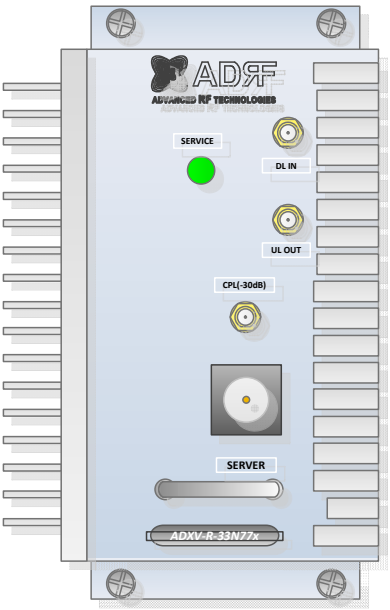

- Spec
  - Size: 3.35 x 13.8 x 6.85 (in)
  - Weight: 11.70 lbs

3.2.3.1 RM ID numbering and RF line connection scheme

RM ID right next to ORU(ORU-X) is RM #1, RM 2nd next is RM #2 and the rest of RMs' ID numbering is in the same order.

With RF connection between ORU(ORU-X) and RM, it is necessary RM ID number should be equal to DL/UL port number of ORU(ORU-X) because of RM ID management and normal serial communication.

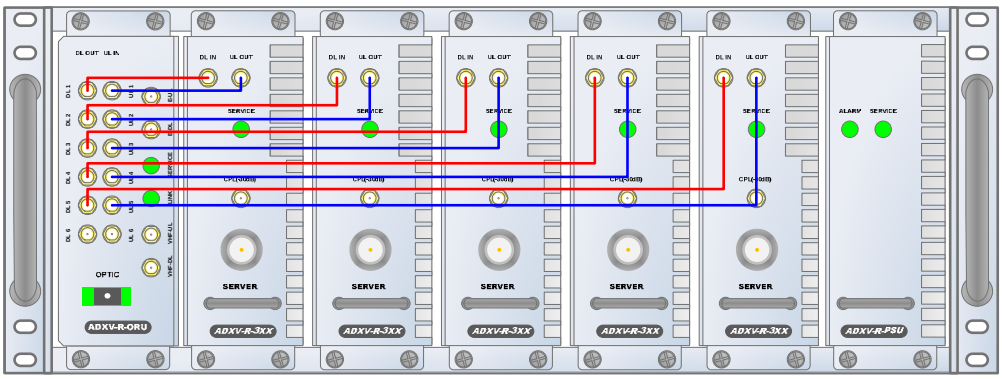

Figure 3-21 RM ID numbering and RF connection between ORU(ORU-X) and RM

3.2.3.2 RF port

DL IN/UL OUT connect to ORU(ORU-X)'s DL port and UL port, it is necessary to connect UL's port number equal to DL's because of serial communication with ORU(ORU-X).

CPL (-30dB): DL output 30dB coupling

SERVER: DL output, UL input, Server Duplexer port

3.2.3.3 Power port

DC IN: Port for power supply (+27VDC) and communication with Controller inside PSU.

3.2.3.4 LED

LED color	Status
Green	Normal
Yellow	Soft fail
Red	Hard fail

3.2.4 Optical Remote Unit (ORU, ADXV-R-ORU)

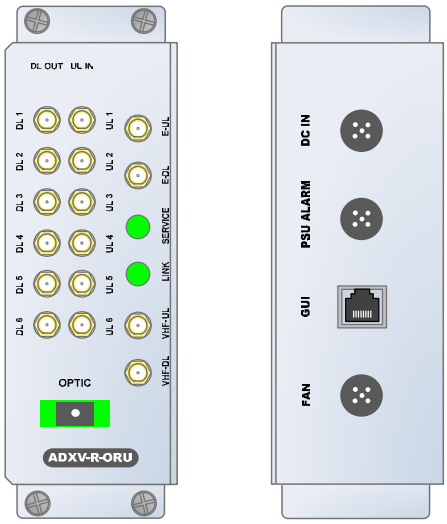

Figure 3-22 ADXV-R-ORU Front and Rear View

- Spec
  - Size: 2.3 x 13.8 x 6.85 (in)
  - Weight: 9.26lbs

3.2.5 Optical Remote Unit (ORU-X, ADXV-R-ORU-X)

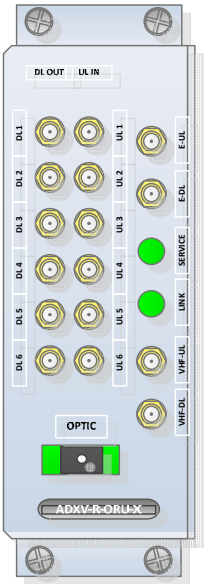

- Spec
  - Size: 2.3 x 13.8 x 6.85 (in)
  - Weight: 9.26lbs

3.2.5.1 Front port

- DL1-DL6: DL port connect to 'DL IN' of RM (Remote Module) (see 3.2.3.1)
- UL1-UL6: UL port connect to 'UL OUT' of RM (Remote Module) (see 3.2.3.1)
- E-DL/E-UL ports connect to external splitter for extension of band RM
- VHF-DL/VHF-UL ports connect to the ADXV VHF/UHF RM
- OPTIC port connects with optic line with waterproof optical connector (provided by ADRF)

3.2.5.2 Rear port

- DC IN port connects to PSU's ORU(ORU-X) port.
- PSU ALARM port connects to PSU's ALARM port.
- GUI port for connection to Lap- top.
- FAN port for connection to FAN unit.

3.2.5.3 LED

LED	LED color	Status
Link	Green	Link normal
	Yellow	Link fail
Service	Green	Normal
	Yellow	Soft fail
	Red	Hard fail

3.2.6 PSU (ADXV-R-PSU)