LEICA M 10

Instructions

FOREWORD

Dear Customer,
Leica would like to thank you for purchasing the Leica M10 and to congratulate you on your choice. With this unique digital 35 mm system camera, you have made an excellent choice.
We wish you a great deal of pleasure and success using your new camera. In order to make best use of all the opportunities, we recommend that you first read these instructions.

Your Leica Camera AG

Meaning of the different categories of information in these instructions

Note:
Additional information

Important:
Failure to observe the instructions may result in damage to the camera, the accessories or the pictures.

Attention:
Failure to observe the instructions may cause personal injury

FOR US ONLY:
This is a Class B product based on the standard of the Voluntary Control Council for Interference from Information Technology Equipment (VCCI). If this is used near a radio or television receiver in a domestic environment, it may cause radio interference. Install and use the equipment according to the instruction manual.

FCC Note:
This equipment has been tested and found to comply with the limits for a Class B digital device, pursuant to Part 15 of the FCC Rules. These limits are designed to provide reasonable protection against harmful interference in a residential installation. This equipment generates, uses, and can radiate radio frequency energy and, if not installed and used in accordance with the instructions, may cause harmful interference to radio communications. However, there is no guarantee that interference will not occur in a particular installation. If this equipment does cause harmful interference to radio or television reception, which can be determined by turning the equipment off and on, the user is encouraged to try to correct the interference by one or more of the following measures:

- Reorient or relocate the receiving antenna.
- Increase the separation between the equipment and receiver.
- Connect the equipment into an outlet on a circuit different from that to which the receiver is connected.
- Consult the dealer or an experienced radio/TV technician for help.

FCC Caution:
To assure continued compliance, follow the attached installation instructions and use only shielded interface cables with ferrite core when connecting to computer or peripheral devices. Any changes or modifications not expressly approved by the party responsible for compliance could void the user's authority to operate this equipment.

Declaration of Conformity

Trade Name:	LEICA
Model No.:	3656
Responsible party/ Support contact:	Leica Camera Inc. 1 Pearl Count, Unit A Allendale, New Jersey 07401 Tel.: +1 201 995 0051 Fax: +1 201 995 1684 technicalinfo@leicacamerausa.com

This device complies with Part 15 of the FCC Rules. Operation is subject to the following two conditions: (1) This device may not cause harmful interference, and (2) this device must accept any interference received, including interference that may cause undesired operation.

3656
Tested to Comply
With FCC Standards
FOR HOME OR OFFICE USE

Contains FCC ID: N5A3656

This transmitter must not be co-located or operated in conjunction with any other antenna or transmitter. This equipment complies with FCC radiation exposure limits set forth for an uncontrolled environment and meets the FCC radio frequency (RF) Exposure Guidelines. This equipment is tested for specific absorption ratio (SAR) and complies with FCC/IC radiation exposure limits set forth for an uncontrolled environment. This device complies with FCC/IC SAR limit of 1.6 W/kg. For body worn operation, this equipment has been tested and meets the FCC/ IC RF exposure guidelines when used with the Leica Camera AG accessories supplied or designated for this product that have no metallic component in the assembly. Use of other accessories may not ensure compliance with FCC/IC RF exposure guidelines.

For Canada only:
CAN ICES-3 (B)/NMB-3(B)

This device complies with RSS-210 of the IC Rules. Operation is subject to the following two conditions:
(1) This device may not cause harmful interference,
(2) This device must accept any interference received,
including interference that may cause undesired operation of the device.
This equipment complies with IC radiation exposure limits set forth for an uncontrolled environment and meets RSS-102 of the IC radio frequency (RF) Exposure rules. This equipment is tested for specific absorption ratio (SAR) and complies with FCC/IC radiation exposure limits set forth for an uncontrolled environment. This device complies with FCC/IC SAR limit of 1.6 W/kg. For body worn operation, this equipment has been tested and meets the FCC/IC RF exposure guidelines when used with the Leica Camera AG accessories supplied or designated for this product that have no metallic component in the assembly. Use of other accessories may not ensure compliance with FCC/IC RF exposure guidelines.

SCOPE OF DELIVERY

Before using your camera for the first time, please check that the accessories supplied are complete.

a. Carrying strap
a. Camera bayonet cover
a. Lithium ion battery Leica BP-SCL5
a. Leica BC-SCL5 charger, incl. mains cable (EU, US) and car charging cable
a. Cover for accessory shoe

Attention:
Store small parts (such as the cover for the accessory shoe) as follows:

- out of reach of children (swallowing can result in suffocation!)
- in a place where they will not be lost, e.g. in the places in the camera packaging designed for this purpose

ACCESSORY

For an up-to-date list and description of the lenses and accessories available for your camera, please consult the Leica Camera AG website at:
www.leica-camera.com

Important:
Use only the accessories specified and described in these instructions and/or by Leica Camera AG with the Leica M10.

SPARE PARTS

	Order No.
Camera bayonet cover	16060
Camera carrying strap	24023
Lithium ion battery BP-SCL5	24003
Battery charger BC-SCL5 (incl. mains cable for US [423-116.001-020] and EU [423-116.001-005], others depending on local market), car charging cable	24002
Cover for accessory shoe, Plastic (black)	420-300.001-035

Subject to changes in design and production.

Notes

- Leica is constantly working on developing and optimizing your camera. As digital cameras have many functions that are purely controlled electronically, some of these improvements and enhancements to the functions can be installed on your camera at a later date. To do this, Leica releases what are known as firmware updates. Cameras are always supplied from the factory with the latest firmware. But you can download it from our website and transfer it to your camera: If you register as an owner on the Leica Camera website, you will be informed by newsletter when a firmware update is available.
  Further information on registration and on firmware updates for your camera and on any changes or additions to the details in this manual can be found on our website under "Customer Service" at: https://owners.leica-camera.com
- The information in these instructions refers to an earlier firmware version. Instructions and explanations of changes due to different firmware versions can also be found in the “Customer area”.
- You can find out which firmware version your camera is fitted with (also see p. 199) as follows:
  Select menu item Camera information, and
  - You will find the relevant number in the sub-menu on the right-hand side of the Camera Firmware line.
- You can find specific country-related approvals for this camera model as follows:
  In the same Camera Information sub-menu (see previous note), select Information on regulations.
  - The relevant approval symbols can be found on several pages of the relevant sub-menu.
- The production date of your camera can be found on the stickers in the warranty card and/or on the packaging. The date is written as follows: Year/Month/Day
- Before using your camera for the first time, please check that the accessories supplied are complete.

INHALT

FOREWORD 114
SCOPE OF DELIVERY 116
ACCESSORY 116
SPARE PARTS 116
WARNING MESSAGES 122
LEGAL INFORMATION 122
Disposal of electrical and electronic equipment 123
PART DESIGNATIONS 124

QUICK START GUIDE 126
PREPARATIONS 126
TAKING PHOTOGRAPHS 126
VIEWING PICTURES 127
DELETING PICTURES 127

DETAILED INSTRUCTIONS 128
PREPARATIONS 128
ATTACHING THE CARRYING STRAP 128
CHARGING THE BATTERY 128
CHANGING THE BATTERY/MEMORY CARD 132
LEICA M LENSES 135
Attaching the lens 137
Detaching the lens 137
THE MOST IMPORTANT SETTINGS/ CONTROLS 138
TURNING THE CAMERA ON AND OFF 138
SHUTTER RELEASE BUTTON 139
Serial exposures 140
SHUTTER SPEED SETTING DIAL 141
MENU CONTROL 142
PRESETS 146
CAMERA DEFAULT SETTINGS 146
Menu language 146
Date and time 146
Auto power off 148
Monitor/viewfinder settings 148

EXPOSURE BASIC SETTINGS 150
LENS TYPE DETECTION 150
Manual lens type/focal length entry 150
FILE FORMAT 152
JPG SETTINGS 152
Resolution 152
Contrast, focus, color saturation 153
Black & white photography 153
WHITE BALANCE 154
ISO SENSITIVITY 156
BRIGHT-LINE VIEW AND RANGE FINDER 158
IMAGE FIELD SELECTOR 159
MONITOR 160
Setting the brightness 160
INFO screen 160
LIVE VIEW MODE 160
Exposure simulation 161
Additional display options 161
RANGE MEASUREMENT 164
With the optical range finder 164
With the monitor image in Live View mode 165
Marking of clearly focused subjects 166
EXPOSURE METERING AND CONTROL 167
Exposure metering displays 167
Exposure Metering Methods 168
Selecting the Live View metering methods 168
Exposure modes 169
Aperture priority 169
Exposure compensation 170
Automatic bracketing 172
Manual exposure setting 174
The B setting/The T function 174
Values above and below the metering range 175

REVIEW MODE 176
Viewing other pictures/Scrolling in the memory 177
Enlarging/Selecting the trimming/
Simultaneously viewing several reduced pictures 178
Create recordings 180
Deleting Images 180
ADDITIONAL FUNCTIONS 182
FLASH MODE 182
TAKING PHOTOGRAPHS WITH THE SELF-TIMER 188
INTERVAL PICTURE SERIES 188
MARKING THE PICTURE FILES FOR COPYRIGHT PROTECTION 189
RECORDING THE LOCATION WITH GPS 190
USER/APPLICATION-SPECIFIC PROFILES 192
RESETTING ALL CUSTOM SETTINGS 193
FORMATTING THE MEMORY CARD 193
FOLDER MANAGEMENT 194
WIRELESS DATA TRANSMISSION AND REMOTE CONTROL
OF THE CAMERA 196
TRANSFERRING DATA TO A COMPUTER 198
WORKING WITH DNG RAW DATA 198
INSTALLING FIRMWARE UPDATES 199
PRECAUTIONS AND CARE INSTRUCTIONS 200
GENERAL PRECAUTIONS 200
MONITOR 201
SENSOR 201
CONDENSATION 201
CARE INSTRUCTIONS 202
FOR THE CAMERA 202
FOR LENSES 202
FOR THE BATTERY 203
FOR THE CHARGER 204
FOR MEMORY CARDS 204
CLEANING THE SENSOR/DUST DETECTION 206
STORAGE 208

TROUBLESHOOTING **208**

APPENDIX **210**

VIEWFINDER DISPLAYS 210

MONITOR DISPLAYS 212

WHEN TAKING A PICTURE 212

IN PLAYBACK MODE 214

FOR MENU CONTROL 215

MENU OPTIONS 216

INDEX **218**

TECHNICAL DATA **220**

WARNING MESSAGES

- Modern electronic components react sensitively to electrostatic discharge. As people can easily pick up charges of tens of thousands of volts, by walking on synthetic carpets for example, a discharge can occur when you touch your camera, particularly if it is placed on a conductive surface. If only the camera housing is affected, this discharge is harmless to the electronics. However, despite built-in safety circuits, outer contacts such as those in the accessory shoe should not be touched if at all possible for safety reasons. We therefore recommend that you always use the relevant cover if you are not using a viewfinder or flash unit.
- For any cleaning of the contacts, do not use an optical micro-fiber cloth (synthetic); use a cotton or linen cloth instead! Before touching the contacts, you can make sure you discharge any electrostatic charge by deliberately touching a heating or water pipe (conductive, grounded material). You can also avoid soiling and oxidization of the contacts by storing your camera in a dry place with the lens or bayonet cover fitted.
- Use only the recommended accessories to prevent faults, short circuits or electric shock.
- Do not attempt to remove parts of the body (covers); qualified repairs can be carried out only at authorized service centers.

LEGAL INFORMATION

- Please ensure that you observe copyright laws. The recording and publication of pre-recorded media such as tapes, CDs, or other published or broadcast material may contravene copyright laws.
- This also applies to all of the software supplied.
- The SD logo is a registered trademark.
- Other names, company and product names referred to in these instructions are trademarks or registered trademarks of the respective companies.

Disposal of electrical and electronic equipment

(Applies within the EU, and other European countries with segregated waste collection systems)

This device contains electrical and/or electronic components and must therefore not be disposed of in general household waste! Instead, it should be disposed of at a recycling collection point provided by the local authority. This costs you nothing. If the device contains standard or rechargeable batteries, these must be removed first and also be disposed of in line with relevant regulations.
Further information on the subject is available from your local administration, your local waste collection company, or in the store where you purchased this device.

CE

Declaration of Conformity (DoC)
Hereby, "*Leica Camera AG*" declares that this product is in compliance with the essential requirements and other relevant provisions of Directive 2014/53/EU.
Customers can download a copy of the original DoC to our R&TTE products from our DoC server:
www.cert.leica-camera.com
In case of further questions, please contact:
Leica Camera AG, Am Leitz-Park 5, 35578 Wetzlar, Germany

This product is intended for general consumer. (Category 3)
This product on purpose to connect to access point of 2.4 GHz WLAN.

The CE identification of our products documents compliance with the fundamental requirements of the applicable EU directives.

PART DESIGNATIONS

Illustrations in the front and rear cover pages

Front view

1 Lens release button
2 Eyelets for the carrying strap
3 Focus button
4 Range finder viewing window
5 Brightness sensor[1]
6 Viewfinder viewing window
7 Self-timer LED
8 Image field selector
9 Bottom cover locking point

Top view

10 ISO dial with detent positions for
- A - Automatic shutter ISO sensitivity
- 100 - 6400 ISO settings
- M ISO - for higher sensitivities

11 Index for ISO setting
12 Fixed ring
a. Index for distance setting
b. Depth of field scale
c. Red index button for changing lenses
13 Aperture setting ring
14 White index point for aperture setting
15 Lens hood
16 Focusing dial
a. Recessed grip
17 Main switch with detent positions for camera switched on (●) and off
18 Shutter release button
a. Thread for cable release
19 Shutter speed dial with detent positions for
- A - Automatic shutter speed control

Shutter speeds [1] /4000 - 8s (inc. intermediate values)
- B - Long-time exposure
- ϟ - Flash sync speed (1/180s)

20 Accessory shoe

1 Leica M lenses with viewfinder attachment cover the brightness sensor. Information about functions with these and other lenses can be found under "Displays/In the viewfinder", and "Leica M lenses".

Rear view

21 LED for indicating picture mode/recording data

22 MENU button
- To call up the FAVORITES menu or the SETUP menu if no function is assigned to the former
- To leave the FAVORITES and SETUP menus, and the sub-menus

23 PLAY button
- To switch the (permanent) view mode on and off
- To return to full-screen display

24 LV button for turning live view mode on and off

25 Wifi aerial (not visible)

26 Brightness sensor for monitor

27 Viewfinder eyepiece

28 Setting dial
- For navigating in the menus
- For setting the selected menu options/functions
- For setting an exposure compensation value
- For enlarging/reducing pictures viewed
- To scroll through saved images

29 Direction pad
- For navigating in the menus
- For setting the selected menu options/functions
- To scroll through saved images
- To approach the desired picture section when using Gray card

30. Center button
- To call up the status display
- For applying menu settings
- For displaying settings/data when taking a picture
- For displaying picture data during picture review

31 Monitor

Bottom view

(bottom cover fitted)

32 Locking toggle for bottom cover

33 Tripod thread A ¼, DIN 4503 (¼“)

34 Bottom cover

(Bottom cover removed)

35 Memory card slot

36 Battery compartment

37 Battery locking slider

QUICK START GUIDE

You will need the following items:
- Camera
- Battery
- Memory card (not supplied)
- Charger and mains cable

PREPARATIONS

1. Charge the battery (see p. 128)
2. Insert the battery (see p. 132)
3. Insert the memory card (see p. 132)
4. Attach the lens (see p. 137)
5. Turn on the camera (see p. 138)
6. Set the menu language (see p. 146)
7. Set the date and time (see p. 146)
8. Format the memory card, if necessary (see p. 193)

TAKING PHOTOGRAPHS

9. Set the shutter speed setting dial to A (see p. 141)
10. Set the subject focus (see p. 158)
11. Turn on exposure metering (see p. 139)
12. Correct the exposure, if necessary (see p. 141)
13. Release the shutter (see p. 139)

VIEWING PICTURES

The camera is preset to display the last picture automatically for a short time (see p. 176).

Switching on permanent view mode (possible at any time):
Press the PLAY button (see p. 176)

Viewing other pictures:
Press the left or right side of the direction pad.

Enlarging pictures:
Turn the setting wheel to the right.

DELETING PICTURES

(only possible within PLAY)
Press the MENU button to call up the delete menu.

Details of this process can be found on p. 180.

DETAILED INSTRUCTIONS

PREPARATIONS

ATTACHING THE CARRYING STRAP

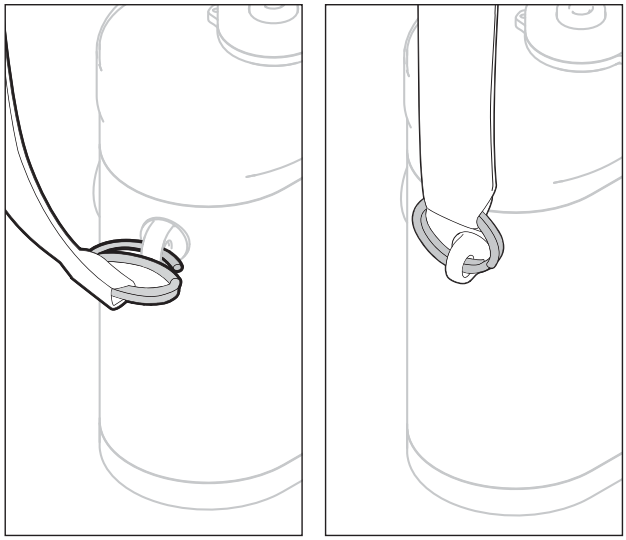

CHARGING THE BATTERY

Charger

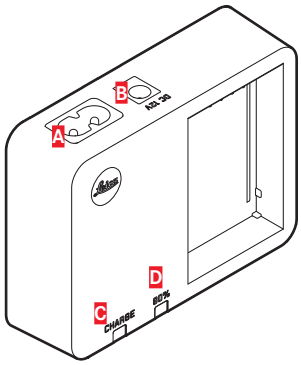

A Socket for power cable
B Socket for car charging cable
C CHARGE LED
D 80% LED

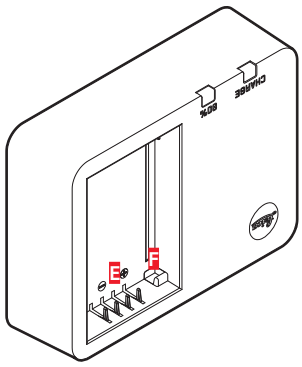

E Contacts
F Latches

Battery
The camera is powered by a lithium ion battery.

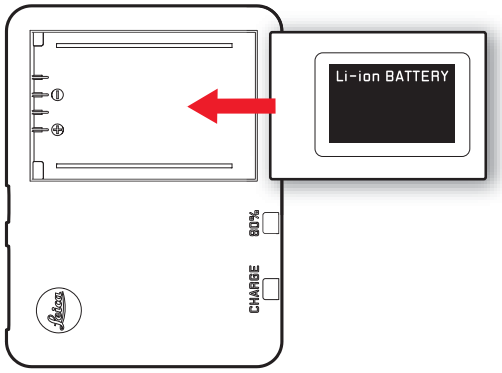

- The green LED marked
  CHARGE starts flashing to confirm that charging is in progress. As soon as the battery has charged to at least 4/5 of its capacity, the yellow LED marked **80%** also lights up. When the battery is fully charged, the green LED also changes from flashing to continuously lit.

Note:
The **80%** LED lights up after around 2 hours due to the charging characteristics.
The charger should be disconnected from the mains when charging is complete. There is therefore no risk of overcharging.

Attention:

- Only the battery type specified and described in this manual (BP-SCL5; Order No. 24003), or battery types specified and described by Leica Camera AG, may be used in this camera.
- These batteries may only be used in the units for which they are designed and may only be charged exactly as described below.
- Using this battery contrary to the instructions and using non-specified battery types can result in an explosion under certain circumstances!
- The batteries must not be exposed to heat or sunlight for prolonged periods, or to humidity or moisture. Likewise, the batteries must not be placed in a microwave oven or a high-pressure container as this results in a risk of fire or explosion!
- A safety valve in the battery guarantees that any excess pressure caused by improper handling is discharged safely. Only the charger specified and described in this manual (BC-SCL5; Order No. 24002) is to be used. The use of other chargers not approved by Leica Camera AG can cause damage to the batteries and, in extreme cases, can cause serious or life-threatening injuries.
- The charger supplied should be used exclusively for charging this battery type. Do not attempt to use it for other purposes.
- The car charging cable supplied must never be connected while the charger is connected to the mains.
- Ensure that the mains outlet used for charging is freely accessible.
- The battery and charger must not be opened. Repairs may only be carried out by authorized service centers.

You will find the date of manufacture on the device itself.
The format is: week/year

Notes:

- The battery should be charged before the camera is used for the first time.
- The battery must have a temperature of 10°-30°C to be charged (otherwise the charger will not turn on, or will turn off again).
- Lithium ion batteries can be charged at any time, regardless of their current charge level. If a battery is only partly discharged when charging starts, it is charged to full capacity faster.
- The batteries warm up during the charging process. This is normal and not a malfunction.
- If the two LEDs on the charger flash rapidly (2Hz) after starting charging, this indicates a charging error (e.g. maximum charging time exceeded, voltages or temperatures outside the permitted ranges, or short circuit). In this case, disconnect the charger from the mains and remove the battery. Ensure that the above temperature conditions are met and then restart the charging process. If the problem persists, please contact your dealer, the Leica office in your country or Leica Camera AG.
- A new battery only reaches its full capacity after it has been fully charged and – by use in the camera - discharged again 2 or 3 times. This discharge procedure should be repeated every 25 cycles. To ensure a maximum service life of the battery, it should not be exposed to constant extremes of temperature (e.g. in a parked car in the summer or winter).
- Even when used under optimum conditions, every battery has a limited service life! After several hundred charging cycles, this becomes noticeable as the operating times get significantly shorter.
- The battery should be replaced after a maximum of four years, as its performance deteriorates and reliable operation can no longer be guaranteed, particularly in cold conditions.
- Defective batteries should be disposed of according to the respective instructions (see p. 123).
- The replaceable battery supplies another back-up battery that is built into the camera, ensuring uninterrupted operation of the internal clock and calendar for up to 2 months. If this back-up battery becomes discharged it must be recharged by inserting the replaceable main battery. Once the replaceable battery has been inserted, the full capacity of the back-up battery is recovered after about one or two days. This process does not require the camera to be turned on.

CHANGING THE BATTERY/MEMORY CARD

Turn the camera off using the main switch 16.

Important:
Do not open the bottom cover or remove the memory card or battery while the red LED 21 at the bottom right next to the monitor 31 is flashing, indicating picture recording and/or data saving to the card. Otherwise the unsaved (or not completely saved) picture data may be lost.

Removing the bottom cover

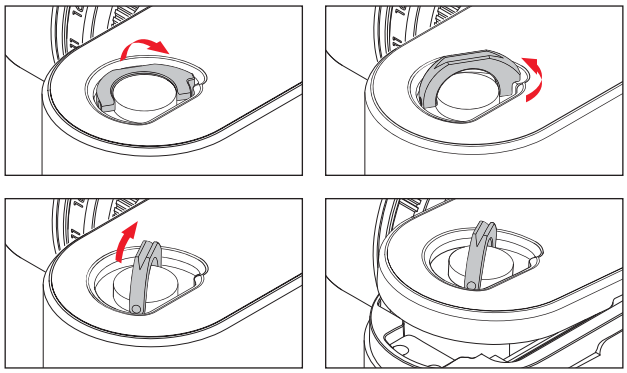

Inserting the battery

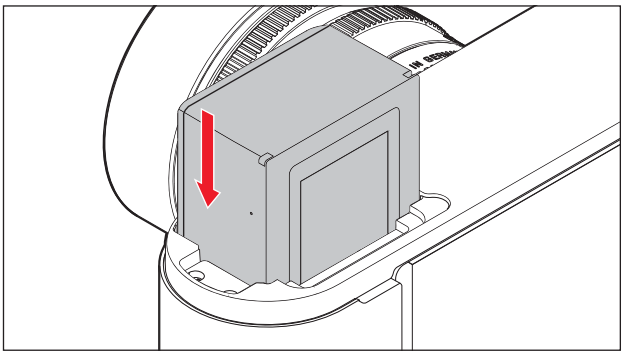

Removing the battery

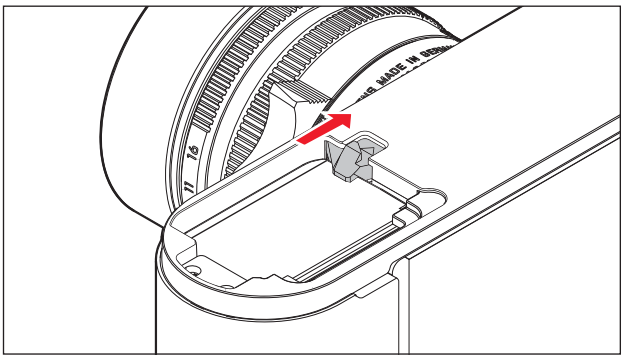

Charge level displays

In Live View mode (see p. 160) the battery charge level is displayed in the monitor 31 by pressing the Center button 30.

Notes:

- Remove the battery if you will not be using the camera for a long period of time.
- A maximum of 2 months after the capacity of a battery left in the camera is exhausted (see also the last note under “Charging the battery”, p. 128), the date and time need to be re-entered.
- As the battery capacity deteriorates or if using an older battery, warning messages and displays may appear and functions may be restricted or blocked, depending on the function being used.

Compatible memory cards

The camera saves the pictures on an SD (secure digital), SDHC (high capacity), or SDXC (eXtended capacity) card.
SD/SDHC/SDXC memory cards are available from various suppliers and with different capacities and read/write speeds. Particularly those with high capacities and read/write speeds allow data to be recorded and retrieved very quickly.
The cards have a write protection switch, which can be used to prevent unintentional storage and deletion of pictures. This switch takes the form of a slider on the non-beveled side of the card; in the lower position, marked LOCK, the data on the card is protected.

Notes:

- Do not touch the memory card contacts.
- Memory cards with a capacity of less than 1GB cannot be used. Cards with capacities between 1GB and 2GB must be formated prior to first use in the camera.
- The use of memory cards with integrated Wifi is not recommended because it can reduce the performance of the built-in Wifi.

Inserting the memory card

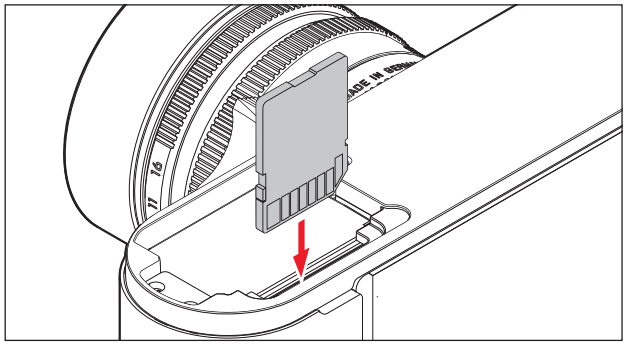

Removing the memory card

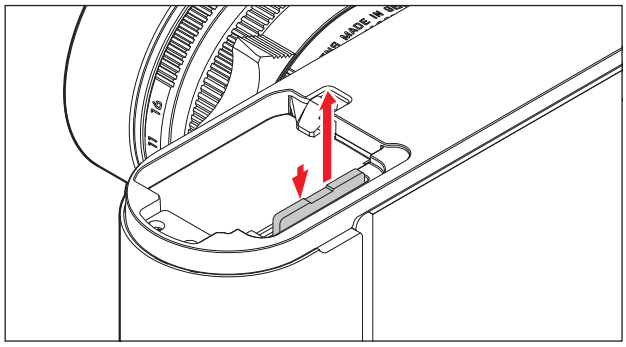

Notes:

- The range of SD/SDHC/SDXC cards is too large for Leica Camera AG to be able to completely test all available types for compatibility and quality. Although using other card types is not likely to damage the camera or the card, some cards do not comply with the SD/SDHC/SDXC standards and Leica Camera AG is unable to provide any guarantee that they will function correctly.
- If the memory card cannot be inserted, check that it is aligned correctly.
- If you remove the bottom cover or take out the memory card when the camera is turned on, the monitor displays the corresponding warning messages instead of the normal displays:
  - Caution Bottom cover open
  - Attention No card inserted.
- Since electromagnetic fields, electrostatic charges, and defects on the camera or the card can lead to damage or loss of the data on the memory card, we recommend that you also transfer the data to a comptuer and save it there (see p. 198).
- For the same reason, it is recommended that the card is always stored in its antistatic cover.

LEICA M LENSES

As a rule: most Leica M lenses can be used. Details on the small number of exceptions and restrictions can be found in the following notes.
They can be used regardless of the lens features, and whether it does or does not have 6-bit coding in the bayonet.
Even without this additional feature, i.e. when using Leica M lenses without identification, the camera will deliver excellent pictures in most situations.
To ensure optimum picture quality in these situations, we recommend entering the lens type (see p. 150).

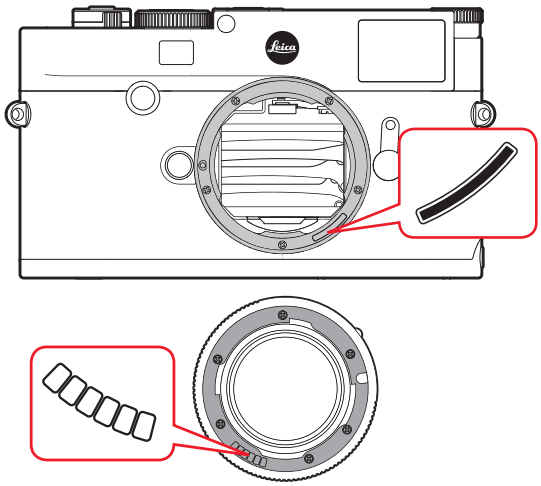

Important:

- The following cannot be used:
  - Hologon 1:8/15mm,
  - Summicron 1:2/50mm with close-up,
  - Elmar 1:4/90mm with retractable tube (manufactured from 1954-1968)
  - Some versions of the Summilux-M 1.4/35mm (not aspherical, manufactured from 1961-1995, Made in Canada) cannot be fitted to the camera or will not focus to infinity. The Leica Customer Care department can modify these lenses so that they can be used on the camera.

- **The following can be used, but risk damaging the camera or lens:**
  Lenses with retractable tube can only be used with the tube extended, i.e. their tube must never be retracted into the camera. This is not the case with the current Macro-Elmar-M 1:4/90mm, as its tube does not protrude into the camera body even when retracted. It can therefore be used without any restrictions.
- **The following can be used with restrictions**
  Despite the high precision of the range finder on the camera, exact focusing with 135mm lenses with an open aperture cannot be guaranteed due to the very low depth of field. Therefore, stopping down by at least 2 stops is recommended. By contrast, Live View mode and the various setting facilities allow unrestricted use of this lens.

- **Can be used, but exposure metering only possible in Live View mode**
  - Super-Angulon-M 1:4/21mm
  - Super-Angulon-M 1:3.4/21mm
  - Elmarit-M 1:2.8/28mm with serial Nos. before 2 314 921.

Notes:

- The Leica Customer Care department can retrofit many Leica M lenses with 6-bit coding. (Address, s. p. 224).
- In addition to Leica M lenses with and without coding, Leica R lenses can also be used in combination with the Leica M adapter R available as an accessory. Please visit the Leica Camera AG website for more information on these accessories.
- Leica M leses are fitted with a control curve that mechanically transfers the set distance to the camera, thus enabling manual focusing with the viewfinder of the Leica M camera. When using the viewfinder with wide-aperture lenses (≥ 1.4) the following must be borne in mind: The focusing mechanism of every camera and every lens is adjusted individually in the Leica Camera AG factory in Wetzlar with the greatest possible precision. Extremely narrow tolerances are adhered to in this process, which enable precise focusing of every camera/lens combination in photographic practice.
  If wide-aperture lenses (≥ 1.4) are used with an open aperture, due to the sometimes extremely low depth of field and inaccuracies in focusing with the viewfinder there may be setting errors resulting from the (added) overall tolerance of the camera and lens. When viewed critically, it therefore cannot be ruled out that a certain camera/lens combination manifests systematic deviations. If a general deviation of the focal position in a certain direction can be seen in photographic practice, it is recommended that the camera and the lens be checked by the Leica Customer Care department. The staff there can once again check whether the two products are adjusted within the permitted overall tolerance. Please understand that a 100% match of the focal position can be achieved for all pairings of cameras and lenses.
  For this reason, we therefore recommend in such cases that you use the Live View function with the appropriate setting facilities.

Attaching the lens

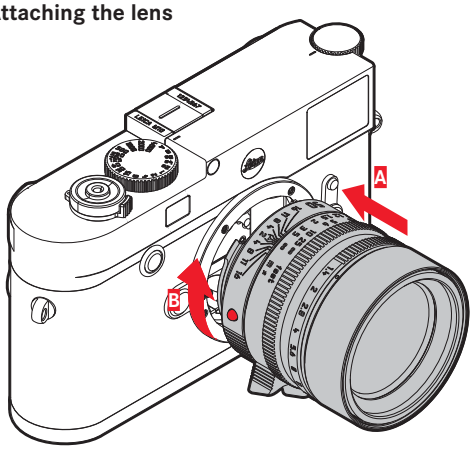

1. Turn off the camera
2. Hold the lens at the fixed ring 11
3. Align the red index button 11c on the lens with the release button 1 on the camera housing
4. In this position, insert the lens straight
5. Turn the lens slightly to the right, and you will hear and feel it click into place.

Detaching the lens

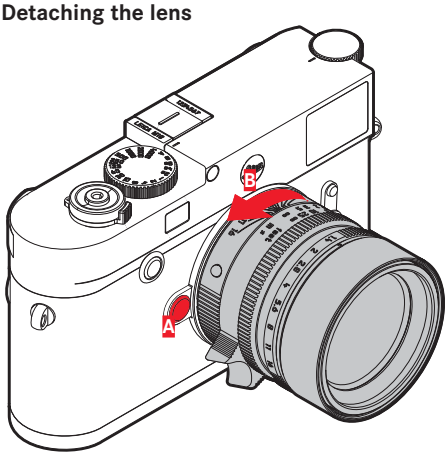

1. Turn off the camera
2. Hold the lens at the fixed ring 11
3. Press down the release button 1 on the camera body
4. Turn the lens to the left until its red index button 11c is aligned with the release button
5. Remove the lens

Notes:

- As a rule: To protect against ingress of dust etc. into the interior of the camera, it is important always to have a lens or a cover fitted to the camera body.
- For the same reason, when changing lenses work quickly and in an environment that is as dust-free as possible.
- Camera or lens rear covers should not be stored in your pants pocket as they attract dust that can get into the camera when they are fitted.

THE MOST IMPORTANT SETTINGS/ CONTROLS

TURNING THE CAMERA ON AND OFF

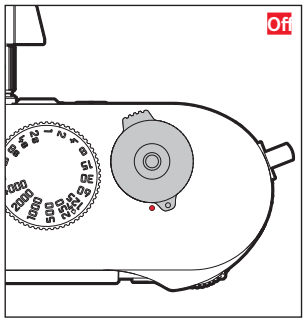

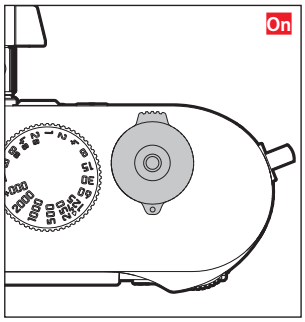

The camera is turned on and off using the main switch 17. This is below the shutter release button and is a detent lever.

Switching on
After switching on, the LED 21 lights up briefly and the displays in the viewfinder appear.

Note:
After switching on, the camera is ready to use after approx. 1s.

Switching off
Even if the camera is not switched off with the main switch, it is switched off automatically if an automatic power off time has been set in the menu (see p. 148), and none of the controls are used during this time.
However, if the automatic power off time is set to Off, and the camera is not operated for an extended period, it should always be switched off with the main switch to rule out accidental photographs being taken and the battery being discharged.

SHUTTER RELEASE BUTTON

The shutter release button 18 has two pressure points:

1. Pressing down (=to the 1st ressure point)
   - activates the camera electronics and viewfinder display
   - saves the metered exposure value in aperture priority mode, i.e. the shutter speed determined by the camera (for more details, refer to the "Metering memory lock" section on p. 170)
   - restarts a self-timer delay that is already in progress.

   If the shutter release button is pressed down to this pressure stage, the display stays on.
   If the camera had switched itself off, it is activated again and the display is switched on.
   If review mode or menu control had been activated, the camera reverts to picture mode.
   After the shutter release button has been released, the camera electronics and viewfinder displays remain switched on for as long as has been set in the menu item Automatic power off (see p. 148)

Note:
The shutter button remains blocked
- if the internal buffer memory is (temporarily) full, e.g. after a series of ≥16 pictures.
- if the memory card inserted and the internal buffer memory are (temporarily) full.
- if the battery has exceeded its performance limits (capacity, temperature, age)
- if the memory card is write-protected or damaged.
- if the Image numbering on the memory card has been exhausted.
- if the camera requests entry of language, date and time when being used for the first time or after resetting all settings.
- if the sensor is too hot.

2. Pressing the shutter release button all the way down takes the picture or starts a preselected self-timer delay time. The data is then transferred to the memory card.

Note:
To avoid wobble, the shutter button should be pressed gently, not jerkily, until the shutter is released with a soft click.

The shutter button has a standard thread 18a for a cable release.

Serial exposures

In the factory settings, the camera has been set to single pictures, but you can also take serial exposures, e.g. to shoot sequences of movement in several stages. Use Menu control to set in advance whether you want to take single or serial pictures.

Setting the function

1. Select menu option Picture sequence, and
2. in the sub-menu Single picture or Serial exposures.

After you have made the setting, serial exposures will be taken for as long as you keep the shutter release button 18 fully pressed down (and there is sufficient capacity on the memory card). If you only press it briefly, the camera continues to take single pictures.

Approx. 40 pictures (in JPG format) can be taken in rapid succession at a maximum rate of approx. 5 pictures per second. After this, the image frequency is reduced slightly.

Notes:

- The specified picture frequency and the maximum possible number of pictures in a series relate to a default setting – ISO 200 and JPEG fine format. With different settings, or dependng on the picture content, white balance setting and the memory card used, the frequency and number may be lower.
- Regardless of how many pictures have been taken in a series, both review modes initially show the last picture in the series or the last picture in the series saved n the currently active card while saving is still ongoing.

SHUTTER SPEED SETTING DIAL

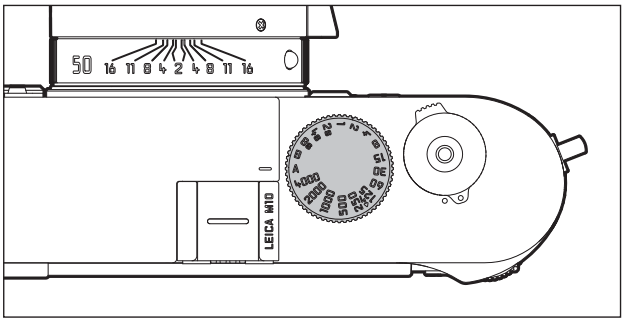

The exposure modes are selected using the shutter speed dial 19,

- Aperture priority mode by setting the **A** position marked red,
- Manual mode by selecting a shutter speed of 1/4000s to 8s (intermediate values in ½ step positions are also available);
- the shortest possible sync speed of 1/180s for flash mode, marked with the ϟ symbol, and
- **B** for long exposures.

The Leica M shutter speed dial has no stop, i.e. it can be turned in either direction from any position. It detents at all marked positions and at the intermediate values. Values between the detent positions cannot be used. More details on setting the correct exposure can be found in the sections from p. 167.

MENU CONTROL

Many settings on the camera are controlled using Menu control. Entry into Menu Control varies, depending on whether the menu items have been assigned to the FAVORITES menu or not:
In the factory setting, and whenever at least one menu item has been assigned to this menu area, it acts as the 'Start Page', i.e. in these cases enter via this FAVORITES menu.
The 'main area' of the menu - the SETUP menu - always contains all menu options. In the cases outlines above, it can only be accessed from the FAVORITES menu. However, if no menu option has been assigned to the latter, entry is direct from the SETUP menu.

You can assign up to 7 of the 26 menu options from the SETUP menu to the FAVORITES menu. This enables the most frequently used menu options to be accessed and set especially quickly and easily. Details about this menu option can be found on the following pages.

The relevant settings or setting steps of the menu options are made in the same way in both menus. When the camera is turned on, an overview of the relevant settings and step-by-step instructions for setting these options can be viewed in the monitor 31.

Calling up menu control
FAVORITES menu

Press the MENU/SET button 22

- The FAVORITES menu appears. In addition to the variable items, the bottom line always contains the SETUP item. The active option when a menu is selected is always the option that was last used.

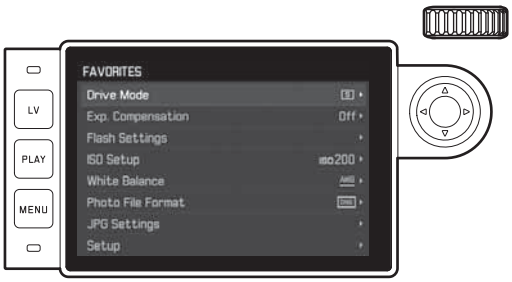

SETUP-Menu

If menu items have been assigned to the FAVORITES menu:

1. Press the MENU/SET button 22
2. Use the setting wheel 28 or top/bottom side of the direction pad 29 to select SETUP

3. Press the Center button 30 or the right-hand side of the direction pad
   - The first page of the SETUP menu appears.

If no menu options are assigned to the FAVORITES menu:
Press the MENU/SET button 22

- The first page of the SETUP menu appears.

Selecting a menu option

1. Selecting the desired menu option:
   - Turn the setting wheel 28 (to the right = down, to the left = up)

   or
   - Press the top or bottom side of the direction pad 29

Notes:

- Using the setting wheel is normally not only more convenient but also significantly faster.
- Some options, such as GPS and Format memory card, as well as some sub-menu options, can only be called up in certain situations. Further explanations can be found in the relevant sections. This is indicated by the lettering in the corresponding lines being grayed out.

Setting the menu function

2. Calling up the relevant sub-menu:
   - Press the Center button 30

   or
   - Press right on the direction pad 29

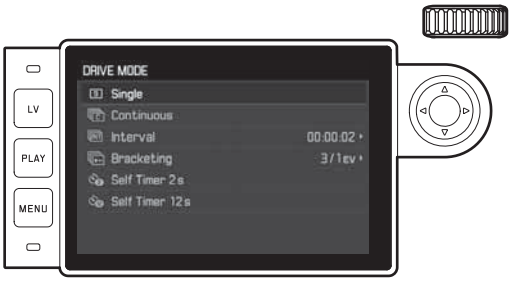

- The current menu option is displayed in the header.
  The sub-menus usually consist of different numbers of function options, which can be directly selected in the next step.
  In some cases, there is also a scale for setting values, or the sub-menus consist of secondary entries for which function options can be selected in turn.

Note:
The menu option GPS is the only option not to have its own sub-menu. Details on setting can be found on page 190.

3. Select the desired function variant/value:
   - Turn setting wheel 28 in the appropriate direction

   or
   - Press the appropriate directions on the direction pad 29, up/down to change lines or to select options, left/right for settings within a line or on a scale.
     For sub-menus with selectable options, it is also possible to change line using the Center button 30.

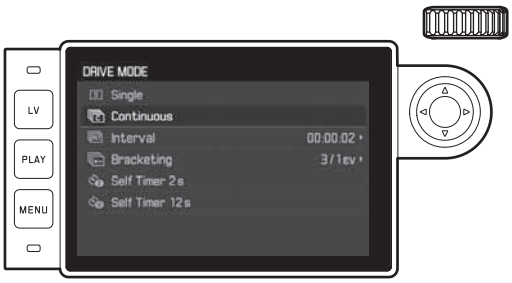

Note:
Options such as Date & Time and the Exposure bracketing and White balance functions require additional settings. The corresponding explanations, as well as further details about the other menu functions, can be found in the relevant sections.

Save the settings

Press the Center button 30

- The monitor screen reverts to its initial condition. The new function option set is then shown on the right of the corresponding menu line.

Leaving Menu control

You can exit the menus and sub-menus at any time - without applying the settings made - by pressing the shutter release 18, PLAY 23 and MENU 22 buttons.

Managing the FAVORITES menü

For the max. 7 menu options that you can assign to the FAVORITES menu, almost all of the menu options of the SETUP menu are available (see p. 216 for a complete list).

1. Select Individual Settings in the SETUP menu,
2. select Favorites in the relevant sub-menu, and
3. call up the sub-menu.

4. Select the desired menu option, and
5. press on the Center button 30 to add it to the FAVORITES menu – On, or remove it - Off.
   - A warning message appears if the FAVORITES menu already contains 7 options when you try to add a menu option to it.

Note:

If you switch all menu options Off in step 5, the FAVORITES menu is also deleted as a whole. Correspondingly, in such cases, as described on p. 142, the SETUP menu appear as soon as you call up menu control by pressing the MENU button.

PRESETS

CAMERA DEFAULT SETTINGS

Note:
When switching the camera on for the first time, or when switching on again after a reset to factory settings (see p. 193), or after a firmware update, the two menu options below appear automatically.

Menu language

The camera is set to English by default. German, French, Italian, Spanish, Portuguese, Russian, Japanese, Korean and Traditional or Simplified Chinese can all be selected as alternative menu languages.

Setting the function

1. Select menu option Language, and
2. select the desired language in the sub-menu.
   - Apart from a few exceptions (button names, short designations), all linguistic information changes.

Date and time

Setting the functions

1. Select menu option Date & Time, and
2. call up the sub-menu. It comprises the five options Auto GPS time, Time zone, Daylight saving time, Setting date, and Setting time.

Note:
We recommend that you make the following three settings in the stated order.

For correct time display anywhere in the world:

3. In the Date/time sub-menu, select Time zone, and
4. select the relevant zone/your current location in the sub-menu.
   - The current set difference from Greenwich Mean Time is shown on the left of the line, with large cities and the current time in the relevant time zones on the right.

Entering the correct time in countries with seasonal time changes:

5. In the Date & time sub-menu, select Daylight saving time, and
6. set the preferred option (On/Off).

Note:
Time zone and Daylight saving time are available only when the Auto GPS time is switched off.

Adjusting the time:

7. In the Date & time sub-menu, select Setting time.
8. In the sub-menu, in the top Time format line, select the desired display format, in the bottom line hours, minutes and am or pm (only possible together with the 12 hour format).
   - Activating the relevant setting:
     Press right or left on the direction pad
     - The selected position is underlined in red.
   - Setting:
     Turn the setting wheel or press the top or bottom side of the direction pad

Automatic time display controlled by GPS
This menu option is available only if the electronic viewfinder with an integrated GPS aerial is attached (available as an acessory), and the GPS option is switched on in the menu (see p. 190).

9. In the Date & time sub-menu, select Auto GPS time, and
10. switch the function On or Off there.

If this function is activated, the time set on the camera is updated continuously based on GPS signals received.

Adjusting the date:
There are 3 options available for the sequence of the date.

3. In the Date & time sub-menu, select Setting date.
4. In the relevant sub-menu, in the top Date format line, select the desired display format, in the bottom line year, month and day.
   - Activating the relevant setting:
     Press right or left on the direction pad.
     - The selected position is underlined in red.
   - Setting:
     Turn the setting wheel or press the top or bottom side of the direction pad.

Note:
Even if no battery is inserted or the battery is flat, an integrated back-up battery retains the date and time setting for around 2 months. After this time they must be set again as described above.

Auto power off

This function turns the camera off automatically after a preset time.

Setting the function

1. Select the menu option Automatic power off, and
2. select the desired duration in the sub-menu or switch the function Off.

Note:
Even if the camera has been switched off by this function, it can be started again at any time by pressing the shutter release button 18.

Monitor/viewfinder settings

Switching between monitor and viewfinder

If you are using the viewfinder available as an accessory, you can specify both for the Live View and the Review mode, when the monitor or the viewfinder should be used for the displays in question. In the factory settings, the change is automatic (using the proximity sensor in the viewfinder eyepiece)

Setting the function

1. Select menu option EVF/Monitor switching, and
2. in the sub-menu Review screen (for the Review mode) o r LV screen (for the Live View mode).
3. In both associated sub-menus, either select Auto, or whether the displays in question should be only on the monitor - Monitor, or only in the viewfinder - EVF.

EXPOSURE BASIC SETTINGS

LENS TYPE DETECTION

The 6-bit coding in the bayonet fastening of current Leica M lenses allows the camera to identify the type of lens fitted using the sensor in the bayonet socket.

- Among other things, this information is used to optimize the picture data. Thus edge darkening which can be noticeable with wide-angle lenses and large apertures can be compensated in the corresponding picture data.
- Flash exposure and reflector control also use the lens data (see “Compatible flash units”, p. 182).
- In addition, the information provided by this 6-bit coding is written to the EXIF data for the picture. When displaying extended image data, the lens focal length is also shown.

Setting the function

1. Select menu option Lens type detection, and
2. in the sub-menu the desired version:
   - OFF, or
   - Auto, if a coded Leica M lens is attached, or
   - Manual M/Manual R, if a non-coded Leica M lens is attached/a Leica R lens is being used with a Leica R adapter M (available as an accessory, for further details, refer to the adapter manual).

Notes:

- When attaching a coded Leica M lens, the camera automatically switches to Auto, even if a different lens had previously been entered in Manual M.
- When using Leica R lenses, the camera automatically switches to Manual R, even if Auto had previosuly been entered.
- When using Leica M lenses without coding, Auto should not be used to avoid malfunctions, i.e. in these cases, the lens type used should always be entered manually.

Manual lens type/focal length entry

Earlier Leica M lenses will not be recognized by the camera due to a lack of coding. However, they can be entered via the menu.
The same applies to Leica R lenses.

3. In the sub-menu select Manual M/Manual R, and
   - The monitor shows the relvant list of lenses, which also includes the relevant item numbers to ensure clear identification. The camera detects whether an M lens is attached, or a Leica R lens using the adapter. The list contains either only M or only R lenses accordingly.
4. Select the lens used from the relevant list.

Notes on Leica M lenses:

- On many lenses, the item number is engraved on the reverse side of the depth of field scale.
- The list contains lenses that were available without coding (prior to around June 2006). Lenses introduced more recently are only available with coding and therefore cannot be selected manually.
- When using the Leica Tri-Elmar-M 1:4/16-18-21mm ASPH., the set focal length is not transferred to the camera and thus is not included in the EXIF data for pictures. If required, you can enter the relevant focal length manually.
- By contrast, the Leica Tri-Elmar-M 1:4/28-35-50mm ASPH features mechanical transfer of the set focal length to the camera, necessary to display the appropriate bright line frame in the viewfinder. It is detected by the camera electronics and used for focal length specific compensation. However, only one item number - 11 625 - is listed in the menu for reasons of space. Of course, the other two versions - 11 890 and 11 894 - can be used and the settings made in the menu also apply to them.

FILE FORMAT

The picture data is recorded either
a. in the JPG file format, or
b. in the DNG file format, or
c. simultaneously with both formats, i.e. two files are always created per picture.

On the one hand this allows you to take account of the intended usage and the available memory card capacity, and on the other hand provides the security and flexibility essential for deciding on the usage later.

Setting the function

1. Select the menu option File format, and
2. and select the desired format combination in the sub-menu.

Notes:

- The standardized DNG (Digital Negative) format is used for storage of unprocessed raw picture data.
- If the picture data is being saved simultaneoulsy as DNG and JPG, the existing resolution setting for the JPG format is used (see next Section), i.e. the two files can have different resolutions.
- The remaining number of pictures shown in the monitor does not necessarily change after every picture. This depends on the subject; very fine structures result in higher quantities of data, homogeneous surfaces in lower quantities.

JPG SETTINGS

Note:

The functions and settings described in this section refer exclusively to picture data in the JPG format. If the DNG file format is specified these settings have no effect as in this case the image data is always saved in its original form.

Resolution

The picture data can be recorded in JPG format at four different resolutions. This allows you to adjust the setting precisely to the intended use or to the available memory card capacity. At the highest resolution (which also means the largest data volume), which you should select for optimum quality for large prints, a card can hold significantly fewer pictures than at the lowest resolution.

Setting the function

1. Select menu option JPG EINSTELLUNGEN,
2. selct JPG resolution in the sub-menu, and
3. select the desired resolution in the relevant sub-menu.

Contrast, focus, color saturation

In digital photography, key picture properties, other than resolution, can be changed very easily. While photographic software – after recording and transfer to a computer – provides great scope for doing this, the camera itself allows you to influence three of the most important picture properties even before taking the picture:

- The contrast, i.e. the difference between light and dark areas, determines whether a picture has a more “matt” or “glossy” effect. As a consequence, the contrast can be influenced by increasing or reducing this difference, i.e. by lighter reproduction of light sections of the image and darker reproduction of dark sections.
- Sharp reproduction – at least of the main subject – using the correct distance setting is a prerequisite for a successful picture. In turn, the impression of sharpness of a picture is to a great extent determined by the sharpness of the edges, i.e. by how small the transition area between light and dark is at the edges in the picture. The impression of being in focus can thus be changed by expanding or reducing these areas.
- The color saturation determines whether the colors in the picture tend to appear as "pale" and pastel-like or "bright" and colorful. While the lighting and weather conditions (hazy/clear) are given as conditions for the picture, there is definite scope for influencing the reproduction.

All three picture properties can be set independently of each other to three different levels so that you can set the optimum values for any situation and/or your ideas.

Setting the functions

1. Selet menu option JPG SETTINGS,
2. select Contrast, or Sharpness, or Saturation in the sub-menu, and
3. select the desired setting in the sub-menu.

Note:
In DNG format, the resolution is 24MP, i.e. regardless of any different setting made for JPG format.

Black & white photography

If you save your pictures in the JPG format (as well), you can choose whether you want to save them in color or black & white.

Setting the functions

1. Selet menu option JPG EINSTELLUNGEN,
1. select Monochrome in the sub-menu, and
2. switch the function On or Off there.

Note:
When using Monochrome, the sub-menu option Saturation is not available (=’grayed out’)

WHITE BALANCE

In digital photography, white balance ensures neutral rendition of color in any light. It is based on the camera being preset to reproduce a particular light color as white.
You can choose from ten different settings:

- Auto – for automatic control, which delivers neutral results in most situations,
- Eight fixed presets for the most frequent light sources:
  - Daylight - e.g. for outdoor pictures in sunshine.
  - Cloud - e.g. for outdoor pictures with cloudy skies.
  - Shadow - e.g. for outdoor pictures with the main subject in shadow.
  - Artificial light - e.g. for indoor pictures with (prevailing) incandescent lamp light.
  - Fluorescent lamp Warm - e.g. for pictures with (prevailing) light from fluorescent tubes, for example for homes with warm light similar to incandescent lamps at approx. 3700K[1]
  - Fluorescent lamp Cool - e.g. for pictures with (prevailing) light from fluorescent tubes, for example for working areas and external lighting with cool light at approx. 5800K[1]
  - Flash - e.g. for pictures with electronic flash lighting.
- Gray card – for manual setting by metering.
- Color temperature[1] – for a directly adjustable color temperature value.

Note:
Setting to Auto allows the white balance to be adjusted for correct color reproduction when using an electronic flash unit that satisfies the technical requirements of System 3000 System Camera Adaption (SCA) and has an SCA-3502-5 adapter or a corresponding integrated foot.
However, if other flash units are used, which are not specially designed for the camera and do not automatically adjust the white balance, the Flash setting should be used.

Setting the function
For automatic or fixed settings

1. Select the menu option White balance, and
2. select the desired function in the sub-menu.

[1] All color temperatures are specified in Kelvin.

For direct setting of color temperature

You can directly set values between 2000 and 13100 (K) (from 2000 to 5000K in increments of 100, from 5000 to 8000K in increments of 200 and from 8000 to 13100K in increments of 300). This provides you with a broad scope, covering almost all color temperatures that can occur in practice and within which you can adapt the color reproduction very sensitively to the existing light color and/or your personal preferences.

1. Select the menu option White balance,
2. in the sub-menu select the Color temperature option.
3. use the setting dial 28 or press up/down on the direction pad 29 to select the desired value.

For manual setting by metering

1. Select the menu option White balance, and
2. in the sub-menu select the Gray card option.
   - A message appears in the monitor: Please take a picture for setting the white balance
3. Take the picture, making sure that the image field contains a white or neutral gray (reference) surface.
   - The monitor shows
     - the image based on the automatic white balance
     - cross hairs in the middle of the image
     - top right Preview ◉ as referece to further operation
4. Press the relevant side of the direction pad to move the cross hairs to the subject detail you want to use as the basis for the new white balance setting (e.g. the reference surface mentioned above).
5. Press the Center button 30
   - The reproduction of color in the image is adjusted accordingly. In the top right, Save ◉ appears as reference to further operation
6. Either apply this new white balance setting
   - – by pressing the Center button again,
     - A message appears in the monitor: White balance is used
   - or press the MENU button 22 again to repeat the entire process (steps 2-6).

A value set in this way remains saved for and will be used for all pictures until it is superseded by a new metered value or you use one of the other white balance settings.

ISO SENSITIVITY

The ISO setting covers a range of ISO 100 - 50000, and thus enables you to adapt to the relevant situation as required.
As well as the fixed settings, the camera also features the **A**[1] function, in which the camera automatically adjusts the sensitivity to the ambient brightness and the shutter speed/aperture settings. In conjunction with aperture priority mode (see p. 169) this extends the range for automatic exposure control.
A manual setting provides more flexibility for using the desired shutter speed/aperture combination.
Within the automatic setting, it is possible to specify priorities, e.g. for compositional reasons.

Note:
Particularly at high ISO values and when editing pictures, noise as well as vertical and horizontal stripes may become visible, especially in large, uniformly bright areas of the subject.

Setting the function

Using the setting dial 10
The values engraved on the wheel are available, as well as the positions **A** for automatic setting and **M** for intermediate values, e.g. **250**, and for values higher than **6400**.
In its idling position – bottom – the wheel is locked.

1. Pull the setting wheel up, and
2. turn it so that the desired value or setting is opposite the index **11**
   - The set value is displayed:
     - in the viewfinder (for approx. 2s instead of the shutter speed)
     - in the monitor (only if the displays have been called up previously)
3. Press the setting wheel down

Further settings are made in the menu.

If intermediate values or higher values are to be set – M-ISO

4. Select menu option ISO Setup,
5. select M-ISO in the sub-menu, and
6. select the desired value from the list in the relevant sub-menu

[1] The function is not available when using flash units.

To restrict the automatic setting range

4. Select menu option ISO Setup,
5. Select Maximume Auto ISO, or Maximum shutter speed in the sub-menu, and
6. In the relevant sub-menus specify the desired values in the Maximum Auto ISO sub-menu, with the selected highest sensitivity, specify the range within which automatic setting is to work. In the Maximum shutter speed sub-menu you can either leave it to the camera to ensure wobble-proof shutter speeds - with one of the three focal length-specific settings 1/f, 1/[2f], 1/[4f][2], or specify the longest shutter speed yourself – between 1/2s and 1/500s. In the focal length-specific settings, the camera only switches to a higher sensitivity if the shutter speed would fall below the threshold due to low brightness, e.g. with a 50mm lens at speeds slower than 1/60s at 1/f, or 1/125s at 1/[2f], or 1/250s at 1/[4f].

[2] This function requires the use of coded lenses or setting of the lens type used in the menu (see p. 150).

Note:

The following rule applies when using automatic bracketing (see p. 172): The sensitivity automatically determined by the camera for the uncorrected picture is also used for all other pictures in a series, i.e. this ISO value is not changed during a series. This may mean that the slowest shutter speed specified under Set maximum exposure time is exceeded.

BRIGHT-LINE VIEW AND RANGE FINDER

This camera's bright-line view and range finder is not only a very high-quality, large, brilliant and bright viewfinder, it is also a highly accurate range finder coupled to the lens. All Leica M lenses with focal lengths from 16 to 135mm connect automatically when fitted on the camera. The viewfinder has a magnification factor of 0.72x. When using lenses with focal lengths of 28 (Elmarit from serial number 2 411 001), 35, 50, 75, 90 and 135mm, the relevant bright-line frame is automatically illuminated in the combinations 28+90mm, 35+135mm, 50+75mm. As soon as the camera electronics are switched on, they appear - illuminated in white by LEDs - together with the LEDs of the exposure meter, or the LED flash symbol on the lower edge of the viewfinder image.
The bright-line frames are linked to the range setting to ensure that the parallax - the offset between the lens and the viewfinder axis - is automatically compensated. At a range of below 2m the sensor detects slightly less than shown by the inner edges of the bright-line frame, and slightly more at longer ranges (see adjacent diagram). These slight variations, which are hardly ever critical in practice, are due to the operating principle.
Bright-line frames on a viewfinder camera must be matched to the image angle of the relevant lens focal lengths. However, the nominal image angles change slightly when focusing due to the changing extension, i.e. the distance between the optical system and the sensor plane. If the set range is less than infinity (and the extension correspondingly greater), the actual image angle is smaller - the lens captures less of the subject. In addition, the differences in the image angle tend to be greater at longer focal lengths, as a result of the greater extension.
In the middle of the viewfinder image is the square range metering image, which is brighter than the surrounding image field. For more details about setting the range and exposure metering, as well as flash mode, refer to the relevant sections.

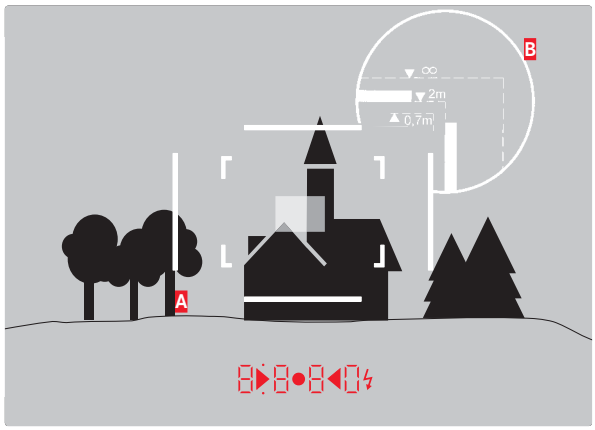

All pictures and bright-line frame positions relative to 50mm focal length

A	Bright-line frame
B	Actual image field
Set to 0.7m:	The sensor detects approx. one frame width less.
Set to 2m:	The sensor detects exactly the image field shown by the inner edges of the bright-line frame.
Set to infinity:	The sensor detects approx. 1 or 4 (vertical or horizontal) frame width(s) more.

IMAGE FIELD SELECTOR

The image field selector extends the possibilities of this built-in universal viewfinder: At any time, you can view frames that do not belong to the current lens. You can then see immediately if, for image composition reasons, it would be better to photograph the relevant subject using a different focal length.

35mm + 135mm

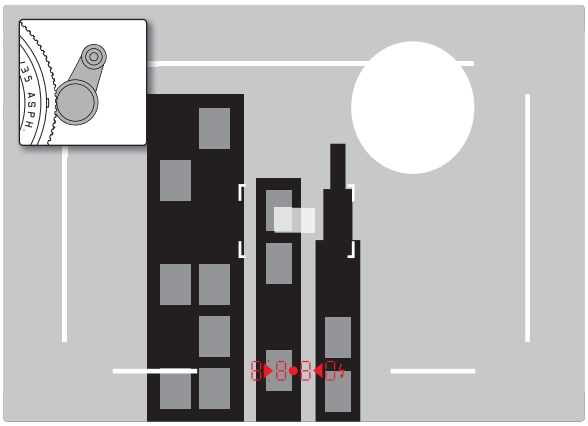

50mm + 75mm

28mm + 90mm

MONITOR

The camera has a large 3” liquid crystal color monitor, protected by a glass cover made of extremely hard, especially scratch-resistant Gorilla® glass 31. In picture mode with the live view function activated, it shows the image detected by the sensor through the attached lens. In review mode, it is used to view the pictures taken on the memory card. In both cases, it shows the entire image field, along with the selected data and information (see p. 212).
The brightness of the monitor image can be set using the menu. You can choose from automatic control, i.e. depending on the ambient brightness, and five manual levels, so that you can adapt it perfectly to the relevant situation

Setting the brightness

1. Select the menu option Monitor brightness, and
2. select the automatic setting or the desired level in the submenu.

Notes:
- You can (optionally) view all of the displays described in these instructions in an attached electronic viewfinder (such as the Leica Visoflex available as an accessory)
- The EVF brightness option can be used to set the brightness of this kind of viewfinder in exactly the same way as described above.

INFO screen

When using the exposure meter, you can use the monitor to display a number of settings by pressing the Center button.

LIVE VIEW MODE

Live view mode on this camera enables you to view the subject in the monitor when taking a picture, with a precise indication of how the attached lens will capture it. It is also a prerequisite for using particular focusing methods (see p. 165) and exposure metering methods.

Switching Live View function on/off

Press the LV button 24.

Notes:
- Live View mode is based on the image captured by the sensor. To do this, the camera must control the shutter. Of course, this is audible and results in a slight delay in the shutter release.
- The camera warms up, especially if Live View mode is being used for an extended period. Power consumption also increases at the same time.
- Alternating current causes fluctuations in the brightness of many light sources which are invisible to the eye. Owing to the sensitivity and scan rate of image sensors, this can result in flickering of the Live View monitor image. The photos are not affected by this. The effect can be eliminated from the shot by choosing a slower shutter speed.

Exposure simulation

In the factory setting, the subject in Live View mode is shown at the brightness corresponding to an optimum exposure setting[1]. This is the case irrespective of the exposure mode used (aperture priority/manual setting), and irrespective of the default shutter speed/aperture values.
Conversely, as soon as you press the shutter release to the first pressure point the brightness of the monitor image matches the exposure setting. This allows you to assess the effect the exposure setting will have on the image before shooting.

- This is displayed by.

A setting is available both for aperture priority and manual exposure setting where the actual image effect is displayed permanently.

Setting the function

1. Select menu item Photo assistant,
2. select exposure simulation in the sub-menu, and
3. there select Shutter release half pressed (factory setting) or Continuous (for manual exposure control).

[1] This applies as long as the subject brightness and the set exposure do not result in exceptionally low or high brightness values, and provided internal exposure setting is not longer than 1/60s.

Additional display options

Various pieces of information can be displayed in the Live View monitor image. Most appear in a header or footer (aslo see p. 212). In the standard setting, only the picture appears initially, i.e. without any button being pressed, as well as the footer, as long as the shutter release button is pressed down to the first pressure point. The header and footer can be permanently called up by pressing the Center button. In this case, holding the shutter release button at the first pressure point causes both to disappear.

In addition to the standard information in the header and footer, you can select a number of other displays to adapt the monitor image in picture and review mode to your needs. These include help functions for exposure setting and composition, as well as on focusing. The latter is dealt with in the Section ‘Range measurement’ on pages 164.

Histogram

The histogram depicts the brightness distribution in the picture. The horizontal axis shows the tone values from black (left) through gray to white (right). The vertical axis corresponds to the number of pixels at each brightness level.
This form of representation – in conjunction with the impression of the picture itself – provides an additional quick and easy assessment of the exposure setting.

Setting the function

1. Select menu item Photo assistant,
2. select Histogram in the sub-menu
3. select there On or Off.

Note:

If shutter release button half pressed (see previous page) is set, the histogram only appears when the button has been tapped.

Clipping

The Clipping displays show the light (red flashing) and dark (blue flashing) areas of a picture that are over or under exposed. To adjust these displays to specific conditions or your compositional ideas, you can specify limit values, i.e. the level of over or under exposure at which they appear.
The Clipping displays thus enable you to recognize affected pictures very easily and to adjust the exposure setting very easily.

Setting the function

1. Select menu option Photo assistant, and
2. select Clipping setting in the sub-menu.
   - A further sub-menu with the lines Clipping activated, Lower threshold value, Upper threshold value opens, and below this a scale, which reproduces both the threshold values set and the setting limits.
3. In the Clipping activated line, switch the function On or Off. If it is switched off, the two other lines are not available (= gray).
4. (Optional) In the Lower threshold value and Upper threshold value lines, set the desired lower and upper threshold values.

Notes:

- The histogram is always based on the brightness displayed, i.e. depending on the settings used it may not represent the final exposure.
- In picture mode, the histogram should be regarded as a "trend indicator" and not as a depiction of the exact numbers of pixels.
- For a picture with flash, the histogram cannot represent the final exposure as the flash is fired after it is displayed.
- When viewing a picture, the histogram may differ slightly from that shown when taking the picture.
- The histogram is not available for simultaneous review of several reduced pictures or for enlarged pictures.
- The clipping indicators always relate to the detail of the part of the picture currently being displayed.

Grid

Two grid line displays are available. They divide the image field into 3x3 or 6x4 fields. They facilitate things such as picture composition and exact camera orientation.

Setting the function

1. Select menu item Photo assistant,
2. select Grid lines in the sub-menu, and
3. select the desired arrangement in the relevant sub-menu, or switch the function Off.

RANGE MEASUREMENT

Various tools are available for setting the range, depending on whether you are using the camera's internal optical viewfinder 27 or live view mode (see p. 165).

With the optical range finder

Due to its large effective metering basis, the range finder on this camera is very precise. The benefits of this are particularly noticeable when using wide-angle lenses with their relatively high depth of field. The range finder metering field is visible as a bright, sharply defined rectangle in the center of the viewfinder. The focus can be set using either the superimposed image or split image method:

Superimposed image method (double image)

In a portrait, for example, aim the metering field at the eye and turn the distance setting ring on the lens until the contours in the metering field are brought into line. Then choose the subject detail.

out of focus

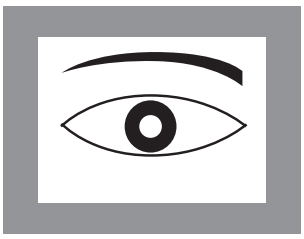
in focus

Split image method

When taking photographs of architecture, for example, aim the range finder metering field at the vertical edge or another clearly defined vertical line and turn the distance setting ring on the lens until the contours of the edge or line can be seen at the limits of the metering field with no misalignment. Then choose the subject detail.

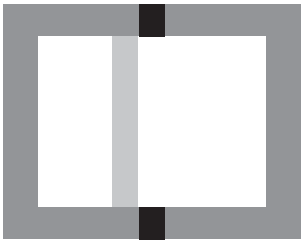
out of focus

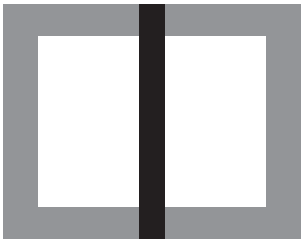
in focus

Note:
Please observe the third note on p. 136 with respect to setting accuracy.

With the monitor image in Live View mode

In Live View mode you can set the sharpness using the monitor image, as it displays the subject with exactly the same sharpness as is produced by the lens depending on the range and aperture setting.
This applies to all lenses used, i.e. also with Leica R lenses.

Note:
Due to the different sensitivities and function conditions, there may be differences between the optimum settings and those displayed.

Procedure
1. Switch on Live View mode by pressing the LV button 24.
2. Use the focusing ring on the lens to focus on the desired subject details.

Features for manual focusing in Live View mode

To make it easier to achieve precise settings or it increase the precision of a setting, two display variants are available.
- Enlarging an (initially) central detail of the monitor image.
- Identifying sharp subject parts in the monitor image.

Both variants can be used together.

Enlarging a detail

You can call up this function in three ways.

For occasional use:
With the Focus button:
1. Select menu item Photo assistant,
2. select Focusing aid MF in the sub-menu, and
3. select the function Manual there.
4. Press the focus button 3.

For continuous use
Use the focusing ring on the lens:
1. Select menu item Photo assistant,
2. select Focusing aid MF in the sub-menu, and
3. select the function Automatic there.
4. Turn the focusing ring on the lens 16.

Using the setting wheel of the camera:
1. Select menu option Individual settings,
2. select Configure thumbwheel in the sub-menu, and
3. in the sub-menu select LV Zoom.
4. Turn the setting wheel of the camera 21.

- As soon as the focus button is pressed or the ring or setting wheel turned, the monitor image shows:
  - the enlarged detail
  - bottom left with a rectangle within a frame, the approximate position of the detail

Further operation is identical in both cases:

5. (Optional)
   - Change the enlargement factor with the setting wheel 28 - in two stages.
   - Shift the position of the detail within the image field with the direction pad 29.
     - If the section has been shifted, a target cross in the image field indicates the center of the detail.
6. Use the focusing ring on the lens to focus on the desired subject details.

You can return to the normal – i.e. unzoomed – view at any time:
- By tapping the shutter release
- Using the setting dial

If you press the focus button again or turn the distance setting ring of the lens, the most recently used detail size appears.

Marking of clearly focused subjects

You can have the subject parts portrayed with optimum sharpness marked in the monitor image by 'coloring' the relevant contours, so that they can be easily recognized. The four available colors permit adaptation to any background.

Setting the function

1. Select menu item Photo assistant,
2. select Focus peaking in the sub-menu, and
3. select the desired color in the sub-menu or switch Off if you do not want to use the function.

Use

4. Determine the trimming.
5. Press the focus button 3, or turn the distance setting ring on the lens so that the desired subject parts are marked.
   - All subject details that are in focus at the set range are indicated by outlines in the selected color.

Important:
- This function is based on the subject contrast, i.e. light/dark differences. Therefore, subject details that are not completely in focus but have a high contrast may also be marked.
- In particular, when using wide-angle lenses with small apertures (= large depth of field), the accuracy of the display decreases.

EXPOSURE METERING AND CONTROL

Exposure metering displays

The displays in the viewfinder or monitor light up continuously to indicate that the exposure meter is ready:

- in aperture priority mode the display of the shutter speed,
- and in manual mode one of the two triangular LEDs in the viewfinder lights up, either individually or in conjunction with the center circular LED, while the light balance is displayed in the monitor.

If you let go of the shutter release button without activating the shutter, the relevant LED(s) remain(s) lit up until the camera switches itself off.

If the shutter speed setting dial 19 is set to B, the exposure meter is disabled.

Notes:

- In aperture priority mode, if correct exposure cannot be achieved using the available shutter speeds, the shutter speed display gives a warning by flashing (only in the viewfinder, for more details, refer to the "Aperture priority mode" section on p. 169).
- If the exposure meter reading is below the metering range in very low lighting conditions and in manual mode, the left hand triangular LED in the viewfinder flashes as a warning, or the left-hand bar of the light balance flashes in the monitor. In aperture priority mode, the shutter speed is still displayed. If the required shutter speed falls below the slowest possible setting, this display also flashes in the viewfinder.
- If the camera is out of use for an extended period or is stored in a case, always turn it off at the main switch. This also prevents pictures from being taken accidentally.

Exposure Metering Methods

Depending on whether the Live View mode is being used or not, various metering methods are available to you.

- If you are using the exposure meter:
  Strongly center-weighted metering. This method takes account of the entire image field, although the parts of the subject situated in the center have more influence on the exposure value calculation than the areas at the margins.
  The light reflected by a bright shutter diaphragm is captured by a photo diode and measured.
- In Live View mode:
  Either spot, center-weighted and multi-field metering. In these cases, metering is done by the picture sensor.

Selecting the Live View metering methods

Setting the function

1. Select menu option Exposure metering, and
2. select the desired metering method in the sub-menu:
   - Spot Only a small area, indicated by a circle in the middle of the monitor image, is captured and evaluated.
   - Center-weighted This method takes account of the entire image field, although the parts of the subject situated in the center have more influence on the exposure value calculation than the areas at the margins.
   - Multi-field This metering method is based on detection of multiple metered values. The values are used in an algorithm to calculate an exposure value appropriate to the situation, resulting in correct reproduction of the assumed main subject.

- In Live View mode, the metering method set is displayed in the header of the monitor image, if the viewfinder is being uses, in the INFO screen (see p. 212).

The appropriate shutter speed for correct exposure, or the variation from a correct exposure setting, are specified or determined using displays in the viewfinder or monitor (see following sections).

Exposure modes

The camera provides two exposure modes: Aperture priority mode and manual mode. Depending on the subject, situation and your individual preferences, you can thus choose between
- the familiar “semi automatic” operation, or
- setting a fixed shutter speed and aperture.

Aperture priority

If the shutter speed setting dial 19 is in the A position the electronics within the camera generates the exposure time automatically and continuously in the range 1/4000s to 125s, in accordance with the film speed setting, the metered brightness and the manually selected aperture. The calculated shutter speed is displayed in half steps to provide a better overview.
For shutter speeds slower than 2s the remaining exposure time is counted down and displayed in seconds after the shutter release. The actually generated and continuously controlled exposure time can however vary from the half step value displayed: For example, if the display shows 16 (the closest value) before releasing the shutter, but the calculated exposure time is longer, the countdown after releasing the shutter may actually start from 19.
Under extreme lighting conditions, based on all the parameters, the exposure meter may generate a shutter speed that is outside the working range, i.e. brightness values that would require shorter exposures than 1/4000s or longer than 125s. In such cases the specified minimum or maximum shutter speed is nevertheless used, and these values flash in the viewfinder as a warning.

Notes:
- As described in connection with the ISO setting, a certain amount of noise becomes apparent when using higher sensitivities, and particularly with uniform dark surfaces. To reduce this annoying phenomenon, after pictures with slow shutter speeds and high ISO values the camera automatically takes a second “black picture” (taken with the shutter closed). The noise present in this parallel picture is then digitally “subtracted” from the data for the real picture. As a result, the message Noise reduction appears for 12s[1] in the monitor. This doubling of the “exposure” time can be significant at longer exposure times, and must be allowed for. During this time the camera should not be turned off.
- If the B function is selected in conjunction with the auto shutter release (see p. 188), the shutter release button does not need to be kept pressed, the shutter will remain open until the shutter elease button is pressed a second time (this is then equivalent to a T function).

[1] Time data is an example

Exposure lock

For compositional reasons, the most important part of the subject is often not in the center of the picture, and as a result such important parts of the subject may be excessively light or dark. Center-weighted metering and spot metering record predominantly or exclusively an area in the center of the image are calibrated to an average gray scale value.
Subjects and situations of this type can be overcome very easily even in aperture priority mode, using exposure lock.

Notes:

- Exposure lock should not be used in conjunction with multi-field metering, as in such cases selective recording of a single subject detail is not possible.
- In conjunction with exposure lock, Live View also provides an exposure simulation feature (see p. 161).

Using the function

1. Aim at the important subject detail (with the metering field for spot metering) or alternatively at another detail with average brightness.
2. Pressing down shutter release button 18 to the 1st pressure point. Measurement and saving is carried out.
   - As long as the pressure point is held, a small red dot appears in the viewfinder at the top in the digits line for confirmation, and the exposure time no longer changes even if the lighting conditions are different.
3. Keeping the shutter release pressed, move the camera to capture the final trimming, and
4. release.

Changing the aperture setting after using exposure lock has no effect on the shutter speed, and will lead to an incorrect exposure. Exposure lock is canceled when you remove your finger from the shutter release pressure point.

Exposure compensation

Exposure meters are calibrated to an average gray scale value (18% reflection), which corresponds to the brightness of a normal, i.e. average photographic subject. If the actual subject detail does not match this assumption, an appropriate exposure compensation can be performed.
Particularly when taking several pictures in succession, for instance if for any reason a series of pictures is taken deliberately using slight under or overexposure, exposure compensation is a very useful function: In contrast to exposure lock, once set it remains effective until it is reset.
Exposure compensation can be set in the range ±3EV in 1⁄3 EV steps

Entering and canceling an exposure compensation
A. With focus button and setting wheel

1. Hold the focus button 3 pressed down, and
2. use the setting wheel 28 to select the desired value.

B. With setting wheel 'programmed' accordingly

1. Select menu option Individual settings,
2. select Configure thumbwheel in the sub-menu,
3. select Exposure compensation in the corresponding sub-menu, and
4. confirm the function by pressing the Center button 30.
5. Use the setting dial 28 to select the desired value.

C. Using the menu

1. Select menu optionExposure compensation.
   - The monitor shows a scale as a sub-menu:

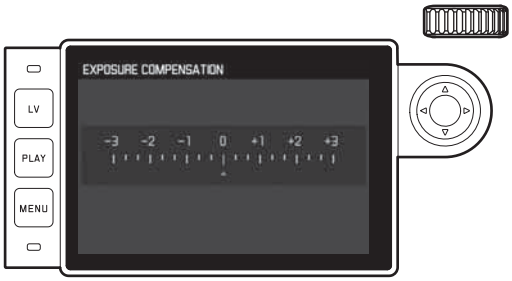

A Set compensation value (marks at 0 = switched off)

2. Set the desired value.

Displays

- In cases A and B, the compensation value is displayed in the viewfinder, for example 1.0- /0.3 (temporary display instead of the shutter speed). Then in the form of changed shutter speeds and a flashing dot at the bottom in the viewfinder, or for about 0.5s when the display is activated.
- Regardless of the setting method, the value is displayed in the monitor in Live View mode and in the INFO screen if the viewfinder is being used by means of a mark in the lower part of the light balance, and in the output menu list by means of EV+_X[1].

Important:

An exposure compensation set on the camera only influences metering of the available light, i.e. not flash light (for more information about flash photography, refer to the sections starting on p. 182).

Regardless of how the set compensation was originally entered:

- It remains effective until it is manually reset to 0, regardless of whether the camera has been turned off and back on in the meantime.
- It can be reset using either the menu or the setting wheel.

[1] Example, either plus or minus, "±X" stands for the respective value

Automatic bracketing

Many attractive subjects are very rich in contrast, i.e. they have both very light and very dark areas. The effect can be quite different, depending on which sections you base your exposure on. In such cases, the automatic bracketing function in aperture priority mode enables you to produce several alternatives with graduated exposure, i.e. using different shutter speeds. You can then select the most suitable picture for further use, or use appropriate software to create a picture with an exceptionally high contrast range (HDR).

The following are available:

- 5 graduations: 0.3EV, 0.7EV, 1EV, 2EV and 3EV
- 2 numbers of pictures: 3 or 5

Setting the function

1. Select menu option Picture sequence, and
2. select Exposure bracketing in the sub-menu.
   - The corresponding sub-menu appears in the monitor:

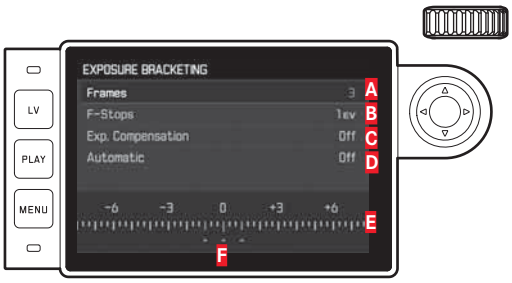

A Number of pictures
B Exposure difference between the pictures
C Exposure compensation setting
D Sequence for exposure bracketing
E Light value scale with red-highlighted exposure values of the
F pictures (if an exposure compensation has been set at the same time, the scale is shifted by the corresponding value).

3. In the Number of pictures line, select the desired value, in the Aperture stages line the desired exposure difference, and in the Exposure compensation line the exposure compensation value (optional).
   - The marked exposure values change positions according to the settings selected. In the case of exposure compensation, the scale also shifts.
4. In the Automatic line select whether the pictures should all be taken by pressing the shutter release button once - On, or all individually - Off.
5. Confirm the setting by pressing the Center button.
6. All pictures are produced by pressing the shutter release button once or several times.

Notes:

- The following rule applies when using automatic bracketing: with automatic control of the ISO sensitivity (see p. 156), the sensitivity automatically determined by the camera for the uncorrected pictures is also used for all other pictures in a series, i.e. this ISO value is not changed during a series. This may mean that the slowest shutter speed specified under Set maximum exposure time is exceeded.
- Depending on the initial shutter speed, the working range for automatic bracketing may be limited.
  Regardless of this, the specified numbers of pictures are always taken, which may mean that several pictures in a series have the same exposure.
- Automatic bracketing is also possible when using flash. It is implemented without regard to the state of charge of the flash unit, meaning the series may contain shots both with and without flash.
- The function remains active until another function is selected in the Picture sequence sub-menu, i.e. even after switching the camera off and on again. If no other function is selected, another series of pictures is taken each time the shutter release button is pressed.

Manual exposure setting

1. Press the shutter release button, and
2. use the time thumbwheel 19 and/or aperture setting ring 13 on the lens to set the desired exposure.
   In Live View mode this is done with the help of the mark on the light balance in the footer of the monitor image, if using the viewfinder with the help of a light balance made up of three LEDs.

As well as the direction of rotation of the shutter speed thumbwheel and aperture setting ring necessary for correct exposure, the three LEDs in the light balance also indicate underexposure, overexposure and correct exposure in the following way:

▶ Underxposure by at least one aperture stop; turning to the right is required

▶● Underexposure by 1/2 aperture stop; turning to the right is required

● Correct exposure

●◀ Overexposure by 1/2 aperture stop; turning to the left is required

◀ Overexposure by at least one aperture stop; turning to the left is required

Notes:

- The shutter speed dial must be clicked to one of the engraved exposure times or to one of the intermediate values.
- For shutter speeds slower than 2s the remaining exposure time is counted down and displayed in seconds after the shutter release.

The B setting/The T function

With the B setting, the shutter remains open for as long as the shutter release button is held down (up to a maximum of 125s; depending on the ISO setting).
The B function can also be used to permanently set shutter speeds that are slower than 8s.

1. Press focus button 3 for approx. 1s.
   - The shutter speed sub-menu appears in the monitor, or B. Available shutter speeds are indicated in white (different, depending on ISO sensitivity), those not available in gray.
2. Select the desired shutter speed
3. Leave the sub-menu by tapping the shutter release button 18, or pressing the MENU-22, or the Center button 30, and
4. Release.

In conjunction with the self-timer, a T function is also available: If both B is set and the self-timer is activated by pressing the shutter release button, the shutter opens autoamtically after the selected delay time. It then remains open until you press the shutter release button a second time – you do not need to hold the button down. This enables you to largely prevent any blurring, even with long exposures, by pressing the shutter release button.

In all cases, the exposure meter is disabled; after the shutter is released however the digital display in the viewfinder counts the elapsed exposure time in seconds, for guidance.

Notes:

- Long exposure times can be associated with very heavy picture noise.
- Following exposures with slower shutter speeds (below approx. 1/30s, differing depending on other menu settings) a data processing procedure takes place to reduce this annoying phenomonen that takes the same time as the exposure. This doubling of the "exposure" time can be significant at longer exposure times, and must be allowed for. During this time the camera should not be turned off.
  At shutter speeds of more than 2s, the message Noise reduction 12s[1] appears in the monitor.

[1] Time data is an example

Values above and below the metering range

If the exposure meter reading is below its working range in very low lighting conditions and in manual mode, the left hand triangular LED (▶) flashes as a warning in the viewfinder, while the right hand LED (◀) does the same if there is too much light. In aperture priority mode, the shutter speed is still displayed. If the required shutter speed is more than the slowest possible or less than the fastest possible, these displays also flash. As the exposure is metered with the working aperture, this situation can come about by stopping down the lens.

REVIEW MODE

To review pictures, you can select:
- PLAY Review for an unlimited time, or
- Auto Review Brief review immediately after taking the picture

Review for unlimited time

Press the PLAY button 23.

- The monitor shows the picture taken most recently and, if switched on during last use, the relevant displays.
  However, if the memory card inserted does not contain any image files, the following message appears when you switch to review mode: Attention: No image to display.
  Depending on the function previously set, pressing the PLAY button generates different responses:

Initial situation	After pressing the PLAY button
a. Full review display of a picture	Picture mode
b. Review of an enlarged section/ several reduced pictures	Full review display of the picture

Automatic review of last picture

In Auto Review mode, each picture is displayed immediately after it is taken. This allows you to quickly and easily check whether the picture was successful or needs to be taken again. This function enables you to select the time for which the picture will be displayed.

Setting the function

1. Select menu option Automatic review,
2. select the desired function or time in the sub-menu: (Off, 1s, 3s, 5s, Continuous).

From Automatic review mode, you can switch back at any time to normal, i.e. unlimited, PLAY review mode.

Note:

If you have been taking photographs with the picture series function (see p. 140), both review modes initially show the last picture in the series or the last picture in the series saved on the currently active card while saving is still ongoing. Details of how to select the other pictures in the series and further options in review mode are described in the sections below.

Display for Review

To allow uninterrupted viewing of the pictures, the pictures appear without the information in the headers and footers in review with factory settings.

Press the Center button 30 to call up the headers and footers at any time. If Histogram and Clipping are switched on (see p. 162), these displays also appear.

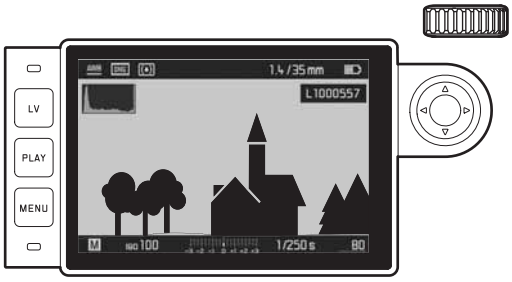

Notes:

- The histogram and the clipping indicators are available when viewing both the entire picture and a section of it, but not when simultaneously viewing 12 or 20 reduced pictures.
- The histogram and clipping indicators always relate to the detail of the part of the picture currently being displayed.

Viewing other pictures/Scrolling in the memory

You can open other saved pictures by pressing left and right on the direction pad 29. After the first and last picture, the series of pictures begins again in an endless loop, which means you can reach all pictures in either direction.

- The picture numbers shange accordingly.

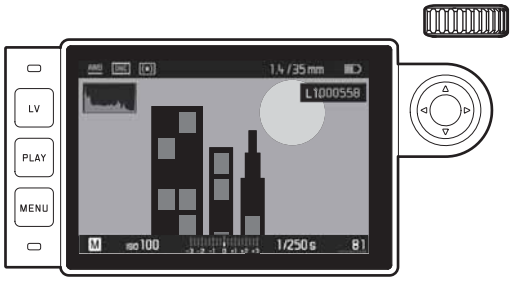

Enlarging/Selecting the trimming/Simultaneously viewing several reduced pictures

For closer study, you can open an enlarged section of a picture with a free choice of section. Conversely, you can also view up to 20 pictures simultaneously, e.g. to gain an overview or to find a specific picture more quickly.

Turn the setting wheel 28 to the right to enlarge a central section. Enlargement is possible up to 1:1, i.e. until 1 pixel of the monitor displays 1 pixel of the picture.
You can use the direction pad 29 to select any position of the section of an enlarged picture.

- In addition to the enlargement, the rectangle within the frame in the top left-hand corner symbolizes the position of the section displayed.

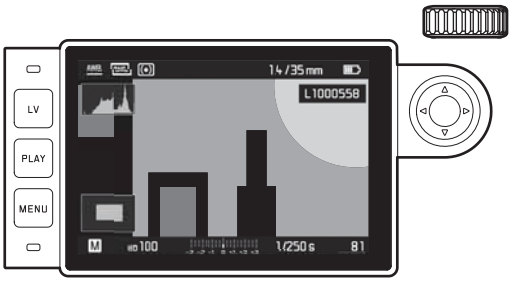

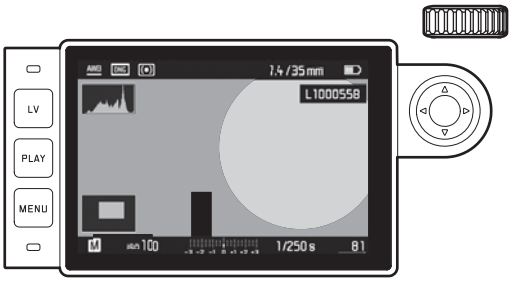

Note:
You can also switch from an enlarged picture
- directly to another picture, which will then be shown at the same enlargement. This is done by pressing left or right on the direction pad - but while holding down the PLAY button 23.
- mark the picture (see p. 180).

By turning the thumbwheel to the left (starting from normal size), you can simultaneously view 12 – or by turning the dial further 20 – pictures.

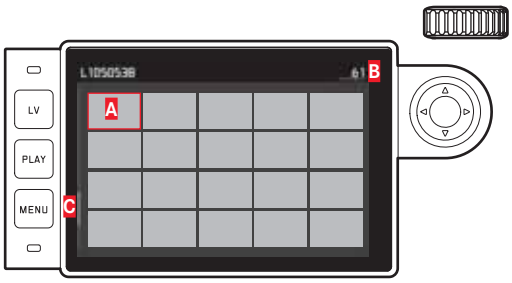

A Picture previously viewed in normal size
B Number of the picture with a red margin
C Scroll bar; schematically displays the position of the marked picture in the overall list.

With the direction pad you can freely navigate among the reduced pictures, the relevant picture is indicated by the red frame. You can return this picture to normal size by turning the setting wheel to the right or, in a single step, by pressing the PLAY button.

When 20 pictures are displayed, turning the setting wheel further to the left places the red frame around the entire group of pictures, which then allows you to scroll more quickly, a block at a time.

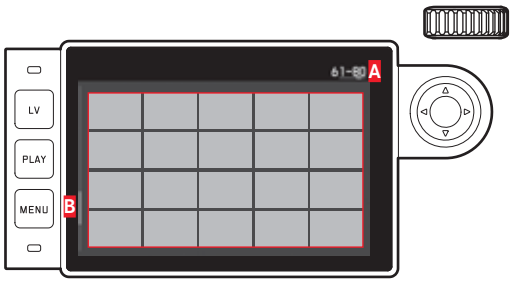

A Picture numbers of the group of 20 with a red frame
B Scroll bar; schematically displays the position of the marked picture in the marked group of 20.

Create recordings

You can mark every picture, e.g. to be able to find it more quickly again, or to make it easier to delete several pictures (see next section). Marking can be done directly, or with menu control.

Directly

Press the top side of the direction pad 29,

- The picture is marked by ★.

Do exactly the same to remove marking.

Menu control

1. Press the MENU/SET button 22
   - The relevant menu appears.

2. Select Compensation.
3. Press Center button 30.
   - The picture is marked by ★, in the menu Evaluate is replaced by Remove evaluation.

In principle, you can remove individual markings in the same way with Remove evaluation, several at the same time with Remove all evaluations. In this case, LED 21 flashes during the process.

Deleting Images

When a picture is displayed, you have an opportunity to delete it if you wish to do so. This can be useful, for example if the pictures have already been saved to other media, if you no longer require them or if you need to free up more space on the memory card. You can delete single pictures, only those that are not marked or all pictures at the same time, as required.

Procedure

1. Press the MENU/SET button 22
   - The delete menu appears.

The steps that follow vary depending on whether you want to delete only one or several pictures at the same time.

Deleting single pictures

2. Select Delete individually, and
3. to start the process, press Center button 30.
   - During deletion, LED 21 flashes.
     After deleting, the subsequent picture appears. If there are no more pictures saved on the card, the following message appears: Attention No image to display.

Deleting more than one picture/all pictures

2. Select Deleting multiple pictures,
3. Press Center button 30,
4. in the sub-menu, select the desired version, ALL, ALL unevaluated (see previous section), or, if you don't want to delete any pictures after all, Cancel, and
5. Press the Center button again.
   - During deletion, LED 21 flashes.
     Then the next marked picture appears.

In the case of ALL and ALL unevaluated, instead a query sub-menu appears for security against accidental deletion.

Only for ALL and ALL unevaluated

If all pictures really are to be deleted:

6. Select YES in the query menu.
   - During deletion, LED 21 flashes. Then the following message appears: Attention No image to display.

Notes:

- Marking and deletion is possible onlt from **PLAY** review. But regardless of whether a picture is being displayed at normal size or several reduced pictures are displayed (but not if the 20 picture review is activated with a red frame around the entire group).
- Even when the deletion and marking menu is called up, you can select other pictures at any time.
- You can switch off the deletion menu at any time with the **PLAY** button.
- When a picture is deleted, the subsequent pictures are re-numbered as follows: For example, if you delete picture no. 3, what was previously picture no. 4 then becomes no. 3, the previous no. 5 becomes no. 4 and so on. However, this does not apply to the picture numbering on the memory card.

ADDITIONAL FUNCTIONS

FLASH MODE

The camera determines the necessary flash power by firing one or more ranging flashes, fractions of a second before taking the actual picture. Immediately after this, at the start of exposure, the main flash is fired. All factors that influence the exposure (such as picture filter and changes to the aperture setting) are automatically taken into account.

Compatible flash units

The following flash units can be used with the camera. Depending on the configuration, they facilitate a varying number of the functions described in this manual.

- Leica system flash units, such as models SF40, SF64, SF26.
- Other Leica system flash units, except the Leica SF 20
- Other commercially available flash units with a standard flash foot and positive center contact [1] (fired by the center/X contact). We recommend the use of modern thyristor-controlled electronic flash units.
- Studio flash units (fired via synchronization cable)

[1] However, if flash units not specially designed for the camera are used and do not automatically adjust the white balance on the camere, the Flash setting ⚡WB should be used (see p. 154)

Attaching the flash unit

Before attaching a flash unit to the accessory shoe 20 on the camera,

- the cover that protects the accessory shoe when not in use, must be detached to the rear, and
- The camera and flash unit must be turned off.

When attaching a flash unit, you should ensure that the foot of the flash unit is fully inserted into the accessory shoe and the clamping nut is tightened to prevent it accidentally falling out. This is particularly important for flash units with additional control and signal contacts, because if the position in the accessory shoe changes the necessary contacts can be broken, leading to malfunctions.

Note:
Ensure that the accessory shoe cover is always fitted when no accessories are in use (such as a flash unit).

Flash exposure control

Fully automatic flash mode, i.e. controlled by the camera, is available on the camera with the system-compatible flash units listed in the previous section, and in aperture priority **A** and manual exposure modes.

In addition, automatic illumination control is operational in all three exposure modes. This means that in order to ensure a balanced relationship between flash and other lighting at all times, the flash power is reduced by up to 12/3EV as ambient brightness increases. However, if the ambient brightness plus even the shortest possible flash sync time of 1/180s would cause overexposure, a non-HSS compatible flash unit will not be fired in aperture priority mode. In such cases the shutter speed is governed by the ambient brightness and is shown in the viewfinder.

In aperture priority mode **A** and with manual setting, the camera also allows the use of creative flash techniques such as synchronization of flash firing with the 2nd shutter curtain rather than the 1st as is usual, and flash with slower shutter speeds than the sync speed of 1/180s. These functions are set on the camera using the menu (for more details, refer to the relevant sections below).

In addition, the camera transfers the set sensitivity to the flash unit. This allows the flash unit, provided it has received such information and the aperture manually set on the lens is also input to the flash unit, automatically to adjust its range values accordingly. With system compatible flash units, the sensitivity setting cannot be influenced from the flash unit as it is transferred from the camera.

Notes:

- Studio flash systems may have a very long burning time. Therefore, when using them it may be useful to select a slower shutter speed than 1/180s.
- The same applies to radio controlled flash triggers for "unchained flash", as the radio transmission can cause a delay.
- The following sections describe only those settings and functions that are available when using this camera with system-compatible flash units.
- An exposure compensation set on the camera (see p. 170) only influences the measurement of available light! If you want to simultaneously use compensation of the TTL flash exposure metering in flash mode – in parallel or in the opposite direction, you must make this additional setting (on the flash unit). (Exception: With the Leica SF26, correction must be set in the camera using menu control.)
- More details of flash use, in particular for other flash units not specially adapted to this camera and for different flash modes, can be found in the relevant manuals.

Settings for camera-controlled automatic TTL flash mode
On the flash unit:
1. Switch on the flash unit used, and
2. set to guide number control mode (e.g. TTL or GNC).

On the camera:
1. Switch the camera on, or tap the shutter release button if the camera has switched off automatically. If this is missed out by fully depressing the shutter release in one quick movement, the flash unit will not fire even if required.
2. Set the shutter speed dial to A, to the flash sync speed (1/180s), or to a slower shutter speed (including B).
   In the aperture priority mode, the camera automatically sets a shutter speed within the time range selected in the menu (see "Selecting the sync speed range"/"Selecting the firing moment", see p. 182). The shortest flash sync speed must be taken into account as this determines whether a "normal" flash is fired or an HSS flash.
3. Set the desired aperture, or the aperture required for the relevant distance to the subject.

Note:
If the automatically controlled or manually set shutter speed is faster than 1/180s, the flash is not fired unless the flash unit is HSS-compatible.

Flash exposure displays in the viewfinder with system-compatible flash units
A flash-shaped LED appears in the viewfinder as confirmation and to display the various operating conditions. This LED appears together with the displays for exposure metering for the ambient light level, described in the relevant sections.

In TTL flash mode
- ⚡ does not appear despite the flash unit being switched on and ready for use:
  A faster shutter speed than 1/180s is set manually on the camera and the connected flash unit is not HSS-compatible. In such cases the camera will not fire the flash unit even though it is switched on and ready for use.
- ⚡ flashes slowly (at 2Hz) before the picture is taken:
  The flash unit is not yet ready for use.
- ⚡ is lit up before the picture is taken:
  The flash unit is ready for use

- ⚡ remains continuously lit after taking the picture, and the other displays go out:
  The flash power was sufficient for standard exposure, the flash remains ready for use.
- ⚡ flashes quickly after release (at 4Hz), the remaining displays have gone out, however:
  The flash power was sufficient for standard exposure, the flash remains ready for use.
- ⚡ goes out after taking the picture, together with the other displays:
  the flash power was not sufficient for standard exposure, e.g. due to the choice of too small an aperture for the subject. If the flash unit is set to a partial discharge power, because of the lower power requirement it may be ready for use despite the flash LED not lighting up.

When the flash unit is set to camera control (A) or manual mode (M)

- ⚡ does not appear does not appear despite the flash unit being switched on and ready for use:
  On the camera, a shutter speed is set manually that is faster than 1/180s. In such cases the camera will not fire the flash unit even though it is switched on and ready for use.
- ⚡ flashes slowly (at 2Hz) before the picture is taken:
  The flash unit is not yet ready for use.
- ⚡ is lit up before the picture is taken:
  The flash unit is ready for use.

Flash mode with fast shutter speeds (High Speed Sync.)

Fully automatic, i.e. camera controlled, HSS flash operation is available with this camera when using correspondingly equipped Leica flash units, with all shutter speeds and in aperture priority and manual exposure modes. The camera activates it automatically if the selected or calculated shutter speed is faster than the sync speed of 1/180s. If the flash unit is set correctly, this change does not require the photographer to do anything else.

Important:

The range for HSS flash is significantly lower than for TTL flash.

Selecting the sync speed range

Reproduction of the available light is determined by the shutter speed and the aperture. A fixed setting to the fastest possible shutter speed for flash operation, the sync time, leads unnecessarily in many situations to a greater or lesser underexposure of all parts of the subject not directly lit by the flash.
This camera allows you to combine flash operation with the shutter speed generated in aperture priority mode to subtly change the lighting conditions for the relevant subject to suit your compositional ideas.

Setting the function

1. Select menu option Flash settings,
2. then Max. in the sub-menu Flash sync time, and
3. in the relevant list, select either one of the automatic, focal length-specific settings – 1/f, 1/(2f), 1/(4f), or the desired slowest shutter speed (in the range from 1/2s to 1/125s)[1].

[1] Only when using Leica M lenses with 6-bit coding, or with manual entry of the lens in the menu.

Notes:

- 1/f results in the slowest shutter speeds based on the rule of thumb for blur-free pictures taken from the hand, e.g. 1/60s with a 50mm lens. The corresponding shutter speeds with 1/(2f) and 1/(4f) in this example would be 1/125s and 1/250s.
  Important: The setting range is limited to 1/125s, even if the focal length used is longer.
- Manual exposure control also allows any shutter speed up to the sync speed of 1/180s to be set.

Selecting the firing moment

Flash photographs are illuminated by two light sources, the available light and the light from the flash. Parts of the subject that are exclusively or primarily illuminated by the flash are almost always reproduced sharply (with correct focusing) due to the extremely fast pulse of light. By contrast, all other parts of the subject – those that are sufficiently illuminated by the available light or illuminate themselves – are portrayed with different degrees of sharpness in the same picture. Whether these parts of the subject are reproduced sharply or “blurred”, and the degree of blurring, is determined by two independent factors:

1. the shutter speed, i.e. for how long these parts of the subject “act upon” the sensor, and
2. how quickly these parts of the subject – or the camera itself – are moving during exposure.

The longer the exposure time or the faster this movement, the greater the extent to which the two – superimposed – parts of the picture can differ.
With the conventional time for firing the flash, at the beginning of the exposure, i.e. immediately after the 1st shutter curtain has completely opened the image window. This can actually lead to visible contradictions, e.g. in the picture of the motorcycle, which is being overtaken by its own light trail. The camera allows you to choose between this conventional firing moment and synchronization with the end of the exposure, i.e. immediately before the 2nd shutter curtain starts to close the image window again. Shutter curtain starts to close the image window again. In this case, the sharp image reflects the end of the movement captured. In the photograph, this flash technique gives a natural impression of movement and dynamics.
The function is available
- for all camera and flash unit settings
- in aperture priority mode and with manual shutter speed selection
- in automatic and manual flash mode.

The displays are identical in both cases.

Setting the function
1. Select menu option Flash settings,
2. select Flash synchronization in the sub-menu, and
3. set the desired version.

Flash exposure compensation
This function can be used to selectively reduce or strengthen the flash exposure regardless of the exposure from available light, e.g. in a picture taken in the evening, to lighten the face of a person in the foreground while retaining the lighting atmosphere.

Setting the function
1. Select menu option Flash settings, and
2. select Flash exposure compensation in the sub-menu and
3. select the desired setting in the corresponding sub-menu.

Notes:
- Flash exposure compensation - when the flash unit is attached - is available only if compensation cannot be set on the flash unit used, e.g. with the Leica SF26.
- Brighter flash illumination selected using a positive compensation requires a higher flash power, and vice versa. Therefore, flash exposure compensation has a more or less significant impact on the flash range: A positive compensation reduces the range, while a negative compensation increases it.
- A flash exposure compensation setting remains active until it is reset to 0, i.e. after any number of pictures and even after turning off the camera.

TAKING PHOTOGRAPHS WITH THE SELF-TIMER

You can use the self-timer to take a picture with a delay of either 2 or 12s. This can be particularly useful, for example in the first case if you want to avoid the picture being out of focus due to camera shake when releasing the shutter or, in the second case, for group photographs where you want to appear in the picture yourself.

Setting and using the function

1. Select menu option Picture sequence, and
2. select the line with the desired delay time in the sub-menu.
3. Start delay time with the shutter release button 18.
   - The LED 7 on the front of the camera flashes - for the first 10s of a 12s delay time - to show the progress of the delay time. The countdown is shown in the monitor at the same time.

While the 12s self-timer delay time is running, it can be canceled at any time by pressing the MENU button 22 – the relevant setting is retained and the function can be restarted by pressing the shutter release button again.

Important:
In self-timer mode, the exposure is not set by pressing the shutter release button to the pressure point, it is set immediately before the picture is taken.

INTERVAL PICTURE SERIES

This camera makes it possible to automatically take pictures of motion sequences over a long period of time in the form of picture series. In order to do this, you must define the intervals between pictures and the number of pictures.

Setting and using the function

1. Select menu option Picture sequence,
2. select Interval in the sub-menu, and
3. in the relevant sub-menu, select Number of pictures.
4. In the associated button sub-menu, select the number of pictures that the intended interval series should comprise.

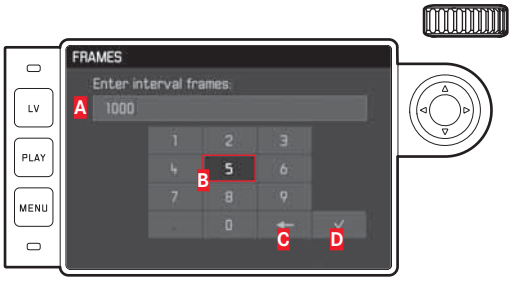

A Entry line
B Numeric pad
C "Delete" button (deletion of the respective last value)
D "Confirm" button (confirming individual values as well as completed settings; return to the previous menu level without confirming all settings by pressing the MENU button)

5. In the Interval sub-menu, select Time interval, and
6. select the desired time between the pictures in the relevant sub-menu.
   Changing the values: Press up/down on the direction pad.
   Change between hh (hour), mm (minute) and ss (second): Press left/right on the direction pad.
7. Start the series with the shutter release button 18.

A running series of pictures can only be aborted by switching off the camera. The relevant settings remain saved, so that a new series is started when the camera is switched on if you tap the shutter release button again.

Notes:

- With Interval shooting, Live View mode is possible only for a short time: It is switched off again after just one picture.
- Regardless of how many pictures have been taken in a series, both review modes initially show the last picture in the series or the last picture in the series saved n the currently active card while saving is still ongoing.

MARKING THE PICTURE FILES FOR COPYRIGHT PROTECTION

This camera enables you to mark your picture files by entering text or other characters. You can enter up to 20 characters of information under 2 headings for each picture.

Setting and using the function

1. Select menu item Camera information, and
2. select Copyright information in the sub-menu.
   - The relevant sub-menu contains the three items Copyright, Information and Artist. Only the Copyright line is initially activated.
3. Switch Copyright function On.
   - The Information and Artist lines are activated.
4. Call up Information/Artist sub-menu. (The further operation is identical in both cases.)
   - The keyboard sub-menu appears.

A Entry line
B Button
C "Delete" button (deletion of the respective last value)
D "Confirm" button (confirming individual values as well as completed settings; return to the previous menu level without confirming all settings by pressing the MENU button)
E Change case
F Change letters/numbers and symbols

- The first position of the entry line is marked as ready for editing. (In the factory setting, Information, and/or Artist are already there as examples). The available characters include upper and lower case letters and a space _, as well as, after shifting, the numbers from 0 to 9 and various punctuation marks. Both groups of characters are arranged in an infinte loop.

5. In this keyboard sub-menu, use the setting wheel 28 or the direction pad 29 to mark the desired character,
6. enter each one with the Center button 30, and
7. finally confirm your entries with the ✓ button.

RECORDING THE LOCATION WITH GPS

Note:
This option is only availalbe if the Leica Visoflex viewfinder is attached (available as an accessory).

The **G**lobal **P**ositioning **S**ystem enables the current position of a receiver to be determined worldwide. The Leica Visoflex viewfinder is fitted with an appropriate receiver. If it is attached to the camera, when the function is activated the camera continuously receives the corresponding signals and updates the position data. It can write this information - latitude and longitude, height above sea level - to the "EXIF" data.

Setting the function

1. Select menu option GPS, and
2. select On or Off.
   - The "satellite" symbol ( ) in the monitor 31 indicates the status (only in the picture data display):
     - = Last position determined up to 1 minute ago
     - = Last position determined up to 24 hours ago
     - = Last position determined at least 24 hours ago, or no position data available

Notes on the function:

- The GPS aerial is located at the top of the viewfinder housing.
- GPS positioning requires as clear a path as possible between this aerial and the sky. We therefore recommend holding the camera with the viewfinder pointing vertically upwards.
- It may take a few minutes to locate the position. This can occur especially when so much time has elapsed between turning the camera off and back on that the satellites have moved significantly and have to be re-located.
- Make sure that the GPS aerial is not covered with your hand or any other item, particularly metal objects.
- It may not be possible to receive good signals from GPS satellites at the following locations or in the following situations. In such cases, positioning may not be possible at all, or may be incorrect:
  - in closed rooms
  - underground
  - under trees
  - in a moving vehicle
  - close to high buildings or in steep valleys
  - close to high voltage cables
  - in tunnels
  - close to 1.5 GHz mobile telephones

Information for safe use

The electromagnetic field generated by the GPS system can influence instruments and measuring equipment. Therefore, make sure the GPS function is deactivated on board an aircraft before takeoff or landing, in hospitals or in other locations where there are restrictions on wireless transmissions.

Important (legal restrictions on use):

- In certain countries or regions, the use of GPS and associated technologies may be restricted. Therefore, before traveling in other countries you should consult the relevant country's embassy or your travel agent.
- The use of GPS inside the People's Republic of China and Cuba and close to their borders (exceptions: Hong Kong and Macao) is prohibited by national laws.
  Violations will be prosecuted by the authorities. The GPS function is therefore deactivated automatically in these areas.

USER/APPLICATION-SPECIFIC PROFILES

On this camera, any combination of menu settings can be permanently stored, e.g. so that they can be retrieved quickly and easily at any time for recurring situations/subjects. A total of four memory slots are available for these combinations, as well as a factory default setting that can be retrieved at any time and cannot be changed. You can change the names of the saved profiles.
Profiles set on the camera can be transferred onto a memory card, for example for use in other camera units, while profiles stored on a card can be transferred onto the camera.

Saving settings / Creating a profile
1. Set the desired functions in the menu.
2. Select User profiles in the menu,
3. select Save as user profile in the sub-menu, and
4. select a memory slot in the sub-menu.

Selecting a profile
1. Select menu option User profiles.
   - If user profiles are stored, the profile name appears in white, they are also marked as active. Free memory slots appear in gray.
2. Select the desired profile from the sub-menu list, either one of the saved profiles, or Standard user profile (corresponds to the camera factory setting).
   - The selected memory slot is indicated by User 1, for example, in the output menu list, in the information screen (see p. 214) by the relevant symbol, in this case .

Note:
If you change one of the settings for the profile currently in use, appears instead of the name of the prodile you were previously using in the initial menu list.

Renaming profiles
1. Select User profiles in the menu,
2. Rename user profiles in the sub-menu, and
3. select the required profile number in the sub-menu.
   - The keyboard sub-menu appears. It is the same as the one for the Copyright function (see p. 189).
4. Further operation is exactly as described for steps 5-7 of the Copyright function.

Saving profiles to a card/transferring profiles from a card
1. Select menu option User profiles.
2. in the sub-menu, select Export to card or Import from card,
3. confirm or reject the process in the relevant query sub-menu, and
4. Press Center button 30.

Note:
When exporting and importing, all 4 profile slots are transferred to the card, i.e. including any empty slots. As a result, when importing profiles any existing profiles in the camera will be overwritten, i.e. deleted.

RESETTING ALL CUSTOM SETTINGS

This function allows you to delete previous custom settings in the main and picture parameters menus at once, and reset them to the factory default settings.

Setting the function

1. Select menu optin Reset camera,
2. confirm or reject the process in the query sub-menu, and
3. Press Center button 30.

Notes:

- This reset also affects any individual profiles set and saved with the User profiles function.
- If the camera is not switched off, however, this does not apply to settings under Date & time. After the camera is switched on and off, however, there is a new start, i.e. these settings must then be made again.

FORMATTING THE MEMORY CARD

It is not normally necessary to format memory cards that have already been used. However, if a card that has yet to be formatted is inserted for the first time, it must be formatted.

Note:

You should get into the habit of copying all your pictures onto a secure bulk storage medium, e.g. the hard drive on your computer, as soon as possible. This is particularly important if the camera is being sent for servicing along with the memory card.

Procedure

1. Select menu option Format SD card,
2. confirm or reject the process in the query sub-menu, and
3. Press Center button 30.

Notes:

- Do not turn the camera off while a memory card is being formatted.
- If the memory card has been formatted in another device, such as a computer, you should reformat it in the camera.
- If the memory card cannot be formatted/overwritten, you should ask your dealer or the Leica Information Servive (for address, see p. 224) for advice.

FOLDER MANAGEMENT

The picture data on the memory card is stored in folders, which are created automatically. The folder names always consist of eight characters - three figures and five letters. In the factory default setting, the first folder is named "100LEICA", the second "101LEICA", etc. The next available number is always used as the folder number, and a maximum of 999 folders are possible. If the number capacity is exhausted, a corresponding warning message appears in the monitor. Within the folder, the individual pictures are given continuous numbers up to 9999 unless a the memory card in use already contains a picture with a higher number than the last number assigned by the camera. In such cases, the numbering used on the card is continued. If the current folder contains picture number 9999, a new folder is created automatically and the numbering begins again at 0001. If folder number 999 and picture number 9999 are reached, a corresponding warning message appears in the monitor and the numbering must be reset (see below). This can be caused by formatting the memory card, or by using a different memory card. On this camera you can also create new folders at any time, give them names of your choice and change the file names.

Changing folder name

1. Select menu option Image numbering, and
2. select New folder in the relevant sub-menu.
   - The keyboard sub-menu appears. It is the same as the one for the Copyright function (see p. 189).
3. Further operation is exactly as described for steps 5-7 of the Copyright function.
   - In the entry line, XXX LEICA always appears initially. Positions 4-8 can be changed.
     After the last entry, a query sub-menu appears.
4. Confirm or reject the new folder name.

Note:
If you are using a memory card that was not formatted with this camera (see p. 193), the camera automatically creates a new folder.

Changing picture file names

1. Select menu option Image numbering, and
2. select Change file name in the sub-menu.
   - The keyboard sub-menu appears. It is the same as the one for the Copyright function (see p. 189).
3. Further operation is exactly as described for steps 5-7 of the Copyright function.
   - In the entry line, L100-0001.DNG[1] always appears intially!. The first 4 characters can be changed.
     After the last entry, the Image numbering sub-menu appears again.

Reseting Image numbering

1. Select menu option Image numbering, and
2. select Reset in the sub-menu.
   - A query sub-menu appears.
3. Confirm or reject the process.

[1] Example, all characters are placeholders.

WIRELESS DATA TRANSMISSION AND REMOTE CONTROL OF THE CAMERA

You can control the camera remotely using an iPhone/iPad or use such devices as an external storage medium. For this, the app must be installed on your iPhone/iPad first of all. This app is available in the Apple App Store™ for iOS™ devices.

Activating Wifi and choosing the connection method

There are two ways to establish a connection between your camera and your iPhone/iPad. If you have access to Wifi, the Connect to Wifi method is recommended. When using this method, both the camera and iPhone/iPad are in the same Wifi network. If no Wifi is available, establishing a direct connection (Provide Wifi) may be most practical. When using this method, the camera generates an access point where your iPhone/iPad can register.

Setting the function

1. Select the menu option Wifi,
2. switch on Function in the sub-menu, and
3. in the same sub-menu select Connect to Wifi or Provide Wifi.

Connect to an available network (Connect to Wifi)

Access to the available Wifi networks is possible with this function.

Setting the function

4. In the Wifi sub-menu, select Setup
   - The camera automatically lists the available networks.
5. Select the desired Wifi from the network list or enter a hidden network with Add network.
6. Use the Center button to confirm the selected network.
   - The keyboard sub-menu appears.

Directe connection (Provide Wifi)

Access to the camera is possible without an available Wifi network with this function.

Setting the function

4. In the Wifi sub-menu, select Setup
5. Enter the camera name in SSID/network name (if desired). This is done in a keyboard sub-menu, exactly as described for Password.
6. Enter a network password at Key word (if desired). This is also done in a keyboard sub-menu, as described.

A Entry line
B Button
C "Delete" button (deletion of the respective last value)
D "Confirm" button (confirming individual values as well as completed settings; return to the previous menu level without confirming all settings by pressing the MENU button)
E Change case
F Change letters/numbers and symbols
- The first position of the entry line is marked as ready for editing. The available characters include upper and lower case letters and a space _, as well as, after shifting, the numbers from 0 to 9 and various punctuation marks. Both groups of characters are arranged in an infinte loop.

7. Enter the password (if necessary).

Notes:
- When using devices or computing systems that require more reliable security than Wifi devices, appropriate measures must be taken to ensure security and protect against disruptions to the systems used.
- Leica Camera AG does not accept any liability for damages arising from the use of the camera for purposes other than as a Wifi device.
- It is assumed that the Wifi function will be used in the countries where this camera is sold. If used in other countries than the one where the camera is sold, there is the risk that communications transmission conditions may be violated. Leica Camera AG does not assume any responsibility for violations of this kind.
- Please also notice that data transmitted and received wirelessly may be intercepted by third parties. We highly recommend that you activate encryption in the wireless access point settings in order to ensure that the information is secure.
- Don't use the camera in places where there are magnetic fields, static electricity, or disturbances, such as near microwaves. Otherwise the wireless transmissions may not reach the camera.
- Using the camera near devices such as microwaves or cordless telephones that use the 2.4 GHz radio frequency wavelength may negatively affect the performance of both devices.
- Do not connect to wireless networks you are not authorized to use.
- When the Wifi function is activated, the device will automatically search for wireless networks. When this happens, networks that you are not authorized to use (SSID: indicates the name used to identify a network over a Wifi connection) may be displayed. Do not attempt to connect to such a network, since this would be seen as unauthorized access.
- We recommend that you switch off the Wifi function on board planes

TRANSFERRING DATA TO A COMPUTER

The picture data on a memory card can be transferred to a computer with a card reader for SD/SDHC/SDXC cards.

Data structure on the memory card

When the data stored on a card is transferred to a computer, it is stored in folders with the names 100LEICA, 101LEICA, etc.
These folders can each hold up to 9999 pictures.

WORKING WITH DNG RAW DATA

If you wish to use the standardized and future-proof DNG (Digital Negative) format, you will need specialized software to convert the saved raw data into optimum quality, for example a professional raw data converter Adobe® Photoshop® Lightroom®. Such picture editing software provides quality-optimized algorithms for digital color processing, delivering exceptionally low-noise photographs with incredible resolution.
During editing, you have the option of adjusting parameters such as noise reduction, gradation, sharpness etc. to achieve an optimum image quality.

INSTALLING FIRMWARE UPDATES

Leica is constantly working on developing and optimizing its products. As many functions of the camera are entirely controlled by software, some of these improvements and extended functions can be installed at a later date. To do this, Leica releases what are known as firmware updates at irregular intervals, and these can be downloaded from our homepage.
Once you have registered your camera on the Leica Camera website, you wil be informed in newsletters when a firmware update is available. Leica Camera AG will notify you of all new updates.

To identify which firmware version is installed:

Select Camera Information in the menu.
- The version number is stated in the Camera Firmware line, on the right-hand side.

Further information on registration and on firmware updates for your camera and on any changes or additions to the details in this manual can be found on our website under "Customer Service" at:
https://owners.leica-camera.com

Notes:
- If the battery does not have sufficient charge, the warning message Battery low appears. In this case, first charge the battery and then repeat the process described above.
- Observe all the instructions concerning putting the camera into operation again.

PRECAUTIONS AND CARE INSTRUCTIONS

GENERAL PRECAUTIONS

- Do not use your camera in the immediate vicinity of devices with powerful magnetic, electrostatic or electromagnetic fields (e.g. induction ovens, microwave ovens, television sets or computer monitors, video game consoles, cell phones, radio equipment).
- If you place the camera on or very close to a television set, its magnetic field could interfere with picture recordings.
- The same applies for use in the vicinity of cell phones.
- Strong magnetic fields, e.g. from speakers or large electric motors, can damage the stored data or lead to damage of the pictures.
- Do not use the camera in the immediate vicinity of radio transmitters or high-voltage power lines. Their magnetic fields can also interfere with picture recordings.
- If the camera malfunctions due to the effects of electromagnetic fields, remove the battery, replace it and turn the camera on again.
- Protect the camera from contact with insect sprays and other aggressive chemicals. Petroleum spirit, thinner and alcohol may not be used for cleaning.
- Certain chemicals and liquids can damage the camera's housing or the surface finish.
- As rubber and plastics sometimes emit aggressive chemicals, they should not remain in contact with the camera for a long time.
- Ensure that sand and dust cannot get into the camera, e.g. on the beach. Sand and dust can damage the camera and the memory card. Take particular care when changing lenses and when inserting and removing the card.
- Ensure that water cannot get into the camera, e.g. when it is snowing or raining and on the beach. Moisture can cause malfunctions and even permanent damage to the camera and the memory card.
- Make sure the flash shoe cover is always fitted when no accessories are in use (such as a flash unit or an external viewfinder). It will protect the socket 28 for a time against water incursion.
- If salt water spray gets onto the camera, wet a soft cloth with tap water, wring it out thoroughly and wipe the camera with it. Then wipe down thoroughly with a dry cloth.

MONITOR

The monitor is manufactured using a high-precision process. This ensures that of the total of more than 1,036,800 pixels only a very small number will not work correctly, i.e. remain dark or always be lit. However, this is not a malfunction and it does not impair the reproduction of the picture.

- If the camera is exposed to significant temperature fluctuations, condensation can form on the monitor. Wipe it carefully with a soft dry cloth. If the camera is very cold when it is turned on, the displays may at first appear darker than usual. As soon as it warms up, it will reach its normal level of brightness.

SENSOR

- Cosmic radiation (e.g. during flights) can cause pixel defects.

CONDENSATION

- If condensation has formed on or in the camera, you should turn it off and leave it to stand
  at room temperature for around an hour. Once the camera temperature has adjusted to room temperature, the condensation will disappear by itself.

CARE INSTRUCTIONS

As any soiling also represents a growth medium for microorganisms, you should take care to keep the equipment clean.

FOR THE CAMERA

- Only clean the camera with a soft, dry cloth. Stubborn dirt should first of all be covered with a well-thinned cleaning agent and then wiped off with a dry cloth.
- To remove stains and fingerprints, the camera and lenses should be wiped with a clean lint-free cloth. Tougher dirt in hard to reach corners of the camera body can be removed with a small brush. The shutter blades may not be touched when doing this.
- All mechanically operated bearings and sliding surfaces on your camera are lubricated. Please remember this if you will not be using the camera for a long period of time. To prevent the lubrication points becoming gummed up, the camera shutter should be released a number of times every three months. It is also recommended that you repeatedly move and use all other controls. The range and aperture adjustment rings on the lens should also be moved periodically.
- Take care that the sensor for the 6-bit coding in the bayonet fastening does not become soiled or scratched. Take care also that no grains of sand or similar particles enter the fastening, where they could scratch the bayonet. Only clean this component when dry and do not exert any pressure on the glass cover.

FOR LENSES

- Normally, a soft hair brush is sufficient to remove dust from the outer lens elements. However, in case of more stubborn dirt, they can be carefully cleaned with a very clean, soft cloth that is completely free of foreign matter, using circular motions from the inside to the outside. We recommend micro-fiber cloths (available from photographic and optical specialists) that are stored in a protective container and can be washed at temperatures of up to 40°C (without fabric softener, never iron!). Cloths for cleaning glasses, which are impregnated with chemicals, should not be used as they can damage the lens glass.
- Take care not to scratch the 6-bit coding (sj) in the bayonet fastening, or to get it dirty. Take care also that no grains of sand or similar particles enter the fastening, where they could scratch the bayonet. Never wet this component when cleaning it!
- For optimum front lens protection in unfavorable photographic conditions (e.g. sand, salt water spray), use transparent UVa filters. However, you should bear in mind that, like all filters, they can cause unwanted reflections in certain backlight situations and with high contrasts. The generally recommended lens hood also protects the lens from unintentional fingerprints and the rain.

FOR THE BATTERY

Rechargeable lithium ion batteries generate power through internal chemical reactions. This reaction is influenced by ambient temperature and humidity. Very high or low temperatures reduce the life of the battery.

- Always remove the battery, if you will not be using the camera for a long period of time. Otherwise, after several weeks the battery could become totally discharged, i.e. the voltage is sharply reduced as the camera still consumes a small amount of current (for saving your settings) even when it is turned off.
- Lithium ion batteries should only be stored in a partially charged condition, i.e. not completely discharged or fully charged (in the corresponding display in the monitor). If the battery is stored for a long period of time, it should be charged around twice a year for approximately 15 minutes to avoid a full discharge.
- Always ensure that the battery contacts are clean and freely accessible. Whilst lithium ion batteries are proof against short circuits, they should still be protected against contact with metal objects such as paper clips or jewelry. A short-circuited battery can get very hot and cause severe burns.
- If a battery is dropped, check the casing and the contacts immediately for any damage. Using a damaged battery can damage the camera.
- In case of noise, discoloration, deformation, overheating or leaking fluid, the battery must be removed from the camera or charger immediately and replaced. Continued use of the battery results in a risk of overheating, which can cause fire and/or explosion.
- In case of leaking fluid or a smell of burning, keep the battery away from sources of heat. Leaked fluid can catch fire!
- A safety valve in the battery guarantees that any excess pressure caused by improper handling is discharged safely.
- Cold environments in particular can impair the performance of a battery.
- Batteries have only a limited service life. We recommend replacing them after around four years.
- The manufacturing date of a battery is on its housing: WWYY (WW = calender week/YY =year).
- Take damaged batteries to a collection point to ensure correct recycling.
- The batteries must not be exposed to heat or sunlight for prolonged periods, or to humidity or moisture. Likewise, the batteries may not be placed in a microwave oven or a high pressure container as this results in a risk of fire or explosion.

FOR THE CHARGER

- If the charger is used in the vicinity of radio receivers, it can interfere with the reception; make sure there is a distance of at least 1m between the devices.
- When the charger is in use, it can make a noise (buzzing) – this is quite normal and is not a malfunction.
- When it is not in use, disconnect the charger from the mains as otherwise it uses a certain (very small) amount of power even when no battery is inserted in it.
- Always keep the charger contacts clean, and never short circuit them.
- The car charging cable supplied
  - may only be operated with 12V electrical systems,
  - may never be connected while the charger is connected to the mains.

FOR MEMORY CARDS

- While a picture is being stored or the memory card is being read, it may not be removed, nor may the camera be turned off or exposed to vibrations.
- Make sure to store memory cards in their anti-static container when not in use.
- Do not store memory cards where they will be exposed to high temperatures, direct sunlight, magnetic fields or static discharge.
- Do not drop or bend a memory card as this can damage it and result in loss of the stored data.
- Always remove the memory card if you will not be using the camera for a long period of time,
- Do not touch the connections on the rear of the memory card and keep them free of dirt, dust and moisture.
- It is recommended that the memory card be reformatted from time to time, as fragmentation occurs when deleting, which can block some of the memory capacity.

Notes:

- Simple formatting does not cause the data on the card to be irretrievably lost. Only the directory is deleted, which means that the existing files are no longer directly accessible. The data can be accessed again using appropriate software. Only the data that is then overwritten by saving new data is actually permanently deleted. You should nevertheless get into the habit of transferring all your pictures onto a secure bulk storage medium, e.g. the hard drive on your computer, as soon as possible. This is particularly important if the camera is being sent for servicing along with the memory card.
- Depending on the memory card used, formatting can take up to 3 minutes.

CLEANING THE SENSOR/DUST DETECTION

If any dust or dirt particles should adhere to the sensor cover glass, depending on the size of the particles this can be identified by dark spots or marks on the pictures.
You can use the Dust detection function to check whether or how many particles are on the sensor. This is much more accurate than a visual inspection and is therefore a reliable method of assessing whether cleaning is required.
The camera an be returned to Leica Camera AG Customer Service (address: see p. 224) for chargeable cleaning of the sensor, this cleaning is not covered by the warranty.
You can also carry out cleaning yourself, using the Open shutter function in the menu. This allows access to the sensor by keeping the shutter open.

Dust detection

1. Select Sensor cleaning in the menu.
   - The relevant sub-menu appears.
2. Select Dust detection.
   - The following message appears: Attention Please close the aperture to the largest value (16 or 22), and take a picture of a homogeneous surface (defocused).
3. Press the shutter release button **17**.
   - After a short time, a "picture" appears in the monitor, in which black pixels represent grains of dust.

Note:
If dust detection is not possible, a corresponding message appears instead. After a few seconds, the display reverts to that described under 2. The picture can then be taken again.

Cleaning

1. Select Sensor cleaning in the menu.
   - The relevant sub-menu appears.
2. Select Open shutter.
   - A query sub-menu appears.
3. Confirm the process. If there is sufficient battery capacity, i.e. at least 60%, the shutter then opens.
   - The message Please switch off camera after cleaning appears.

Note:
If the battery capacity is lower, the warning message Attention Battery capacity too low for sensor cleaning appears instead to indicate that the function is not available, i.e. Yes cannot be selected

4. Clean. Make sure you follow the instructions below.
5. When cleaning is complete, turn off the camera. As a precaution, the shutter is only closed 10s later.
   - The message Attention Please stop sensor cleaning immediately appears.

Notes:

- As a rule: To protect the camera against ingress of dust etc. into the interior of the camera, it is important always to have a lens or a cover fitted to the camera body.
- For the same reason, when changing lenses work quickly and in an environment that is as dust-free as possible.
- As plastic parts can easily pick up a static charge and then attract more dust, the lens caps and covers should only be stored for short periods in pockets in clothing.
- As far as possible, both inspection and cleaning of the sensor should be performed in a dust-free environment to prevent further soiling.
- Lightly adhering dust can be blown off the sensor cover glass using clean and, if necessary ionized gases such as air or nitrogen. It makes sense to use a (rubber) bellows with no brush for this purpose. Special, low pressure cleaning sprays such as "Tetenal Antidust Professional" can also be used in line with their specified usage.
- If the particles cannot be removed from the sensor in this way, please refer the matter to your Leica Information Service.
- If the battery capacity falls to lower than 40% while the shutter is open, the warning message Attention Please stop sensor cleaning immediately appears in the monitor. Turning the camera off will cause the shutter to be closed again.
- Be absolutely sure in this case that the shutter window is clear, i.e. that no object can obstruct the closing movement of the shutter, otherwise damage may occur.

Important:

- Leica Camera AG accepts no liability for damage caused by the user when cleaning the sensor.
- Do not attempt to blow dust particles off the sensor cover glass using your mouth; even tiny droplets of saliva can cause marks that are difficult to remove.
- Compressed air cleaners with high gas pressure may not be used as they can also cause damage.
- Take care to avoid touching the sensor surface with any hard objects during inspection and cleaning.

STORAGE

- If you are not using the camera for a longer period of time, we recommend that you:
  a. remove the memory card (see p. 132), and
  b. remove the battery (see p. 132), (after 2 months at the latest the date and time that were entered will be lost).
- A lens works like a magnifying glass if bright sunlight shines on the front of the camera. The camera must always be protected from strong sunlight. Use the lens cover and keep the camera in the shade (or immediately put it away in the case) help to prevent damage to the interior of the camera.
- You should preferably store the camera in a closed and padded container so that nothing can damage it and it is protected from dust.
- Store the camera in a dry, adequately ventilated place, where neither high temperatures nor high humidity will occur. When used in humid conditions, the camera should be completely free of all moisture before being stored away.
- Photo cases that became wet during use should be emptied to prevent damage to your equipment caused by moisture and any leather-tanning residue released.
- To prevent fungal growth during use in hot, humid tropical climates, the camera equipment should be exposed to the sun and air as much as possible. Storage in airtight containers or cases is recommended only if a desiccant such as silica gel is placed in the container.
- To prevent the formation of fungus, do not store the camera in a leather case for extended periods of time.
- Note the serial numbers of your camera (engraved on the accessory shoe) and lenses, as these are extremely important in case of loss.

TROUBLESHOOTING

The camera does not respond when I turn it on.

- Has the battery been correctly inserted?
- Does the battery have sufficient charge?
  Use a charged battery.
- Has the bottom cover been correctly fitted?

The camera turns itself off again as soon as I turn it on.

- Does the battery have sufficient charge to operate the camera?
  Charge the battery or insert a charged battery.
- Is there any condensation?
  This occurs if the camera is moved from a cold place to a hot place. In this case, wait until the condensation has evaporated.

The camera shutter refuses to trip.

- Picture data is currently being transferred to the memory card and the back-up memory is full.
- The capacity of the memory card is exhausted and the back-up memory is full.
  Delete pictures you no longer require before taking new ones.
- No memory card has been inserted and the back-up memory is full.
- The memory card is write-protected or defective.
  Switch the camera's write protection off, or insert a different memory card.
- Image numbering has run out.
  Reset Image numbering.
- The sensor has overheated.
  Give the camera a chance to cool down.

I cannot save the picture.

- Is a memory card inserted?
- The capacity of the memory card is full.
  Delete pictures you no longer require before taking new ones.

The monitor is too dark or too bright.

- When viewing the monitor image from wide angles it is always more difficult to see.
  If it is too light or too dark although you are looking at the monitor full on: Set a different brightness or use the external electronic viewfinder available as an accessory.

The picture I have just taken is not shown in the monitor

- Is the Auto Review function turned on (when the camera is set to a picture mode)?

I cannot display the picture.

- Is a memory card inserted?
- The memory card does not contain any data.

The date and time displays show incorrect values or are blank.

- The camera has not been used for a long period, particularly if the battery has been removed.
  Insert a fully charged battery.
  Set the date and time.

APPENDIX

VIEWFINDER DISPLAYS

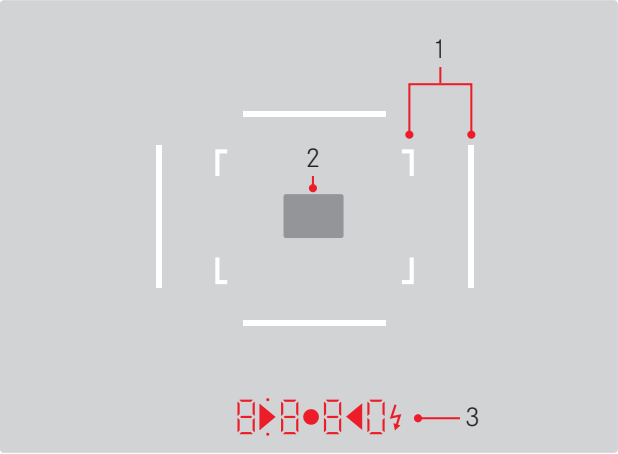

1. Bright line frame for 50mm and 75mm[1] (example)

2. Metering field for distance setting

3. LEDs[1] (Light Emitting Diodes) for:
   a. Four-digit digital display with dots above and below
      8 8 8 0 Digital display:
      - Display of the automatically determined shutter speed for aperture priority A, or for counting down shutter speeds slower than 1s
      - Warning that the metering or setting ranges are overshot or undershot using aperture priority A
      - Displays the exposure compensation value (briefly during adjustment, or for about 0.5s when exposure metering is activated by tapping the shutter release)
      - Indicates that the back-up memory is (temporarily) full
      - Indicates that no memory card is loaded (Sd)
      - Indicates that the memory card is full (Full)
   b. • Dot above:
      - Indicates (when lit) that saved metering values are being used
   c. • Dot below:
      - Indicates (flashing) that exposure compensation is being used
   d. ▶ • ◀ Two triangular and one circular LED:
      - For manual exposure setting: Together as a light balance for exposure compensation. The triangular LEDs give the direction of rotation of the aperture setting ring and shutter speed setting dial to adjust the exposure.
      - Warning of values below the metering range
   e. ⚡ Flash symbol:
      - Flash ready to use
      - Details of flash exposure before and after the picture

[1] With automatic brightness control adjusted to the ambient brightness. This automatic control is not available for Leica M lenses with viewfinder attachments, since they cover the brightness sensor 5 which supplies the information required for their operation. In such cases the frame and displays always maintain a constant brightness.

MONITOR DISPLAYS

WHEN TAKING A PICTURE

In Live View mode

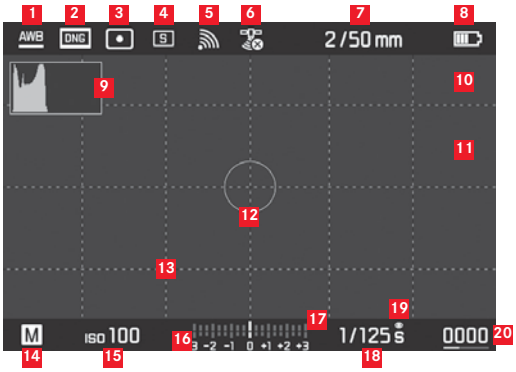

1 White balance mode
2 File format/compression/resolution
3 Exposure metering method
4 Shutter release button/Picture sequence mode
5 Wifi (only if switched on, different displays depending on reception situation)
6 GPS (only if switched on, different displays depending on reception situation)
7 Light intensity/focal length or lens type
8 Battery capacity
9 Picture histogram
10 Clipping identification of under (blue), or over exposed subject sections (red)
11 Identification of in focus edges in the subject (Focus Peaking)
12 Spot expsoure metering field (only if the metering method is switched on)
13 Grid form (2 versions can be selected)
14 Exposure mode
15 ISO sensitivity/setting
16 Light balance
17 Exposure compensation scale
18 Shutter speed
19 Exposure simulation
20 Remaining number of pictures, incl. trend detection by means of bar charts
21 ■ Display of trimming size and position (only when enlarging a section)

In viewfinder mode (by pressing the Center button)

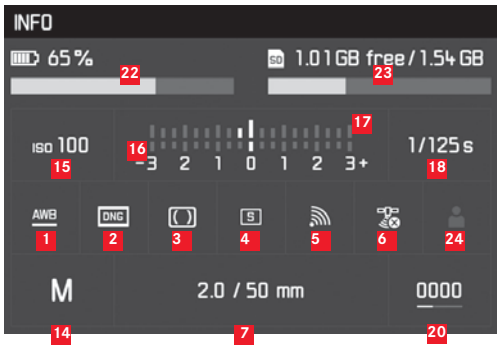

22 Battery capacity, in comparison to Live View mode with additional trend detection by means of bar chart
23 Memory card capacity, incl. trend detection by means of bar charts
24 Profile storage slot used (only if switched on)

IN PLAYBACK MODE

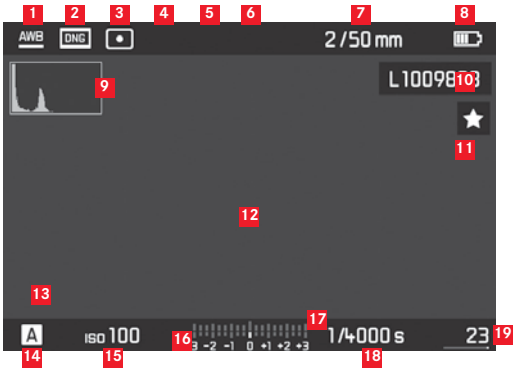

1 *White balance mode*
2 File format/compression/resolution
3 Exposure metering method
4 Shutter release button/Picture sequence mode
5 Wifi (only if switched on, different displays depending on reception situation)
6 GPS (only if switched on, different displays depending on reception situation)
7 Light intensity/focal length or lens type
8 Battery capacity
9 Review histogram
10 File number of the picture shown
11 Symbol for marked picture
12 Clipping identification of under (blue), or over exposed subject sections (red)
13 ■ Display of trimming size and position (trimming only)
14 Exposure mode
15 ISO Sensitivity
16 Light balance
17 Scale for exposure compensation
18 Shutter speed
19 Total number of pictures on the memory card, incl. bar chart for display of the relative position in relation to the total number of pictures
20 □ Selected picture/selected group of pictures (reduced viewing of 12/20 pictures only)

Deletion menu

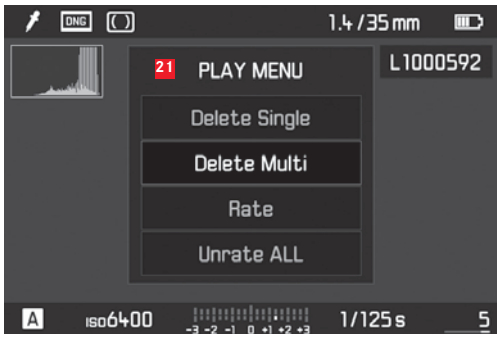

21 Deletion menu with menu options

FOR MENU CONTROL

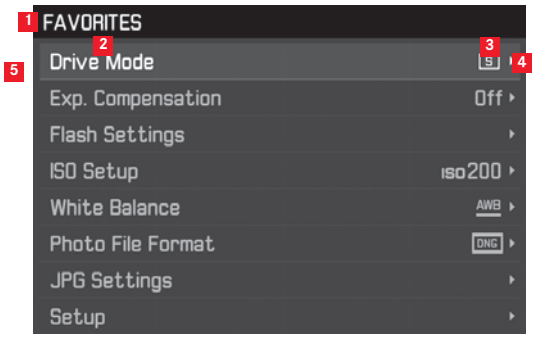

1 Indication of the FAVORITES menu area (only if at least one menu option is assigned to this menu)
2 Menu option
3 Menu option setting
4 Reference to sub-menu
5 Scroll bar with page indication (‘main’ menu only)

MENU OPTIONS

	Factory setting FAVORITES menu	Can be used for FAVORITES menu	Page
Lens type detection		✖	38
Picture sequence	✖	✖	28/60/76
Exposure metering		✖	56
Exposure compensation	✖	✖	59
Flash settings	✖	✖	74/75
ISO Setup	✖	✖	44
White balance	✖	✖	42
File format	✖	✖	40
JPG settings	✖	✖	40-41
		JPG Resolution (Subsection of JPG Settings JPG Settings)	
Automatic review		✖	64
Photo assistant		✖	49
EVF/Display control		✖	49-52/53-54
User profiles		✖	36
Individual settings		✖	80
Monitor brightness		✖	48
EVF brightness		✖	48

	Factory setting FAVORITES menu	Can be used for FAVORITES menu	Page
Auto power off		✖	36
Wifi		✖	84
GPS[1]		✖	78/35
Date & Time		✖	34-35
Language		✖	34
Reset camera		✖	81
Format SD card		✖	81
Image numbering			82-83
Sensor cleaning			94
Camera information			5/77/87

[1] This option is only availalbe if the Leica Visoflex viewfinder is attached (available as an accessory).

INDEX

Aperture priority 169
Aperture setting ring 124
Battery, inserting and removing 132
Bright-line view and range finder..... 158/210
Care instructions 202
Carrying strap 128
Cautions 200
Color saturation, see image properties
Contrast, see image properties
Copyright 189
Customer Service 224
Data structure on the memory card.....198
Data Transfer to a PC 198
Deleting pictures.....180
Depth of field scale 124
Designation of parts.....124
Detail, selection of the, see Review mode 178
Displays
  in the monitor.....211
  in the viewfinder 210
Distance setting.....164
  Focusing aids 165/166
  Metering field 158/210
  On the monitor 165
  Range finder.....162
  Setting dial 124
  Split image method.....164
  Superimposed image method 164
DNG 152/199
Enlarging pictures 165/178
Exposure/exposure control/exposure meter
  Aperture priority 169
  Automatic bracketing.....172
  Exposure compensation 170
  Manual setting.....174
  Metering field 175/220
  Metering memory lock.....170
  Metering methods 168
  Power Off 139
  Values above and below the metering range.....175
  Turning on 139
Firmware downloads 199
Flash mode 182
  Flash units.....182
  Synchronization.....186

Format frame 158/210
Formatting the memory card 193
GPS 190
Histogram 162/212
HSS flash 180
Image frequency 140
Image properties (contrast, sharpness, color saturation) 153
Info service, Leica Product Support 224
Interchangeable lenses 135
Interval pictures 188
ISO sensitivity 156
Lenses, Leica M 135
  Fitting and removing 137
  Design 124
  Use of older lenses 135-136
Live View 160/165
Main switch 138
Malfunctions and their resolution 208
Memory card, inserting and removing 134
Menu control 142
Menu language 146
Menu options 217
Monitor 160
Parts, designation of 124
Picture series 140
Power off, automatic 148
Range finder 159
Raw data 152/199
Repairs/Leica Customer Care 224
Resetting all custom menu settings 193
Resolution 152
Review mode 176
Scope of Delivery 116
Self-timer 188
Sensitivity 156
Sharpness, see image properties
Shutter release, see also shutter and technical data 139/222
Shutter, see shutter release and technical data
Spare parts 116
Storage 208
Time and date 146
Time setting dial 141
Time/aperture combination, see Exposure setting 174
Turning on/off 138
Viewfinder
  Bright-line frame 158/210
  Displays 210
  Technical data 220
Viewing pictures 176
  with the Auto Review function (Automatic review) 176
  with the PLAY function 176
Warning messages 122
White balance 154
Wifi 196

TECHNICAL DATA

Camera type
Leica M10, compact digital view and range finder system camera
Type number
3656
Lens attachment
Leica M bayonet with additional sensor for 6-bit coding
Lens system
Leica M lenses, Leica R lenses can be used with an adapter (available as an accessory, see p. 116)
Shot format/picture sensor
CMOS chip, active surface approx. 24 x 36mm
Resolution
DNG™: 5976 x 3992 pixels (24MP),
JPEG: 5952 x 3968 pixels (24MP), 4256 x 2832 pixels (12MP), 2976 x 1984 pixels (6MP)
Data formats
DNG™ (raw data, compressed loss-free), JPEG
File size
DNG™: 20-30 MB, JPEG: Depending on resolution and picture content
Buffer memory
2GB / 16 pictures in series
White balance
Automatic, manual, 8 presets, color temperature input
Storage medium
SD cards up to 2GB/SDHC cards up to 32GB/SDXC cards up to 2TB
Menu languages
German, English, French, Spanish, Italian, Portuguese, Japanese, Traditional Chinese, Simplified Chinese, Russian, Korean

Exposure metering
Exposure metering through the lens (TTL), with working aperture;
metering principle/method
For metering the light reflected by light blades of the 1st shutter curtain onto a measuring cell: Strong center-weighted; for metering on the sensor: Spot, center-weighted, multi-field metering
Metering range
At room temperature and normal humidity for ISO 100, at aperture 1.0 EV-1 to EV20 at aperture 32. Flashing of the left triangular LED in the viewfinder indicates values below the metering range
Sensitivity range
ISO 100 to ISO 50000, adjustable in 1/3 ISO increments from ISO 200, choice of automatic control or manual setting
Exposure modes
Choice of automatic shutter speed control with manual aperture preselection - aperture priority A, or manual shutter speed and aperture setting

Flash exposure control
Flash unit attachment
Via accessory shoe with central and control contacts
Synchronization
Optionally triggered at the 1st or 2nd Shutter curtain
Flash sync time
⚡ = $^{1}/_{180}$s; slower shutter speeds can be used, if working below sync speed: Automatic changeover to TTL linear flash mode with HSS-compatible Leica system flash units
Flash exposure metering
Using center-weighted TTL pre-flash metering with Leica flash units (SF40, SF64, SF26), or flash units compatible with the system with SCA3502 M5 adapter
Flash measurement cell
2 silicon photo diodes with collection lens on the camera base
Flash exposure compensation
±3EV in⅓EV increments
Displays in flash mode (in viewfinder only)
Using flash symbol LED

Viewfinder
Construction principle
Large, bright line frame viewfinder with automatic parallax compensation
Eyepiece
Calibrated to -0.5 dpt.; corrective lenses from -3 to +3 diopter available
Image field limiter
By activating two bright lines each: For 35 and 135mm, or for 28 and 90mm, or for 50 and 75mm; automatic switching when lens is attached.
Parallax compensation
The horizontal and vertical difference between the viewfinder and the lens is automatically compensated according to the relevant distance setting, i.e. the viewfinder bright-line automatically aligns with the subject detail recorded by the lens.

Matching viewfinder and actual image
At a range setting of 2m, the bright-line frame size corresponds exactly to the sensor size of approx. 23.9 x 35.8mm; at infinity setting, depending on the focal length, approx. 7.3% (28mm) to 18% (135mm) more is recorded by the sensor than indicated by the corresponding bright line frame and slightly less for shorter distance settings than 2m
Magnification (For all lenses)
0.73 x
Large-base range finder
Split or superimposed image range finder shown as a bright field in the center of the viewfinder image
Effective metering basis
50.6mm (mechanical measurement basis 69.31mm x viewfinder magnification 0.73x)

Displays
In the viewfinder
Four-digit digital display with dots above and below
On back
3” color -TFT LCD monitor with 16 million colors and 1,036,800 pixesn, approx. 100% image field, glass cover of extremely hard, scratch-resistant Gorilla® glass, color space: sRGB, for Live-View and review mode, displays

Shutter and shutter release
Shutter
Metal blade focal plane shutter with vertical movement
Shutter speeds
For aperture priority: (**A**) continuous from 125s to 1/4000s.,
for manual adjustment: 8s to 1/4000s in half steps, from 8s to 125s in whole steps, **B**: For long exposures up to maximum 125s (in conjunction with self-timer T function, i.e. 1st release = shutter opens, 2nd release = shutter closes),
(1/180s): Fastest shutter speed for flash synchronization, HSS linear flash mode possible with all shutter speeds faster than 1/180s (with HSS-compatible Leica system flash units)
Picture series
approx. 5 pictures/s, 30-40 pictures in series
Shutter release button
Two-stage, 1st step: Activation of the camera electronics including exposure metering and exposure lock (in aperture priority mode), 2nd step: Shutter release; standard thread for cable release integrated.
Self-Timer
Delay optionally 2s (aperture priority and manual exposure setting) or 12s, set in menu, indicated by flashing LED on front of camera and corresponding display in monitor.

Turning the camera on/off
Using main switch on top of camera; optional automatic shutdown of camera electronics after approx. 2/5/10 minutes; reactivated by tapping the shutter release

Power supply
1 lithium ion rechargeable battery, nominal voltage 7.4V, capacity 1300mAh.; maximum charging current/voltage: DC 1000mA, 7.4V; Model No.: BP-SCL5; Manufacturer: PT. VARTA Microbattery, Made in Indonesia, Operating conditions (in camera): 0°C - + 40°C

Charger
Inputs: 100-240V AC, 50/60Hz, 300mA, automatic switching, or 12V DC, 1.3A; Output: DC 7.4V, 1000mA/max. 8.25V, 1100mA; Model No.: BC-SCL5; Manufacturer: Guangdong PISEN Electronics Co., Ltd., Made in China, Operating conditions: 0°C - + 35°C

GPS (only with Leica Visoflex viewfinder attached, available as an accessory)
Optional (not available everywhere due to country-specific legislation, i.e. enforced automatic shutdown in those countries), data are written to EXIF header in picture files.

Wifi
Complies with IEEE 802.11b/g/n standard (standard Wifi protocol), channel 1-11, encryption method: Wifi-compatible WPA™/ WPA2™ encryption, access method: Infrastructure mode

Camera body

Material
All-metal die cast magnesium body, synthetic leather covering. Brass top panel and base, black or silver chrome plated finish

Image field selector
Allows the bright-line pairs to be manually activated at any time (e.g. to compare detail)

Tripod thread
A ¼ (¼“) DIN stainless steel in bottom

Operating conditions
0-40°C

Interfaces
ISO accessory shoe with additional contacts for Leica Visoflex viewfinder (available as an accessory)

Dimensions
(width x depth x height) approx. 139 x 38.5 x 80mm

Weight
approx. 660g (with battery)

Scope of Delivery
Charger 100-240V with 2 mains cables (Euro, USA, varies in some export markets) and 1 car charging cable, lithium ion battery, carrying strap, body bayonet cover, cover for accessory shoe

Subject to changes in design, production and availability.

LEICA SERVICE ADDRESSES

Leica Product Support
The Product Support Department at Leica AG can answer any technical questions relating to Leica products, including support for the supplied software in writing, on the phone or by email. They are also the contact point for purchasing advice and to order instruction manuals. Alternatively, you can send us your questions using the contact form on the Leica Camera AG homepage.

Leica Camera AG
Product Support/Software Support
Am Leitz-Park 5
35578 Wetzlar, Germany
Phone: +49 (0)6441-2080-111 /-108
Fax: +49(0)6441-2080-490
info@leica-camera.com / software-support@leica-camera.com

Leica Customer Care
The Leica Camera AG Customer Care department or the repair service provided by authorized Leica agents in your country are available for service, maintenance and repairs of your Leica equipment (see the warranty card for a list of addresses).

Leica Camera AG
Customer Care
Am Leitz-Park 5
35578 Wetzlar, Germany
Phone: +49(0)6441-2080-189
Fax: +49(0)6441-2080-339
customer.care@leica-camera.com