T E S T R E P O R T
No.: TR18-1-0044501T05a-C2

According to:
FCC Regulations
Part 15.247 (DTS)

ISED-Regulations
RSS-247, Issue 2
RSS-Gen, Issue 4

for

Leica Camera AG

Digital camera Type No. 6847
FCC-ID: N5A6847
ISED: 11245A-6847

Laboratory Accreditation and Listings		
Accredited EMC-Test Laboratory	Industry Canada Reg. No.: 3462D-1 Reg. No.: 3462D-2 Reg. No.: 3462D-3	Voluntary Controls for Electromagnetic Emissions Reg. No.: R-4452, C-20009, T-20006, G-20013
AUTHORIZED RF LABORATORY	Lab Code: 20011130-00	MRA US-EU 0003
accredited according to DIN EN ISO/IEC 17025		

CETECOM GmbH
Laboratory Radio Communications & Electromagnetic Compatibility
Im Teelbruch 116 • 45219 Essen • Germany
Registered in Essen, Germany, Reg. No.: HRB Essen 8984
Tel.: + 49 (0) 20 54 / 95 19-954 • Fax: + 49 (0) 20 54 / 95 19-964
E-mail: info@cetecom.com • Internet: www.cetecom.com

The test results relate only to the individual items which have been tested. This report shall not be reproduced in parts without the written approval of the testing laboratory © Copyright: All rights reserved by CETECOM

Table of contents

1. SUMMARY OF TEST RESULTS ... 3

1.1. Tests measurement overview according of US CFR Title 47, Subpart 15C and Canada RSS-Standards: ... 3
1.2. Attestation: ... 4

2. ADMINISTRATIVE DATA ... 5

2.1. Identification of the testing laboratory ... 5
2.2. Test location ... 5
2.3. Organizational items ... 5
2.4. Applicant's details ... 5
2.5. Manufacturer's details ... 5

3. EQUIPMENT UNDER TEST (EUT) ... 6

3.1. TECHNICAL DATA OF MAIN EUT DECLARED BY APPLICANT ... 6
3.2. EUT: Type, S/N etc. and short descriptions used in this test report ... 6
3.3. Auxiliary Equipment (AE): Type, S/N etc. and short descriptions ... 7
3.4. EUT set-ups ... 7
3.5. EUT operating modes ... 8
3.6. Configuration of cables used for testing ... 8

4. DESCRIPTION OF TEST SYSTEM SET-UP'S ... 9

4.1. Test system set-up for conducted measurements on antenna port ... 9
4.2. Test system set-up for AC power-line conducted emission measurements ... 11
4.3. Test system set-up for radiated magnetic field measurements below 30 MHz ... 12
4.4. Test system set-up for radiated electric field measurement 30 MHz to 1 GHz ... 13
4.5. Test system set-up for radiated electric field measurement above 1 GHz ... 14

5. MEASUREMENTS ... 15

5.1. Duty-Cycle ... 15
5.2. RF-Parameter - 6 dB Bandwidth and 99% occupied Bandwith ... 17
5.3. Maximum peak conducted output power ... 19
5.4. RF-Parameter - Power Spectral Density ... 21
5.5. 20 dBc power specification ... 23
5.6. RF-Parameter - Radiated Band Edge compliance measurements ... 26
5.7. General Limit - Conducted emissions on AC-Power lines ... 28
5.8. General Limit - Radiated field strength emissions below 30 MHz ... 29
5.9. General Limit - Radiated field strength emissions, 30 MHz - 1 GHz ... 31
5.10. General Limit – Radiated field strength emissions, above 1 GHz ... 33
5.11. Measurement uncertainties ... 35

6. ABBREVIATIONS USED IN THIS REPORT ... 36

7. ACCREDITATION DETAILS OF CETECOM'S LABORATORIES AND TEST SITES ... 36

8. INSTRUMENTS AND ANCILLARY ... 37

8.1. Used equipment "CTC" ... 37

9. VERSIONS OF TEST REPORTS (CHANGE HISTORY) ... 42

Table of annex

	Total pages
Annex 1: Measurement diagrams	76
Annex 2: External photographs of EUT	10
Annex 3: Internal photographs of EUT	TO BE SUPPLIED BY APPLICANT
Annex 4: Test set-up photographs	7

The listed attachments are an integral part of this report

1. Summary of test results

The test results apply exclusively to the test samples as presented in this Report. The CETECOM GmbH does not assume responsibility for any conclusions and generalizations taken in conjunction with other specimens or samples of the type of the item presented to tests. Also we refer on special conditions which the applicant should fulfill according §2.927 to §2.948, special focus regarding modification of the equipment and availability of sample equipment for market surveillance tests.

The Equipment Under Test (in this report, hereinafter referred as EUT) supports radiofrequency technologies. This test report shows results for W-LAN on 2.4GHz ISM band only. Other implemented wireless technologies were not considered within this test report.

Following tests have been performed to show compliance with applicable FCC Part 2, Part 15C of the FCC CFR Title 47 Rules, Edition 2017 and Canadian RSS-247, Issue 2 standards.

1.1. Tests measurement overview according of US CFR Title 47, Subpart 15C and Canada RSS-Standards:

Test cases	Port	References & Limits			EUT set-up	EUT opera-ting mode	Result
		FCC Standard	RSS Section	Test Limit			
TX-Mode							
Timing of transmitter (pulsed operation)	Antenna Terminal or enclosure	§15.35	RSS-Gen, Issue 4	--	3	1+2+3	--
6 dB bandwidth	Antenna terminal (conducted)	§15.247(a)(2)	RSS-247, Chapter 5.2(a) RSS-Gen Issue 4: Chapter 4.6.2	≥ 500 kHz for DTS systems	3	1+2+3	passed
99% occupied bandwidth	Antenna terminal (conducted)	2.1049(h)	RSS-Gen Issue 4: Chapter 6.6	99% Power bandwidth	3	1+2+3	for Information only
Transmitter Peak output power	Antenna terminal (conducted)	§15.247(b)(3)	RSS-247, Chapter 5.4(d)	1 Watt Peak	3	1+2+3	passed
Transmitter Peak output power radiated	Enclosure + Inter-connecting cables (radiated)	§15.247(b)(4)	RSS-247, Chapter 5.4(d	< 4 Watt (EIRP) for antenna with directional gain less 6dBi	--	--	Passed (calculated)
Out-Of-Band RF- emissions Band-Edge emissions	Antenna terminal (conducted)	§15.247 (d)	RSS-247, Chapter 5.5	20 dBc	3	1+2+3	passed
Power spectral density	Antenna terminal (conducted)	§15.247(e)	RSS-247, Chapter 5.2(b)	8dBm in any 3 kHz band	3	1+2+3	passed
General field strength emissions + restricted bands	Enclosure + Inter-connecting cables (radiated)	§15.247 (d) §15.205 §15.209	RSS-247 Issue 2, Chapter 3.3 RSS-Gen: Issue 4: §8.9 Table 4+5+6	Emissions in restricted bands must meet the general field-strength radiated limits	1+2	1+2+3	passed

AC-Power Lines Conducted Emissions	AC-Power lines	§15.207	RSS-Gen, Issue 4: Chapter 8.8, Table 3	FCC §15.107 class B limits §15.207 limits ISED: Table 3, Chapter 8.8	1	1	passed
RX Mode							
RECEIVER Radiated emissions	Enclosure + Inter-connecting cables (radiated)	§15.109 §15.33 §15.35	RSS-Gen, Issue 4: Chapter 7.1.2	FCC 15.109 class B limits ISED-limits: Table 2	--	--	See separate test report

RF-Exposure Evaluation (separation distance user to RF-radiating element greater 20cm)							
Test cases	**Port**	**References & Limits**			**EUT set-up**	**EUT opera-ting mode**	**Result**
		FCC Standard	**RSS Section**	**Test Limit**			
Radio frequency radiation exposure requirements	Cabinet + Inter-connecting cables (radiated)	§1.1310(b) §2.1091 §2.1093	RSS-102 Issue 5	**SAR-Limits** **FCC:** 1.1310(b) **ISED:** Table 3	--	--	See separate test report
				RF-Field Strength Limits: **FCC:** "general population/ uncontrolled" environment Table 1 **ISED:** Table 4	--	--	--

Remark: --

Test report 18-1-0044501T05a-C2, dated 2018-10-11, is replacing original test report 18-1-0044501T05a-C1, dated 2018-09-13. The replaced test report gets invalid herewith.

1.2. Attestation:

I declare that all measurements were performed by me or under my supervision and that all measurements have been performed and are correct to my best knowledge and belief to Industry Canada standards. All requirements as shown in above table are met in accordance with enumerated standards.

Digital unterschrieben von Niels Jeß
DN: cn=Niels Jeß, o=CETECOM GmbH, ou=Branch Duesseldorf, email=niels.jess@cetecom.com, c=DE
Datum: 2018.10.11 23:12:30 +02'00'

.....
Dipl.-Ing. Niels Jeß
Responsible for test section

Digital signiert von: Dipl.-Ing. Christian Lorenz
Datum: 2018.10.11 08:44:29 +01'00'

.....
Dipl.-Ing. C. Lorenz
Responsible for test report

2. Administrative Data

2.1. Identification of the testing laboratory

Company name:	CETECOM GmbH
Address:	Im Teelbruch 116 45219 Essen - Kettwig Germany
Responsible for testing laboratory:	Dipl.-Ing. Niels Jeß

2.2. Test location

2.2.1. Test laboratory "CTC"

Company name:	see chapter 2.1. Identification of the testing laboratory

2.3. Organizational items

Responsible for test report:	Dipl.-Ing. C. Lorenz
Project leader:	Dipl.-Ing. C. Lorenz
Receipt of EUT:	2018-06-26
Date(s) of test:	2018-06-27 to 2018-09-10
Date of report:	2018-10-11
Version of template: 13.02	

2.4. Applicant's details

Applicant's name:	Leica Camera AG
Address:	Am Leitz-Park 5 35578 Wetzlar Germany
Contact person:	Mr. Peter Schober

2.5. Manufacturer's details

Manufacturer's name:	please see Applicant's details
Address:	please see Applicant's details

3. Equipment under test (EUT)

3.1. TECHNICAL DATA OF MAIN EUT DECLARED BY APPLICANT

Frequency range (US/Canada -bands)	☒ 2412 MHz (Channel 1) to 2462 MHz (Channel 11) for 20MHz BW ☐ 2422 MHz (Channel 3) to 2453 MHZ (channel 9) for 40MHz BW		
Type of modulation	See chapter 3.2		
Number of channels (USA/Canada -bands)	1 to 11		
Antenna Type	☐ Integrated ☒ External, no RF- connector ☒ External, separate RF-connector		
Antenna Gain	Max. -4.75 dBi gain according applicants information in 2.4 GHz band		
Antennas transmit mode	☒ 1 antenna ☒ 2 diversity antennas – switched diversity mode (one moment in time one antenna is used) ☒ 2 or more smart antenna system without beamforming ☐ 2 or more smart antenna system with beamforming		
MAX Field strength (radiated):	97.87 dBµV/m@3m distance on nominal 2462 MHz (97.87 dBµV/m – 95.2dB = 2.67 dBm@3m)		
Installed options	☐ battery charging option ☒ GPS (not tested within this test report)		
Power supply	☒ Internal rechargeable battery Li-Ion: 7.3V nominal voltage ☒ over AC/DC adapter: 120V/60 Hz (other set-up)		
Special EMI components	--		
FW/Software:	0.18.28.5		
EUT sample type	☒ Production	☒ Pre-Production	☐ Engineering
FCC label attached	☐ yes	☐ no	☒ electronic labelling

3.2. EUT: Type, S/N etc. and short descriptions used in this test report

Short descrip-tion*)	EUT	Type	S/N serial number	HW hardware status	SW software status
EUT A	Digital camera	Type No. 6847	P-021	Prototype	0.18.28.5
EUT B	Digital camera	Type No. 6847	P-099	Prototype	0.18.28.5

*) EUT short description is used to simplify the identification of the EUT in this test report.

3.3. Auxiliary Equipment (AE): Type, S/N etc. and short descriptions

AE short descrip-tion *)	Auxiliary Equipment	Type	S/N serial number	HW hardware status	SW software status
AE 1	Auto focus lens	--	--	--	--
AE 2	Li-Ion Battery	--	--	--	--
AE 3	Audio Adapter	--	--	--	--
AE 4	Multifunction Handgrip	--	--	--	--
AE 5	AC-Adapter	--	--	--	--
AE 6	SanDisk Extreme Pro SD-Card	--	--	--	--
AE 7	Flash SF40	--	--	--	--
AE 8	HDMI cable	--	--	--	--
AE 9	Termination Box 50 Ohm	--	--	--	--
AE 10	Remote control cable	--	--	--	--
AE 11	USB cable	--	--	--	--

*) AE short description is used to simplify the identification of the auxiliary equipment in this test report.

3.4. EUT set-ups

EUT set-up no.*)	Combination of EUT and AE	Remarks
set. 1	EUT A + AE 2 + AE 3 + AE 4+ AE 5 + AE 6 + AE 7 + AE 8 + AE 9 + AE10 + AE 11	Radiated set-up without objective
set. 2	EUT A + AE 1 + AE 2 + AE 3 + AE 4+ AE 5 + AE 6 + AE 7 + AE 8 + AE 9 + AE10 + AE 11	Radiated set-up with objective
set. 3	EUT B + AE 2 + AE4 + AE 5 + AE 6	RF-Conducted test set-up

*) EUT set-up no. is used to simplify the identification of the EUT set-up in this test report.

3.5. EUT operating modes

EUT operating mode no.*)	Description of operating modes	Additional information
op. 1	WLAN Continuous TX-Mode b-Mode	The EUT was put to continuous transmissions mode with help of a special firmware software. Data rate: 1 MBit
op. 2	WLAN Continuous TX-Mode g-Mode	The EUT was put to continuous transmissions mode with help of a special firmware software. Data rate: 54 MBit
op. 3	WLAN Continuous TX-Mode n-Mode	The EUT was put to continuous transmissions mode with help of a special firmware software. Data rate: MCS7

*) EUT operating mode no. is used to simplify the test report.

3.6. Configuration of cables used for testing

Cable number	Item	Type	S/N serial number	HW hardware status	Cable length
Cable 1	USB cable	--	--	--	--
Cable 2	HDMI-cable	--	--	--	--
Cable 3	Audio Adapter S	--	--	--	--
Cable 4	Remote control cable	--	--	--	--

4. Description of test system set-up's

4.1. Test system set-up for conducted measurements on antenna port

Conducted Set-up W1

W-LAN/Zigbee conducted RF-Setup 1 (W1 Set-up)

General description:

The EUT's RF-signal is coupled out by a suitable antenna coupling connector (1). The signal is first attenuated (2) then connected to the power meter (3) for conducted power measurements. The specific attenuation loss is determined prior to the measurement within a set-up attenuation measurement. These are then taken into account by correcting the measurement readings.

Schematic:

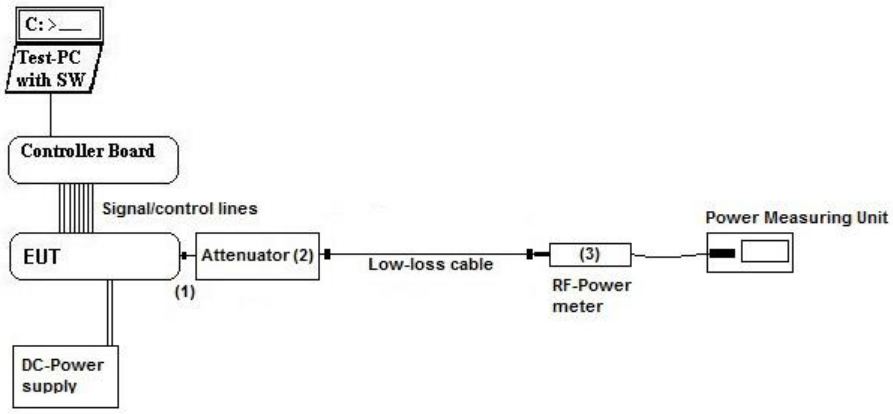

Testing method: ANSI C63.10:2013, KDB 558074 D01 DTS Meas.Guidance v03r05

Used Equipment

Passive Elements	Test Equipment	Remark:
☒ 20 dB Attenuator ☒ Low loss RF-cables ☒	☒ Power Meter ☒ DC-Power Supply ☒ Spectrum-Analyser	See List of equipment under each test case and chapter 8.1 for calibration info

Measurement uncertainty See chapter 8.1

Conducted Set-up W2

W-LAN/Zigbee conducted RF-Setup 2 (W2 Set-up)

General description:

The EUT's RF-signal is coupled out by a suitable antenna coupling connector (1). The signal is first attenuated (2) then connected to spectrum-analyzer (4) for RF-conducted measurements. The specific attenuation loss is determined prior to the measurement within a set-up attenuation measurement. These are then taken into account by correcting the measurement readings of the spectrum-analyzer.

Schematic:

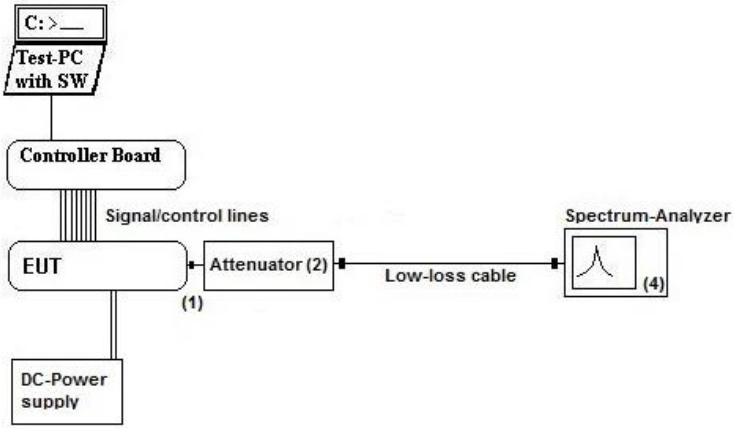

Testing method: ANSI C63.10:2013, KDB 558074 D01 v04 (April 2017)

Used Equipment

Passive Elements	Test Equipment	Remark:
☒ 20 dB Attenuator ☒ Low loss RF-cables	☒ Power Meter ☒ DC-Power Supply ☒ Spectrum-Analyser	See List of equipment under each test case and chapter 8.1 for calibration info

Measurement uncertainty See chapter 8.1

4.2. Test system set-up for AC power-line conducted emission measurements

Specification: ANSI C63.4-2014 chapter 7, ANSI C63.10-2013 chapter 6.2

General Description: The radio frequency voltage conducted back into the AC power line in the frequency range 150 kHz to 30 MHz has to be investigated. Compliance should be tested by measuring the radio frequency voltage between each power line and ground at the power terminals in the stated frequency range.
A 50 Ohm / 50 µH line impedance stabilization network (LISN) is used coupling the interface to the measurement equipment. The EUT power input leads are connected through the LISN to the AC-power source. The LISN enclosure is electrically connected to the ground plane. The measuring instrument is connected to the coaxial output of the LISN.
Tabletop devices were set-up on a 80 cm height above reference ground plane, floor standing equipment 10 cm raised above ground plane. Measurements have been performed on each phase line and neutral line of the devices AC-power lines. The EUT was power supplied with 120 V/60 Hz. The EUT was tested in the defined operating mode and installed (connected) to accessory equipment according the general description of use given by the applicant.

Schematic:

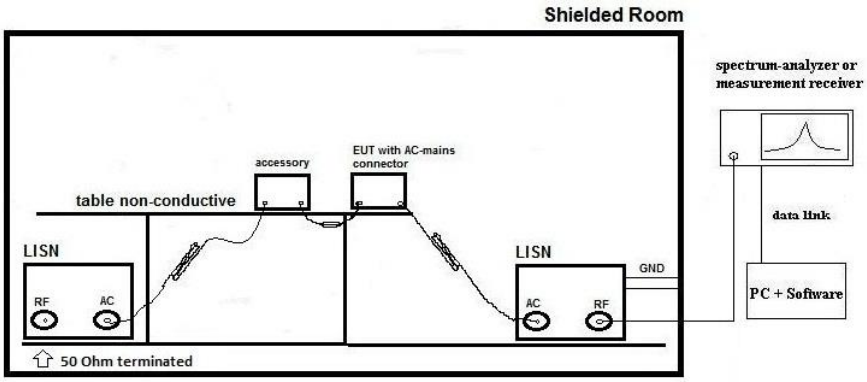

Only schematic view, we refer to figure 6, 7 and 8 of ANSI C63.4-2009 for more details.

Testing method:

Exploratory, preliminary measurements as a first step, determines the worst-case phase line (neutral or phase) as well as the most critical operating mode of the equipment. A complete frequency-sweep with PK-Detector is performed on each current-carrying conductor.

Final testing for power phases and critical frequencies (Margin to AV- or QP limit lower than 3 dB) as a second step includes measurements with receivers detector set to Quasi-Peak and Average.

Formula:

$V_C = V_R + C_L$ (1)

$M = L_T - V_C$ (2)

V_C = measured Voltage –corrected value
V_R = Receiver reading
C_L = Cable loss
M = Margin
L_T = Limit

Values are in dB, positive margin means value is below limit.

4.3. Test system set-up for radiated magnetic field measurements below 30 MHz

Specification: ANSI C63.4-2014 §5.3, §8.2.1, §8.3.1.1+§8.3.2.1 , ANSI C63.10-2013 chapter 6.4 (§6.4.4.2)

General Description: Evaluating the radiated field emissions are done first by an exploratory emission measurement and a final measurement for most critical frequencies determined.

The loop antenna was placed at 1 m height above ground plane and 3 m measurement distance from set-up for investigations. Because of reduced measurement distance, correction data were applied, as stated in chapter "General Limit - Radiated field strength emissions below 30 MHz". The tests are performed in the semi anechoic room recognized by the regulatory commission.

Schematic:

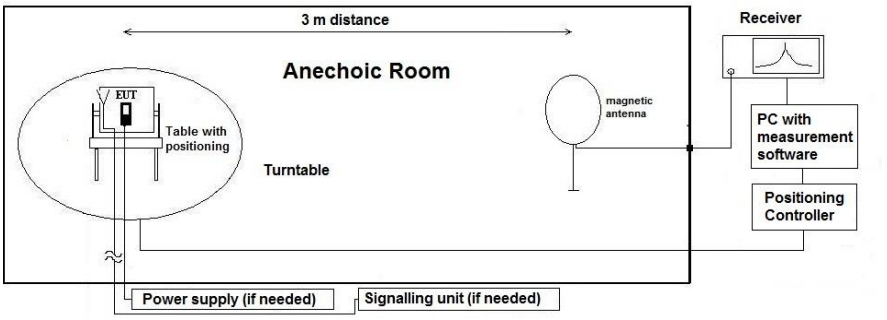

Testing method:

Exploratory, preliminary measurement
The EUT and it's associated accessories are placed on a non-conductive position manipulator (tipping device) of 0.8 m height which is placed on the turntable. By rotating the turntable (step 90°, range 0°to 360°) and the EUT itself either on 3-orthogonal axis (portable equipment) or 2-orthogonal axis (defined operational position of EUT), the emission spectrum was recorded. The loop antenna was moved at least to 2-perpendicular axes (antenna vector in direction of EUT and parallel to EUT) in order to maximize the emissions. The results are documented in a diagram. Critical frequencies (low margin to limit) are saved within a data reduction table for further investigations. If various operating modes are supported, further investigations are made to find the worst-case. Also the interconnection cables and equipment position were varied in order to maximize the emissions.

Final measurement on critical frequencies
Based on the exploratory measurements, the most critical frequencies are re-measured by maintaining the EUT's worst-case operation mode, cable position, etc.

First a frequency zoom around the critical frequency is done to locate the frequency more precisely. After this step, for all identified critical frequencies, the maximum peak was determined.

Following parameters were varied: the turntable angle continuously in the range 0 to 360 degree, the EUT itself either over 3-orthogonal axis (not defined usage position) or 2-orthogonal axis (defined usage position).

On the determined worst-case position, a final measurement with necessary bandwidth and detector according standard has been carried out.

Formula:

$E_C = E_R + AF + C_L + D_F - G_A$

$M = L_T - E_C$

AF =Antenna factor
C_L = Cable loss
D_F= Distance correction factor
E_C = Electrical field – corrected value
E_R = Receiver reading
G_A= Gain of pre-amplifier (if used)
L_T = Limit
M = Margin

All units are dB-units, positive margin means value is below limit.

Distance correction: Reference for applied correction (extrapolating) factors due to reduced measurement distance:
ANSI C63.10:2013, §6.4.4.2 - Equations (2) + (3) + (4)

4.4. Test system set-up for radiated electric field measurement 30 MHz to 1 GHz

Specification: ANSI C63.4-2014 chapter 8.2.3, ANSI C63.10-2013 chapter 6.5

General Description: Evaluating the field emissions have to be done first by an exploratory emissions measurement and a final measurement for most critical frequencies. The tests are performed in a NSA-compliant semi anechoic room (SAR) recognized by the regulatory commissions.

Schematic:

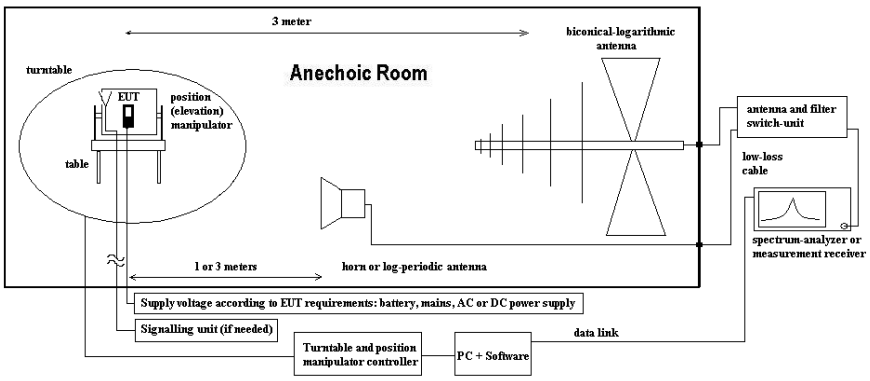

Testing method:

Exploratory, preliminary measurements
The EUT and its associated accessories are placed on a non-conductive position manipulator (tipping device) of 0.8 m height which is placed on the turntable. By rotating the turntable (range 0° to 360°, step 90°) and the EUT itself either on 3-orthogonal axis (portable equipment) or 2-orthogonal axis (defined operational position of EUT) the emission spectrum and it's characteristics was recorded with an EMI-receiver, broadband antenna and software.

Measurement antenna: horizontal and vertical, heights: 1,0 m and 1,82 m as worst-case determined by an exploratory emission measurements. The results are documented in a diagram. Critical frequencies (low margin to limit) are saved within a table for further investigations. If various operating modes are supported, further investigations are made to find the worst-case of them. Also the interconnection cables and equipment position were varied in order to maximize the emissions.

Final measurement on critical frequencies
Based on the exploratory measurements, the most critical frequencies are re-measured by maintaining the EUT's worst-case operation mode, cable position, etc. either on 10m OATS or 3m semi-anechoic room.

First a frequency zoom around the critical frequency is done to locate the frequency more precisely. After this step, for all identified critical frequencies, the maximum peak was determined.

Following parameters were varied: the turntable angle continuously in the range 0 to 360 degree, the EUT itself either over 3-orthogonal axis (not defined usage position) or 2-orthogonal axis (defined usage position). The measurement antenna height between 1 m and 4 m.

On the determined worst-case position, a final measurement with necessary bandwidth and detector according standard has been carried out.

Formula:

$E_C = E_R + AF + C_L + D_F - G_A$ (1)

$M = L_T - E_C$ (2)

AF = Antenna factor
C_L = Cable loss
D_F = Distance correction factor (if used)
E_C = Electrical field – corrected value
E_R = Receiver reading
G_A = Gain of pre-amplifier (if used)
L_T = Limit
M = Margin

All units are dB-units, positive margin means value is below limit.

4.5. Test system set-up for radiated electric field measurement above 1 GHz

Specification: ANSI C63.4-2014 chapter 8.3, ANSI C63.10-2013 chapter 6.6.3.3 & 6.6.4

General Description: Evaluating the emissions have to be done first by an exploratory emissions measurement and a final measurement for most critical frequencies. The tests are performed in a CISPR 16-1-4:2010 compliant fully anechoic room (FAR) recognized by the regulatory commission. The measurement distance was set to 3 meter for frequencies up to 18 GHz and 2 meter above 18 GHz. A logarithmic periodic antenna is used for the frequency range 30 MHz to 1 GHz. Horn antennas are used for frequency range 1 GHz to 40 GHz. The EUT is aligned within 3 dB beam width of the measurement antenna with three orthogonal axis measurements on the EUT.

Schematic:

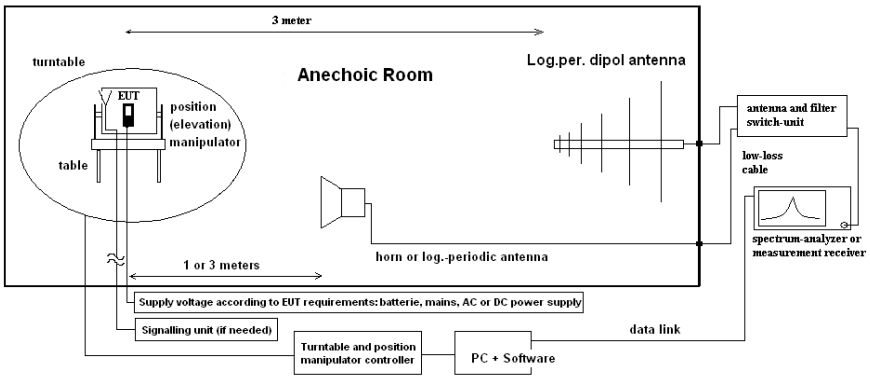

Testing method:

Exploratory, preliminary measurements
The EUT and its associated accessories are placed on a non-conductive position manipulator (tipping device) of 1.55 m height which is placed on the turntable. By rotating the turntable (range 0° to 360°, step 15°) and the EUT itself either on 3-orthogonal axis (portable equipment) or 2-orthogonal axis (defined operational position of EUT) the emission spectrum and it's characteristics was recorded with an EMI-receiver, broadband antenna and software.
The measurements are performed in horizontal and vertical polarization of the measurement antennas. The results are documented in a diagram. Critical frequencies (low margin to limit) are saved within a table for further investigations. If various operating modes are supported, further investigations are made to find the worst-case of them. Also the interconnection cables and equipment position were varied in order to maximize the emissions.

Final measurement on critical frequencies
Based on the exploratory measurements, the most critical frequencies are re-measured by maintaining the EUT's worst-case operation mode, cable position, etc.

First a frequency zoom around the critical frequency is done to locate the frequency more precisely. After this step, for all identified critical frequencies, the maximum peak was determined. Following parameters were varied: the turntable angle continuously in the range 0 to 360 degree, the EUT itself over 3-orthogonal axis and the height for EUT with large dimensions.

On the determined worst-case position, a final measurement with necessary bandwidth and detector according standard has been carried out.
On the determined worst-case position, a final measurement with necessary bandwidth and detector according standard has been carried out.

Formula:

$E_C = E_R + AF + C_L + D_F - G_A$ (1)

$M = L_T - E_C$ (2)

E_C = Electrical field – corrected value
E_R = Receiver reading
M = Margin
L_T = Limit
AF = Antenna factor
C_L = Cable loss
D_F = Distance correction factor (if used)
G_A = Gain of pre-amplifier (if used)

All units are dB-units, positive margin means value is below limit.

5. Measurements

5.1. Duty-Cycle

5.1.1. Test location and equipment **(for reference numbers please see chapter 'List of test equipment')**

Ambient Climatic conditions		Temperature: (22±2)°C		Rel. humidity: (45±15)%		
test site	☐ 441 EMI SAR	☐ 348 EMI cond.	☐ 443 EMI FAR	☒ 347 Radio.lab.	☐ 337 OATS	☐
equipment	☐ 331 HC 4055	☐	☐	☐	☐	☐
spectr. analys.	☐ 683 FSU26	☐ 120 FSEM	☐ 264 FSEK	☒ 714 FSW67	☐	☐
power meter	☐ 262 NRV-S	☐ 266 NRV-Z31	☐ 265 NRV-Z33	☐ 261 NRV-Z55	☐ 356 NRV-Z1	☐
multimeter	☐ 341 Fluke 112	☐	☐	☐	☐	☐
DC power	☐ 086 LNG50-10	☐ 087 EA3013	☐ 354 NGPE 40	☐ 349 car battery	☐ 350 Car battery	☒ 463 HP3245A
line voltage	☐ 230 V 50 Hz via public mains		☐060 120 V 60 Hz via PAS 5000			
otherwise	☒ 630 Attenuator 20dB	☒ K4 Cable				

Method of measurement: ☒ conducted
☐ radiated

A special firmware program is used for test purposes. In opposite to normal operating mode a higher duty-cycle is set in order to facilitate the measurements. This is maximized at the extent possible.

The necessary duty-cycle correction factor is determined on nominal conditions on one channel in each operable frequency-band. It is assumed that no noticeable changes occur when tested on other channels or climatic conditions.

Results:

WLAN-Modes	Marker 1 [BTS ON']	Marker 2 [BTS ON']	TX on	TX off	Converted to DC	10log(1/DC)
	us	us	us	us		
b-Mode						
1MBit	8190,000000	8240,000000	8190,00000	50,00000	0,99393	0,02643
2MBit	4193,270000	4230,000000	4193,27000	36,73000	0,99132	0,03788
5.5MBit	1648,000000	1692,000000	1648,00000	44,00000	0,97400	0,11443
11MBit	920,000000	964,620000	920,00000	44,62000	0,95374	0,20568
b-Mode						
6MBit	1360,000000	1410,620000	1360,00000	50,62000	0,9641	0,1587
9MBit			not applicable	not applicable	not applicable	not applicable
12MBit	691,970000	742,010000	691,97000	50,04000	0,9326	0,3032
18MBit	467,970000	518,010000	467,97000	50,04000	0,9034	0,4412
24MBit	355,970000	406,010000	355,97000	50,04000	0,8768	0,5712
36MBit	243,970000	294,010000	243,97000	50,04000	0,8298	0,8103
48MBit	187,976000	238,019000	187,97600	50,04300	0,7898	1,0251
54MBit	171,976000	222,019000	171,97600	50,04300	0,7746	1,1092
n-Mode						
MCS0	1271,790000	1321,830000	1271,79000	50,04000	0,9621	0,1676
MCS1	655,740000	705,780000	655,74000	50,04000	0,9291	0,3194
MCS2	447,800000	497,843000	447,80000	50,04300	0,8995	0,4601
MCS3	347,714000	398,619000	347,71400	50,90500	0,8723	0,5934
MCS4	243,313000	294,219000	243,31300	50,90600	0,8270	0,8251
MCS5	191,544000	242,450000	191,54400	50,90600	0,7900	1,0235
MCS6	176,014000	226,057000	176,01400	50,04300	0,7786	1,0867
MCS7	160,052000	210,095000	160,05200	50,04300	0,7618	1,1815

Calculated with following formulas:

Duty cycle:	$x = \frac{Tx_{on}}{Tx_{on} + Tx_{off}}$	Duty cycle factor [dB]:	$10\log\left(\frac{1}{x}\right)$

☒ The results were corrected in order to evaluate for worst-case result each time when average values are necessary for example average radiated emissions or similar
☐ No correction necessary: Duty-Cycle > 98%

5.2. RF-Parameter - 6 dB Bandwidth and 99% occupied Bandwith

5.2.1. Test location and equipment (for reference numbers please see chapter 'List of test equipment')

test site	☐ 441 EMI SAR	☐ 348 EMI cond.	☐ 443 EMI FAR	☒ 347 Radio.lab.	☐ 337 OATS	☐
spectr. analys.	☐ 584 FSU	☐ 120 FSEM	☐ 264 FSEK	☐ 489 ESU	☒ 683 FSU26	☐
attenuator	☒ 530 20 dB	☐	☐	☐	☐	☐
signaling	☐ 392 MT8820A	☐ 436 CMU	☐ 547 CMU			
DC power	☒ 463 HP3245A	☐ 087 EA3013	☐ 354 NGPE 40	☐ 086 LNG50-10	☐	☐
Power supply voltage	☐ V DC		☐ 060 120 V 60 Hz via PAS 5000			
Others	☐ 613 20dB Attenuator		☒ cable K5			

5.2.2. References of occupied and emission bandwidth

§15.247(a)(2), RSS-247, Chapter 5.2(a); RSS-Gen Issue 4: Chapter 4.6.2

(1) *Frequency hopping systems shall have hopping channel carrier frequencies separated by a minimum of 25 kHz or the 20 dB bandwidth of the hopping channel, whichever is greater. Alternatively, frequency hopping systems operating in the 2400-2483.5 MHz band may have hopping channel carrier frequencies that are separated by 25 kHz or two-thirds of the 20 dB bandwidth of the hopping channel, whichever is greater, provided the systems operate with an output power no greater than 125 mW.*

(2) *DSSS Systems using digital modulation techniques may operate in the 902-928 MHz, 2400-2483.5 MHz, and 5725-5850 MHz bands. The minimum 6 dB bandwidth shall be at least 500 kHz.*

5.2.3. Test condition and measurement test set-up

Signal ink to test system (if used):	☐ air link	☐ cable connection	☒ none
EUT-grounding	☒ none	☐ with power supply	☐ additional connection
Equipment set up	☒ table top		☐ floor standing
Climatic conditions	Temperature: (22±3°C)		Rel. humidity: (40±20)%
General measurement procedures	Please see chapter "Test system set-up for conducted RF-measurement at antenna Port" (W2 Set-up)		

5.2.4. EUT Settings:

The EUT was instructed to send with maximum power (if adjustable) according applicants instructions.
Different modulation characteristics have been checked, e.g. data rates which EUT can operate.

5.2.5. Measurement method:

Three carrier frequencies (low/middle/high) were used for showing the compliance with this requirement. A DELTA Marker method was set to measure the bandwidth compared to the highest In-Band power. The operating modes have been varied (e.g. data rate, modulation scheme, etc.). If applicable the hopping-mode is switched off.

Also the **99% emission bandwidth** was measured. Two markers are placed on frequency points such that left to lower f-marker and right to higher f-marker only 1% of the TX-power is contained. Between the markers, 99% of the power is laying. The RBW value is readjusted and the measurement repeated until the RBW/EBW ratio is around 1%.

5.2.6. Spectrum-Analyzer settings:

Span	Set as to fully display the emissions + 30%
Scale y display	approximate 30dB below the maximum PEAK level
Resolution Bandwidth (RBW)	☐ ANSI 63.10:2013 Set to initial value approx 1% to 5% of the emission bandwidth, re-adjust and proof that RBW/EBW is between 1% and 5% ☒ KDB558074v04
Video Bandwidth (VBW)	Minimum 3 times the resolution bandwidth
Sweep time	Auto -coupled
Detector	Peak detector
Sweep mode	Repetitive Mode, MAX-HOLD, trace stabilization

5.2.7. Results:

For graphical results pls. see annex 1 to this test report.

6dB BANDWIDTH:

Set-up no.: 1 Op. Mode: 1	**6dB BANDWIDTH [MHz]**		
T_{NOM} =21°C, V_{NOM} = 3V	Low channel = 1 (2412 MHz)	Middle channel = 6 (2437 MHz)	High channel = 11 (2462 MHz)
Measured Level b-Mode @1Mbps	10.30	**10.40**	**10.40**
Measured Level g-Mode @54Mbps	16.70	16.70	**16.80**
Measured Level n-Mode @MCS0	**17.80**	**17.80**	**17.80**
Measured Level n-Mode @MCS7	**18.00**	**18.00**	**18.00**
Maximum value			

Remark: 1.) see diagrams and results for different modulation types (Data rates) in separate document A1 2.) maximum 6dB value high-lined

Additional also the 99% occupied bandwidth were measured for worst-case 6dB bandwidth.

99% OCCUPIED BANDWIDTH:

Set-up no.: 1 Op. Mode: 1	**99% Bandwidth [MHz]**		
T_{NOM} =21°C, V_{NOM} = 3V	Low channel = 1 (2412 MHz)	Middle channel = 6 (2437 MHz)	High channel = 11 (2462 MHz)
Measured Level b-Mode @1Mbps	--	--	13.9595
Measured Level g-Mode @54Mbps	--	--	16.7505
Measured Level n-Mode @MCS7	--	--	**17.8606**
Maximum value			

Remark:

VERDICT: DTS system requirements for 6dB-bandwidth according §15.247 (BW > 500kHz) passed

5.3. Maximum peak conducted output power

5.3.1. Test location and equipment (for reference numbers please see chapter 'List of test equipment')

test location	☒ CETECOM Essen (Chapter. 2.2.1)		☐ 443 System CTC-FAR-EMI-		☐ Please see Chapter. 2.2.3	
test site	☐ 441 EMI SAR	☐ 487 SAR NSA	☒ 347 Radio.lab.		☐	☐
receiver	☐ 377 ESCS30	☐ 001 ESS	☐ 489 ESU 40	☐	☐	☐
spectr. analys.	☐ 584 FSU	☐ 120 FSEM	☐ 264 FSEK	☐ 489 ESU 40	☒ 683 FSU26	☐
antenna	☐ 574 BTA-L	☐ 133 EMCO3115	☐ 302 BBHA9170	☐ 289 CBL 6141	☐ 030 HFH-Z2	☐ 477 GPS
signaling	☐ 392 MT8820A	☐ 436 CMU	☐ 547 CMU			
otherwise	☐ 266 NRV-Z31	☐ 600 NRVD	☐ 110 USB LWL	☐ 482 Filter Matrix	☐ 378 RadiSense	☒ 693 TS8997
DC power	☐ 456 EA 3013A	☐ 463 HP3245A	☐ 459 EA 2032-50	☐ 268 EA- 3050	☐ 494 AG6632A	☐ 498 NGPE 40
otherwise	☐ 331 HC 4055	☐ 248 6 dB Attenuator	☐ 529 Power divider	☐ - cable OTA20		
	☐ 513 20dB Attenuator		☐ K 4 Cable kit			
line voltage	☐ 230 V 50 Hz via public mains		☒ 060 120 V 60 Hz via PAS 5000			

5.3.2. References

FCC	☒ §15.247(b) (3) + KDB 558074 D01 DTS Meas Guidance v04
ISED	☒ RSS-247, Issue 2: Chapter 5.4(d)
ANSI	☒ ANSI 63.10:2013
Specification	*For systems using digital modulation in the 902-928 MHz, 2400-2483.5 MHz, and 5725-5850 MHz bands: 1 Watt. As an alternative to a peak power measurement, compliance with the one Watt limit can be based on a measurement of the maximum conducted output power. Maximum Conducted Output Power is defined as the total transmit power delivered to all antennas and antenna elements averaged across all symbols in the signalling alphabet when the transmitter is operating at its maximum power control level. Power must be summed across all antennas and antenna elements. The average must not include any time intervals during which the transmitter is off or is transmitting at a reduced power level. If multiple modes of operation are possible (e.g., alternative modulation methods), the maximum conducted output power is the highest total transmit power occurring in any mode.*

5.3.3. EUT settings:

The EUT was instructed to send with maximum power (if adjustable) according applicants instructions.
Different modulation characteristics have been checked, e.g. data rates which EUT can operate.

5.3.4. Test condition and measurement test set-up

Signal link to test system (if used):	☐ air link	☐ cable connection	☒ none
EUT-grounding	☒ none	☐ with power supply	☐ additional connection
Equipment set up	☒ table top 1.5m height		☐ floor standing
Climatic conditions	Temperature: (22±3°C)		Rel. humidity: (40±20)%
General measurement procedures	Please see chapter “Test system set-up for conducted RF-measurement at antenna Port” (W1 Set-up)		

5.3.5. Measurement method and analyzer settings:

The measurement was performed in non-hopping transmission mode with the carrier set to lowest/middle and highest channel. The power was also checked for different data rates, modulation scheme or packet types if applicable.

MEASUREMENT METHOD/ SPECTRUM-ANALYZER SETTINGS:

Measurement Method 1.)	§15.247(b)(3) Maximum Peak	1.) ☒ 9.1.1 Maximum peak conducted output power (RBW > 6dB-bandwidth of the signal) 2.) ☐ 9.1.3. PKPM1 Peak reading power meter (broadband PK meter)
	§15.247(b)(3) Maximum Average	3.) ☐ AVGSA-1 / AVGSA-1 alternative (duty-cycle > 98%) 4.) ☐ AVGSA-2 / AVGSA-2 alternative (duty-cycle < 98%, constant) 5.) ☐ AVGSA-3 / AVGSA-3 alternative (duty-cycle < 98%, not constant) 6.) ☒ AVPM(duty-cycle < 98% (constant) 7.) ☐ AVPM-G (duty-cycle < 98% (constant)
	MIMO	8.) ☐ Summarization of values from two antenna ports
Center Frequency		Nominal channel frequency
Span		30% higher then the EBW measured before
Resolution Bandwidth (RBW)		28MHz
Video Bandwidth (VBW)		80MHz
Sweep time		coupled
Detector		Peak, Max hold mode for method PK1/PK2
Sweep Mode		Repetitive mode, allow trace to stabilize
Analyzer-Mode		☒ gated sweep, Zero-Span mode ☐ activated channel integration method with limits set to the EBW of the signal

Remark 1: guidance 558074 D01 measurement DTS guidance v04

5.3.6. RESULTS

APLICANT'S DECLARED ANTENNA CHARACTERISTICS:

☒ Directional Gain < 6 dBi (measured: difference between measured conducted and radiated eirp. power)
☐ Directional Gain > 6 dBi (measured / applicant's declaration) -> conducted power reduction necessary

- Maximum declared antenna gain [isotropic]: -4.75 dBi

Different modulation types and data rates were tested first with a power average meter according. Chapter 9.2.3.1 KDB558074 D01 v04. In a second step the maximum peak conducted output power was measured for the determined worst-case modulation data/scheme. **Enclosed are only the maximum values for each modulation format**, pls. compare separate document A1 for all results.

Max. Peak Output Power (conducted) [dBm]			
Set-up no: 1 Op-Mode: 1/2/3	Low channel = 1 (2412 MHz)	Middle channel = 6 (2437 MHz)	High channel = 11 (2462 MHz)
Measured Level b-Mode @1Mbps	11.5	12.0	12.4
Measured Level g-Mode @54Mbps	17.6	18.5	19.0
Measured Level n-Mode @MCS6	17.9	18.5	19.1
Limit	1 Watt (30dBm) Peak		

Remark:
1.) External Path Loss -> set as either as correction factor in spectrum-analyzer or activated as transducer table
2.) at this place only each maximum peak power reported, pls. compare separate annex 1 for more details
3.) maximum value among all data rates and modulations, pls. compare separate annex 1 for more details

5.3.6.1. VERDICT: Maximum value of 19.1 dBm Peak (81.28 mW) -> passed

5.4. RF-Parameter - Power Spectral Density

5.4.1. Test location and equipment (for reference numbers please see chapter 'List of test equipment')

test location	☒ CETECOM Essen (Chapter. 2.2.1)		☐ Please see Chapter. 2.2.2		☐ Please see Chapter. 2.2.3	
test site	☐ 441 EMI SAR	☐ 487 SAR NSA	☐ 337 OATS	☒ 347 Radio.lab.	☒ 693 TS8997	☐
receiver	☐ 377 ESCS30	☐ 001 ESS	☐ 489 ESU	☐ 683 FSU26	☐	☐
spectr. analys.	☐ 489 ESU	☐ 120 FSEM	☐ 264 FSEK	☐	☐	☐
power supply	☐ 463 HP3245A	☐ 457 EA 3013A	☐ 463	☐ 268 EA- 3050	☐ 494 AG6632A	☐ 498 NGPE 40
otherwise	☐530 10dB Attenuator			☐ cable K4		

5.4.2. REFERENCES: §15.247(e), RSS-247, Chapter 5.2(b)

(e) *For digitally modulated systems, the power spectral density conducted from the intentional radiator to the antenna shall not be greater than 8 dBm in any 3 kHz band during any time interval of continuous transmission. This power spectral density shall be determined in accordance with the provisions of paragraph (b) of this section. The same method of determining the conducted output power shall be used to determine the power spectral density.*

5.4.3. TEST CONDITION AND MEASUREMENT TEST SET-UP

Signal ink to test system (if used):	☐ air link	☐ cable connection	☒ none
EUT-grounding	☒ none	☐ with power supply	☐ additional connection
Equipment set up	☒ table top		☐ floor standing
Climatic conditions	Temperature: (22±3°C)		Rel. humidity: (40±20)%
General measurement procedures	Please see chapter “Test system set-up for conducted RF-measurement at antenna Port” (W2 Set-up)		

5.4.4. EUT SETTINGS:

The EUT was instructed to send with maximum power (if adjustable) according applicants instructions.
Different modulation characteristics have been checked, e.g. data rates which EUT can operate.

5.4.5. MEASUREMENT METHOD/ SPECTRUM-ANALYZER SETTINGS

Measurement Method	☐ ANSI 63.10:2013	☒ PKPSD-Method ☐ AVGPSD Method
	☒ guidance 558074 D01 measurement DTS guidance v04	
Center Frequency	Nominal channel frequency	
Span	5..30% higher then the EBW measured before	
Resolution Bandwidth (RBW)	> 3 kHz (at least 3 times RBW) - pls. see diagram	
Video Bandwidth (VBW)	> 10 kHz - pls. see diagram	
Sweep time	coupled	
Detector	Peak, Max hold mode for method PKPSD or RMS method AVGPSD	
Sweep Mode	Repetitive mode, allow trace to stabilize (PKPSD) or single (AVGPSD)	
Addition of correction factors	external measuring set-up path-loss	

Remarks:--

5.4.6. RESULTS

Set-up no.: 1 Op. Mode: 1/2/3	**POWER SPECTRAL DENSITY** [dBm/3 kHz]		
	Low channel = 1 (2412 MHz)	Middle channel = 6 (2437 MHz)	High channel = 11 (2462 MHz)
Measured Level b-Mode @1Mbps	-2.15	-1.35	-0.94
Measured Level g-Mode @54Mbps	-2.06	-1.82	-1.17
Measured Level n-Mode @MCS6	-2.20	-1.57	-1.28
Limit	< 8dBm/3 kHz		

Remark: see diagrams for details on frequency in separate annex A1

5.4.7. VERDICT: PASSED

5.5. 20 dBc power specification

5.5.1. TEST LOCATION AND EQUIPMENT (for reference numbers please see chapter 'List of test equipment')

test location	☒ CETECOM Essen (Chapter. 2.2.1)		☒ 443 System CTC-FAR-EMI-		☐ Please see Chapter. 2.2.3	
test site	☐ 441 EMI SAR	☐ 487 SAR NSA	☐ 337 OATS	☒ 347 Radio.lab.	☐	☐
receiver	☐ 377 ESCS30	☐ 001 ESS	☐ 489 ESU	☒ 683 FSU26	☐	☐
spectr. analys.	☐ 489 ESU	☐ 120 FSEM	☐ 264 FSEK	☐	☐	☐
power supply	☒ 463 HP3245A	☐ 457 EA 3013A	☐ 459 EA 2032-50	☐ 268 EA- 3050	☐ 494 AG6632A	☐ 498 NGPE 40
otherwise	☒ 530 20 dB Attenuator			☒ cable K4		

5.5.2. REFERENCE: §15.247, §15.205 / RSS-247, ISSUE 2: CHAPTER 5.5

(d) *In any 100 kHz bandwidth outside the frequency band in which the spread spectrum or digitally modulated intentional radiator is operating, the radio frequency power that is produced by the intentional radiator shall be at least 20 dB below that in the 100 kHz bandwidth within the band that contains the highest level of the desired power, based on either an RF conducted or a radiated measurement, provided the transmitter demonstrates compliance with the peak conducted power limits.*

5.5.3. Test condition and measurement test set-up

Signal ink to test system (if used):		☐ air link	☐ cable connection	☒ none
EUT-grounding		☒ none	☐ with power supply	☐ additional connection
Equipment set up		☒ table top 1.5m height		☐ floor standing
Climatic conditions		Temperature: (22±3°C)		Rel. humidity: (40±20)%
Spectrum-Analyzer settings	Scan frequency range:	☐ 1 – 18 GHz ☐ 18 – 25 GHz ☐ 18 – 40 GHz ☒ other: see diagrams		
	Scan-Mode	☒ 6 dB EMI-Receiver Mode ☐ 3 dB Spectrum analyser Mode		
	Detector	Peak and Average		
	RBW/VBW	100kHz/300kHz		
	Mode:	Repetitive-Scan, max-hold		
	Scan step	40kHz		
	Sweep-Time	Coupled – calibrated display if CW signal otherwise adapted to EUT's individual duty-cycle		
General measurement procedures		Please see chapter "Test system set-up for radiated electric field measurements above 1 GHz" for general measurements procedures in anechoic chamber.		

5.5.4. EUT SETTINGS

For FHHS-systems hopping mode was switched-off so fixed three different channels could be measured.The EUT was instructed to send with maximum power (if adjustable) according to applicants instructions.

5.5.5. MEASUREMENT METHOD

According guidance 558074 D01 measurement DTS guidance V04: the frequency spectrum was investigated for **conducted** spurious emissions values lower than 20dB related to the RF-carrier power value. Three carrier frequencies (low/middle/high channel) were used for showing the compliance with this requirement. First a In-Band Reference level measurement of the carrier was performed. The video bandwidth (VBW) was chosen 3 times the resolution bandwidth (RBW). The frequency scan was up to 10 times the highest channel frequency within the operational mode. The spectrum-analyzer was set to MAX-PEAK Detector, MAX-Hold Mode, trace stabilisation mode.

5.5.6. TABLE OF MEASUREMENT RESULTS:

5.5.6.1. Op. Mode: b-Mode, 1 Mbit

Set-up no.: 1 **Op-Mode: 1**	**RF-Conducted test: 20 dBc spurious emissions**					
Frequency Range	Low channel =1 (2412 MHz) Level Reference (In-Band)= 2.07 dBm Limit = -17.93 dBm		Middle channel = 6 (2437 MHz) Level Reference (In-Band) = 2.47 dBm Limit = -17.53 dBµV /m		High channel = 11 (2462MHz) Level Reference (In-Band)= 2.35 dBm Limit= -17.65 dBm	
	Frequency [MHz]	Value [dBc]	Frequency [MHz]	Value [dBc]	Frequency [MHz]	Value [dBc]
150kHz to 30MHz	--	> 30.0	--	> 40.0	--	> 40.0
30MHz to 2.8 GHz	--	> 40.0	--	> 40.0	--	> 40.0
2.8 to 25 GHz	--	> 40.0	--	> 40.0	--	> 40.0
Band-Edge	--	> 46.43	--		--	> 46.5

Remark: see diagrams in separate document A1
The limit on the diagrams is 20dB under the reference level measured In-Band for each channel

5.5.6.2. Op. Mode: g-Mode

Set-up no.: 1 **Op-Mode: 2**	**RF-Conducted test: 20 dBc spurious emissions**					
Frequency Range	Low channel =1 (2412 MHz) Level Reference (In-Band)= 0.72 dBm Limit= -19.28 dBm		Middle channel = 6 (2437 MHz) Level Reference (In-Band) = 1.69 dBm Limit= -18.31 dBm		High channel = 11 (2462MHz) Level Reference (In-Band)= xxx dBµV /m Limit=xxx dBµV /m	
	Frequency [MHz]	Value [dBc]	Frequency [MHz]	Value [dBc]	Frequency [MHz]	Value [dBc]
150kHz to 30MHz	--	> 40.0	--	> 40.0	--	> 40.0
30MHz to 2.8 GHz	--	> 40.0	--	> 40.0	--	> 40.0
2.8 to 25 GHz	--	> 40.0	--	> 40.0	--	> 40.0
Band-Edge	--	> 25.38	--		--	> 35.03

Remark: see diagrams in separate document A1
The limit on the diagrams is 20dB under the reference level measured In-Band for each channel

5.5.6.3. Op. Mode: n-Mode

Set-up no.: 1 **Op-Mode: 3**	**RF-Conducted test: 20 dBc spurious emissions**					
Frequency Range	Low channel =1 (2412 MHz) Level Reference (In-Band)= 0.80 dBm Limit=-19.28 dBm		Middle channel = 6 (2437 MHz) Level Reference (In-Band) = 1.45 dBm Limit= -18.55 dBm		High channel = 11 (2462MHz) Level Reference (In-Band)= 1.75 dBm Limit=-18.25 dBm	
	Frequency [MHz]	Value [dBc]	Frequency [MHz]	Value [dBc]	Frequency [MHz]	Value [dBc]
150kHz to 30MHz	--	> 40	--	> 40	--	> 40
30MHz to 2.8 GHz	--	> 40	--	> 40	--	> 40
2.8 to 25 GHz	--	> 40	--	> 40	--	> 40
Band-Edge	--	> 25.23	--		--	

Remark: see diagrams in separate document A1

The limit on the diagrams is 20dB under the reference level measured In-Band for each channel

5.5.7. TEST RESULT: PASSED

5.6. RF-Parameter - Radiated Band Edge compliance measurements

5.6.1. Test location and equipment FAR

test site	☐441 EMI SAR	☐348 EMI cond.	☒443 EMI FAR	☐347 Radio.lab.	☐337 OATS	☐
spectr. analys.	☐584 FSU	☐120 FSEM	☐264 FSEK	☒489 ESU 40	☐	☐
antenna meas	☐574 BTA-L	☐289 CBL 6141	☐608 HL 562	☒549 HL025	☐302 BBHA9170	☐477 GPS
antenna meas	☐123 HUF-Z2	☐132 HUF-Z3	☐030 HFH-Z2	☐	☐	☐
antenna subst	☐071 HUF-Z2	☐020 EMCO3115	☐063 LP 3146	☐303 BBHA9170	☐	☐
multimeter	☐341 Fluke 112	☐	☐	☐	☐	☐
signaling	☐392 MT8820A	☐371 CBT32	☐547 CMU	☐594 CMW		
DC power	☐086 LNG50-10	☐087 EA3013	☐354 NGPE 40	☐349 car battery	☐350 Car battery	☐
line voltage	☐ 230 V 50 Hz via public mains		☒060 120 V 60 Hz via PAS 5000			

5.6.2. Requirements/Limits

FCC	☐ Part 15 Subpart B, §15.109 class B ☒ Part 15 Subpart C, §15.209 @ frequencies defined in §15.205 ☒ Part 15 Subpart C, §15.407(b)(1)(2)(3)(4)
ISED	☒ RSS-247, Issue 2, Chapter 6 ☒ RSS-Gen: Issue 4: §8.9, Table 4+5+6
ANSI	☐ C63.4-2014 ☒ C63.10-2013, Chapter 6.10.6

5.6.3. Test condition and measurement test set-up

Signal link to test system (if used):		☐ air link	☐ cable connection	☒ none
EUT-grounding		☒ none	☐ with power supply	☐ additional connection
Equipment set up		☒ table top 1.5m height		☐ floor standing
Climatic conditions		Temperature: (22±3°C)		Rel. humidity: (40±20)%
Spectrum-Analyzer settings	Scan frequency range:	☐ 1 – 18 GHz ☐ 18 – 25 GHz ☐ 18 – 40 GHz ☒ other: see diagrams		
	Scan-Mode	☐ 6 dB EMI-Receiver Mode ☒ 3 dB Spectrum analyser Mode		
	Detector	Peak and Average		
	RBW/VBW	Left band-edge: 100kHz/300kHz Right band-edge: 1 MHz / 3 MHz		
	Mode:	Repetitive-Scan, max-hold		
	Scan step	40kHz or 400 kHz		
	Sweep-Time	Coupled – calibrated display if CW signal otherwise adapted to EUT's individual duty-cycle		
General measurement procedures		Please see chapter "Test system set-up for radiated electric field measurements above 1 GHz" for general measurements procedures in anechoic chamber.		

5.6.4. Measurement Method

For uncritical results where a measurement resolution bandwidth of 1MHz can clearly show the compliance without influencing the results, a field strength measurement was performed to show compliance.

For critical results a Marker-Delta marker method was used for showing compliance to restricted bands. The method is according ANSI C63.10:2013, Chapter 6.10.6 "Marker-Delta method",. The method consists of three independent steps:

1. Step: Prior to the measurement the fundamental radiated In-Band field strength was performed. The determined value is used as reference value.

2. Step: Second step consist of finding the relative attenuation between the fundamental emission and the maximum local out-of-band emission (within 2 MHz range around the band edge either on the band-edge directly or some modulation product if the level is greater than that on the band-edge) when measured with lower resolution bandwidth.

3. Step: The delta value recorded in step 2 will be subtracted from value recorded in step 1, thus giving the required field strength at the band-edge. This value must fulfil the requirements for radiated spurious emissions in restricted bands in FCC §15.205 or RSS-Gen, Issue 4, Chapter 8.10, Table 6 with the general limits of FCC §15.209 or RSS-Gen, Issue 4 Chapter 8.9, Table 4.

5.6.5. EUT settings

The EUT was instructed to send with maximum power (if adjustable) according to applicants instructions.

5.6.6. Results

5.6.6.1. Non-restricted bands - limits according FCC 15.247 and RSS-247, Issue 2

Diagramm no.	Channel no.	Restricted band ?	Fundamental Value [dBuV/m]		Peak-Value at Band-Edge [dBuV/m]	Difference [dB]	Limit [dBc]	Margin [dB]	Verdict	Remark:
			Peak-Value	Average-Value						
9.01a	1	no	86,62	77,65	54,1	32,52	20	12,52	PASS	b-Mode, 1Mbit, set1, standing
9.01b	1	no	86,08	77,42	53,93	32,15	20	12,15	PASS	b-Mode, 1Mbit, set1, laying
9.02a	1	no	86,62	77,98	54,65	31,97	20	11,97	PASS	b-Mode, 1MBit, set2, standing
9.02b	1	no	86,89	77,5	53,77	33,12	20	13,12	PASS	b-Mode, 1Mbit, set2, laying
9.03a	1	no	84,4	73,13	62,01	22,39	20	2,39	PASS	g-Mode, 54MBit, set-up1, standing
9.03b	1	no	84,4	73,13	62,01	22,39	20	2,39	PASS	g-Mode, 54MBit, set-up1, laying
9.04a	1	no	87,57	76,88	63,44	24,13	20	4,13	PASS	g-Mode, 54Mbit, set-up2, standing
9.04b	1	no	85,79	76,1	62,71	23,08	20	3,08	PASS	g-Mode, 54Mbit, set-up2, laying
9.05a	1	no	86,11	76,88	65	21,11	20	1,11	PASS	n-Mode, MCS7, set-up1, standing
9.05b	1	no	86,21	77,41	63,88	22,33	20	2,33	PASS	n-Mode, MCS7, set-up1, laying
9.06a	1	no	86,75	77,51	63,7	23,05	20	3,05	PASS	n-Mode, MCS7, set-up2, standing
9.06b	1	no	85,54	76,2	62,4	23,14	20	3,14	PASS	n-Mode, MCS7, set-up2, laying

5.6.6.2. Restricted bands (§15.205 with limits accord. FCC §15.209) and (RSS-Gen, Issue 4, Chapter 8.10)

Diagramm no.	Channel no.	Restricted band ?	Fundamental Value [dBuV/m]		Value at Band-Edge [dBuV/m]		Limits [dBuV/m]		Duty-Cycle Correction for AV-detector	Margin [dB]		Verdict	Remark:
			Peak-Value	Average-Value	Peak -Value	Average -Value	Peak -Value	Average -Value	[dB]	Peak	Average		
9.16a	11	yes	93,39	83,52	63,07	48,64	74	54	1,1815	10,93	4,18	PASS	n-Mode, laying, set-up 2
9.16a	11	yes	97,87	87,7	65,00	51,03	74	54	1,1815	9,00	1,79	PASS	n-Mode, standing, set-up2
9.17b	11	yes	92,85	83,0	62,37	48,56	74	54	1,1815	11,63	4,26	PASS	n-Mode, laying, set-up1
9.17b	11	yes	95,44	85,9	62,40	50,70	74	54	1,1815	11,6	2,12	PASS	n-Mode, laying, set-up1
9.09a	11	yes	95,27	84,75	68,38	50,44	74	54	1,1092	5,62	2,45	PASS	g-Mode,standing,set-up 1
9.09b	11	yes	93,82	83,3	66,65	49,08	74	54	1,1092	7,35	3,81	PASS	g-Mode,laying,set-up1
9.10a	11	yes	95,78	85,2	69,04	52,00	74	54	1,1092	4,96	0,89	PASS	g-Mode, standing, set-up2
9,10b	11	yes	93,72	83,1	66,25	49,58	74	54	1,1092	7,75	3,31	PASS	g-Mode, laying, set-up2
9.07a	11	yes	90,83	88,38	57,2	45,05	74	54	0,03	16,8	8,92	PASS	b-Mode,standing,set-up 1
9.07b	11	yes	86,85	84,65	57,20	45,01	74	54	0,03	16,80	8,96	PASS	b-Mode,laying,set-up1
9.08a	11	yes	91,34	88,8	56,82	45,14	74	54	0,03	17,18	8,83	PASS	b-Mode, standing, set-up2
9.08b	11	yes	89,20	86,9	57,20	45,00	74	54	0,03	16,8	8,97	PASS	b-Mode, laying, set-up2

Remark:
1.) pls. see chapter 5.1 for applicable duty-cycle correction factor for average value
2.) Firmware 0.18.28.5 for compliance determination

5.6.7. Verdict: passed

5.7. General Limit - Conducted emissions on AC-Power lines

5.7.1. Test location and equipment

test location	☒ CETECOM Essen (Chapter 2.2.1)		☐ Please see Chapter 2.2.2		☐ Please see Chapter 2.2.3	
test site	☐ 333 EMI field	☒ 348 EMI cond.				
receiver	☐ 001 ESS	☒ 377 ESCS 30	☐ 489 ESU 40	☐ 620 ESU 26		
LISN	☒ 005 ESH2-Z5	☐ 007 ESH3-Z6	☐ 300 ESH3-Z5 & 50Ω used for AE		☐ no LISN for AE	
signalling	☐ 392 MT8820A	☐ 436 CMU	☐ 547 CMU	☐ 594 CMW		
line voltage	☐ 230 V 50 Hz via public mains		☒ 060 120 V 60 Hz via PAS 5000			

5.7.2. Requirements intentional radiators (TX):

FCC		Part 15, Subpart C, §15.207	
ISED		RSS-Gen Issue5, Chapter 8.8, Table 4	
ANSI		C63.10-2013	
Limit	Frequency [MHz]	QUASI-Peak [dBµV]	AVERAGE [dBµV]
	0.15 – 0.5	66 to 56*	56 to 46*
	0.5 – 5	56	46
	5 – 30	60	50
Remark: * decreases with the logarithm of the frequency			

5.7.3. Test condition and test set-up

Signal link to test system (if used):		☐ air link	☐ cable connection	☒ none
EUT-grounding		☒ none	☐ with power supply	☐ additional connection
Equipment set up		☒ table top (40 cm distance to reference ground plane (wall)		☐ floor standing EUT stands isolated on reference ground plane (floor)
Climatic conditions		Temperature: (22±3°C)		Rel. humidity: (40±20)%
EMI-Receiver or Analyzer settings	Scan data	☐ 9 – 150 kHz, RBW = 200 Hz, Step = 61 Hz ☒ 150 kHz – 30 MHz RBW = 9 kHz, Step = 4 kHz ☐ other:		
	Scan-Mode Pre-measurement Final measurement	6 dB EMI-Receiver Mode Peak detector, Repetitive-Scan, max-hold, sweep-time 50 µs per frequency point Average & Quasi-peak detector at critical frequencies		
General measurement procedures		Please see chapter "Test system set-up for AC power line conducted emissions measurements"		

5.7.4. Measurement results

The results are presented below in summary form only. For more information please see the diagrams

EUT	set-up no.:		set-up 3		
Diagram No.	EUT operating mode no. or commend	Used Detector	Power line	Additional (scan-) information or remarks	Result
1.01	EUT operating mode 1	☒ Peak (pre-scan) ☒ AV (final) ☐ QP (final)	L1/ N	b-Mode, 1Mbit, Channel 1	Passed

5.8. General Limit - Radiated field strength emissions below 30 MHz

5.8.1. Test location and equipment

test location	☒ CETECOM Essen (Chapter. 2.2.1)		☐ Please see Chapter. 2.2.2		☐ Please see Chapter. 2.2.3	
test site	☒ 441 EMI SAR	☐ 487 SAR NSA	☐ 347 Radio.lab.		☐	☐
receiver	☐ 377 ESCS30	☒ 001 ESS	☐	☐	☐	☐
spectr. analys.	☐ 584 FSU	☐ 120 FSEM	☐ 264 FSEK	☐	☐	☐
antenna	☐ 574 BTA-L	☐ 133 EMCO3115	☐ 302 BBHA9170	☐ 289 CBL 6141	☐ 030 HFH-Z2	☒ 021 EMCO6502
signalling	☐ 757 CMW500	☐ 371 CBT32	☐ 547 CMU	☐ 594 CMW500		
otherwise	☐ 400 FTC40x15E	☐ 401 FTC40x15E	☐ 110 USB LWL	☐ 482 Filter Matrix	☐ 378 RadiSense	
DC power	☐ 456 EA 3013A	☐ 457 EA 3013A	☐ 459 EA 2032-50	☐ 268 EA- 3050	☐ 494 AG6632A	☐ 498 NGPE 40
line voltage	☐ 230 V 50 Hz via public mains		☐ 060 120 V 60 Hz via PAS 5000			

5.8.2. Requirements

FCC	Part 15, Subpart C, §15.205 & §15.209			
ISED	☐ RSS-Gen: Issue 4: §8.9 Table 5 ☒ RSS-Gen: Issue 5: §8.9 Table 6			
ANSI	C63.10-2013			
Frequency [MHz]	Field strength limit [µV/m]	[dBµV/m]	Distance [m]	Remarks
0.009 – 0.490	2400/f (kHz)	67.6 – 20Log(f) (kHz)	300	Correction factor used due to measurement distance of 3 m
0.490 – 1.705	24000/f (kHz)	87.6 – 20Log(f) (kHz)	30	Correction factor used due to measurement distance of 3 m
1.705 – 30	30	29.5	30	Correction factor used due to measurement distance of 3 m

5.8.3. Test condition and test set-up

Signal link to test system (if used):		☐ air link	☐ cable connection	☒ none
EUT-grounding		☒ none	☐ with power supply	☐ additional connection
Equipment set up		☒ table top		☐ floor standing
Climatic conditions		Temperature: (22±3°C)		Rel. humidity: (40±20)%
EMI-Receiver or Analyzer Settings	Scan data	☒ 9 – 150 kHz RBW/VBW = 200 Hz Scan step = 80 Hz ☒ 150 kHz – 30 MHz RBW/VBW = 9 kHz Scan step = 4 kHz ☐ other:		
	Scan-Mode Detector Mode: Sweep-Time	☒ 6 dB EMI-Receiver Mode ☐ 3dB Spectrum analyser Mode Peak (pre-measurement) and Quasi-PK/Average (final if applicable) Repetitive-Scan, max-hold Coupled – calibrated display if continuous signal otherwise adapted to EUT's individual transmission duty-cycle		
General measurement procedures		Please see chapter "Test system set-up radiated magnetic field measurements below 30 MHz"		

5.8.4. Measurement Results

The results are presented below in summary form only. For more information please consult the diagrams included in annex 1.

Diagram No.	Carrier Channel		Frequency range	Set-up no.	OP-mode no.	Remark	Used detector			Result
	Range	No.					PK	AV	QP	
2.01a	Low	1	9 kHz-30 MHz	1	1	b-Mode, 1Mbit EUT laying position	☒	☐	☐	passed
2.01b	Low	1	9 kHz-30 MHz	1	1	b-Mode, 1Mbit EUT standing position	☒	☐	☐	passed
2.02a	Middle	6	9 kHz-30 MHz	2	2	g-Mode, 54Mbit EUT laying position	☒	☐	☐	passed
2.02b	Middle	6	9 kHz-30 MHz	2	2	g-Mode, 54Mbit EUT standing position	☒	☐	☐	passed
2.03a	High	11	9 kHz-30 MHz	1	3	n-Mode, MCS7 EUT laying position	☒	☐	☐	passed
2.03b	High	11	9 kHz-30 MHz	1	3	n-Mode, MCS7 EUT standing position	☒	☐	☐	passed

5.8.5. Correction factors due to reduced meas. distance (f< 30 MHz)

The used correction factors when the measurement distance is reduced compared to regulatory measurement distance, are calculated according Extrapolation formulas valid for EUT's with maximum dimension of 0.625xLambda. Formula 2+3+4 as presented in ANSI C63.10, Chapter 6.4.4 are used for the calculations of proper extrapolation factors.

Frequency -Range	f [kHz/MHz]	Lambda [m]	Far-Field Point [m]	Distance Limit accord. 15.209 [m]	1st Condition (dmeas< $D_{near-field}$)	2'te Condition (Limit distance bigger $d_{near-field}$)	Distance Correction accord. Formula
kHz	9,00E+03	33333,33	5305,17	300	fullfilled	not fullfilled	-80,00
	1,00E+04	30000,00	4774,65		fullfilled	not fullfilled	-80,00
	2,00E+04	15000,00	2387,33		fullfilled	not fullfilled	-80,00
	3,00E+04	10000,00	1591,55		fullfilled	not fullfilled	-80,00
	4,00E+04	7500,00	1193,66		fullfilled	not fullfilled	-80,00
	5,00E+04	6000,00	954,93		fullfilled	not fullfilled	-80,00
	6,00E+04	5000,00	795,78		fullfilled	not fullfilled	-80,00
	7,00E+04	4285,71	682,09		fullfilled	not fullfilled	-80,00
	8,00E+04	3750,00	596,83		fullfilled	not fullfilled	-80,00
	9,00E+04	3333,33	530,52		fullfilled	not fullfilled	-80,00
	1,00E+05	3000,00	477,47		fullfilled	not fullfilled	-80,00
	1,25E+05	2400,00	381,97		fullfilled	not fullfilled	-80,00
	2,00E+05	1500,00	238,73		fullfilled	fullfilled	-78,02
	3,00E+05	1000,00	159,16		fullfilled	fullfilled	-74,49
	4,00E+05	750,00	119,37		fullfilled	fullfilled	-72,00
	4,90E+05	612,24	97,44		fullfilled	fullfilled	-70,23
	5,00E+05	600,00	95,49	30	fullfilled	not fullfilled	-40,00
	6,00E+05	500,00	79,58		fullfilled	not fullfilled	-40,00
	7,00E+05	428,57	68,21		fullfilled	not fullfilled	-40,00
	8,00E+05	375,00	59,68		fullfilled	not fullfilled	-40,00
	9,00E+05	333,33	53,05		fullfilled	not fullfilled	-40,00
MHz	1,00	300,00	47,75		fullfilled	not fullfilled	-40,00
	1,59	188,50	30,00		fullfilled	not fullfilled	-40,00
	2,00	150,00	23,87		fullfilled	fullfilled	-38,02
	3,00	100,00	15,92		fullfilled	fullfilled	-34,49
	4,00	75,00	11,94		fullfilled	fullfilled	-32,00
	5,00	60,00	9,55		fullfilled	fullfilled	-30,06
	6,00	50,00	7,96		fullfilled	fullfilled	-28,47
	7,00	42,86	6,82		fullfilled	fullfilled	-27,13
	8,00	37,50	5,97		fullfilled	fullfilled	-25,97
	9,00	33,33	5,31		fullfilled	fullfilled	-24,95
	10,00	30,00	4,77		fullfilled	fullfilled	-24,04
	10,60	28,30	4,50		fullfilled	fullfilled	-23,53
	11,00	27,27	4,34		fullfilled	fullfilled	-23,21
	12,00	25,00	3,98		fullfilled	fullfilled	-22,45
	13,56	22,12	3,52		fullfilled	fullfilled	-21,39
	15,00	20,00	3,18		fullfilled	fullfilled	-20,51
	15,92	18,85	3,00		fullfilled	fullfilled	-20,00
	17,00	17,65	2,81		not fullfilled	fullfilled	-20,00
	18,00	16,67	2,65		not fullfilled	fullfilled	-20,00
	20,00	15,00	2,39		not fullfilled	fullfilled	-20,00
	21,00	14,29	2,27		not fullfilled	fullfilled	-20,00
	23,00	13,04	2,08		not fullfilled	fullfilled	-20,00
	25,00	12,00	1,91		not fullfilled	fullfilled	-20,00
	27,00	11,11	1,77		not fullfilled	fullfilled	-20,00
	29,00	10,34	1,65		not fullfilled	fullfilled	-20,00
	30,00	10,00	1,59		not fullfilled	fullfilled	-20,00

5.9. General Limit - Radiated field strength emissions, 30 MHz - 1 GHz

5.9.1. Test location and equipment

test location	☒ CETECOM Essen (Chapter. 2.2.1)		☐ Please see Chapter. 2.2.2		☐ Please see Chapter. 2.2.3	
test site	☒ 441 EMI SAR	☒ 487 SAR NSA				
receiver	☐ 377 ESCS30	☒ 001 ESS	☐ 489 ESU 40	☐ 620 ESU 26		
spectr. analys.	☐ 584 FSU	☐ 120 FSEM	☐ 264 FSEK			
antenna	☒ 574 BTA-L	☐ 133 EMCO3115	☐ 302 BBHA9170	☐ 289 CBL 6141	☐ 030 HFH-Z2	☐ 477 GPS
signalling	☐ 392 MT8820A	☐ 371 CBT32	☐ 547 CMU	☐ 594 CMW		
otherwise	☐ 400 FTC40x15E	☐ 401 FTC40x15E	☐ 110 USB LWL	☒ 482 Filter Matrix		
DC power	☐ 456 EA 3013A	☐ 457 EA 3013A	☐ 459 EA 2032-50	☐ 268 EA- 3050	☐ 494 AG6632A	☐ 498 NGPE
line voltage	☐ 230 V 50 Hz via public mains		☒ 060 120 V 60 Hz via PAS 5000			

5.9.2. Requirements/Limits

FCC	☐ Part 15 Subpart B, §15.109, class B ☒ Part 15 Subpart C, §15.209 @ frequencies defined in §15.205		
ISED (IC)	☒ RSS-Gen., Issue 4, Chapter 8.9 ☐ RSS-Gen., Issue 5, Chapter 7.1.2, Table 2 (receiver) ☐ ICES-003, Issue 6, Table 5 (Class B) ☒ RSS-247, Issue 2, Chapter 5.5 ☒ RSS-247, Issue 2, Chapter 6.2		
ANSI	☐ C63.4-2014 ☒ C63.10-2013		
Limit	Frequency [MHz]	Radiated emissions limits, 3 meters	
		QUASI Peak [µV/m]	QUASI-Peak [dBµV/m]
	30 - 88	100	40.0
	88 - 216	150	43.5
	216 - 960	200	46.0
	above 960	500	54.0

5.9.3. Restricted bands of operation (FCC §15.205/ RSS-Gen, Issue 4, Chapter 8.9, Table 6)

MHz	MHz	MHz	GHz
0.090-0.110	16.42-16.423	399.9-410	4.5-5.15
0.495-0.505	16.69475-16.69525	608-614	5.35-5.46
2.1735-2.1905	16.80425-16.80475	960-1240	7.25-7.75
4.125-4.128	25.5-25.67	1300-1427	8.025-8.5
4.20725-4.20775	37.5-38.25	1645.5-1646.5	9.3-9.5
6.215-6.218	73-74.6	1660-1710	10.6-12.7
6.26775-6.26825	74.8-75.2	1718.8-1722.2	13.25-13.4
6.31175-6.31225	108-121.94	2200-2300	14.47-14.5
8.291-8.294	123-138	2310-2390	15.35-16.2
8.362-8.366	149.9-150.05	2483.5-2500	17.7-21.4
8.37625-8.38675	156.52475-156.52525	2690-2900	22.01-23.12
8.41425-8.41475	156.7-156.9	3260-3267	23.6-24.0
12.29-12.293	162.0125-167.17	3332-3339	31.2-31.8
12.51975-12.52025	167.72-173.2	3345.8-3358	36.43-36.5
12.57675-12.57725	240-285	3600-4400	--
13.36-13.41	322-335.4	--	--
Remark: only spurious emissions are allowed within these frequency bands not exceeding the limits per §15.209			

5.9.4. Test condition and measurement test set-up

Signal link to test system (if used):		☐ air link	☐ cable connection	☒ none
EUT-grounding		☒ none	☐ with power supply	☐ additional connection
Equipment set up		☒ table top 0.8m height		☐ floor standing
Climatic conditions		Temperature: (22±3°C)		Rel. humidity: (40±20)%
EMI-Receiver (Analyzer) Settings	Scan frequency range:	☒ 30 – 1000 MHz ☐ other:		
	Scan-Mode	☒ 6 dB EMI-Receiver Mode ☐ 3 dB spectrum analyser mode		
	Detector	Peak / Quasi-peak		
	RBW/VBW	100 kHz/300 kHz		
	Mode:	Repetitive-Scan, max-hold		
	Scan step	80 kHz		
	Sweep-Time	Coupled – calibrated display if continuous tx-signal otherwise adapted to EUT's individual duty-cycle		
General measurement procedures		Please see chapter "Test system set-up for electric field measurement in the range 30 MHz to 1 GHz"		

5.9.5. MEASUREMENT RESULTS

The results are presented below in summary form only. For more information please consult the diagrams included in annex 1.

Table of measurement results:

Dia-gram no.	Carrier Channel		Frequency range	Set-up no.	OP-mode no.	Remark	Used detector			Result
	Range	No.					PK	AV	QP	
3.01a	Low	1	30 MHz – 1 GHz	1	1	EUT laying	☒	☐	☐	passed
3.01b	Low	1	30 MHz – 1 GHz	1	1	EUT standing	☒	☐	☐	passed
3.02a	Middle	6	30 MHz – 1 GHz	2	2	EUT laying	☒	☐	☐	passed
3.02b	Middle	6	30 MHz – 1 GHz	2	2	EUT standing	☒	☐	☐	passed
3.03a	High	11	30 MHz – 1 GHz	1	3	EUT laying	☒	☐	☐	passed
3.03b	High	11	30 MHz – 1 GHz	1	3	EUT standing	☒	☐	☐	passed

Remark:

5.10. General Limit – Radiated field strength emissions, above 1 GHz

5.10.1. Test location and equipment FAR

test site	☐441 EMI SAR	☐348 EMI cond.	☒443 EMI FAR	☐347 Radio.lab.	☐337 OATS	☐
spectr. analys.	☐584 FSU	☐120 FSEM	☐264 FSEK	☒489 ESU 40	☐	☐
antenna meas	☐574 BTA-L	☐289 CBL 6141	☐608 HL 562	☒549 HL025	☒302 BBHA9170	☐477 GPS
antenna meas	☐123 HUF-Z2	☐132 HUF-Z3	☐030 HFH-Z2	☒376 BBHA9120E		☐
antenna subst	☐071 HUF-Z2	☐020 EMCO3115	☐063 LP 3146	☐303 BBHA9170	☐	☐
multimeter	☐341 Fluke 112	☐	☐	☐	☐	☐
signalling	☐392 MT8820A	☐371 CBT32	☐547 CMU	☐594 CMW		
DC power	☐086 LNG50-10	☐087 EA3013	☐354 NGPE 40	☐349 car battery	☐350 Car battery	☐
line voltage	☐ 230 V 50 Hz via public mains		☒ 060 120 V 60 Hz via PAS 5000			

5.10.2. Requirements/Limits

FCC	☐ Part 15 Subpart B, §15.109 class B ☒ Part 15 Subpart C, §15.209 for frequencies defined in §15.205 ☐ Part 15 Subpart C, §15.407(b)(1)(2)(3)(4)			
ISED	☒ RSS-Gen., Issue 4 (transmitter licence excempt) ☐ RSS-Gen., Issue 5, Chapter 7.3, Table 3 (receiver) ☐ ICES-003, Issue 6, Chapter 6.2.2, Table 7 (class B) ☒ RSS-247, Issue 2, Chapter 5.5 ☐ RSS-247, Issue 2, Chapter 6.2			
ANSI	☐ C63.4-2014 ☒ C63.10-2013			
Frequency [MHz]	Limits			
	AV [µV/m]	AV [dBµV/m]	Peak [µV/m]	Peak [dBµV/m] or [dBm/MHz]
above 1 GHz for frequencies as defined in §15.205 or RSS-Gen., Issue 9, §8.9 - Table 5	500	54.0	5000	74.0 dBµV/m

5.10.3. Test condition and measurement test set-up

Signal link to test system (if used):		☐ air link	☐ cable connection	☒ none
EUT-grounding		☒ none	☐ with power supply	☐ additional connection
Equipment set up		☒ table top 1.5m height		☐ floor standing
Climatic conditions		Temperature: (22±3°C)		Rel. humidity: (40±20)%
Spectrum-Analyzer settings	Scan frequency range:	☒ 1 – 18 GHz ☐ 18 – 25 GHz ☐ 18 – 40 GHz ☐ other:		
	Scan-Mode	☒ 6 dB EMI-Receiver Mode ☐ 3 dB Spectrum analyser Mode		
	Detector	Peak and Average		
	RBW/VBW	1 MHz / 3 MHz		
	Mode:	Repetitive-Scan, max-hold		
	Scan step	400 kHz		
	Sweep-Time	Coupled – calibrated display if CW signal otherwise adapted to EUT's individual duty-cycle		
General measurement procedures		Please see chapter "Test system set-up for radiated electric field measurements above 1 GHz"		

5.10.4. Measurement Results

The results are presented below in summary form only. For more information please consult the diagrams included in annex 1.

Dia-gram no.	Carrier Channel		Frequency range	Set-up no.	OP-mode no.	Remark	Used detector			Result
	Range	No.					PK	AV	QP	
4.01a 4.01b	Low	1	1-18 GHz	1	1	a - EUT laying position b – EUT standing position	☒	☒	☐	passed
8.101			18-26.5 GHz	1	1	EUT laying/standing	☒	☒	☐	passed
4.02a 4.02b	Middle	6	1-18 GHz	2	2	a - EUT laying position b – EUT standing position	☒	☒	☐	passed
8.102			18-26.5 GHz	2	2	EUT laying/standing	☒	☒	☐	passed
4.03a 4.03b	High	11	1-18 GHz	2	3	a - EUT laying position b – EUT standing position	☒	☒	☐	passed
8.103			18-26.5 GHz	2	3	EUT laying/standing	☒	☒	☐	passed

5.11. Measurement uncertainties

The reported uncertainties are calculated based on the standard uncertainty multiplied with the appropriate coverage factor **k**, such that a confidence level of approximately 95% is achieved.
For uncertainty determination, each component used in the concrete measurement set-up was taken in account and it's contribution to the overall uncertainty according it's statistical distribution calculated.

Following table shows expectable uncertainties for each measurement type performed.

RF-Measurement	Reference	Frequency range	Calculated uncertainty based on a confidence level of 95%						Remarks
Conducted emissions (U_{CISPR})	CISPR 16-2-1	9 kHz - 150 kHz 150 kHz - 30 MHz	4.0 dB 3.6 dB						-
Radiated emissions Enclosure	CISPR 16-2-3	30 MHz - 1 GHz 1 GHz - 18 GHz	4.2 dB 5.1 dB						E-Field
Disturbance power	CISPR 16-2-2	30 MHz - 300 MHz	-						-
Power Output radiated	-	30 MHz - 4 GHz	3.17 dB						Substitution method
Power Output conducted	-	Set-up No.	Cel-C1	Cel-C2	BT1	W1	W2	--	
		9 kHz - 12.75 GHz	N/A	0.60	0.7	0.25	N/A	--	-
		12.75 - 26.5GHz	N/A	0.82	--	N/A	N/A	--	
Conducted emissions on RF-port	-	9 kHz - 2.8 GHz	0.70	N/A	0.70	N/A	0.69	--	N/A - not applicable
		2.8 GHz - 12.75GHz	1.48	N/A	1.51	N/A	1.43	--	
		12.75 GHz - 18GHz	1.81	N/A	1.83	N/A	1.77	--	
		18 GHz - 26.5GHz	1.83	N/A	1.85	N/A	1.79	--	
Power density	-	1 – 2.8GHz	1.40 dB						--
Occupied bandwidth	-	9 kHz - 4 GHz	0.1272 ppm (Delta Marker)						Frequency error
			1.0 dB						Power
Emission bandwidth	-	9 kHz - 4 GHz	0.1272 ppm (Delta Marker)						Frequency error
	-		See above: 0.70 dB						Power
Frequency stability	-	9 kHz - 20 GHz	0.0636 ppm						-
Radiated emissions Enclosure	-	150 kHz - 30 MHz 30 MHz - 1 GHz 1 GHz - 20 GHz	5.0 dB 4.2 dB 3.17 dB						Magnetic field E-field Substitution

Table: measurement uncertainties, valid for conducted/radiated measurements

6. Abbreviations used in this report

The abbreviations	
ANSI	American National Standards Institute
AV , AVG, CAV	Average detector
EIRP	Equivalent isotropically radiated power, determined within a separate measurement
EGPRS	Enhanced General Packet Radio Service
EUT	Equipment Under Test
FCC	Federal Communications Commission, USA
IC	Industry Canada
n.a.	not applicable
Op-Mode	Operating mode of the equipment
PK	Peak
RBW	resolution bandwidth
RF	Radio frequency
RSS	Radio Standards Specification, Dokuments from Industry Canada
Rx	Receiver
TCH	Traffic channel
Tx	Transmitter
QP	Quasi peak detector
VBW	Video bandwidth
ERP	Effective radiated power

7. Accreditation details of CETECOM's laboratories and test sites

Ref.-No.	Accreditation Certificate	Valid for laboratory area or test site	Accreditation Body
-	D-PL-12047-01-01	All laboratories and test sites of CETECOM GmbH, Essen	DAkkS, Deutsche Akkreditierungsstelle GmbH
337 487 558 348 348	(MRA US-EU 0003)	Radiated Measurements 30 MHz to 1 GHz, 3 m / 10 m (OATS) Radiated Measurements 30 MHz to 1 GHz, 3 m (SAR) Radiated Measurements above 1 GHz, 3 m (FAR) Mains Ports Conducted Interference Measurements Telecommunication Ports Conducted Interference Measurem.	FCC, Federal Communications Commission Laboratory Division, USA
337 487 550 558	-- 3462D-2 3462D-2 3462D-3	Radiated Measurements 30 MHz to 1 GHz, 3 m / 10 m (OATS) Radiated Measurements 30 MHz to 1 GHz, 3 m (SAR) Radiated Measurements 1 GHz to 6 GHz, 3 m (SAR) Radiated Measurements above 1 GHz, 3 m (FAR)	ISED, Industry Canada Certification and Engineering Bureau
487 550 348 348	R- 4452 G- 20013 C- 20009 T- 20006	Radiated Measurements 30 MHz to 1 GHz, 3 m (SAR) Radiated Measurements 1 GHz to 6 GHz, 3 m (SAR) Mains Ports Conducted Interference Measurements Telecommunication Ports Conducted Interference Measurem.	VCCI, Voluntary Control Council for Interference by Information Technology Equipment, Japan
OATS = Open Area Test Site, SAR = Semi Anechoic Room, FAR = Fully Anechoic Room			

8. Instruments and Ancillary

8.1. Used equipment "CTC"

The "Ref.-No" in the left column of the following tables allows the clear identification of the laboratory equipment.

8.1.1. Test software and firmware of equipment

Ref.-No.	Equipment	Type	Serial-No.	Version of Firmware or Software during the test
001	EMI Test Receiver	ESS	825132/017	Firm.= 1.21 , OTP=2.0, GRA=2.0
012	Signal Generator (EMS-cond.)	SMY 01	839069/027	Firm.= V 2.02
013	Power Meter (EMS cond.)	NRVD	839111/003	Firm.= V 1.51
017	Digital Radiocommunication Tester	CMD 60 M	844365/014	Firmware = V 3.52 .22.01.99, DECT = D2.87 13.01.99
119	RT Harmonics Analyzer dig. Flickermeter	B10	G60547	Firm.= V 3.1DHG
261	Thermal Power Sensor	NRV-Z55	825083/0008	EPROM-Datum 02.12.04, SE EE 1 B
262	Power Meter	NRV-S	825770/0010	Firm.= 2.6
263	Signal Generator	SMP 04	826190/0007	Firm.=3.21
295	Racal Digital Radio Test Set	6103	1572	UNIT Firmware= 4.04, SW-Main=4.04, SW-BBP=1.04, SW-DSP=1.02, Hardboot=1.02, Softboot=2.02
298	Univ. Radio Communication Tester	CMU 200	832221/091	R&S Test Firmware =3.53 /3.54 (current Testsoftw. f. all band used
323	Digital Radiocommunication Tester	CMD 55	825878/0034	Firm.= 3.52 .22.01.99
335	CTC-EMS-Conducted	System EMS Conducted	-	EMC 32 V 8.52
340	Digital Radiocommunication Tester	CMD 55	849709/037	Firm.= 3.52 .22.01.99
366	Ultra Compact Simulator	UCS 500 M4	V0531100594	Firm. UCS 500=001925/3.06a02, rc=ISMIEC 4.10
371	Bluetooth Tester	CBT32	100153	CBT V5,30+ SW-Option K55, K57
377	EMI Test Receiver	ESCS 30	100160	Firm.= 2.30, OTP= 02.01, GRA= 02.36
378	Broadband RF Field Monitor	RadiSense III	03D00013SNO-08	Firm.= V.03D13
389	Digital Multimeter	Keithley 2000	0583926	Firm. = A13 (Mainboard) A02 (Display)
392	Radio Communication Tester	MT8820A	6K00000788	Firm.= 4.50 #005, IPL=4.01#001,OS=4.02#001, GSM=4.41#013, W-CDMA= 4.54#004, scenario= 4.52#002
436	Univ. Radio Communication Tester	CMU 200	103083	R&S Test Firmware Base=5.14, Mess-Software= GSM:5.14 WCDMA:5.14 (current Testsoftw. F. all band
441	CTC-SAR-EMI Cable Loss	System EMI field (SAR)	-	EMC 32 Version 8.52
442	CTC-SAR-EMS	System EMS field (SAR)	-	EMC 32 Version 8.40
443	CTC-FAR-EMI-RSE	System CTC-FAR-EMI-RSE	-	Spuri 7.2.5 or EMC 32 Ver. 9.15.00
444	CTC-FAR-EMS field	System-EMS-Field (FAR)	-	EMC 32 Version 9.15.00
460	Univ. Radio Communication Tester	CMU 200	108901	R&S Test Firmware Base=5.14, GSM=5.14 WCDMA=5.14 (current Testsoftw.,f. all band to be used,
489	EMI Test Receiver	ESU40	1000-30	Firmware=4.43 SP3, Bios=V5.1-16-3, Spec. =01.00
491	ESD Simulator dito	ESD dito	dito307022	V 2.30
524	Voltage Drop Simulator	VDS 200	0196-16	Software Nr: 000037 Version V4.20a01
526	Burst Generator	EFT 200 A	0496-06	Software Nr. 000034 Version V2.32
527	Micro Pulse Generator	MPG 200 B	0496-05	Software-Nr. 000030 Version V2.43
528	Load Dump Simulator	LD 200B	0496-06	Software-Nr. 000031 Version V2.35a01
546	Univ. Radio Communication Tester	CMU 200	106436	R&S Test Firmware Base=5.14, GSM=5.14 WCDMA=5.14 (current Testsoftw.,f. all band to be used
547	Univ. Radio Communication Tester	CMU 200	835390/014	R&S Test Firmware Base=V5.1403 (current Testsoftw., f. all band used, GSM = 5.14 WCDMA: = 5.14
584	Spectrum Analyzer	FSU 8	100248	2.82_SP3
597	Univ. Radio Communication Tester	CMU 200	100347	R&S Test Firmware Base=5.01, GSM=5.02 WCDMA= not installed, Mainboard= µP1=V.850
607	Signal Generator	SMR 20	832033/011	V1.25
620	EMI Test Receiver	ESU 26	100362	4.43_SP3
642	Wideband Radio Communication Tester	CMW 500	126089	Setup V03.26, Test programm component V03.02.20
670	Univ. Radio Communication Tester	CMU 200	106833	µP1 =V8.50, Firmware = V.20
689	Vector Signal Generator	SMU200	100970	02.20.360.142
692	Bluetooth Tester	CBT 32	100236	CBT V 5.40, FW: V.2.41 (FPGA Digital, V. 3.09 FPGA RF)
699	Audio Analyzer	UPL16	833494/005	3.06

8.1.2. Single instruments and test systems

Ref.-No.	Equipment	Type	Serial-No.	Manufacturer	Interval of calibration	Remark	Cal due
001	EMI Test Receiver	ESS	825132/017	Rohde & Schwarz	12 M	-	16.05.2019
005	AC - LISN (50 Ohm/50µH, test site 1)	ESH2-Z5	861741/005	Rohde & Schwarz	12 M	-	16.05.2019
007	Single-Line V-Network (50 Ohm/5µH)	ESH3-Z6	892563/002	Rohde & Schwarz	12 M	-	16.05.2019
009	Power Meter (EMS-radiated)	NRV	863056/017	Rohde & Schwarz	24 M	-	15.05.2019
011	Insertion Unit (EMS-radiated)	URV5-Z2	864169/004	Rohde & Schwarz	24 M	-	
012	Signal Generator (EMS-cond.)	SMY 01	839069/027	Rohde & Schwarz	24 M	-	15.05.2019
013	Power Meter (EMS cond.)	NRVD	839111/003	Rohde & Schwarz	24 M	-	15.05.2019
014	Insertion Unit (EMS cond.)	URV5-Z2	838519/029	Rohde & Schwarz	24 M	-	15.05.2019
015	Insertion Unit (EMS cond.)	URV5-Z4	838570/024	Rohde & Schwarz	24 M	-	15.05.2019
016	Line Impedance Simulating Network	Op. 24-D	B6366	Spitzenberger+Spies	36 M	-	30.05.2019
017	Digital Radiocommunication Tester	CMD 60 M	844365/014	Rohde & Schwarz	pre-m	3	
021	Loop Antenna (H-Field)	6502	9206-2770	EMCO	36 M	-	30.05.2021
031	Absorbing Clamp	MDS-21	863325/015	Rohde & Schwarz	36 M	-	30.06.2021
033	RF-current probe (100kHz-30MHz)	ESH2-Z1	879581/18	Rohde & Schwarz	24 M	-	15.05.2019
049	Current Clamp (injection)	F-120-2	48	FCC	24 M	-	30.05.2020
050	3-ph Coupling Decoupling Netw. (Burst)	CDN 300	176	Schaffner	36 M	-	30.05.2021
051	VHF-Current Probe 20-300 MHz	ESV-Z1	872421	Rohde & Schwarz	36 M	-	30.05.2021
052	Notch Filter DECT	WRCB 1887,82/1889,55SS	12	Wainwright Industries	pre-m	2	
057	relay-switch-unit (EMS system)	RSU	494440/002	Rohde & Schwarz	pre-m	1a	
058	capacitive clamp (Burst)	IP 4	99	Haefely	36 M	-	30.05.2021
060	power amplifier (DC-2kHz)	PAS 5000	B6363	Spitzenberger+Spies	-	3	
065	attenuator, (6 dB) 50 Ohm, 250W	AT 50-6-250	521057	BNOS Electronics	12 M	1b	30.09.2015
067	coupling decoupling-network	CDN 801-M2/M3	272	Lüthi	36 M	-	15.05.2020
068	coupling decoupling-network	CDN 801-M5	95226	Lüthi	36 M	-	17.05.2020
069	EM - clamp	EM101	9535159	Lüthi	36 M	-	30.05.2019
072	coupling decoupling-network	CDN 801-M2/M3	276	Lüthi	36 M	-	17.05.2020
083	AC - power supply, 0-10 A	EAC/MT 27010	910502096	EURO TEST	pre-m	2	
084	AC - power supply, 0-5 A	ELABO-8-34214	-	ELABO	pre-m	2	
085	AC - power supply, 0-10 A	R250	-	Schunterm.&Benningh.	pre-m	2	
086	DC - power supply, 0 -10 A	LNG 50-10	-	Heinzinger Electronic	pre-m	2	
087	DC - power supply, 0 -5 A	EA-3013 S	-	Elektro Automatik	pre-m	2	
091	USB-LWL-Converter	OLS-1	007/2006	Ing. Büro Scheiba	-	4	
094	artificial head (No.1)	4905	1566990	Brüel & Kjaer	pre-m	2	
099	passive voltage probe	ESH2-Z3	299.7810.52	Rohde & Schwarz	36 M	-	30.05.2021
100	passive voltage probe	Probe TK 9416	without	Schwarzbeck	36 M	-	30.05.2021
110	USB-LWL-Converter	OLS-1	-	Ing. Büro Scheiba	-	4	
119	RT Harmonics Analyzer dig. Flickermeter	B10	G60547	BOCONSULT	36 M	-	30.05.2019
131	RF-Current Probe	F-52	19	FCC	36 M	-	17.05.2020
133	horn antenna 18 GHz (Meas 1)	3115	9012-3629	EMCO	36 M	1c	10.03.2020
134	horn antenna 18 GHz (Subst 2)	3115	9005-3414	EMCO	36 M	-	10.03.2020
248	attenuator	SMA 6dB 2W	-	Radiall	pre-m	2	
249	attenuator	SMA 10dB 10W	-	Radiall	pre-m	2	
252	attenuator	N 6dB 12W	-	Radiall	pre-m	2	
256	attenuator	SMA 3dB 2W	-	Radiall	pre-m	2	
257	hybrid	4031C	04491	Narda	pre-m	2	
260	hybrid coupler	4032C	11342	Narda	pre-m	2	
261	Thermal Power Sensor	NRV-Z55	825083/0008	Rohde & Schwarz	24 M	-	30.05.2020
262	Power Meter	NRV-S	825770/0010	Rohde & Schwarz	24 M	-	30.05.2019
263	Signal Generator	SMP 04	826190/0007	Rohde & Schwarz	36 M	-	30.05.2019
265	peak power sensor	NRV-Z33, Model 04	840414/009	Rohde & Schwarz	24 M	-	30.05.2020
266	Peak Power Sensor	NRV-Z31, Model 04	843383/016	Rohde & Schwarz	24 M	-	30.05.2020
267	notch filter GSM 850	WRCA 800/960-6EEK	9	Wainwright GmbH	pre-m	2	
268	AC/DC power supply	EA 3050-A	9823636	Elektro Automatik	pre-m	-	
270	termination	1418 N	BB6935	Weinschel	pre-m	2	
271	termination	1418 N	BE6384	Weinschel	pre-m	2	
272	attenuator (20 dB) 50 W	Model 47	BF6239	Weinschel	pre-m	2	
273	attenuator (10 dB) 100 W	Model 48	BF9229	Weinschel	pre-m	2	
274	attenuator (10 dB) 50 W	Model 47 (10 dB) 50 W	BG0321	Weinschel	pre-m	2	
275	DC-Block	Model 7003 (N)	C5129	Weinschel	pre-m	2	
276	DC-Block	Model 7006 (SMA)	C7061	Weinschel	pre-m	2	
279	power divider	1515 (SMA)	LH855	Weinschel	pre-m	2	
284	coupling decoupling network	CDN 801-M1	1661	Lüthi	36 M	-	17.05.2020
285	coupling decoupling network	CDN 801-S1	1642	Lüthi	36 M	-	17.05.2020
295	Racal Digital Radio Test Set	6103	1572	Racal	pre-m	3	
296	audio measurement amplifier	2636C (Reserve)	R=316568/004 B=1537541	Brüel & Kjaer	pre-m	2	
298	Univ. Radio Communication Tester	CMU 200	832221/091	Rohde & Schwarz	pre-m	3	
299	audio microphone	134	-	Brüel & Kjaer	pre-m	2	

Ref.-No.	Equipment	Type	Serial-No.	Manufacturer	Interval of calibration	Remark	Cal due
300	AC LISN (50 Ohm/50µH, 1-phase)	ESH3-Z5	892 239/020	Rohde & Schwarz	12 M	-	17.05.2019
301	attenuator (20 dB) 50W, 18GHz	47-20-33	AW0272	Lucas Weinschel	pre-m	2	
302	horn antenna 40 GHz (Meas 1)	BBHA9170	155	Schwarzbeck	36 M	-	14.03.2020
303	horn antenna 40 GHz (Subst 1)	BBHA9170	156	Schwarzbeck	36 M	-	20.03.2020
304	fix dipole antenna 1,6 GHz	EMCO 3125-307	9907-1001	ETS	pre-m	-	
305	fix dipole antenna 1,8-2,0 GHz	EMCO 3125-306	9907-1001	ETS	pre-m	-	
306	fix dipole antenna 2,45 GHz	EMCO 3125-308	9907-1001	ETS	pre-m	-	
307	fix dipole antenna 3 GHz	EMCO 3125-309	9907-1001	ETS	pre-m	-	
317	1000 Hz calibrator 94 dB SPL	4230 94dB	1542286	Brüel & Kjaer	12 M	-	
323	Digital Radiocommunication Tester	CMD 55	825878/0034	Rohde & Schwarz	pre-m	3	
337	System CTC OATS NSA	System EMI OATS NSA	-	HD GmbH	24 M	5	12.04.2019
340	Digital Radiocommunication Tester	CMD 55	849709/037	Rohde & Schwarz	pre-m	3	
341	Digital Multimeter	Fluke 112	81650455	Fluke	24 M	-	30.05.2020
342	Digital Multimeter	Voltcraft M-4660A	IB 255466	Voltcraft	24 M	-	17.05.2019
344	adaptor 150/50 Ohm	150/50	-	Krohne	36 M	-	17.05.2020
345	adaptor 150/50 Ohm	150/50	-	Krohne	36 M	-	17.05.2020
347	laboratory site	radio lab.	-	-	-	5	
348	laboratory site	EMI conducted	-	-	-	5	
349	car battery 12 V	car battery 12 V	without	-	-	3	
350	car battery 12 V	car battery 12 V	without	-	-	3	
354	DC - Power Supply 40A	NGPE 40/40	448	Rohde & Schwarz	pre-m	2	
357	power sensor	NRV-Z1	861761/002	Rohde & Schwarz	24 M	-	24.05.2019
363	Kalibrieradapter HF-uns.	CR 100 A	without	Lüthi	24 M	-	30.05.2020
364	Kalibrieradapter HF-uns.	CR 100 A	128	Lüthi	24 M	-	30.05.2020
366	Ultra Compact Simulator	UCS 500 M4	V0531100594	EM-Test	12 M	-	30.05.2019
368	ROD-Antenna	HFH 2-Z1	879283/31	Rohde & Schwarz	60 M	-	17.07.2019
371	Bluetooth Tester	CBT32	100153	R&S	36 M	-	30.05.2019
373	Single-Line V-Network (50 Ohm/5µH)	ESH3-Z6	100535	Rohde & Schwarz	12 M	-	17.05.2019
374	Power Amplifier 0,8-3 GHz	60S1G3	306528	Amplifier Research	12 M	1a	20.03.2018
375	Directional Coupler	DC7144M1	306498	Amplifier Research	12 M	1a	20.03.2018
376	Horn Antenna 6 GHz	BBHA9120 E	BBHA 9120 E 179	Schwarzbeck	36 M	-	28.02.2020
377	EMI Test Receiver	ESCS 30	100160	Rohde & Schwarz	12 M	-	30.05.2019
386	Coupling Decoupling Network	CDN USB/p	19397	Schaffner	36 M	-	17.05.2020
387	Coupling Decoupling Network	CDN L-801 M2	2051	Lüthi	36 M	-	18.05.2020
388	Coupling Decoupling Network	CDN L-801 T2	1929	Lüthi	36 M	-	18.05.2020
389	Digital Multimeter	Keithley 2000	0583926	Keithley	pre-m	-	
390	Industry Acoustic System	MO 2000 Set	2127100123	Sennheiser	pre-m	2	
392	Radio Communication Tester	MT8820A	6K00000788	Anritsu	12 M	-	30.06.2019
394	Power Amplifier 80-1000 MHz	BLWA 0810-250/200	045610	Bonn-Elektronik	-	1a	20.03.2018
399	Sound Calibrator	Sound Calibrator 4231	2665101	Brüel & Kjaer	12 M	-	30.05.2019
431	Model 7405	Near-Field Probe Set	9305-2457	EMCO	-	4	
436	Univ. Radio Communication Tester	CMU 200	103083	Rohde & Schwarz	12 M	-	06.03.2019
439	UltraLog-Antenna	HL 562	100248	Rohde & Schwarz	36 M	-	10.03.2020
440	CDN for Datacable	CDN-UTP	CDN-UTP 029	EMC Partner AG, CH	36 M	-	30.05.2019
450	6dB attenuator N/N	6806.17B 6dB	-	Huber & Suhner	12 M	-	20.05.2019
454	Oscilloscope	HM 205-3	9210 P 29661	Hameg	-	4	
455	Oscilloscope	HP 54602B	US 350 336 45	Hawlett Packard	-	4	
456	DC-Power supply 0-5 A	EA 3013 S	207810	Elektro Automatik	pre-m	2	
459	DC -Power supply 0-5 A , 0-32 V	EA-PS 2032-50	910722	Elektro Automatik	pre-m	2	
460	Univ. Radio Communication Tester	CMU 200	108901	Rohde & Schwarz	12 M	-	30.05.2019
462	AF-Generator	MX-2020	-	Conrad	-	4	
463	Universal source	HP3245A	2831A03472	Agilent	-	4	
466	Digital Multimeter	Fluke 112	89210157	Fluke USA	24 M	-	30.05.2020
467	Digital Multimeter	Fluke 112	89680306	Fluke USA	36 M	-	30.05.2019
468	Digital Multimeter	Fluke 112	90090455	Fluke USA	36 M	-	30.04.2021
477	ReRadiating GPS-System	AS-47	-	Automotive Cons. Fink	-	3	
480	power meter (Fula)	NRVS	838392/031	Rohde & Schwarz	24 M	-	16.05.2019
482	filter matrix	Filter matrix SAR 1	-	CETECOM (Brl)	-	1d	
487	System CTC NSA-Verification SAR-EMI	System EMI field (SAR) NSA	-	ETS Lindgren / CETECOM	24 M	-	31.03.2019
489	EMI Test Receiver	ESU40	1000-30	Rohde & Schwarz	12 M	-	30.06.2019
491	ESD Simulator dito	ESD dito	dito307022	EM-Test	12 M	-	30.05.2019
498	Power Supply	NGPE 40/40	402	Rohde & Schwarz	pre-m	2	
500	Industry Acoustic System	MO 2000 Set	100048	Sennheiser	pre-m	2	
502	band reject filter	WRCG 1709/1786-1699/1796-	SN 9	Wainwright	pre-m	2	
503	band reject filter	WRCG 824/849-814/859-	SN 5	Wainwright	pre-m	2	
517	relais switch matrix	HF Relais Box Keithley	SE 04	Keithley	pre-m	2	
523	Digital Multimeter	L4411A	MY46000154	Agilent	24 M	-	18.05.2019
524	Voltage Drop Simulator	VDS 200	0196-16	EM Test	24 M	-	16.05.2019
525	CDN coupling network	CNA 200	1196-01	EM Test	24 M	-	16.05.2019
526	Burst Generator	EFT 200 A	0496-06	EM Test	24 M	-	16.05.2019
527	Micro Pulse Generator	MPG 200 B	0496-05	EM Test	24 M	-	16.05.2019
528	Load Dump Simulator	LD 200B	0496-06	EM Test	24 M	-	16.05.2019

Ref.-No.	Equipment	Type	Serial-No.	Manufacturer	Interval of calibration	Remark	Cal due
529	6 dB Broadband resistive power divider	Model 1515	LH 855	Weinschel	pre-m	2	
530	10 dB Broadband resistive power divider	R 416110000	LOT 9828	-	pre-m	2	
533	Impedance Stabilization Network	ISN T200A	25706	Teseq	36 M	-	18.05.2020
534	Impedance Stabilization Network	ISN T400A	24881	Teseq	36 M	-	18.05.2020
535	Impedance Stabilization Network	ISN T800	26321	Teseq	36 M	-	18.05.2020
536	Impedance Stabilization Network	ISN ST08	25867	Teseq	36 M	-	18.05.2020
541	Impedance Stabilization Network	ISN T8-Cat6	26373	Teseq Berlin	36 M	-	18.05.2020
546	Univ. Radio Communication Tester	CMU 200	106436	R&S	12 M	-	30.03.2018
547	Univ. Radio Communication Tester	CMU 200	835390/014	Rohde & Schwarz	12 M	-	05.07.2018
549	Log.Per-Antenna	HL025	1000060	Rohde & Schwarz	36/12 M	-	31.07.2018
550	System CTC S-VSWR Verification SAR-EMI	System EMI Field SAR S-VSWR	-	ETS Lindgren/CETECOM	24 M	-	30.03.2019
558	System CTC FAR S-VSWR	System CTC FAR S-VSWR	-	CTC	24 M	-	08.08.2019
574	Biconilog Hybrid Antenna	BTA-L	980026L	Frankonia	36/12 M	-	31.03.2019
584	Spectrum Analyzer	FSU 8	100248	Rohde & Schwarz	pre-m	-	
592	CDN-HDMI	CDN-HDMI	A3029004	Frankonia / Dr.Hubert	36 M	-	18.05.2020
595	Analog Adder	TS8910	-	Rohde & Schwarz	pre-m	2	
597	Univ. Radio Communication Tester	CMU 200	100347	Rohde & Schwarz	pre-m	-	
600	power meter	NRVD (Reserve)	834501/018	Rohde & Schwarz	24 M	-	17.05.2019
602	peak power sensor	NRV-Z32 (Reserve)	835080	Rohde & Schwarz	24 M	-	
607	Signal Generator	SMR 20	832033/011	Rohde & Schwarz	36 M	-	18.05.2020
611	DC power supply	E3632A	KR 75305854	Agilent	pre-m	2	
612	DC power supply	E3632A	MY 40001321	Agilent	pre-m	2	
613	Attenuator	R416120000 20dB 10W	Lot. 9828	Radiall	pre-m	2	
615	Analog Adder	TS8920	-	Rohde & Schwarz	pre-m	2	
616	Digitalmultimeter	Fluke 177	88900339	Fluke	24 M	-	30.05.2020
620	EMI Test Receiver	ESU 26	100362	Rohde-Schwarz	12 M	-	30.05.2019
625	Generic Test Load USB	Generic Test Load USB	-	CETECOM	-	2	
627	data logger	OPUS 1	201.0999.9302.6.4.1.43	G. Lufft GmbH	24 M	-	30.03.2019
637	High Speed HDMI with Ethernet 1m	HDMI cable with Ethernet 1m	-	KogiLink	-	2	
638	HDMI Kabel with Ethernet 1,5 m flach	HDMI cable with Ethernet	-	Reichelt	-	2	
640	HDMI cable 2m rund	HDMI cable 2m rund	-	Reichelt	-	2	
641	HDMI cable with Ethernet	Certified HDMI cable with	-	PureLink	-	2	
642	Wideband Radio Communication Tester	CMW 500	126089	Rohde&Schwarz	24 M	-	24.05.2019
644	Amplifierer	ZX60-2534M+	SN865701299	Mini-Circuits	-	-	
645	Power Amplifier	CBA 230M-080	T44236	TESEQ	-	1g	
670	Univ. Radio Communication Tester	CMU 200	106833	Rohde & Schwarz	24 M	-	30.05.2020
671	DC-power supply 0-5 A	EA-3013S	-	Elektro Automatik	pre-m	2	
672	Digitalmultimeter	Keithley 2700	1182075	Keithley	pre-m	-	
673	Diditalmultimeter	Keithley 2700	1181408	Keithley	pre-m	-	
674	Digitalmultimeter	Keithley 2700	1182090	Keithley	pre-m	-	
675	Digitalmultimeter	Keithley 2700	1162865	Keithley	pre-m	-	
676	Digitalmultimeter	Keithley 2700	1182092	Keithley	24 M	-	16.05.2019
677	Digitalmultimeter	Keithley 2700	1182089	Keithley	pre-m	-	
678	Power Meter	NRP	101638	Rohde&Schwarz	pre-m	-	
679	Power Supply	High Speed Power Supply	0783417	Keithley	pre-m	-	
680	Power Sensor	NRP-Z21	100622	Rohde & Schwarz	pre-m	-	
682	Vector Signal Generator	SMU 200A	101319	Rohde & Schwarz	pre-m	-	
683	Spectrum Analyzer	FSU 26	200571	Rohde & Schwarz	12 M	-	30.05.2019
684	Widerstand 100 Ohm	SL 403-403	72973	Teseq	pre-m	-	
685	Widerstand 100 OHM	SL 403-403	72974	Teseq	pre-m	-	
686	Field Analyzer	EHP-200A	160WX30702	Narda Safety Test Solutions	24 M	-	29.03.2019
687	Signal Generator	SMF 100A	102073	Rohde&Schwarz	12 M	-	30.05.2019
689	Vector Signal Generator	SMU200	100970	Rohde&Schwarz	24 M	-	30.06.2020
690	Spectrum Analyzer	FSU	100302/026	Rohde&Schwarz	24 M	-	16.05.2019
692	Bluetooth Tester	CBT 32	100236	Rohde & Schwarz	36 M	-	29.05.2020
695	ReRadiating GPS-System	AS-47	G1406003500001	Automotive Cons. Fink	-	3	
698	Sound Calibrator	Sound Calibrator 4231	2035208	Brüel & Kjaer	12 M	-	30.05.2019
699	Audio Analyzer	UPL16	833494/005	Rohde & Schwarz	12 M	-	30.05.2019
700	Audio Analyzer	UPL 16	830695/0016	Rohde&Schwarz	24 M	-	30.05.2020
701	CMW500 wide. Radio Comm.	CMW500	158150	Rohde & Schwarz	12 M	-	01.05.2017
705	NRV-Z1	Power Sensor	893350/020	Rohde & Schwarz	12 M	-	30.05.2019
706	NRV-Z1	Power Sensor	830961/001	Rohde &Schwarz	12 M	-	30.05.2019
707	RadiCentre	CTR-1004B	10I00037SN038-1	D.A.R.E!! Instruments	24 M	-	
708	Laser powered Electrical Field Strength Probe	RadiSense 6	10I00037SN038	D.A.R.E.!! Instruments BV	24 M	-	31.03.2019
710	RF Power Amplifier	BLMA 2560-100	1610879	Bonn Elektronik	12 M	-	20.03.2018
711	Harmonic Mixer 90 GHz - 140GHz	RPG FS-Z140	101004	RPG	36 M	-	22.02.2020
712	Harmonic Mixer 75 GHz - 110GHz	FS-Z110	101468	Rohde & Schwarz	36 M	-	22.02.2020
713	Harmonic Mixer, 50 GHz - 75GHz	FS-Z75	101022	Rohde & Schwarz	36 M	-	22.05.2020

Ref.-No.	Equipment	Type	Serial-No.	Manufacturer	Interval of calibration	Remark	Cal due
714	Signal Analyzer 67GHz	FSW67	104023	Rohde & Schwarz	24 M	-	28.02.2020
715	Harmonic Mixer, 140 GHz - 220GHz	FS-Z220	101009	RPG Radiometer Physics	36 M	-	03.08.2020
716	Harmonic Mixer 220 GHz to 325 GHZ	FS-Z325	101005	RPG Radiometer Physics	36 M	-	13.02.2020
717	Signal Generator	SMP02	830682/005	Rohde&Schwarz	36 M	-	
718	Robot	Dasy 5 / TX90	F11/5GM9A1/A/01	Stäubli	pre-m	-	
747	Spectrum Analyzer	FSU 26	200152	Rohde & Schwarz	12 M	-	30.05.2019
751	Digital Optical System	optoCAN-FD Transceiver	17-010416	mk-messtechnik GmbH	-	-	
752	Digital Optical System	optoCAN-FD Transceiver	17-010083	mk-messtechnik GmbH	-	-	
753	Digital Optical System	optoCAN-FD Transceiver	17-010084	mk-messtechnik GmbH	-	-	
754	Digital Optical System	optoCAN-FD Transceiver	17-010415	mk-messtechnik GmbH	-	-	
755	Digital Optical System	optoLAN-100-MAX	17-010795	mk-messtechnik GmbH	-	-	
757	WIDEBAND RADIO COMMUNICATION	CMW500	163673	Rohde&Schwarz	12 M	-	20.07.2018
758	Signal Generator	SMU 200A	100754	Rohde & Schwarz	24 M	-	11.10.2019
780	Spectrum Analyzer	FSH3	101726	Rohde & Schwarz	24 M	-	19.07.2019
781	Power Supply	PS 2042-10 B	2815450369	Elektro-Automatik GmbH	-	-	
782	Power Supply	PS 2042-10 B	2815450348	lektro-Automatik GmbH &Co.KG	-	-	
783	Spectrum Analyzer	FSU 26	100414	Rohde & Schwarz	12 M	-	30.05.2019
784	Power Supply	NGSM 32/10	00196	Rohde & Schwarz	12 M	-	
785	RSP	RF Step Attenuator	860712/012	Rohde & Schwarz	12 M	-	
788	Precision Omnidirectional Dipole	POD 618	6182558/Q	Seibersdorf Labaratories	36 M	-	30.06.2021
789	Precision Omnidirectional Dipole	POD 16	162496/Q	Seibersdorf Laboratories	36 M	-	30.06.2021

8.1.3. Legend

Note / remarks		Calibrated during system calibration:
	1a	System CTC-SAR-EMS (Ref.-No. 442)
	1b	System-CTC-EMS-Conducted (Ref.-No. 335)
	1c	System CTC-FAR-EMI-RSE (Ref.-No . 443)
	1d	System CTC-SAR-EMI (Ref.-No . 441)
	1e	System CTC-OATS (EMI radiated) (Ref.-No. 337)
	1 f	System CTC-CTIA-OTA (Ref.-No . 420)
	1 g	System CTC-FAR-EMS (Ref.-No . 444)
	2	Calibration or equipment check immediately before measurement
	3	Regulatory maintained equipment for functional check or support purpose
	4	Ancillary equipment without calibration e.g. mechanical equipment or monitoring equipment
	5	Test System

Interval of calibration	12 M	12 month
	24 M	24 month
	36 M	36 month
	24/12 M	Calibration every 24 months, between this every 12 months internal validation
	36/12 M	Calibration every 36 months, between this every 12 months internal validation
	Pre-m	Check before starting the measurement
	-	Without calibration

9. Versions of test reports (change history)

Version	Applied changes	Date of release
C2	Internal chapter cross references updated and additional page with remark End-of-Report included	2018-10-11
C1	Value of antenna gain changed	2018-09-13
--	Initial release	2018-08-18

End of test report