1. WCDMA II Top 5mm

Date/Time: 1/16/2018 5:16:13 PM

Test Laboratory: Cetecom Inc. SAR 1 Lab

DUT: ID System; Type: EUT; Serial: Not Specified

Communication System: UID 10011 - CAB, UMTS-FDD (WCDMA); Frequency: 1880 MHz
Medium: MSL1900_Batch 110615-4
Medium parameters used: f = 1880 MHz; σ = 1.586 S/m; ε_r = 52.675; ρ = 1000 kg/m^3
Phantom section: Flat Section
Measurement Standard: DASY5 (IEEE/IEC/ANSI C63.19-2007)
Procedure Notes: Test Technician: Lynn/Joseph Air Temperature: 21.2ºC Medium Temperature: 21.3ºC; Comments:

DASY Configuration:

- Probe: ES3DV3 - SN3323; ConvF(4.97, 4.97, 4.97); Calibrated: 5/12/2017;
- Sensor-Surface: 3mm (Mechanical Surface Detection), z = 2.0
- Electronics: DAE4 Sn1266; Calibrated: 5/16/2017
- Phantom: ELI v4.0_Front; Type: QDOVA001BB; Serial: TP:xxxx
- DASY52 52.8.8(1222);

Flat-Section/Front 0mm/Area Scan (12x13x1): Measurement grid: dx=15mm, dy=15mm
Maximum value of SAR (measured) = 0.950 W/kg

Flat-Section/Front 0mm/Zoom Scan (8x8x7)/Cube 0: Measurement grid: dx=5mm, dy=5mm, dz=5mm
Reference Value = 16.05 V/m; Power Drift = -0.31 dB
Peak SAR (extrapolated) = 1.56 W/kg
SAR(1 g) = 0.969 W/kg; SAR(10 g) = 0.550 W/kg
Maximum value of SAR (measured) = 1.17 W/kg

V5.1 2013-01-09 This report shall not be reproduced except in full without the written approval of:
CETECOM Inc. ◆ SAR ◆ 411 Dixon Landing Road ◆ Milpitas, CA 95035 ◆ U.S.A.

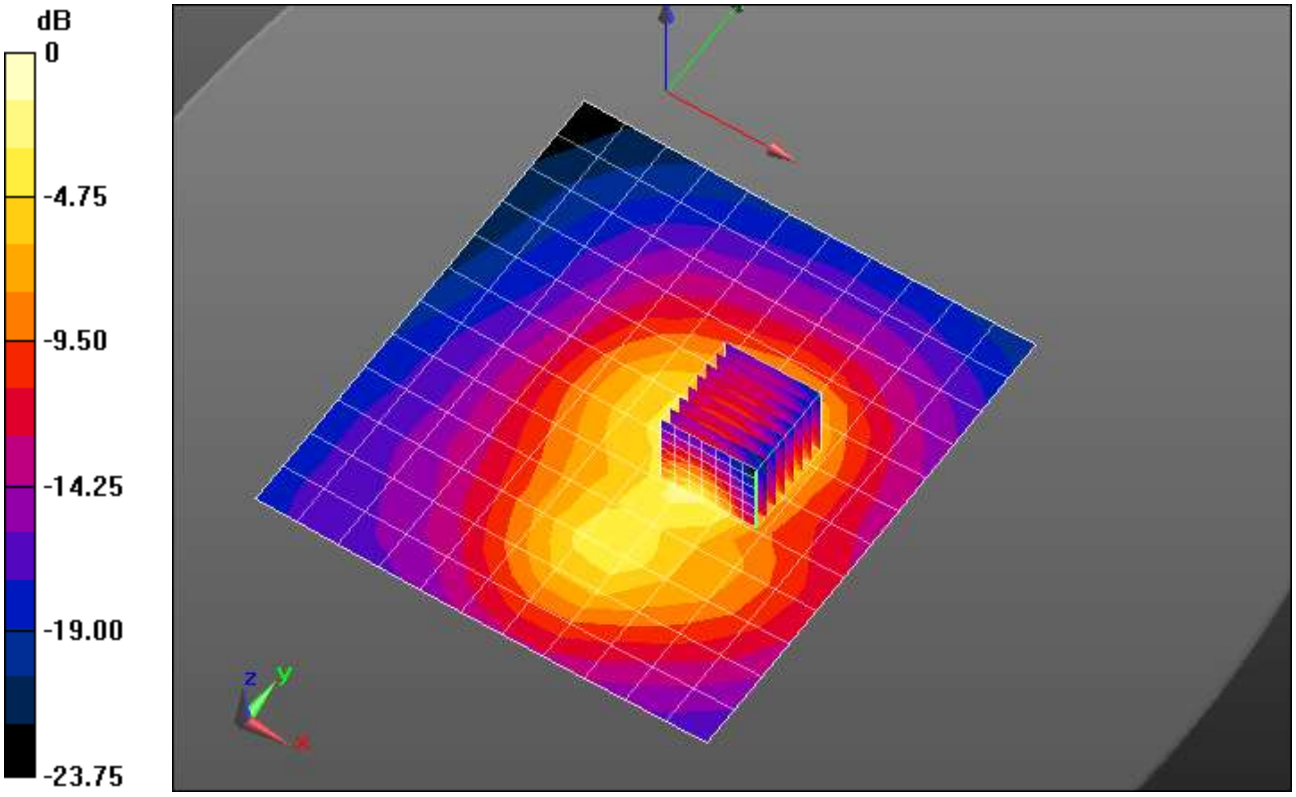

0 dB = 0.950 W/kg = -0.22 dBW/kg

2. WCDMA II Bottom 7mm

Date/Time: 1/11/2018 4:07:58 PM
Test Laboratory: Cetecom Inc. SAR 1 Lab
DUT: ID System; Type: EUT; Serial: Not Specified
Communication System: UID 10011 - CAB, UMTS-FDD (WCDMA); Frequency: 1880 MHz
Medium: MSL1900_Batch 110615-4
Medium parameters used: f = 1880 MHz; σ = 1.527 S/m; εr = 53.288; ρ = 1000 kg/m3
Phantom section: Flat Section
Measurement Standard: DASY5 (IEEE/IEC/ANSI C63.19-2007)

Procedure Notes: Test Technician: Lynn/Joseph Air Temperature: 21.0ãC Medium Temperature: 21.3ãC; Comments:

DASY Configuration:
I Probe: ES3DV3 - SN3323; ConvF(4.97, 4.97, 4.97); Calibrated: 5/12/2017;
I Sensor-Surface: 3mm (Mechanical Surface Detection), z = 2.0
I Electronics: DAE4 Sn1266; Calibrated: 5/16/2017
I Phantom: ELI v4.0_Front; Type: QDOVA001BB; Serial: TP:xxxx
I DASY52 52.8.8(1222);
Flat-Section/Bottom 7mm/Area Scan (10x9x1): Measurement grid: dx=15mm, dy=15mm
Maximum value of SAR (measured) = 1.19 W/kg
Flat-Section/Bottom 7mm/Zoom Scan (7x7x7)/Cube 0: Measurement grid: dx=5mm, dy=5mm, dz=5mm
Reference Value = 3.648 V/m; Power Drift = 0.53 dB
Peak SAR (extrapolated) = 1.88 W/kg
SAR(1 g) = 1.04 W/kg; SAR(10 g) = 0.559 W/kg
Maximum value of SAR (measured) = 1.30 W/kg

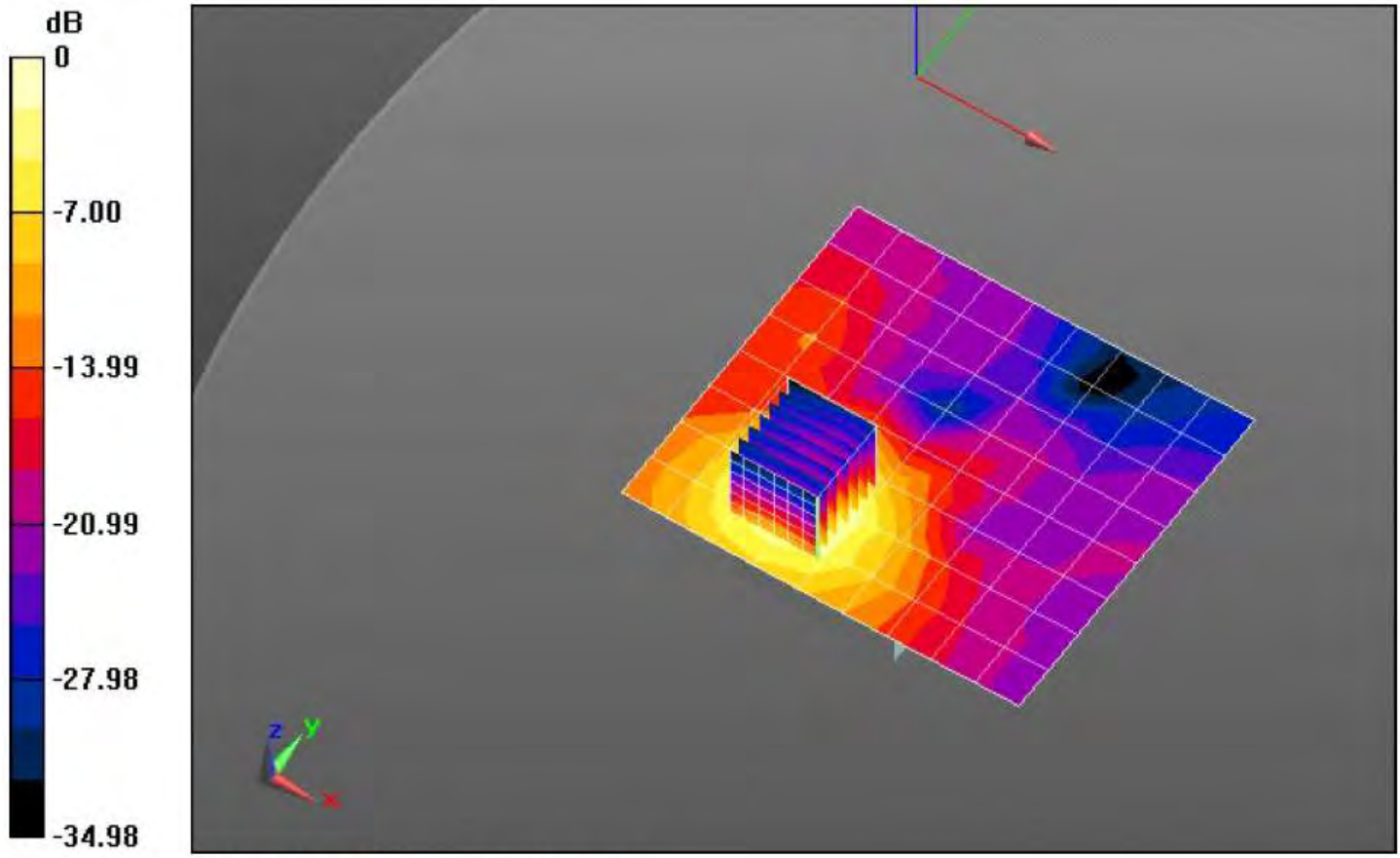

0 dB = 1.19 W/kg = 0.77 dBW/kg

3. WCDMA II Bottom 7mm repeated

Date/Time: 1/12/2018 11:00:41 AM
Test Laboratory: Cetecom Inc. SAR 1 Lab
DUT: ID System; Type: EUT; Serial: Not Specified
Communication System: UID 10011 - CAB, UMTS-FDD (WCDMA); Frequency: 1880 MHz
Medium: MSL1900_Batch 110615-4
Medium parameters used: f = 1880 MHz; σ = 1.527 S/m; εr = 53.288; ρ = 1000 kg/m3
Phantom section: Flat Section
Measurement Standard: DASY5 (IEEE/IEC/ANSI C63.19-2007)

Procedure Notes: Test Technician: Lynn/Joseph Air Temperature: 21.0ãC Medium Temperature: 21.3ãC; Comments:

DASY Configuration:
I Probe: ES3DV3 - SN3323; ConvF(4.97, 4.97, 4.97); Calibrated: 5/12/2017;
I Sensor-Surface: 3mm (Mechanical Surface Detection), z = 2.0
I Electronics: DAE4 Sn1266; Calibrated: 5/16/2017
I Phantom: ELI v4.0_Front; Type: QDOVA001BB; Serial: TP:xxxx
I DASY52 52.8.8(1222);
Flat-Section/Bottom 7mm/Area Scan (10x9x1): Measurement grid: dx=15mm, dy=15mm
Maximum value of SAR (measured) = 1.14 W/kg
Flat-Section/Bottom 7mm/Zoom Scan (7x7x7)/Cube 0: Measurement grid: dx=5mm, dy=5mm, dz=5mm
Reference Value = 2.822 V/m; Power Drift = 1.90 dB
Peak SAR (extrapolated) = 2.18 W/kg
SAR(1 g) = 1.2 W/kg; SAR(10 g) = 0.646 W/kg
Maximum value of SAR (measured) = 1.50 W/kg

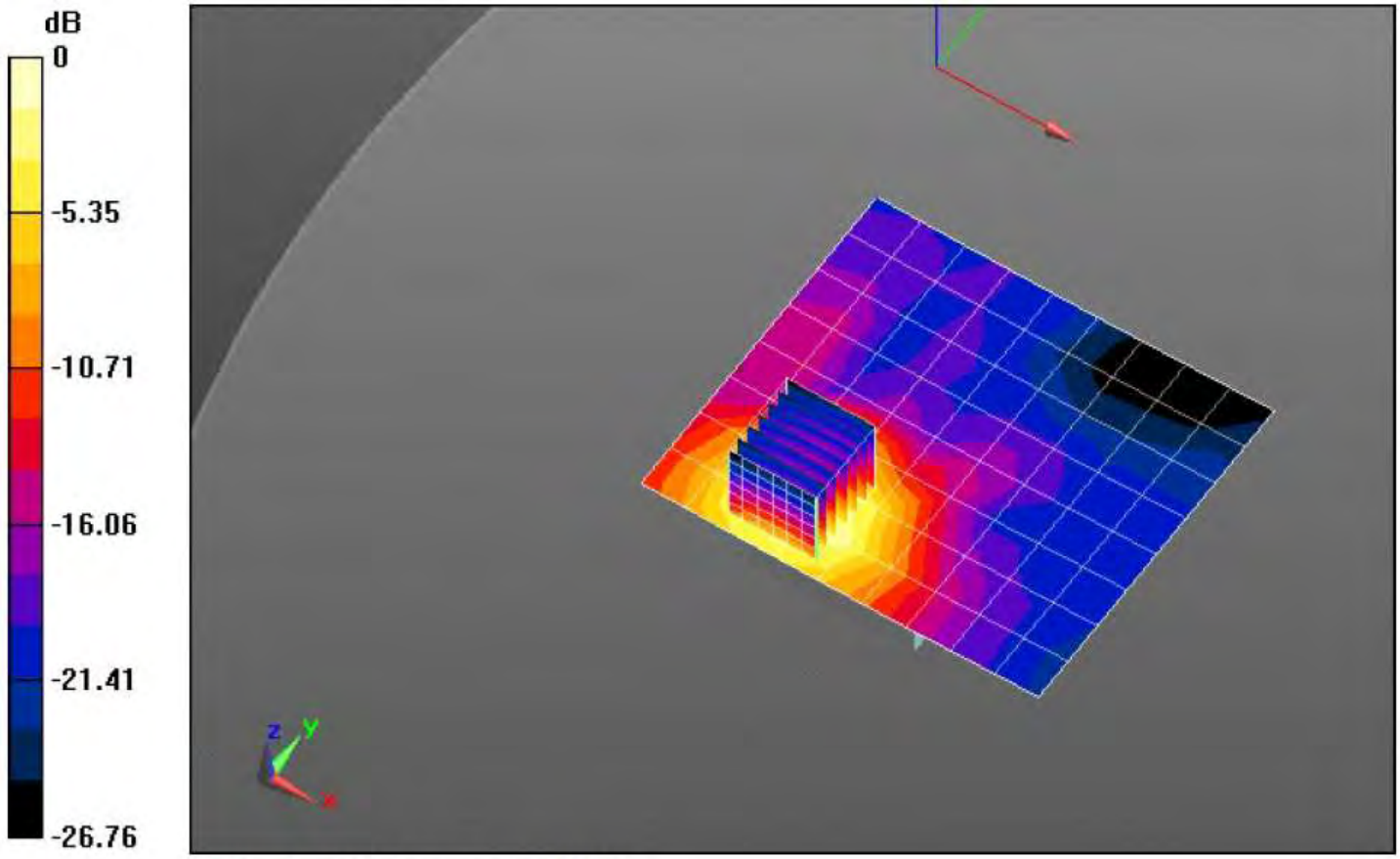

0 dB = 1.14 W/kg = 0.58 dBW/kg

4. WCDMA II Antenna side 11mm

Date/Time: 1/16/2018 5:51:50 PM

Test Laboratory: Cetecom Inc. SAR 1 Lab

DUT: ID System; Type: EUT; Serial: Not Specified

Communication System: UID 10011 - CAB, UMTS-FDD (WCDMA); Frequency: 1950 MHz
Medium: MSL1900_Batch 110615-4
Medium parameters used (extrapolated): f = 1950 MHz; σ = 1.509 S/m; ε_r = 53.329; ρ = 1000 kg/m^3
Phantom section: Flat Section
Measurement Standard: DASY5 (IEEE/IEC/ANSI C63.19-2007)
Procedure Notes: Test Technician: Lynn Air Temperature: 20.1ॐC Medium Temperature: 23.3ॐC; Comments:

DASY Configuration:

- Probe: ES3DV3 - SN3323; ConvF(5.09, 5.09, 5.09); Calibrated: 5/12/2017;
- Sensor-Surface: 3mm (Mechanical Surface Detection), z = 2.0
- Electronics: DAE4 Sn1266; Calibrated: 5/16/2017
- Phantom: ELI v4.0_Front; Type: QDOVA001BB; Serial: TP:xxxx
- DASY52 52.8.8(1222);

Flat-Section/Antenna Side 9mm/Area Scan (10x9x1): Measurement grid: dx=15mm, dy=15mm

Info: Extrapolated medium parameters used for SAR evaluation.
Maximum value of SAR (measured) = 1.41 W/kg

Flat-Section/Antenna Side 9mm/Zoom Scan (8x8x7)/Cube 0: Measurement grid: dx=5mm, dy=5mm, dz=5mm

Reference Value = 14.47 V/m; Power Drift = 0.17 dB
Peak SAR (extrapolated) = 2.07 W/kg
SAR(1 g) = 1.22 W/kg; SAR(10 g) = 0.685 W/kg

Info: Extrapolated medium parameters used for SAR evaluation.
Maximum value of SAR (measured) = 1.48 W/kg

V5.1 2013-01-09 This report shall not be reproduced except in full without the written approval of:
CETECOM Inc. ◆ SAR ◆ 411 Dixon Landing Road ◆ Milpitas, CA 95035 ◆ U.S.A.

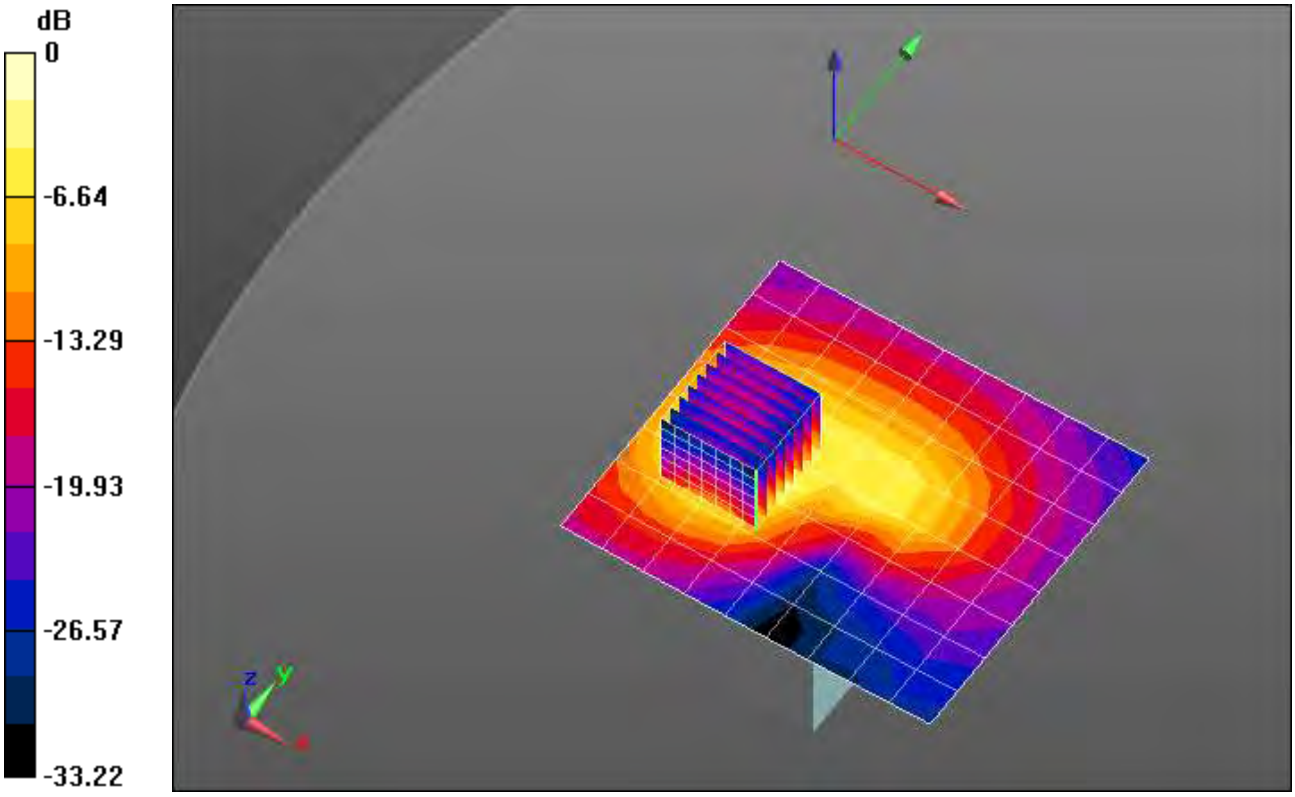

0 dB = 1.41 W/kg = 1.49 dBW/kg

5. WCDMA II Antenna side 11mm repeated

Date/Time: 1/16/2018 6:30:22 PM

Test Laboratory: Cetecom Inc. SAR 1 Lab

DUT: ID System; Type: EUT; Serial: Not Specified

Communication System: UID 10011 - CAB, UMTS-FDD (WCDMA); Frequency: 1950 MHz
Medium: MSL1900_Batch 110615-4
Medium parameters used (extrapolated): f = 1950 MHz; σ = 1.509 S/m; ε_r = 53.329; ρ = 1000 kg/m^3
Phantom section: Flat Section
Measurement Standard: DASY5 (IEEE/IEC/ANSI C63.19-2007)

Procedure Notes: Test Technician: Lynn Air Temperature: 20.1ºC Medium Temperature: 23.3ºC; Comments:

DASY Configuration:

- Probe: ES3DV3 - SN3323; ConvF(5.09, 5.09, 5.09); Calibrated: 5/12/2017;
- Sensor-Surface: 3mm (Mechanical Surface Detection), z = 2.0
- Electronics: DAE4 Sn1266; Calibrated: 5/16/2017
- Phantom: ELI v4.0_Front; Type: QDOVA001BB; Serial: TP:xxxx
- DASY52 52.8.8(1222);

Flat-Section/Antenna Side 9mm/Area Scan (10x9x1): Measurement grid: dx=15mm, dy=15mm

Info: Extrapolated medium parameters used for SAR evaluation.
Maximum value of SAR (measured) = 1.40 W/kg

Flat-Section/Antenna Side 9mm/Zoom Scan (8x8x7)/Cube 0: Measurement grid: dx=5mm, dy=5mm, dz=5mm

Reference Value = 14.87 V/m; Power Drift = -0.14 dB
Peak SAR (extrapolated) = 2.10 W/kg
SAR(1 g) = 1.24 W/kg; SAR(10 g) = 0.690 W/kg

Info: Extrapolated medium parameters used for SAR evaluation.
Maximum value of SAR (measured) = 1.51 W/kg

V5.1 2013-01-09 This report shall not be reproduced except in full without the written approval of:
CETECOM Inc. ◆ SAR ◆ 411 Dixon Landing Road ◆ Milpitas, CA 95035 ◆ U.S.A.

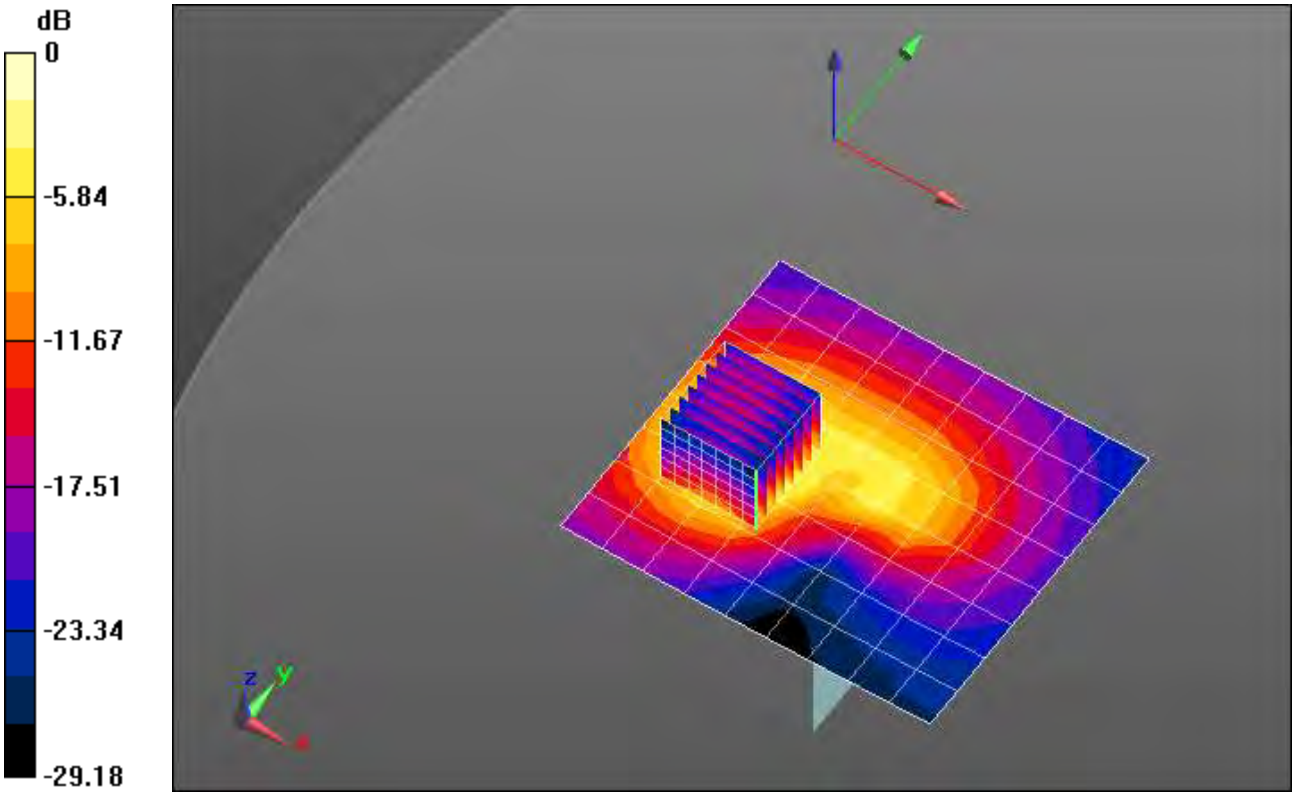

0 dB = 1.40 W/kg = 1.47 dBW/kg

6. WCDMA V Top 0mm

Date/Time: 1/11/2018 11:03:53 AM
Test Laboratory: Cetecom Inc. SAR 1 Lab
DUT: ID System; Type: EUT; Serial: Not Specified
Communication System: UID 10011 - CAB, UMTS-FDD (WCDMA); Frequency: 836.6 MHz
Medium: MSL900_Batch 110518-7
Medium parameters used: f = 837 MHz; σ = 0.987 S/m; εr = 52.68; ρ = 1000 kg/m3
Phantom section: Flat Section
Measurement Standard: DASY5 (IEEE/IEC/ANSI C63.19-2007)

Procedure Notes: Test Technician: Lynn Air Temperature: 23.1ăC Medium Temperature: 20.7ăC; Comments:

DASY Configuration:
I Probe: ES3DV3 - SN3323; ConvF(6.38, 6.38, 6.38); Calibrated: 5/12/2017;
I Sensor-Surface: 3mm (Mechanical Surface Detection), z = 2.0
I Electronics: DAE4 Sn1266; Calibrated: 5/16/2017
I Phantom: ELI 4.0; Type: QDOVA001BA; Serial: 1092
I DASY52 52.8.8(1222);
Flat-Section/Front 0mm/Area Scan (12x13x1): Measurement grid: dx=15mm, dy=15mm
Maximum value of SAR (measured) = 0.604 W/kg
Flat-Section/Front 0mm/Zoom Scan (7x7x7)/Cube 0: Measurement grid: dx=5mm, dy=5mm, dz=5mm
Reference Value = 17.06 V/m; Power Drift = -0.83 dB
Peak SAR (extrapolated) = 0.990 W/kg
SAR(1 g) = 0.581 W/kg; SAR(10 g) = 0.337 W/kg
Maximum value of SAR (measured) = 0.695 W/kg

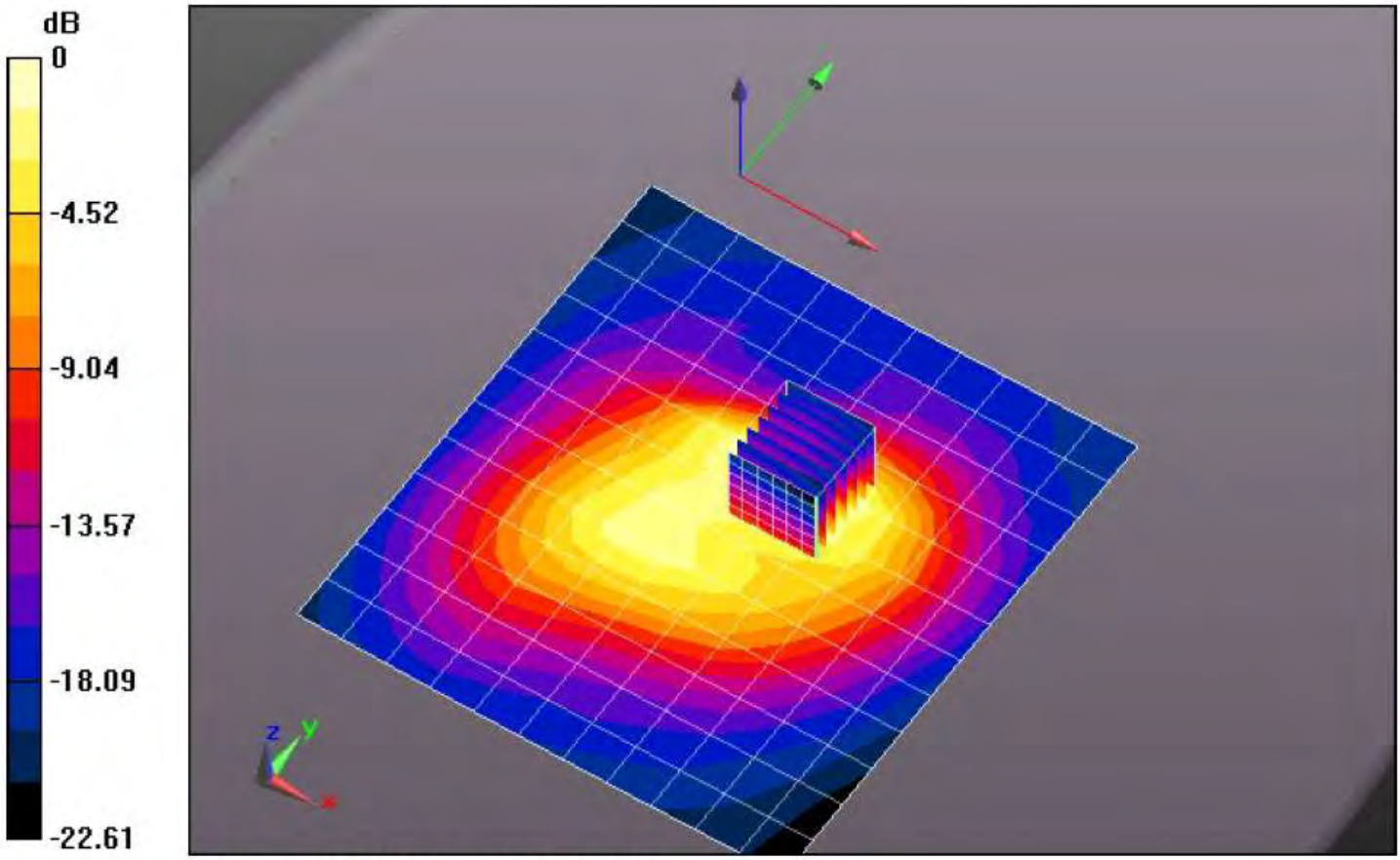

0 dB = 0.604 W/kg = -2.19 dBW/kg

7. WCDMA V Bottom 0mm

Date/Time: 1/11/2018 11:36:46 AM
Test Laboratory: Cetecom Inc. SAR 1 Lab
DUT: ID System; Type: EUT; Serial: Not Specified
Communication System: UID 10011 - CAB, UMTS-FDD (WCDMA); Frequency: 836.6 MHz
Medium: MSL900_Batch 110518-7
Medium parameters used: f = 837 MHz; σ = 0.987 S/m; εr = 52.68; ρ = 1000 kg/m3
Phantom section: Flat Section
Measurement Standard: DASY5 (IEEE/IEC/ANSI C63.19-2007)

Procedure Notes: Test Technician: Lynn Air Temperature: 22.3°C Medium Temperature: 23.3°C; Comments:

DASY Configuration:
I Probe: ES3DV3 - SN3323; ConvF(6.38, 6.38, 6.38); Calibrated: 5/12/2017;
I Sensor-Surface: 3mm (Mechanical Surface Detection), z = 2.0
I Electronics: DAE4 Sn1266; Calibrated: 5/16/2017
I Phantom: ELI 4.0; Type: QDOVA001BA; Serial: 1092
I DASY52 52.8.8(1222);
Flat-Section/Front 0mm/Area Scan (10x9x1): Measurement grid: dx=15mm, dy=15mm
Maximum value of SAR (measured) = 0.678 W/kg
Flat-Section/Front 0mm/Zoom Scan (8x8x7)/Cube 0: Measurement grid: dx=5mm, dy=5mm, dz=5mm
Reference Value = 22.50 V/m; Power Drift = -0.07 dB
Peak SAR (extrapolated) = 0.980 W/kg
SAR(1 g) = 0.601 W/kg; SAR(10 g) = 0.371 W/kg
Maximum value of SAR (measured) = 0.715 W/kg

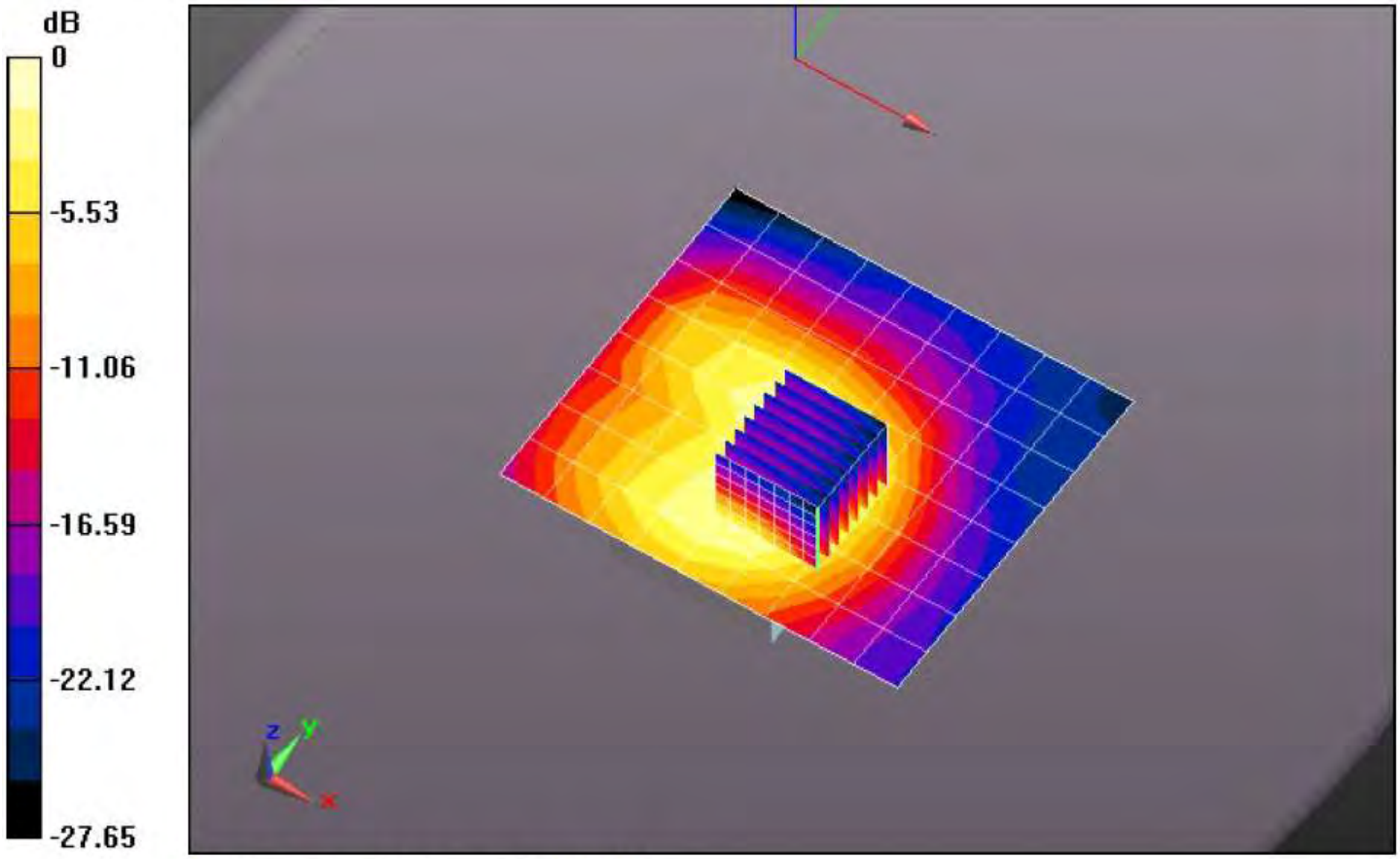

0 dB = 0.678 W/kg = -1.69 dBW/kg

V5.1 2013-01-09 This report shall not be reproduced except in full without the written approval of:
CETECOM Inc. ◆ SAR ◆ 411 Dixon Landing Road ◆ Milpitas, CA 95035 ◆ U.S.A.

8. WCDMA V Antenna 0mm

Date/Time: 1/11/2018 12:04:48 PM
Test Laboratory: Cetecom Inc. SAR 1 Lab
DUT: ID System; Type: EUT; Serial: Not Specified
Communication System: UID 10011 - CAB, UMTS-FDD (WCDMA); Frequency: 836.6 MHz
Medium: MSL900_Batch 110518-7
Medium parameters used: f = 837 MHz; σ = 0.987 S/m; εr = 52.68; ρ = 1000 kg/m3
Phantom section: Flat Section
Measurement Standard: DASY5 (IEEE/IEC/ANSI C63.19-2007)

Procedure Notes: Test Technician: Lynn Air Temperature: 21.1°C Medium Temperature: 23.3°C; Comments:

DASY Configuration:
I Probe: ES3DV3 - SN3323; ConvF(6.38, 6.38, 6.38); Calibrated: 5/12/2017;
I Sensor-Surface: 3mm (Mechanical Surface Detection), z = 2.0
I Electronics: DAE4 Sn1266; Calibrated: 5/16/2017
I Phantom: ELI 4.0; Type: QDOVA001BA; Serial: 1092
I DASY52 52.8.8(1222);
Flat-Section/Front 0mm/Area Scan (10x9x1): Measurement grid: dx=15mm, dy=15mm
Maximum value of SAR (measured) = 1.08 W/kg
Flat-Section/Front 0mm/Zoom Scan (8x8x7)/Cube 0: Measurement grid: dx=5mm, dy=5mm, dz=5mm
Reference Value = 33.06 V/m; Power Drift = -0.13 dB
Peak SAR (extrapolated) = 1.52 W/kg
SAR(1 g) = 0.853 W/kg; SAR(10 g) = 0.468 W/kg
Maximum value of SAR (measured) = 1.06 W/kg

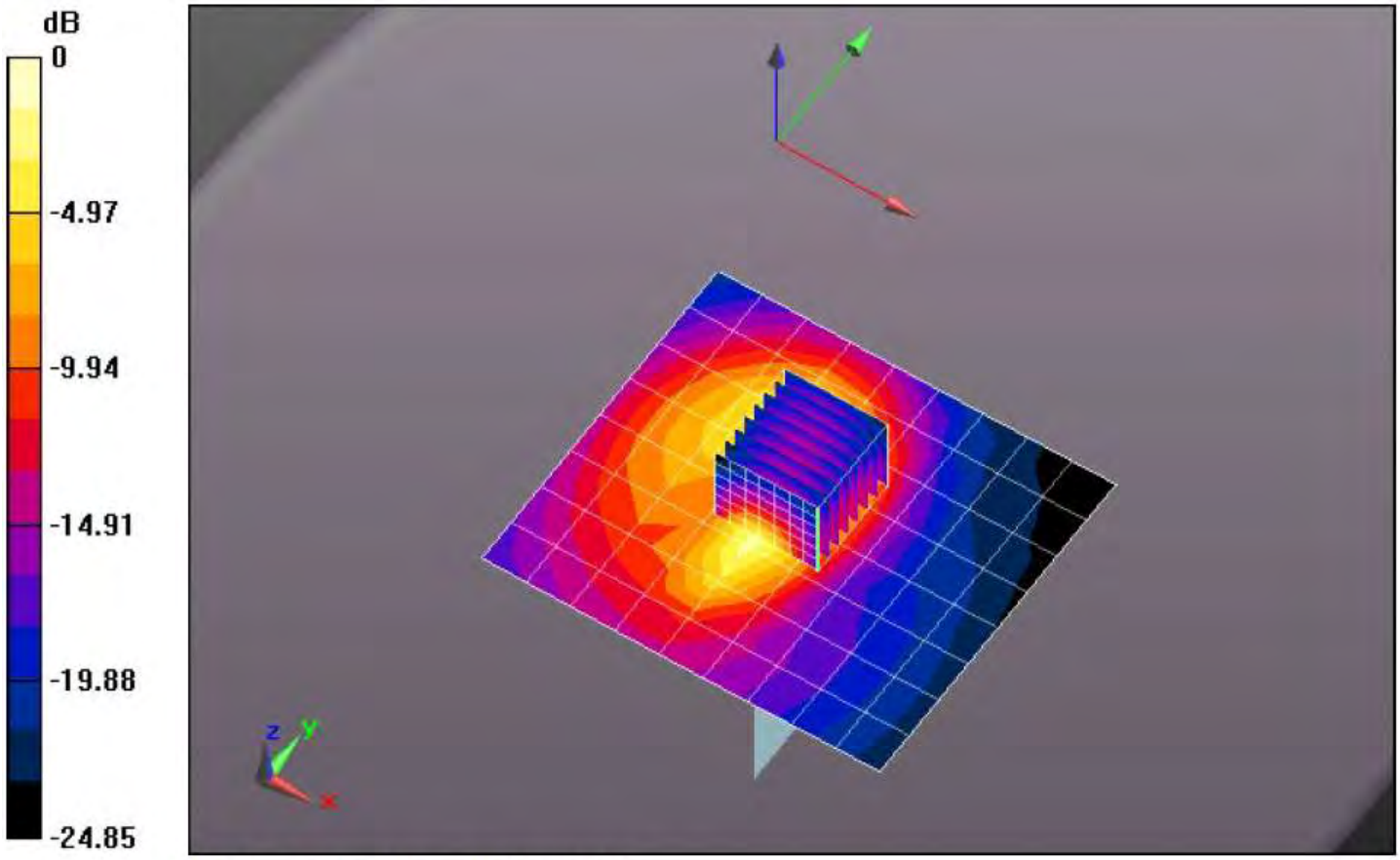

0 dB = 1.08 W/kg = 0.34 dBW/kg

9. LTE-2 Top 0mm

Date/Time: 11/22/2017 11:27:32 AM
Test Laboratory: Cetecom Inc. SAR 1 Lab
DUT: ID System; Type: EUT; Serial: Not Specified
Communication System: UID 10175 - CAB, LTE-FDD (SC-FDMA, 1 RB, 10 MHz, QPSK); Frequency: 1880 MHz
Medium: MSL1900_Batch 110615-4
Medium parameters used: f = 1880 MHz; σ = 1.559 S/m; εr = 50.871; ρ = 1000 kg/m3
Phantom section: Flat Section
Measurement Standard: DASY5 (IEEE/IEC/ANSI C63.19-2007)

Procedure Notes: Test Technician: Lynn/Joseph Air Temperature: 22.6ãC Medium Temperature: 20.5ãC; Comments:

DASY Configuration:
I Probe: ES3DV3 - SN3323; ConvF(4.97, 4.97, 4.97); Calibrated: 5/12/2017;
I Sensor-Surface: 3mm (Mechanical Surface Detection), z = 2.0
I Electronics: DAE4 Sn1266; Calibrated: 5/16/2017
I Phantom: ELI v4.0_Front; Type: QDOVA001BB; Serial: TP:xxxx
I DASY52 52.8.8(1222);
Flat-Section/Front 0mm/Area Scan (91x81x1): Interpolated grid: dx=1.500 mm, dy=1.500 mm
Maximum value of SAR (interpolated) = 1.07 W/kg
Flat-Section/Front 0mm/Area Scan (10x9x1): Measurement grid: dx=15mm, dy=15mm
Maximum value of SAR (measured) = 0.743 W/kg
Flat-Section/Front 0mm/Zoom Scan (8x8x7)/Cube 0: Measurement grid: dx=5mm, dy=5mm, dz=5mm
Reference Value = 14.07 V/m; Power Drift = -0.39 dB
Peak SAR (extrapolated) = 1.51 W/kg
SAR(1 g) = 0.892 W/kg; SAR(10 g) = 0.476 W/kg
Maximum value of SAR (measured) = 1.11 W/kg
Flat-Section/Front 0mm/Zoom Scan (36x36x36)/Cube 0: Interpolated grid: dx=1.000 mm, dy=1.000 mm, dz=1.000 mm
Reference Value = 14.07 V/m; Power Drift = -0.39 dB
Penetration depth = 10.98 (10.39, 10.96) [mm]
Maximum value of SAR (interpolated) = 1.51 W/kg

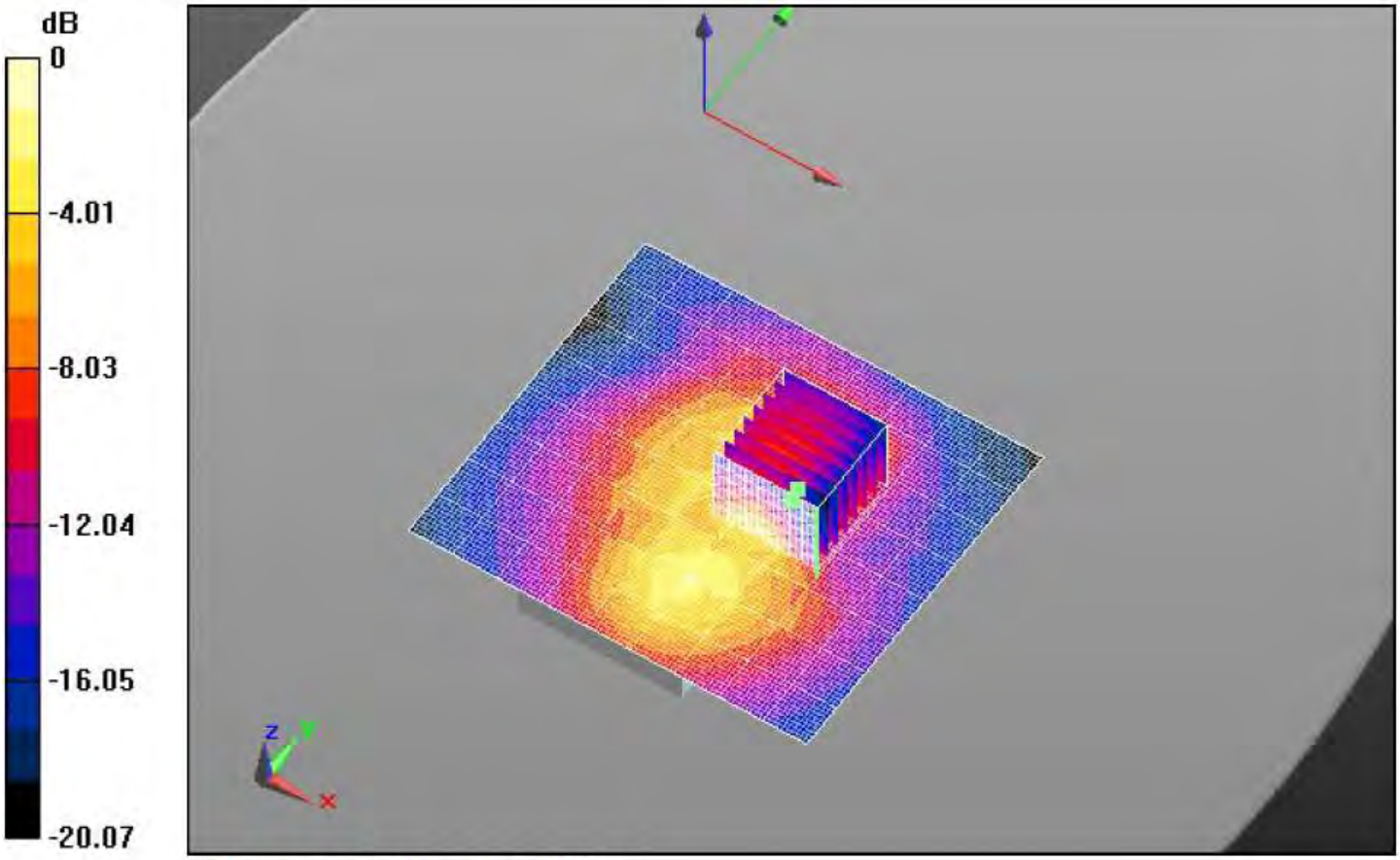

0 dB = 1.07 W/kg = 0.29 dBW/kg

10. LTE-2 Top 0mm repeat

Date/Time: 11/22/2017 11:58:34 AM
Test Laboratory: Cetecom Inc. SAR 1 Lab
DUT: ID System; Type: EUT; Serial: Not Specified
Communication System: UID 10175 - CAB, LTE-FDD (SC-FDMA, 1 RB, 10 MHz, QPSK); Frequency: 1880 MHz
Medium: MSL1900_Batch 110615-4
Medium parameters used: f = 1880 MHz; σ = 1.559 S/m; εr = 50.871; ρ = 1000 kg/m3
Phantom section: Flat Section
Measurement Standard: DASY5 (IEEE/IEC/ANSI C63.19-2007)

Procedure Notes: Test Technician: Lynn/Joseph Air Temperature: 22.6ãC Medium Temperature: 20.5ãC; Comments:

DASY Configuration:
I Probe: ES3DV3 - SN3323; ConvF(4.97, 4.97, 4.97); Calibrated: 5/12/2017;
I Sensor-Surface: 3mm (Mechanical Surface Detection), z = 2.0
I Electronics: DAE4 Sn1266; Calibrated: 5/16/2017
I Phantom: ELI v4.0_Front; Type: QDOVA001BB; Serial: TP:xxxx
I DASY52 52.8.8(1222);
Flat-Section/Front 0mm/Area Scan (91x81x1): Interpolated grid: dx=1.500 mm, dy=1.500 mm
Maximum value of SAR (interpolated) = 1.06 W/kg
Flat-Section/Front 0mm/Area Scan (10x9x1): Measurement grid: dx=15mm, dy=15mm
Maximum value of SAR (measured) = 0.730 W/kg
Flat-Section/Front 0mm/Zoom Scan (8x8x7)/Cube 0: Measurement grid: dx=5mm, dy=5mm, dz=5mm
Reference Value = 13.59 V/m; Power Drift = -0.06 dB
Peak SAR (extrapolated) = 1.50 W/kg
SAR(1 g) = 0.887 W/kg; SAR(10 g) = 0.474 W/kg
Maximum value of SAR (measured) = 1.09 W/kg
Flat-Section/Front 0mm/Zoom Scan (36x36x36)/Cube 0: Interpolated grid: dx=1.000 mm, dy=1.000 mm, dz=1.000 mm
Reference Value = 13.59 V/m; Power Drift = -0.06 dB
Penetration depth = 10.98 (10.41, 10.91) [mm]
Maximum value of SAR (interpolated) = 1.50 W/kg

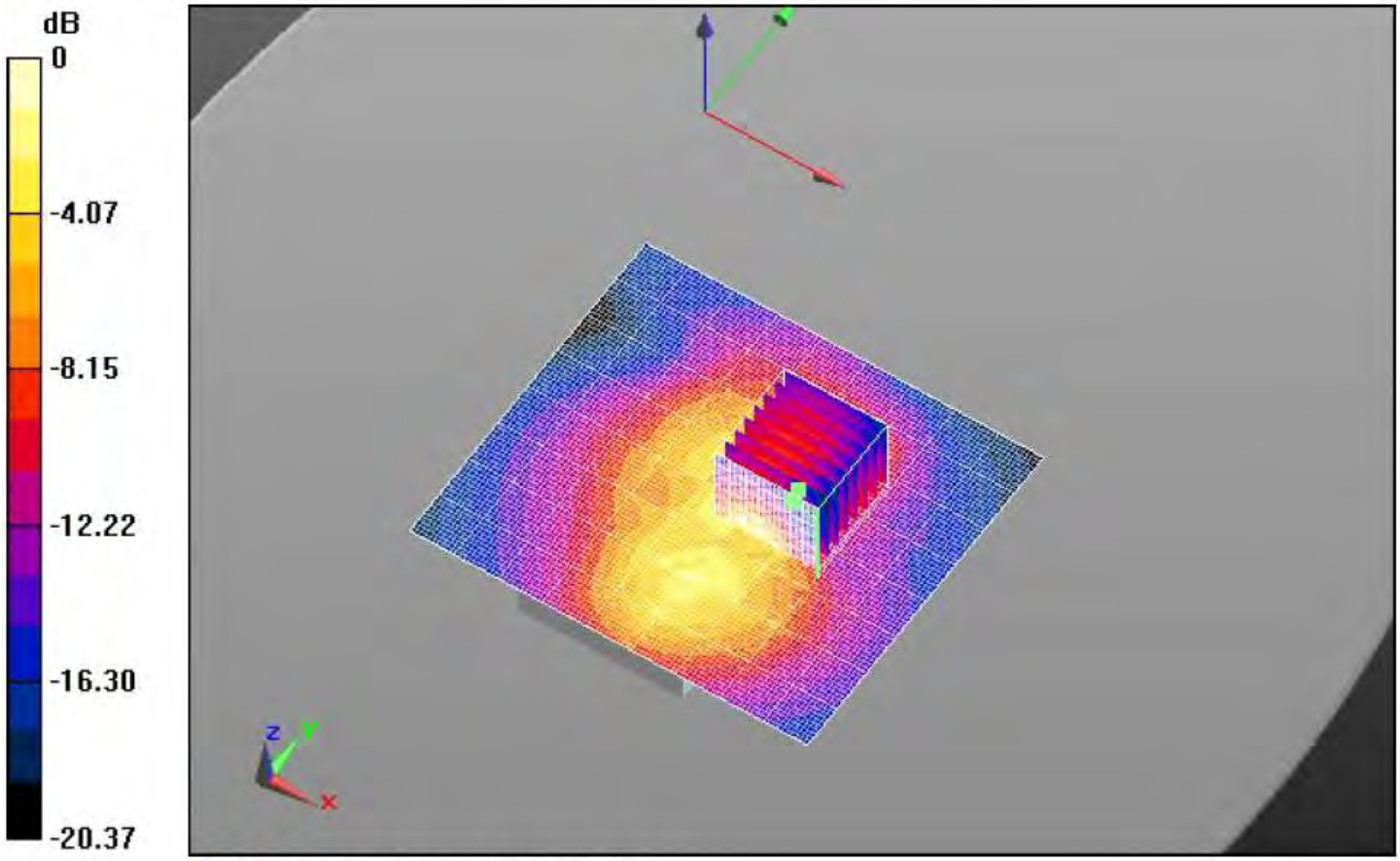

0 dB = 1.06 W/kg = 0.27 dBW/kg

11. LTE-2 Bottom 5mm

Date/Time: 11/22/2017 2:12:21 PM
Test Laboratory: Cetecom Inc. SAR 1 Lab
DUT: ID System; Type: EUT; Serial: Not Specified
Communication System: UID 10175 - CAB, LTE-FDD (SC-FDMA, 1 RB, 10 MHz, QPSK); Frequency: 1880 MHz
Medium: MSL1900_Batch 110615-4
Medium parameters used: f = 1880 MHz; σ = 1.559 S/m; εr = 50.871; ρ = 1000 kg/m3
Phantom section: Flat Section
Measurement Standard: DASY5 (IEEE/IEC/ANSI C63.19-2007)

Procedure Notes: Test Technician: Lynn Air Temperature: 22.5ãC Medium Temperature: 20.5ãC; Comments:

DASY Configuration:
I Probe: ES3DV3 - SN3323; ConvF(4.97, 4.97, 4.97); Calibrated: 5/12/2017;
I Sensor-Surface: 3mm (Mechanical Surface Detection), z = 2.0
I Electronics: DAE4 Sn1266; Calibrated: 5/16/2017
I Phantom: ELI v4.0_Front; Type: QDOVA001BB; Serial: TP:xxxx
I DASY52 52.8.8(1222);
Flat-Section/Bottom Side 0mm/Area Scan (91x81x1): Interpolated grid: dx=1.500 mm, dy=1.500 mm
Maximum value of SAR (interpolated) = 0.966 W/kg
Flat-Section/Bottom Side 0mm/Area Scan (10x9x1): Measurement grid: dx=15mm, dy=15mm
Maximum value of SAR (measured) = 0.784 W/kg
Flat-Section/Bottom Side 0mm/Zoom Scan (8x8x7)/Cube 0: Measurement grid: dx=5mm, dy=5mm, dz=5mm
Reference Value = 5.203 V/m; Power Drift = 0.03 dB
Peak SAR (extrapolated) = 1.30 W/kg
SAR(1 g) = 0.722 W/kg; SAR(10 g) = 0.399 W/kg
Maximum value of SAR (measured) = 0.898 W/kg
Flat-Section/Bottom Side 0mm/Zoom Scan (36x36x36)/Cube 0: Interpolated grid: dx=1.000 mm, dy=1.000 mm, dz=1.000 mm
Reference Value = 5.203 V/m; Power Drift = 0.03 dB
Penetration depth = 9.229 (8.603, 9.123) [mm]
Maximum value of SAR (interpolated) = 1.30 W/kg

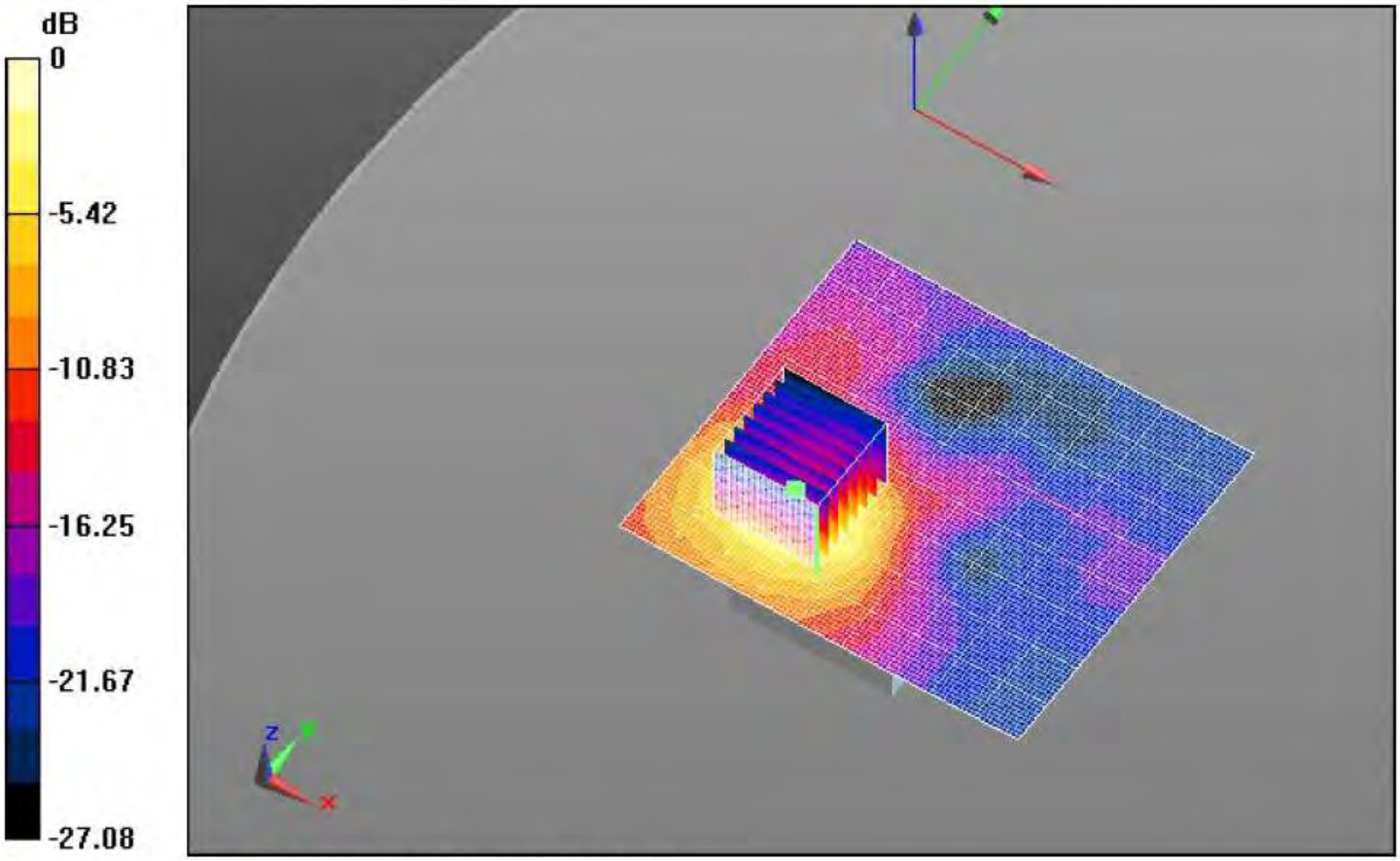

0 dB = 0.966 W/kg = -0.15 dBW/kg

12. LTE-2 Antenna 11mm

Date/Time: 11/22/2017 3:48:53 PM
Test Laboratory: Cetecom Inc. SAR 1 Lab
DUT: ID System; Type: EUT; Serial: Not Specified
Communication System: UID 10175 - CAB, LTE-FDD (SC-FDMA, 1 RB, 10 MHz, QPSK); Frequency: 1880 MHz
Medium: MSL1900_Batch 110615-4
Medium parameters used: f = 1880 MHz; σ = 1.559 S/m; εr = 50.871; ρ = 1000 kg/m3
Phantom section: Flat Section
Measurement Standard: DASY5 (IEEE/IEC/ANSI C63.19-2007)

Procedure Notes: Test Technician: Lynn/Joseph Air Temperature: 21.8ãC Medium Temperature: 20.5ãC; Comments:

DASY Configuration:
I Probe: ES3DV3 - SN3323; ConvF(4.97, 4.97, 4.97); Calibrated: 5/12/2017;
I Sensor-Surface: 3mm (Mechanical Surface Detection), z = 2.0
I Electronics: DAE4 Sn1266; Calibrated: 5/16/2017
I Phantom: ELI v4.0_Front; Type: QDOVA001BB; Serial: TP:xxxx
I DASY52 52.8.8(1222);
Flat-Section/Side 11mm/Area Scan (91x81x1): Interpolated grid: dx=1.500 mm, dy=1.500 mm
Maximum value of SAR (interpolated) = 1.38 W/kg
Flat-Section/Side 11mm/Area Scan (10x9x1): Measurement grid: dx=15mm, dy=15mm
Maximum value of SAR (measured) = 1.18 W/kg
Flat-Section/Side 11mm/Zoom Scan (8x8x7)/Cube 0: Measurement grid: dx=5mm, dy=5mm, dz=5mm
Reference Value = 16.05 V/m; Power Drift = -0.05 dB
Peak SAR (extrapolated) = 1.90 W/kg
SAR(1 g) = 1.1 W/kg; SAR(10 g) = 0.600 W/kg
Maximum value of SAR (measured) = 1.35 W/kg
Flat-Section/Side 11mm/Zoom Scan (36x36x36)/Cube 0: Interpolated grid: dx=1.000 mm, dy=1.000 mm, dz=1.000 mm
Reference Value = 16.05 V/m; Power Drift = -0.05 dB
Penetration depth = 9.686 (9.328, 9.639) [mm]
Maximum value of SAR (interpolated) = 1.90 W/kg

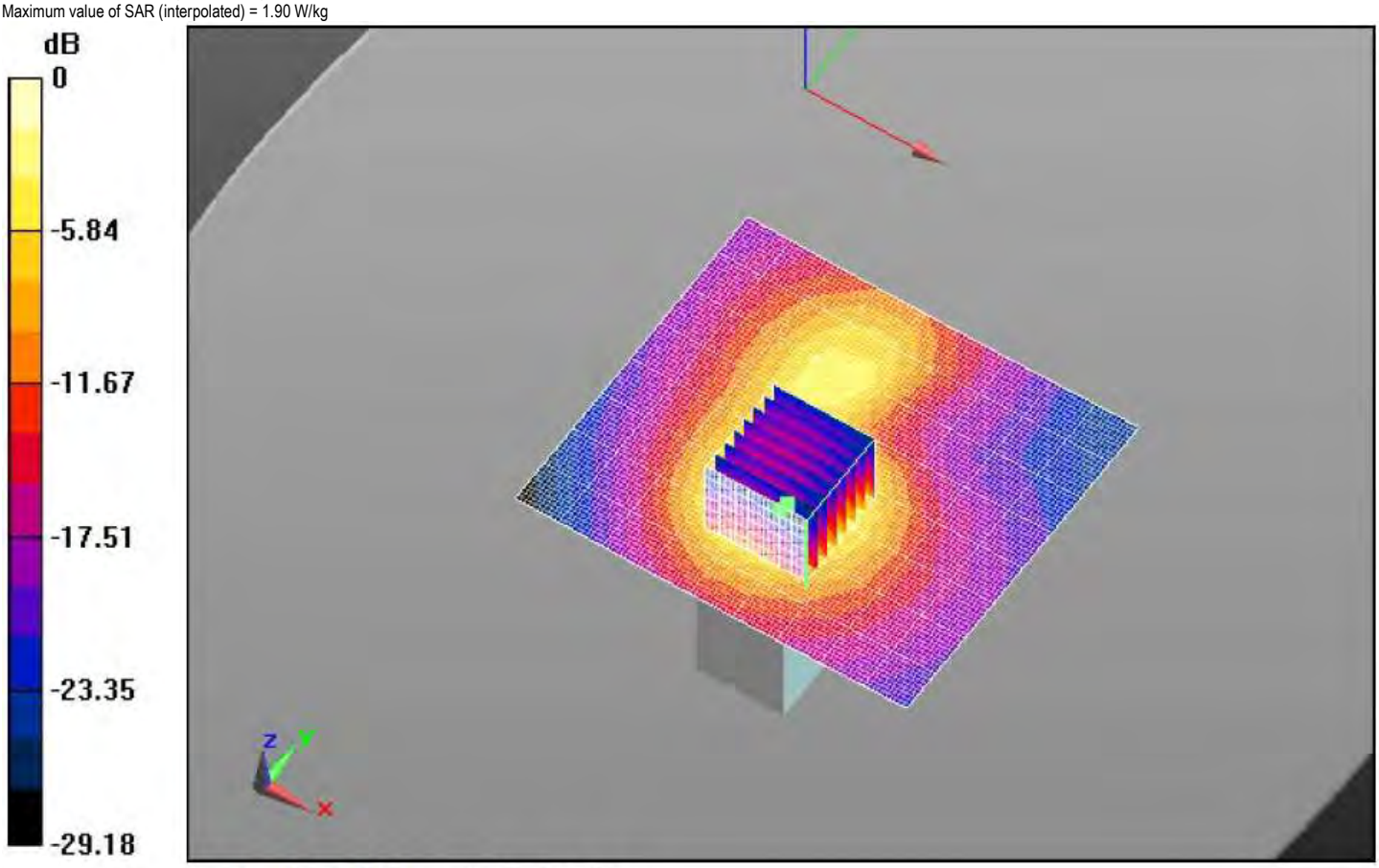

0 dB = 1.38 W/kg = 1.39 dBW/kg

13. LTE-2 Antenna 11mm repeat

Date/Time: 11/22/2017 4:20:10 PM
Test Laboratory: Cetecom Inc. SAR 1 Lab
DUT: ID System; Type: EUT; Serial: Not Specified
Communication System: UID 10175 - CAB, LTE-FDD (SC-FDMA, 1 RB, 10 MHz, QPSK); Frequency: 1880 MHz
Medium: MSL1900_Batch 110615-4
Medium parameters used: f = 1880 MHz; σ = 1.559 S/m; εr = 50.871; ρ = 1000 kg/m3
Phantom section: Flat Section
Measurement Standard: DASY5 (IEEE/IEC/ANSI C63.19-2007)

Procedure Notes: Test Technician: Lynn/Joseph Air Temperature: 21.8ãC Medium Temperature: 20.5ãC; Comments:

DASY Configuration:
I Probe: ES3DV3 - SN3323; ConvF(4.97, 4.97, 4.97); Calibrated: 5/12/2017;
I Sensor-Surface: 3mm (Mechanical Surface Detection), z = 2.0
I Electronics: DAE4 Sn1266; Calibrated: 5/16/2017
I Phantom: ELI v4.0_Front; Type: QDOVA001BB; Serial: TP:xxxx
I DASY52 52.8.8(1222);
Flat-Section/Side 11mm/Area Scan (91x81x1): Interpolated grid: dx=1.500 mm, dy=1.500 mm
Maximum value of SAR (interpolated) = 1.37 W/kg
Flat-Section/Side 11mm/Area Scan (10x9x1): Measurement grid: dx=15mm, dy=15mm
Maximum value of SAR (measured) = 1.17 W/kg
Flat-Section/Side 11mm/Zoom Scan (8x8x7)/Cube 0: Measurement grid: dx=5mm, dy=5mm, dz=5mm
Reference Value = 16.16 V/m; Power Drift = -0.01 dB
Peak SAR (extrapolated) = 1.87 W/kg
SAR(1 g) = 1.07 W/kg; SAR(10 g) = 0.583 W/kg
Maximum value of SAR (measured) = 1.32 W/kg
Flat-Section/Side 11mm/Zoom Scan (36x36x36)/Cube 0: Interpolated grid: dx=1.000 mm, dy=1.000 mm, dz=1.000 mm
Reference Value = 16.16 V/m; Power Drift = -0.01 dB
Penetration depth = 9.595 (9.174, 9.400) [mm]
Maximum value of SAR (interpolated) = 1.87 W/kg

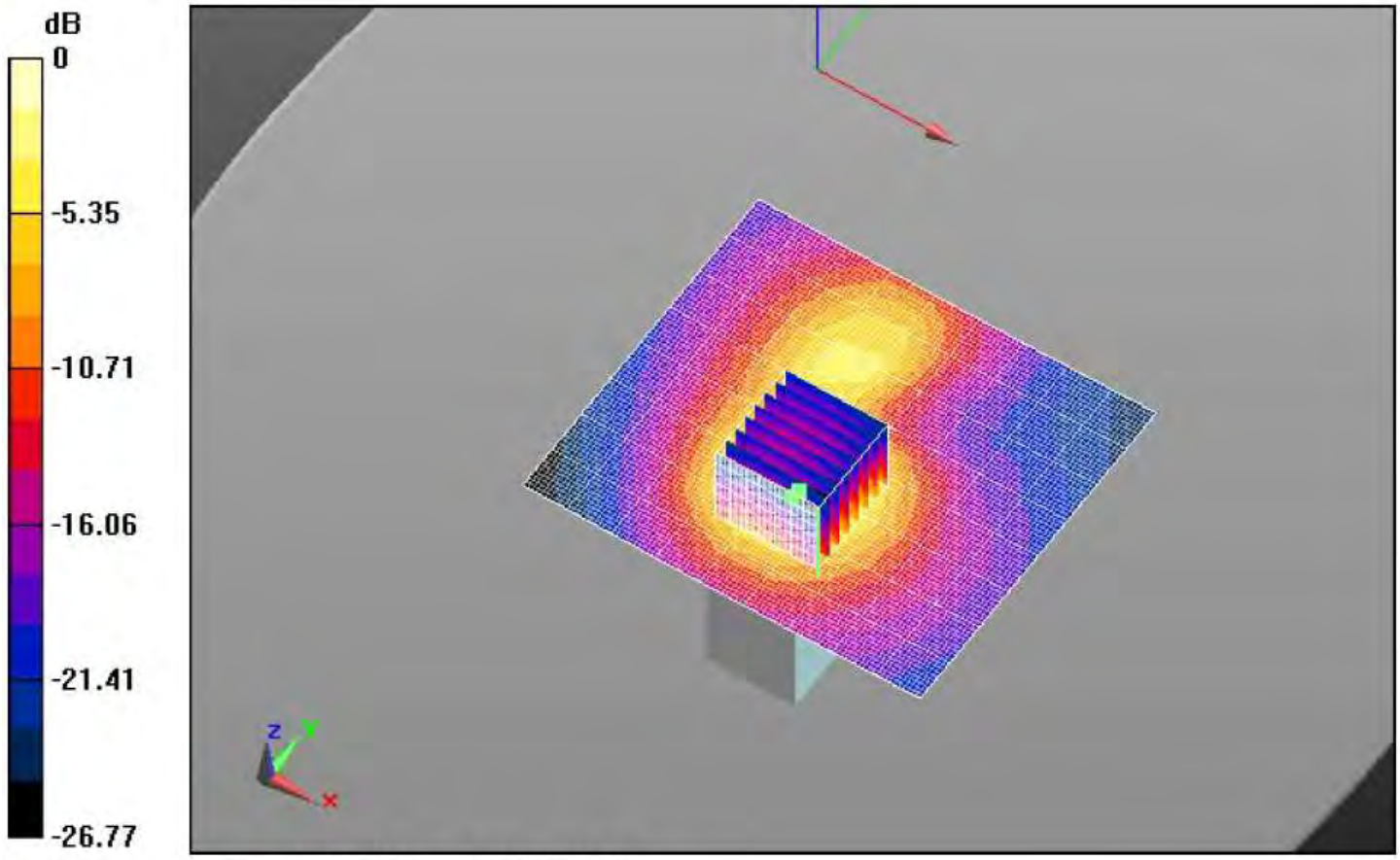

0 dB = 1.37 W/kg = 1.38 dBW/kg

14. LTE-4 Top 0mm

Date/Time: 11/21/2017 3:24:03 PM
Test Laboratory: Cetecom Inc. SAR 1 Lab
DUT: ID System; Type: EUT; Serial: Not Specified
Communication System: UID 10175 - CAB, LTE-FDD (SC-FDMA, 1 RB, 10 MHz, QPSK); Frequency: 1732.5 MHz
Medium: MSL1750_Batch 100824-2
Medium parameters used (interpolated): f = 1732.5 MHz; σ = 1.507 S/m; εr = 51.222; ρ = 1000 kg/m3
Phantom section: Flat Section
Measurement Standard: DASY5 (IEEE/IEC/ANSI C63.19-2007)
Procedure Notes: Test Technician: Lynn/Joseph Air Temperature: 22.0ãC Medium Temperature: 20.3ãC; Comments:
DASY Configuration:
I Probe: ES3DV3 - SN3323; ConvF(5.15, 5.15, 5.15); Calibrated: 5/12/2017;
I Sensor-Surface: 3mm (Mechanical Surface Detection), z = 2.0
I Electronics: DAE4 Sn1266; Calibrated: 5/16/2017
I Phantom: ELI v4.0_Front; Type: QDOVA001BB; Serial: TP:xxxx
I DASY52 52.8.8(1222);
Flat-Section/Front 0mm/Area Scan (10x9x1): Measurement grid: dx=15mm, dy=15mm
Maximum value of SAR (measured) = 0.529 W/kg
Flat-Section/Front 0mm/Area Scan (91x81x1): Interpolated grid: dx=1.500 mm, dy=1.500 mm
Maximum value of SAR (interpolated) = 0.555 W/kg
Flat-Section/Front 0mm/Zoom Scan (8x8x7)/Cube 0: Measurement grid: dx=5mm, dy=5mm, dz=5mm
Reference Value = 18.68 V/m; Power Drift = -0.08 dB
Peak SAR (extrapolated) = 0.679 W/kg
SAR(1 g) = 0.443 W/kg; SAR(10 g) = 0.284 W/kg
Maximum value of SAR (measured) = 0.520 W/kg
Flat-Section/Front 0mm/Zoom Scan (36x36x36)/Cube 0: Interpolated grid: dx=1.000 mm, dy=1.000 mm, dz=1.000 mm
Reference Value = 18.68 V/m; Power Drift = -0.08 dB
Penetration depth = 11.38 (11.43, 11.41) [mm]
Maximum value of SAR (interpolated) = 0.679 W/kg
Flat-Section/Front 0mm/Zoom Scan (8x8x7)/Cube 0: Measurement grid: dx=5mm, dy=5mm, dz=5mm
Reference Value = 18.68 V/m; Power Drift = -0.08 dB

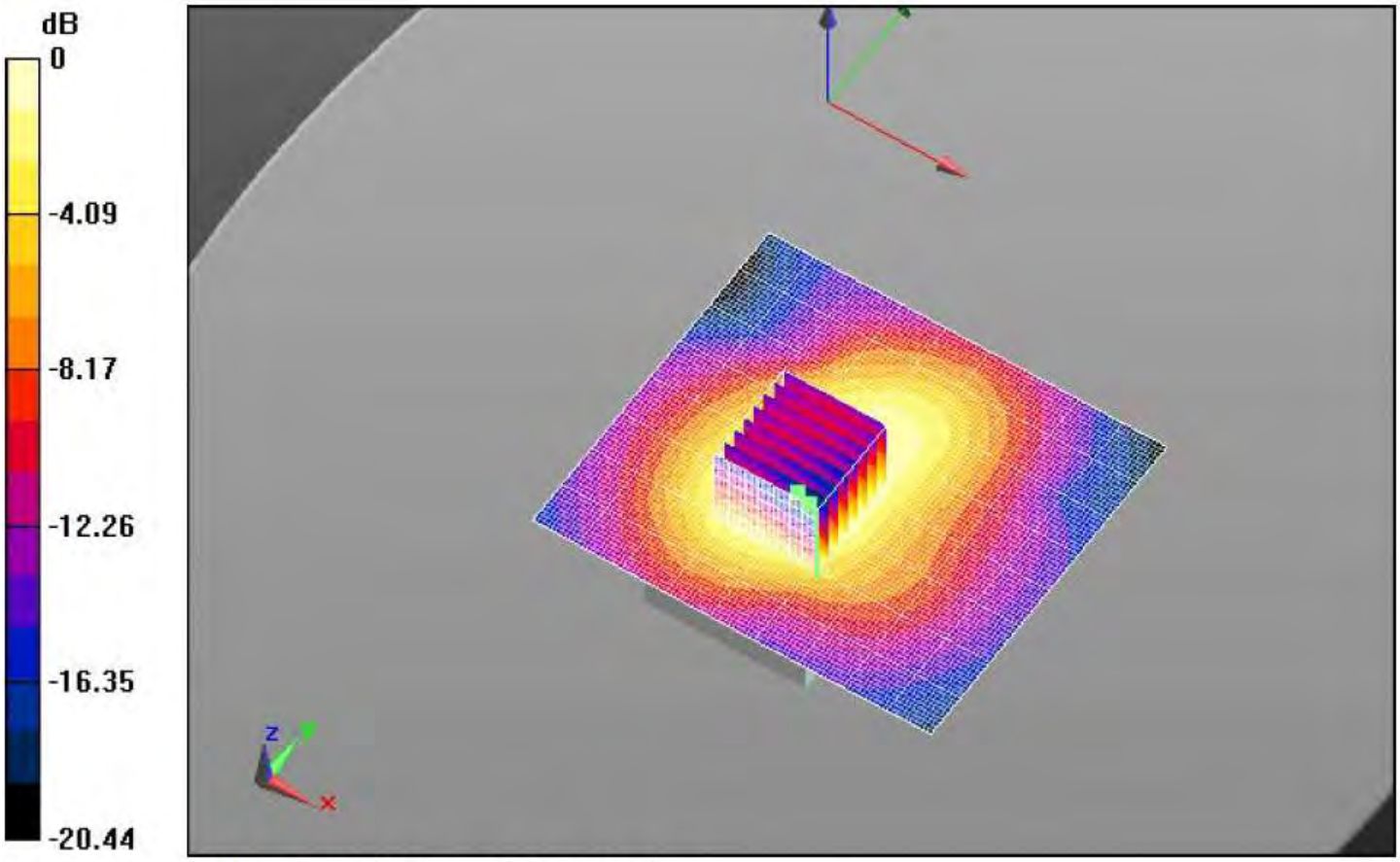

0 dB = 0.529 W/kg = -2.77 dBW/kg

15. LTE-4 Bottom 0mm

Date/Time: 11/21/2017 3:54:50 PM
Test Laboratory: Cetecom Inc. SAR 1 Lab
DUT: ID System; Type: EUT; Serial: Not Specified
Communication System: UID 10175 - CAB, LTE-FDD (SC-FDMA, 1 RB, 10 MHz, QPSK); Frequency: 1732.5 MHz
Medium: MSL1750_Batch 100824-2
Medium parameters used (interpolated): f = 1732.5 MHz; σ = 1.507 S/m; εr = 51.222; ρ = 1000 kg/m3
Phantom section: Flat Section
Measurement Standard: DASY5 (IEEE/IEC/ANSI C63.19-2007)

Procedure Notes: Test Technician: Lynn/Joseph Air Temperature: 21.6ãC Medium Temperature: 20.3ãC; Comments:

DASY Configuration:
I Probe: ES3DV3 - SN3323; ConvF(5.15, 5.15, 5.15); Calibrated: 5/12/2017;
I Sensor-Surface: 3mm (Mechanical Surface Detection), z = 2.0
I Electronics: DAE4 Sn1266; Calibrated: 5/16/2017
I Phantom: ELI v4.0_Front; Type: QDOVA001BB; Serial: TP:xxxx
I DASY52 52.8.8(1222);
Flat-Section/Bottomside 0mm/Area Scan (91x81x1): Interpolated grid: dx=1.500 mm, dy=1.500 mm
Maximum value of SAR (interpolated) = 1.33 W/kg
Flat-Section/Bottomside 0mm/Area Scan (10x9x1): Measurement grid: dx=15mm, dy=15mm
Maximum value of SAR (measured) = 1.11 W/kg
Flat-Section/Bottomside 0mm/Zoom Scan (9x9x7)/Cube 0: Measurement grid: dx=5mm, dy=5mm, dz=5mm
Reference Value = 24.35 V/m; Power Drift = -0.01 dB
Peak SAR (extrapolated) = 1.47 W/kg
SAR(1 g) = 0.965 W/kg; SAR(10 g) = 0.609 W/kg
Maximum value of SAR (measured) = 1.19 W/kg
Flat-Section/Bottomside 0mm/Zoom Scan (41x41x36)/Cube 0: Interpolated grid: dx=1.000 mm, dy=1.000 mm, dz=1.000 mm
Reference Value = 24.35 V/m; Power Drift = -0.01 dB
Penetration depth = 11.38 (12.11, 13.03) [mm]
Maximum value of SAR (interpolated) = 1.47 W/kg
Flat-Section/Bottomside 0mm/Zoom Scan (9x9x7)/Cube 0: Measurement grid: dx=5mm, dy=5mm, dz=5mm
Reference Value = 24.35 V/m; Power Drift = -0.01 dB

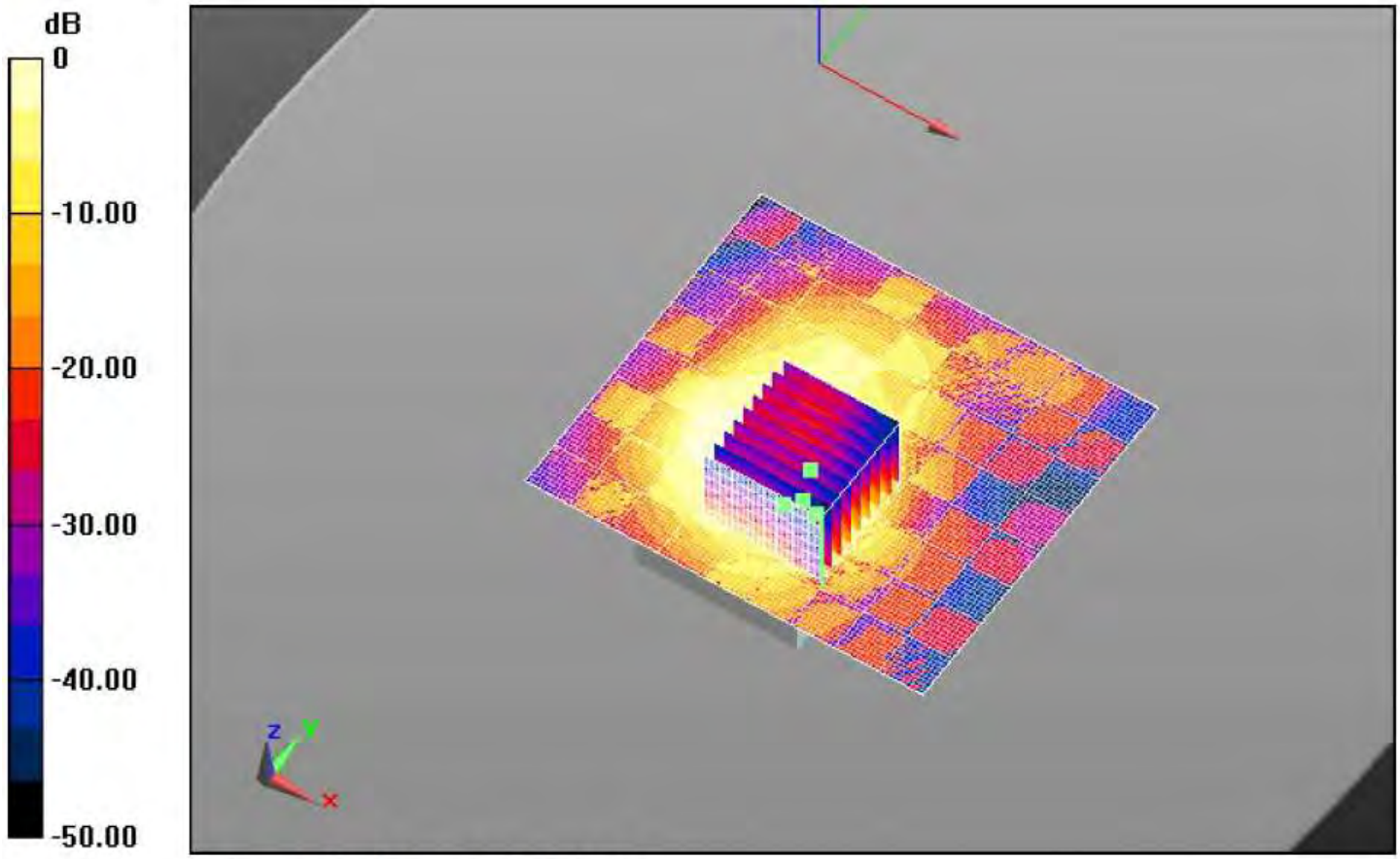

0 dB = 1.33 W/kg = 1.24 dBW/kg

16. LTE-4 Bottom 0mm repeat

Date/Time: 11/21/2017 4:26:19 PM
Test Laboratory: Cetecom Inc. SAR 1 Lab
DUT: ID System; Type: EUT; Serial: Not Specified
Communication System: UID 10175 - CAB, LTE-FDD (SC-FDMA, 1 RB, 10 MHz, QPSK); Frequency: 1732.5 MHz
Medium: MSL1750_Batch 100824-2
Medium parameters used (interpolated): f = 1732.5 MHz; σ = 1.507 S/m; εr = 51.222; ρ = 1000 kg/m3
Phantom section: Flat Section
Measurement Standard: DASY5 (IEEE/IEC/ANSI C63.19-2007)

Procedure Notes: Test Technician: Lynn/Joseph Air Temperature: 21.6ãC Medium Temperature: 20.3ãC; Comments:

DASY Configuration:
I Probe: ES3DV3 - SN3323; ConvF(5.15, 5.15, 5.15); Calibrated: 5/12/2017;
I Sensor-Surface: 3mm (Mechanical Surface Detection), z = 2.0
I Electronics: DAE4 Sn1266; Calibrated: 5/16/2017
I Phantom: ELI v4.0_Front; Type: QDOVA001BB; Serial: TP:xxxx
I DASY52 52.8.8(1222);
Flat-Section/Bottom Side 0mm/Area Scan (91x81x1): Interpolated grid: dx=1.500 mm, dy=1.500 mm
Maximum value of SAR (interpolated) = 1.36 W/kg
Flat-Section/Bottom Side 0mm/Area Scan (10x9x1): Measurement grid: dx=15mm, dy=15mm
Maximum value of SAR (measured) = 1.12 W/kg
Flat-Section/Bottom Side 0mm/Zoom Scan (9x9x7)/Cube 0: Measurement grid: dx=5mm, dy=5mm, dz=5mm
Reference Value = 24.48 V/m; Power Drift = -0.07 dB
Peak SAR (extrapolated) = 1.57 W/kg
SAR(1 g) = 1.04 W/kg; SAR(10 g) = 0.637 W/kg
Maximum value of SAR (measured) = 1.23 W/kg
Flat-Section/Bottom Side 0mm/Zoom Scan (41x41x36)/Cube 0: Interpolated grid: dx=1.000 mm, dy=1.000 mm, dz=1.000 mm
Reference Value = 24.48 V/m; Power Drift = -0.07 dB
Penetration depth = 12.05 (12.66, 11.50) [mm]
Maximum value of SAR (interpolated) = 1.57 W/kg
Flat-Section/Bottom Side 0mm/Zoom Scan (9x9x7)/Cube 0: Measurement grid: dx=5mm, dy=5mm, dz=5mm
Reference Value = 24.48 V/m; Power Drift = -0.07 dB

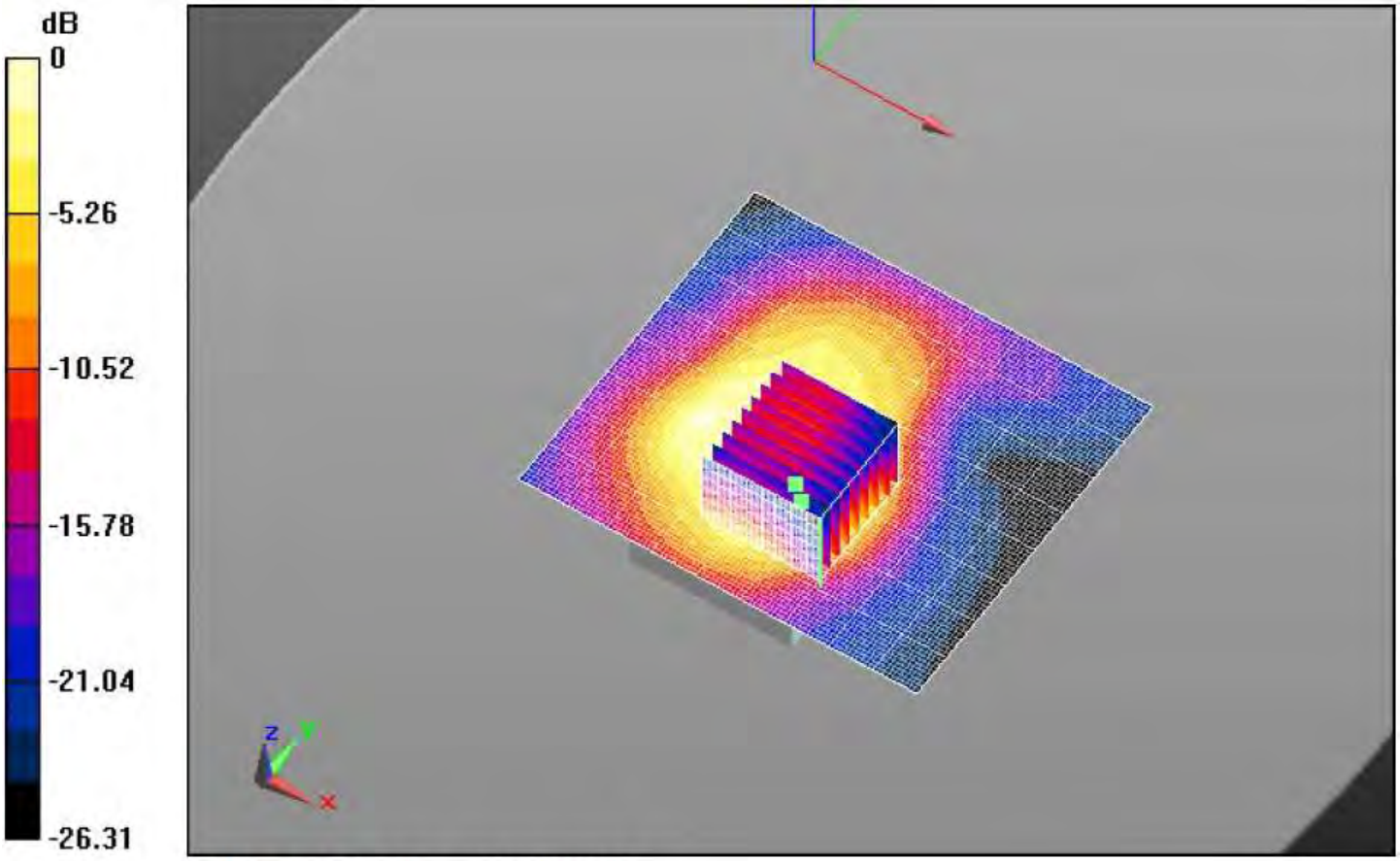

0 dB = 1.36 W/kg = 1.33 dBW/kg

17. LTE-4 Antenna 0mm

Date/Time: 11/21/2017 5:04:11 PM
Test Laboratory: Cetecom Inc. SAR 1 Lab
DUT: ID System; Type: EUT; Serial: Not Specified
Communication System: UID 10175 - CAB, LTE-FDD (SC-FDMA, 1 RB, 10 MHz, QPSK); Frequency: 1732.5 MHz
Medium: MSL1750_Batch 100824-2
Medium parameters used (interpolated): f = 1732.5 MHz; σ = 1.507 S/m; εr = 51.222; ρ = 1000 kg/m3
Phantom section: Flat Section
Measurement Standard: DASY5 (IEEE/IEC/ANSI C63.19-2007)

Procedure Notes: Test Technician: Lynn Air Temperature: 23.1°C Medium Temperature: 20.7°C; Comments:

DASY Configuration:
I Probe: ES3DV3 - SN3323; ConvF(5.15, 5.15, 5.15); Calibrated: 5/12/2017;
I Sensor-Surface: 3mm (Mechanical Surface Detection), z = 2.0
I Electronics: DAE4 Sn1266; Calibrated: 5/16/2017
I Phantom: ELI v4.0_Front; Type: QDOVA001BB; Serial: TP:xxxx
I DASY52 52.8.8(1222);
Flat-Section/Side 0mm/Area Scan (91x81x1): Interpolated grid: dx=1.500 mm, dy=1.500 mm
Maximum value of SAR (interpolated) = 1.40 W/kg
Flat-Section/Side 0mm/Area Scan (10x9x1): Measurement grid: dx=15mm, dy=15mm
Maximum value of SAR (measured) = 1.19 W/kg
Flat-Section/Sink Side 0mm/Zoom Scan (8x8x7)/Cube 0: Measurement grid: dx=5mm, dy=5mm, dz=5mm
Reference Value = 11.06 V/m; Power Drift = -0.04 dB
Peak SAR (extrapolated) = 2.17 W/kg
SAR(1 g) = 1.06 W/kg; SAR(10 g) = 0.497 W/kg
Maximum value of SAR (measured) = 1.40 W/kg
Flat-Section/Side 0mm/Zoom Scan (36x36x36)/Cube 0: Interpolated grid: dx=1.000 mm, dy=1.000 mm, dz=1.000 mm
Reference Value = 11.06 V/m; Power Drift = -0.04 dB
Penetration depth = 8.477 (7.665, 8.739) [mm]
Maximum value of SAR (interpolated) = 2.17 W/kg
Flat-Section/Side 0mm/Zoom Scan (8x8x7)/Cube 0: Measurement grid: dx=5mm, dy=5mm, dz=5mm
Reference Value = 11.06 V/m; Power Drift = -0.04 dB

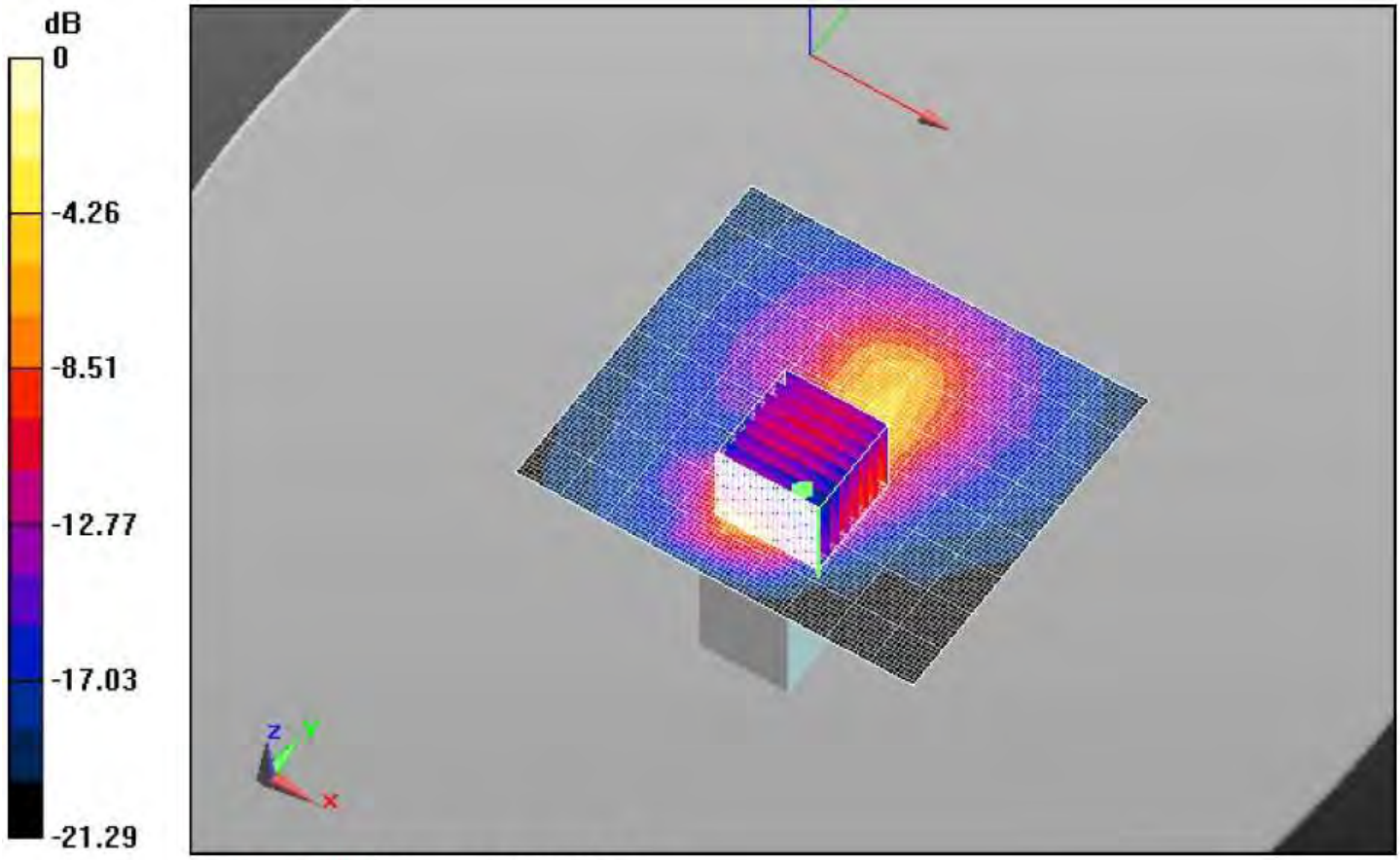

0 dB = 1.40 W/kg = 1.45 dBW/kg

18. LTE-4 Antenna 0mm repeat

Date/Time: 11/21/2017 5:35:36 PM
Test Laboratory: Cetecom Inc. SAR 1 Lab
DUT: ID System; Type: EUT; Serial: Not Specified
Communication System: UID 10175 - CAB, LTE-FDD (SC-FDMA, 1 RB, 10 MHz, QPSK); Frequency: 1732.5 MHz
Medium: MSL1750_Batch 100824-2
Medium parameters used (interpolated): f = 1732.5 MHz; σ = 1.507 S/m; εr = 51.222; ρ = 1000 kg/m3
Phantom section: Flat Section
Measurement Standard: DASY5 (IEEE/IEC/ANSI C63.19-2007)

Procedure Notes: Test Technician: Lynn Air Temperature: 23.1°C Medium Temperature: 20.7°C; Comments:

DASY Configuration:
I Probe: ES3DV3 - SN3323; ConvF(5.15, 5.15, 5.15); Calibrated: 5/12/2017;
I Sensor-Surface: 3mm (Mechanical Surface Detection), z = 2.0
I Electronics: DAE4 Sn1266; Calibrated: 5/16/2017
I Phantom: ELI v4.0_Front; Type: QDOVA001BB; Serial: TP:xxxx
I DASY52 52.8.8(1222);
Flat-Section/Side 0mm/Area Scan (91x81x1): Interpolated grid: dx=1.500 mm, dy=1.500 mm
Maximum value of SAR (interpolated) = 1.49 W/kg
Flat-Section/Side 0mm/Area Scan (10x9x1): Measurement grid: dx=15mm, dy=15mm
Maximum value of SAR (measured) = 1.22 W/kg
Flat-Section/Side 0mm/Zoom Scan (8x9x7)/Cube 0: Measurement grid: dx=5mm, dy=5mm, dz=5mm
Reference Value = 11.43 V/m; Power Drift = -0.42 dB
Peak SAR (extrapolated) = 2.21 W/kg
SAR(1 g) = 1.09 W/kg; SAR(10 g) = 0.511 W/kg
Maximum value of SAR (measured) = 1.43 W/kg
Flat-Section/Side 0mm/Zoom Scan (36x41x36)/Cube 0: Interpolated grid: dx=1.000 mm, dy=1.000 mm, dz=1.000 mm
Reference Value = 11.43 V/m; Power Drift = -0.42 dB
Penetration depth = 8.190 (7.432, 8.339) [mm]
Maximum value of SAR (interpolated) = 2.21 W/kg
Flat-Section/Side 0mm/Zoom Scan (8x9x7)/Cube 0: Measurement grid: dx=5mm, dy=5mm, dz=5mm
Reference Value = 11.43 V/m; Power Drift = -0.42 dB

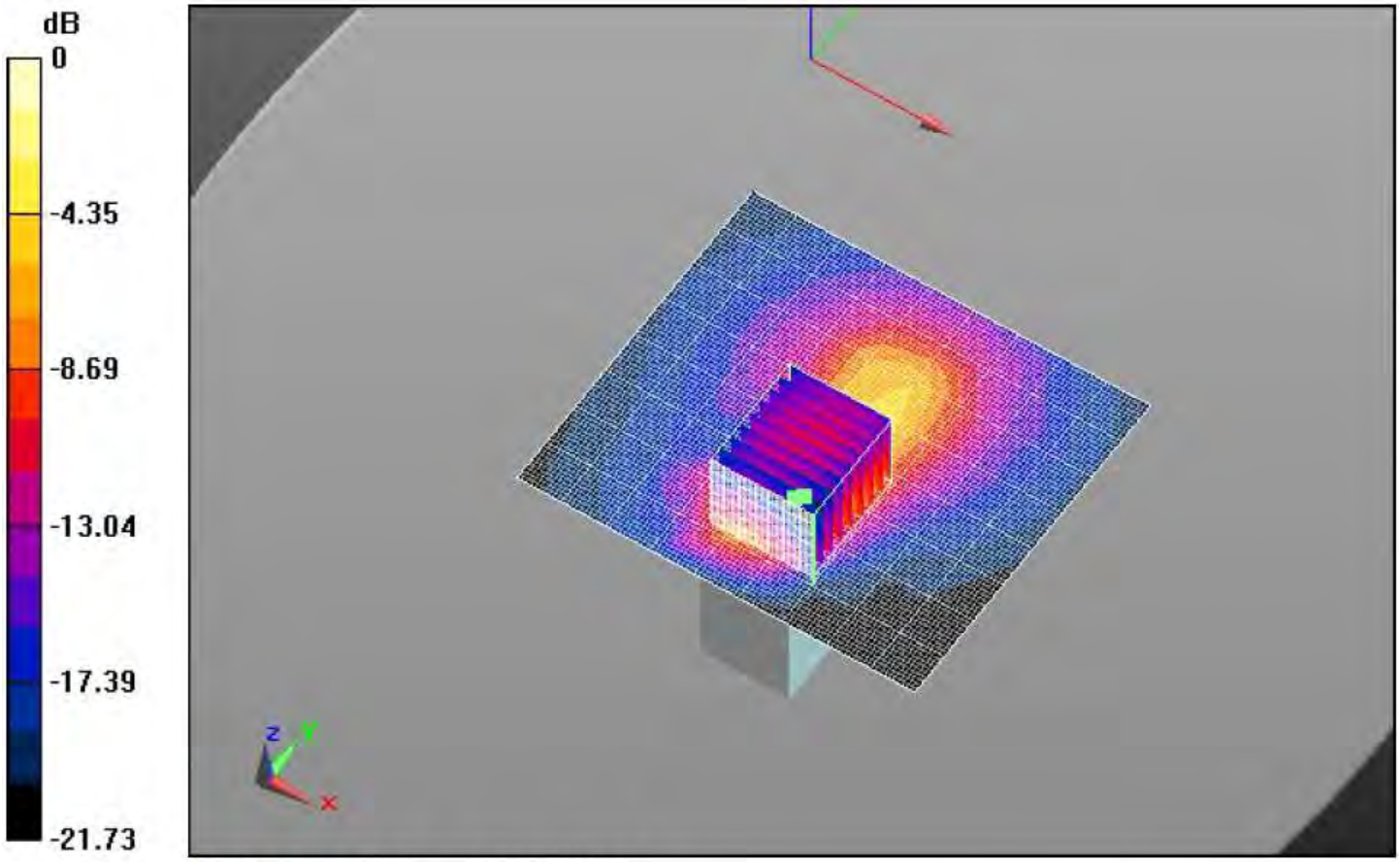

0 dB = 1.49 W/kg = 1.73 dBW/kg

19. LTE-5 Top 0mm

Date/Time: 11/20/2017 5:43:28 PM
Test Laboratory: Cetecom Inc. SAR 1 Lab
DUT: ID System; Type: EUT; Serial: Not Specified
Communication System: UID 10175 - CAB, LTE-FDD (SC-FDMA, 1 RB, 10 MHz, QPSK); Frequency: 836.5 MHz
Medium: MSL900_Batch 110518-7
Medium parameters used (interpolated): f = 836.5 MHz; σ = 1.002 S/m; εr = 53.848; ρ = 1000 kg/m3
Phantom section: Flat Section
Measurement Standard: DASY5 (IEEE/IEC/ANSI C63.19-2007)

Procedure Notes: Test Technician: Lynn Air Temperature: 23.1°C Medium Temperature: 20.7°C; Comments:

DASY Configuration:
I Probe: ES3DV3 - SN3323; ConvF(6.38, 6.38, 6.38); Calibrated: 5/12/2017;
I Sensor-Surface: 3mm (Mechanical Surface Detection), z = 2.0
I Electronics: DAE4 Sn1266; Calibrated: 5/16/2017
I Phantom: ELI v4.0_Front; Type: QDOVA001BB; Serial: TP:xxxx
I DASY52 52.8.8(1222);
Flat-Section/Front 0mm/Area Scan (81x81x1): Interpolated grid: dx=1.500 mm, dy=1.500 mm
Info: Interpolated medium parameters used for SAR evaluation.
Maximum value of SAR (interpolated) = 0.0793 W/kg
Flat-Section/Front 0mm/Zoom Scan (8x8x7)/Cube 0: Measurement grid: dx=5mm, dy=5mm, dz=5mm
Reference Value = 4.133 V/m; Power Drift = 0.55 dB
Peak SAR (extrapolated) = 0.109 W/kg
SAR(1 g) = 0.064 W/kg; SAR(10 g) = 0.038 W/kg
Info: Interpolated medium parameters used for SAR evaluation.
Maximum value of SAR (measured) = 0.0788 W/kg
Flat-Section/Front 0mm/Zoom Scan (8x8x7)/Cube 0: Measurement grid: dx=5mm, dy=5mm, dz=5mm
Reference Value = 4.133 V/m; Power Drift = 0.55 dB
Info: Interpolated medium parameters used for SAR evaluation.

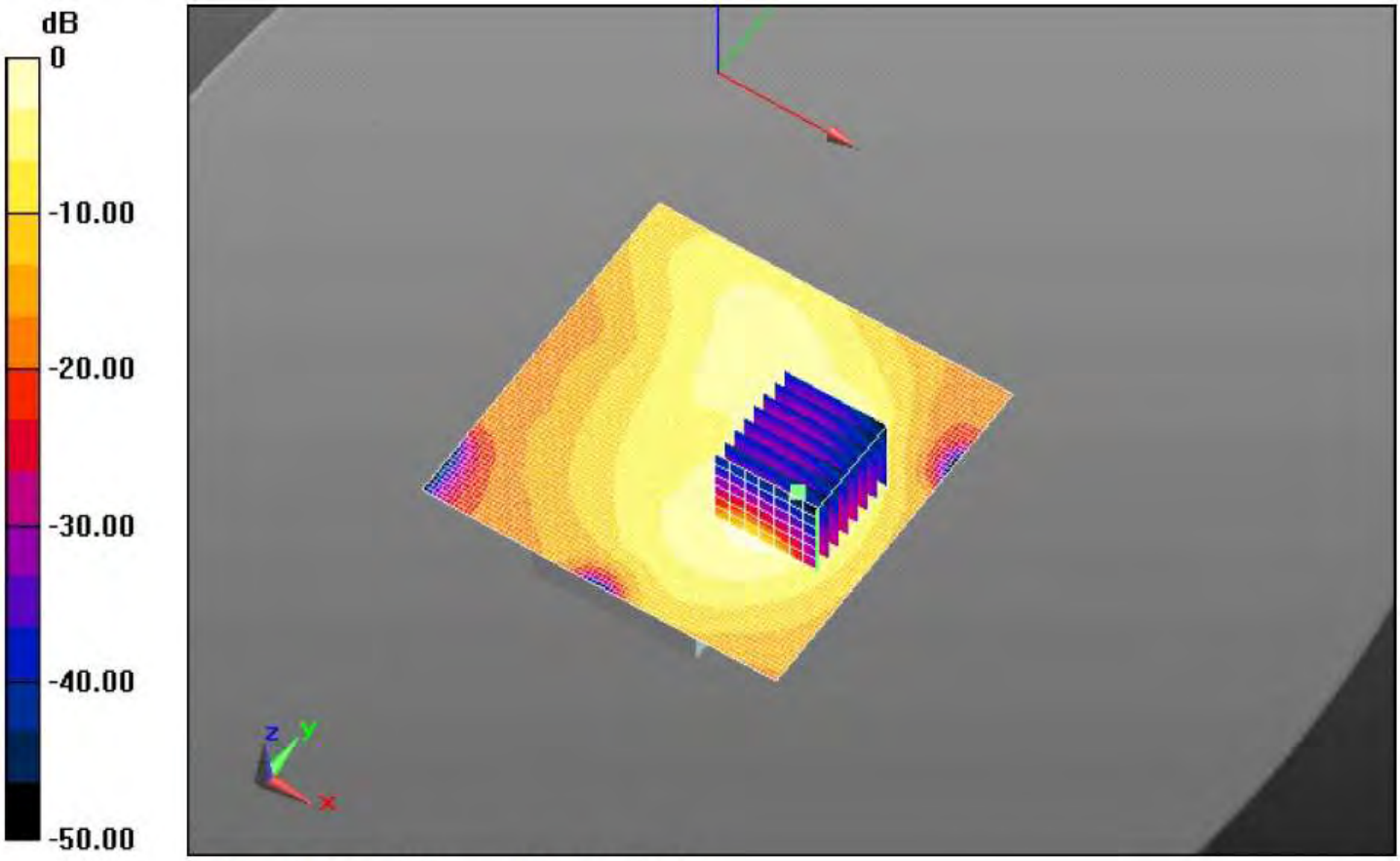

0 dB = 0.0793 W/kg = -11.01 dBW/kg

20. LTE-5 Bottom 0mm

Date/Time: 11/20/2017 7:51:43 PM
Test Laboratory: Cetecom Inc. SAR 1 Lab
DUT: ID System; Type: EUT; Serial: Not Specified
Communication System: UID 10175 - CAB, LTE-FDD (SC-FDMA, 1 RB, 10 MHz, QPSK); Frequency: 836.5 MHz
Medium: MSL900_Batch 110518-7
Medium parameters used (interpolated): f = 836.5 MHz; σ = 1.002 S/m; εr = 53.848; ρ = 1000 kg/m3
Phantom section: Flat Section
Measurement Standard: DASY5 (IEEE/IEC/ANSI C63.19-2007)

Procedure Notes: Test Technician: Lynn Air Temperature: 23.1°C Medium Temperature: 20.7°C; Comments:

DASY Configuration:
I Probe: ES3DV3 - SN3323; ConvF(6.38, 6.38, 6.38); Calibrated: 5/12/2017;
I Sensor-Surface: 3mm (Mechanical Surface Detection), z = 2.0
I Electronics: DAE4 Sn1266; Calibrated: 5/16/2017
I Phantom: ELI v4.0_Front; Type: QDOVA001BB; Serial: TP:xxxx
I DASY52 52.8.8(1222);
Flat-Section/Front 0mm/Area Scan (91x81x1): Interpolated grid: dx=1.500 mm, dy=1.500 mm
Maximum value of SAR (interpolated) = 0.754 W/kg
Flat-Section/Front 0mm/Area Scan (10x9x1): Measurement grid: dx=15mm, dy=15mm
Maximum value of SAR (measured) = 0.660 W/kg
Flat-Section/Front 0mm/Zoom Scan (8x8x7)/Cube 0: Measurement grid: dx=5mm, dy=5mm, dz=5mm
Reference Value = 15.48 V/m; Power Drift = 0.01 dB
Peak SAR (extrapolated) = 1.07 W/kg
SAR(1 g) = 0.629 W/kg; SAR(10 g) = 0.374 W/kg
Maximum value of SAR (measured) = 0.770 W/kg
Flat-Section/Front 0mm/Zoom Scan (36x36x36)/Cube 0: Interpolated grid: dx=1.000 mm, dy=1.000 mm, dz=1.000 mm
Reference Value = 15.48 V/m; Power Drift = 0.01 dB
Penetration depth = 10.85 (9.652, 12.23) [mm]
Maximum value of SAR (interpolated) = 1.07 W/kg
Flat-Section/Front 0mm/Zoom Scan (8x8x7)/Cube 0: Measurement grid: dx=5mm, dy=5mm, dz=5mm
Reference Value = 15.48 V/m; Power Drift = 0.01 dB

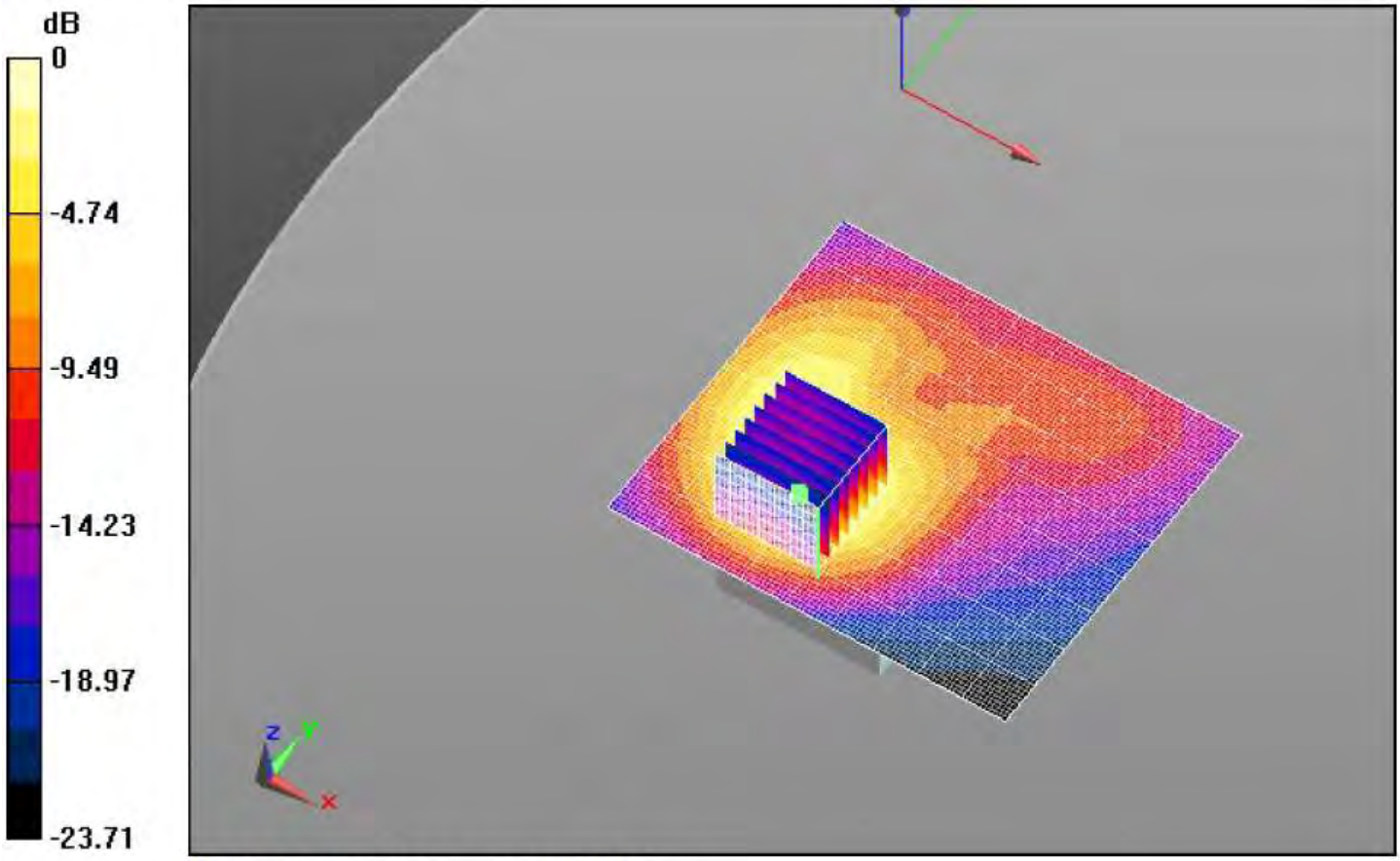

0 dB = 0.754 W/kg = -1.23 dBW/kg

21. LTE-5 Antenna 0mm

Date/Time: 11/20/2017 7:22:04 PM
Test Laboratory: Cetecom Inc. SAR 1 Lab
DUT: ID System; Type: EUT; Serial: Not Specified
Communication System: UID 10175 - CAB, LTE-FDD (SC-FDMA, 1 RB, 10 MHz, QPSK); Frequency: 836.5 MHz
Medium: MSL900_Batch 110518-7
Medium parameters used (interpolated): f = 836.5 MHz; σ = 1.002 S/m; εr = 53.848; ρ = 1000 kg/m3
Phantom section: Flat Section
Measurement Standard: DASY5 (IEEE/IEC/ANSI C63.19-2007)

Procedure Notes: Test Technician: Lynn Air Temperature: 23.1°C Medium Temperature: 20.7°C; Comments:

DASY Configuration:
I Probe: ES3DV3 - SN3323; ConvF(6.38, 6.38, 6.38); Calibrated: 5/12/2017;
I Sensor-Surface: 3mm (Mechanical Surface Detection), z = 2.0
I Electronics: DAE4 Sn1266; Calibrated: 5/16/2017
I Phantom: ELI v4.0_Front; Type: QDOVA001BB; Serial: TP:xxxx
I DASY52 52.8.8(1222);
Flat-Section/Front 0mm/Area Scan (91x81x1): Interpolated grid: dx=1.500 mm, dy=1.500 mm
Maximum value of SAR (interpolated) = 1.02 W/kg
Flat-Section/Front 0mm/Area Scan (10x9x1): Measurement grid: dx=15mm, dy=15mm
Maximum value of SAR (measured) = 0.890 W/kg
Flat-Section/Front 0mm/Zoom Scan (8x8x7)/Cube 0: Measurement grid: dx=5mm, dy=5mm, dz=5mm
Reference Value = 29.76 V/m; Power Drift = 0.08 dB
Peak SAR (extrapolated) = 1.54 W/kg
SAR(1 g) = 0.848 W/kg; SAR(10 g) = 0.459 W/kg
Maximum value of SAR (measured) = 1.06 W/kg
Flat-Section/Front 0mm/Zoom Scan (36x36x36)/Cube 0: Interpolated grid: dx=1.000 mm, dy=1.000 mm, dz=1.000 mm
Reference Value = 29.76 V/m; Power Drift = 0.08 dB
Penetration depth = 9.943 (8.733, 11.23) [mm]
Maximum value of SAR (interpolated) = 1.54 W/kg
Flat-Section/Front 0mm/Zoom Scan (8x8x7)/Cube 0: Measurement grid: dx=5mm, dy=5mm, dz=5mm
Reference Value = 29.76 V/m; Power Drift = 0.08 dB

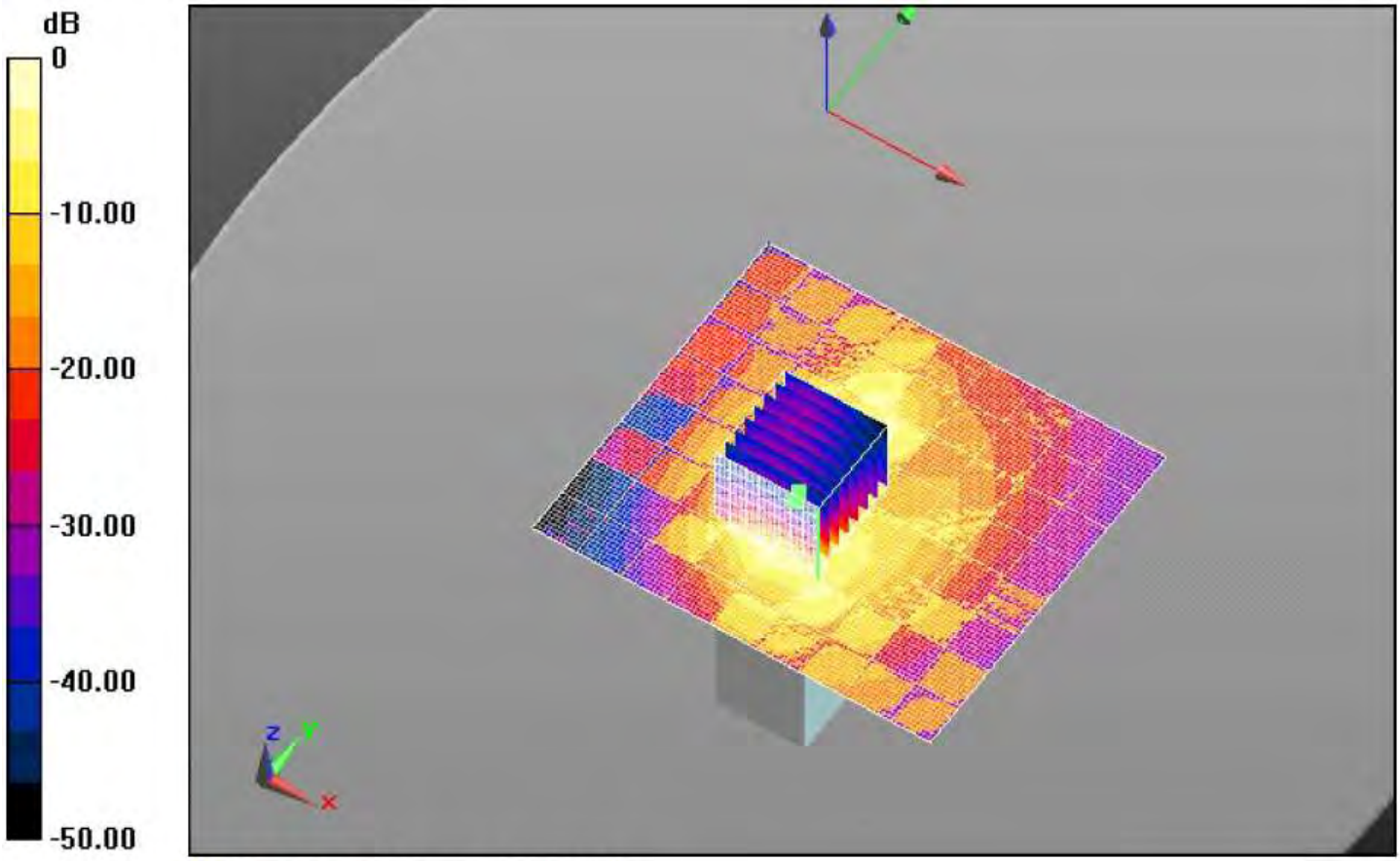

0 dB = 1.02 W/kg = 0.10 dBW/kg

22. LTE-12 Top 0mm

Date/Time: 11/22/2017 6:48:29 PM
Test Laboratory: Cetecom Inc. SAR 1 Lab
DUT: ID System; Type: EUT; Serial: Not Specified
Communication System: UID 10175 - CAB, LTE-FDD (SC-FDMA, 1 RB, 10 MHz, QPSK); Frequency: 707.5 MHz
Medium: MSL750_Batch 110526-1
Medium parameters used (interpolated): f = 707.5 MHz; σ = 0.91 S/m; εr = 55.431; ρ = 1000 kg/m3
Phantom section: Flat Section
Measurement Standard: DASY5 (IEEE/IEC/ANSI C63.19-2007)

Procedure Notes: Test Technician: Lynn/Joseph Air Temperature: 21.2ãC Medium Temperature: 19.1ãC; Comments:

DASY Configuration:
I Probe: ES3DV3 - SN3323; ConvF(6.49, 6.49, 6.49); Calibrated: 5/12/2017;
I Sensor-Surface: 3mm (Mechanical Surface Detection), z = 2.0
I Electronics: DAE4 Sn1266; Calibrated: 5/16/2017
I Phantom: ELI 4.0; Type: QDOVA001BA; Serial: 1092
I DASY52 52.8.8(1222);
Flat-Section/Front 0mm/Area Scan (91x81x1): Interpolated grid: dx=1.500 mm, dy=1.500 mm
Maximum value of SAR (interpolated) = 0.586 W/kg
Flat-Section/Front 0mm/Area Scan (10x9x1): Measurement grid: dx=15mm, dy=15mm
Maximum value of SAR (measured) = 0.536 W/kg
Flat-Section/Front 0mm/Zoom Scan (8x8x7)/Cube 0: Measurement grid: dx=5mm, dy=5mm, dz=5mm
Reference Value = 18.21 V/m; Power Drift = -0.21 dB
Peak SAR (extrapolated) = 0.917 W/kg
SAR(1 g) = 0.544 W/kg; SAR(10 g) = 0.331 W/kg
Maximum value of SAR (measured) = 0.663 W/kg
Flat-Section/Front 0mm/Zoom Scan (36x36x36)/Cube 0: Interpolated grid: dx=1.000 mm, dy=1.000 mm, dz=1.000 mm
Reference Value = 18.21 V/m; Power Drift = -0.21 dB
Penetration depth = 12.08 (10.16, 13.83) [mm]
Maximum value of SAR (interpolated) = 0.917 W/kg
Flat-Section/Front 0mm/Zoom Scan (8x8x7)/Cube 0: Measurement grid: dx=5mm, dy=5mm, dz=5mm
Reference Value = 18.21 V/m; Power Drift = -0.21 dB

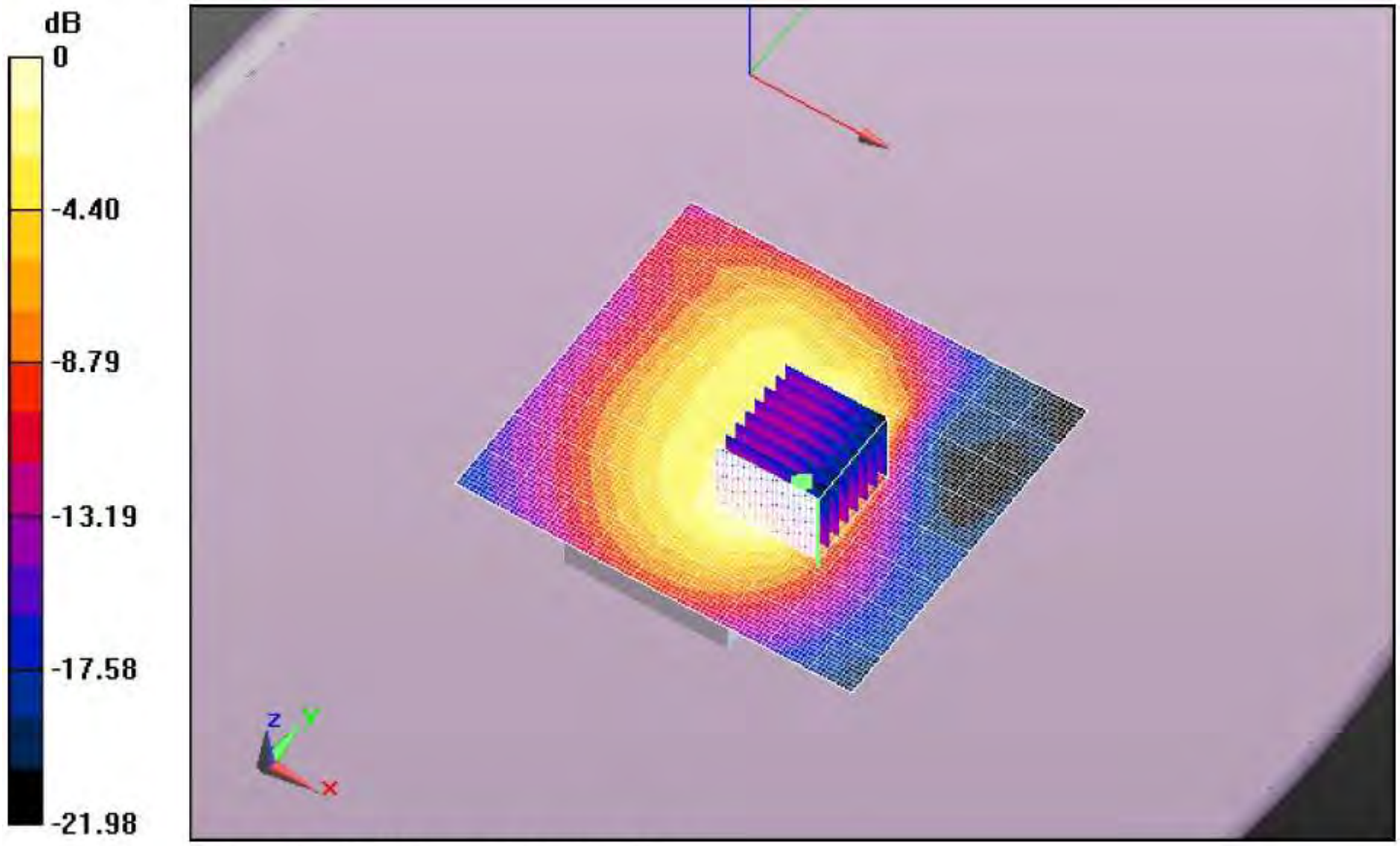

0 dB = 0.586 W/kg = -2.32 dBW/kg

23. LTE-12 Bottom 0mm

Date/Time: 11/22/2017 7:32:40 PM
Test Laboratory: Cetecom Inc. SAR 1 Lab
DUT: ID System; Type: EUT; Serial: Not Specified
Communication System: UID 10175 - CAB, LTE-FDD (SC-FDMA, 1 RB, 10 MHz, QPSK); Frequency: 707.5 MHz
Medium: MSL750_Batch 110526-1
Medium parameters used (interpolated): f = 707.5 MHz; σ = 0.91 S/m; εr = 55.431; ρ = 1000 kg/m3
Phantom section: Flat Section
Measurement Standard: DASY5 (IEEE/IEC/ANSI C63.19-2007)

Procedure Notes: Test Technician: Lynn/Joseph Air Temperature: 21.2ãC Medium Temperature: 19.1ãC; Comments:

DASY Configuration:
I Probe: ES3DV3 - SN3323; ConvF(6.49, 6.49, 6.49); Calibrated: 5/12/2017;
I Sensor-Surface: 3mm (Mechanical Surface Detection), z = 2.0
I Electronics: DAE4 Sn1266; Calibrated: 5/16/2017
I Phantom: ELI 4.0; Type: QDOVA001BA; Serial: 1092
I DASY52 52.8.8(1222);
Flat-Section/Bottom 0mm/Area Scan (91x81x1): Interpolated grid: dx=1.500 mm, dy=1.500 mm
Maximum value of SAR (interpolated) = 0.764 W/kg
Flat-Section/Bottom 0mm/Area Scan (10x9x1): Measurement grid: dx=15mm, dy=15mm
Maximum value of SAR (measured) = 0.693 W/kg
Flat-Section/Bottom 0mm/Zoom Scan (7x8x7)/Cube 0: Measurement grid: dx=5mm, dy=5mm, dz=5mm
Reference Value = 19.31 V/m; Power Drift = 0.65 dB
Peak SAR (extrapolated) = 0.983 W/kg
SAR(1 g) = 0.652 W/kg; SAR(10 g) = 0.418 W/kg
Maximum value of SAR (measured) = 0.764 W/kg
Flat-Section/Bottom 0mm/Zoom Scan (31x36x36)/Cube 0: Interpolated grid: dx=1.000 mm, dy=1.000 mm, dz=1.000 mm
Reference Value = 19.31 V/m; Power Drift = 0.65 dB
Penetration depth = 12.43 (11.99, 13.34) [mm]
Maximum value of SAR (interpolated) = 0.983 W/kg
Flat-Section/Bottom 0mm/Zoom Scan (7x8x7)/Cube 0: Measurement grid: dx=5mm, dy=5mm, dz=5mm
Reference Value = 19.31 V/m; Power Drift = 0.65 dB

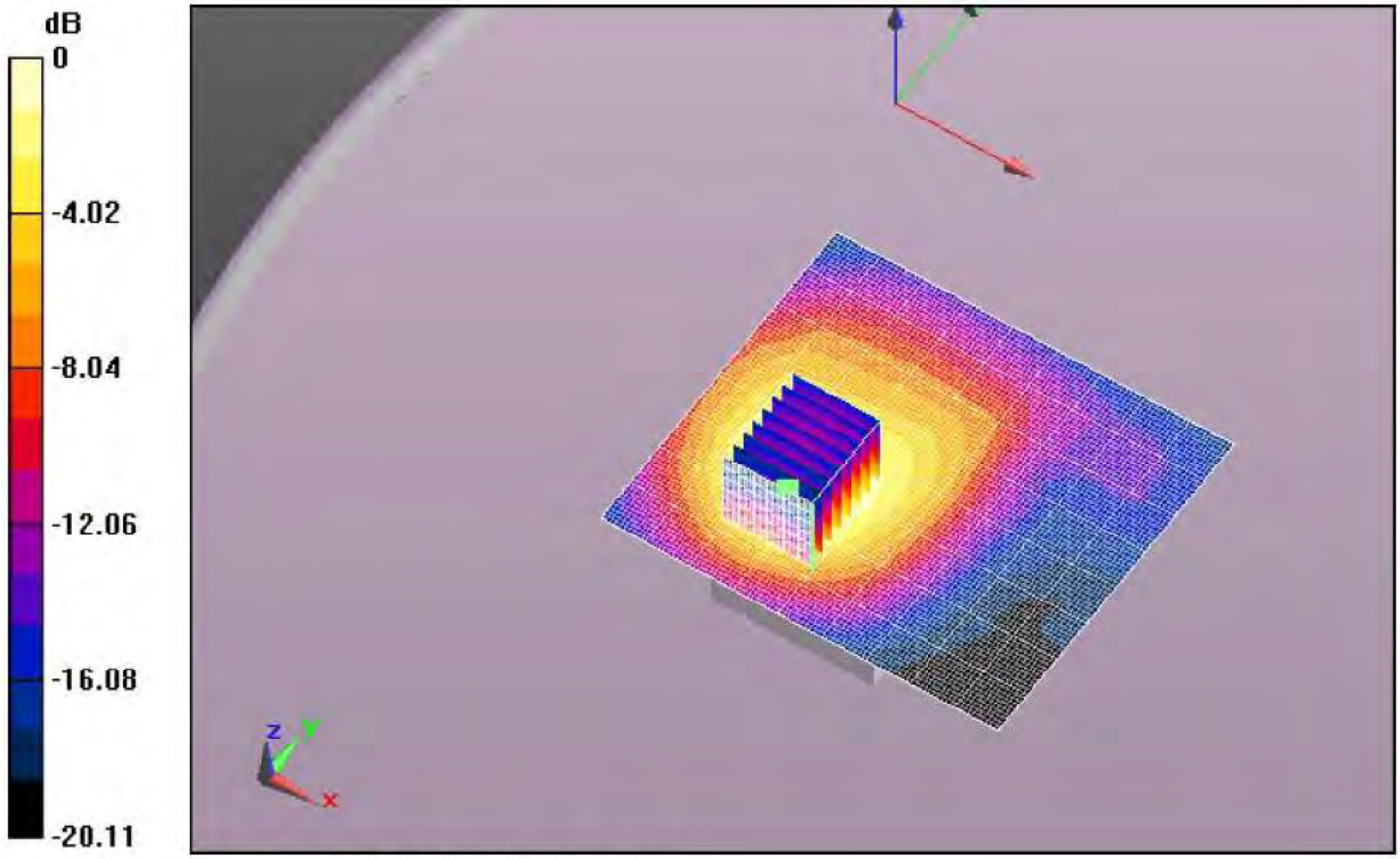

0 dB = 0.764 W/kg = -1.17 dBW/kg

24. LTE-12 Antenna 0mm

Date/Time: 11/22/2017 8:00:44 PM
Test Laboratory: Cetecom Inc. SAR 1 Lab
DUT: ID System; Type: EUT; Serial: Not Specified
Communication System: UID 10175 - CAB, LTE-FDD (SC-FDMA, 1 RB, 10 MHz, QPSK); Frequency: 707.5 MHz
Medium: MSL750_Batch 110526-1
Medium parameters used (interpolated): f = 707.5 MHz; σ = 0.91 S/m; εr = 55.431; ρ = 1000 kg/m3
Phantom section: Flat Section
Measurement Standard: DASY5 (IEEE/IEC/ANSI C63.19-2007)

Procedure Notes: Test Technician: Lynn Air Temperature: 21.8ॐC Medium Temperature: 19.1ॐC; Comments:

DASY Configuration:
I Probe: ES3DV3 - SN3323; ConvF(6.49, 6.49, 6.49); Calibrated: 5/12/2017;
I Sensor-Surface: 3mm (Mechanical Surface Detection), z = 2.0
I Electronics: DAE4 Sn1266; Calibrated: 5/16/2017
I Phantom: ELI 4.0; Type: QDOVA001BA; Serial: 1092
I DASY52 52.8.8(1222);
Flat-Section/Side 0mm/Area Scan (91x81x1): Interpolated grid: dx=1.500 mm, dy=1.500 mm
Maximum value of SAR (interpolated) = 0.722 W/kg
Flat-Section/Side 0mm/Area Scan (10x9x1): Measurement grid: dx=15mm, dy=15mm
Maximum value of SAR (measured) = 0.675 W/kg
Flat-Section/Side 0mm/Zoom Scan (8x8x7)/Cube 0: Measurement grid: dx=5mm, dy=5mm, dz=5mm
Reference Value = 24.04 V/m; Power Drift = 0.14 dB
Peak SAR (extrapolated) = 1.35 W/kg
SAR(1 g) = 0.682 W/kg; SAR(10 g) = 0.365 W/kg
Maximum value of SAR (measured) = 0.869 W/kg
Flat-Section/Side 0mm/Zoom Scan (36x36x36)/Cube 0: Interpolated grid: dx=1.000 mm, dy=1.000 mm, dz=1.000 mm
Reference Value = 24.04 V/m; Power Drift = 0.14 dB
Penetration depth = 9.106 (7.967, 10.28) [mm]
Maximum value of SAR (interpolated) = 1.34 W/kg
Flat-Section/Side 0mm/Zoom Scan (8x8x7)/Cube 0: Measurement grid: dx=5mm, dy=5mm, dz=5mm
Reference Value = 24.04 V/m; Power Drift = 0.14 dB

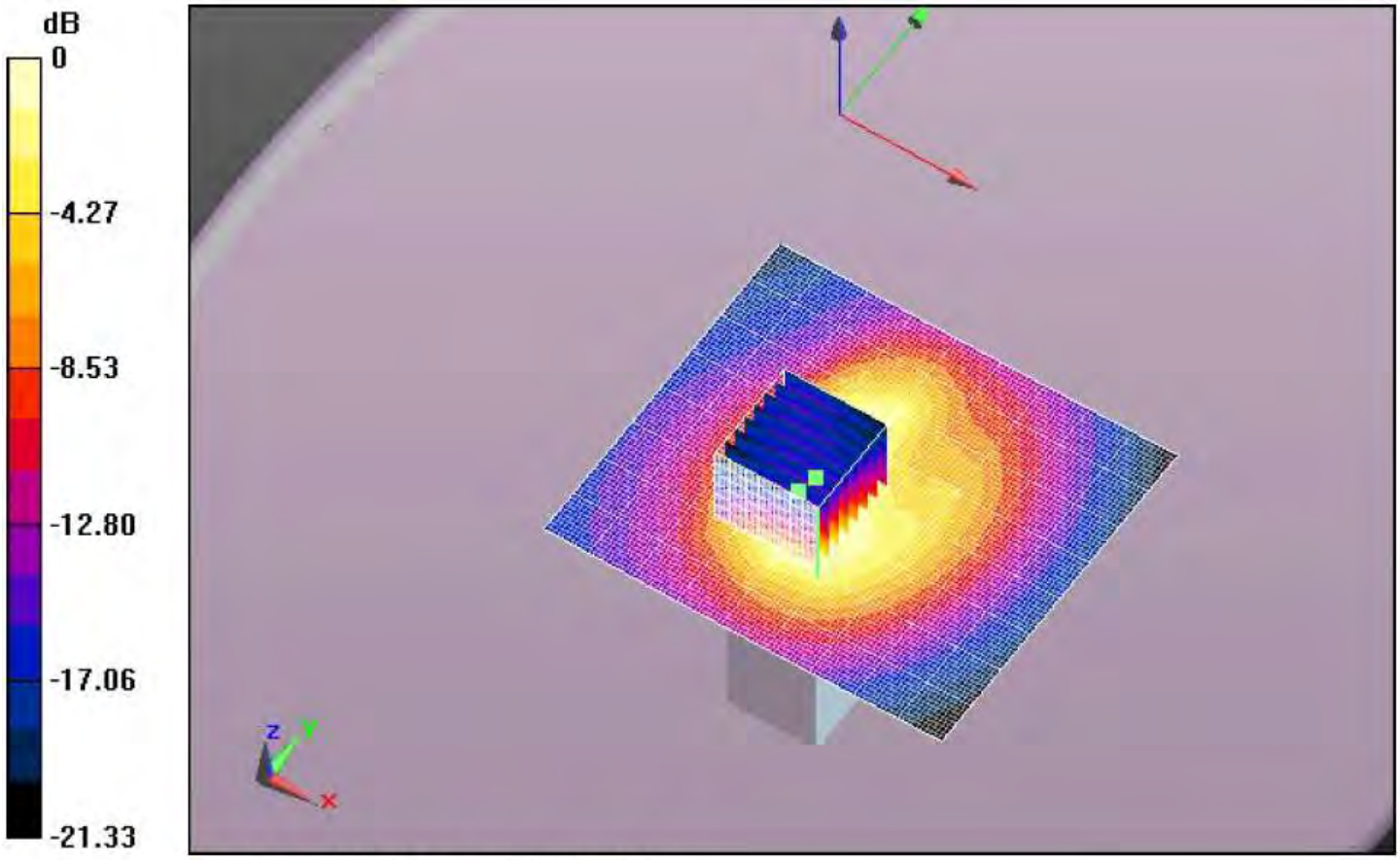

0 dB = 0.722 W/kg = -1.42 dBW/kg

25. Dipole verification 750 MHz

Date/Time: 11/22/2017 5:47:39 PM
Test Laboratory: Cetecom Inc. SAR 1 Lab
DUT: Dipole 750 MHz - D750V3 - SN1032_April 2016; Type: D750V3; Serial: D750V3 - SN:1032
Communication System: UID 0, CW (0); Frequency: 750 MHz
Medium: MSL750_Batch 110526-1
Medium parameters used: f = 750 MHz; σ = 0.964 S/m; εr = 54.896; ρ = 1000 kg/m3
Phantom section: Flat Section
Measurement Standard: DASY5 (IEEE/IEC/ANSI C63.19-2007)

Procedure Notes: Test Technician: Joseph ; Air Temperature: 21.6ãC; Medium Temperature:19.1ãC ; Comments: ;

DASY Configuration:
I Probe: ES3DV3 - SN3323; ConvF(6.49, 6.49, 6.49); Calibrated: 5/12/2017;
I Sensor-Surface: 3mm (Mechanical Surface Detection), z = 32.0
I Electronics: DAE4 Sn1266; Calibrated: 5/16/2017
I Phantom: ELI 4.0; Type: QDOVA001BA; Serial: 1092
I DASY52 52.8.8(1222);
System Performance Check 750 MHz Head/d=10mm, Pin=1W, dist=3.0mm (ES-Probe)/Zoom Scan (7x7x7) (5x5x7)/Cube 0:
Measurement grid: dx=8mm, dy=8mm, dz=5mm
Reference Value = 52.45 V/m; Power Drift = -0.00 dB
Peak SAR (extrapolated) = 3.04 W/kg
SAR(1 g) = 2.13 W/kg; SAR(10 g) = 1.43 W/kg
Maximum value of SAR (measured) = 2.46 W/kg

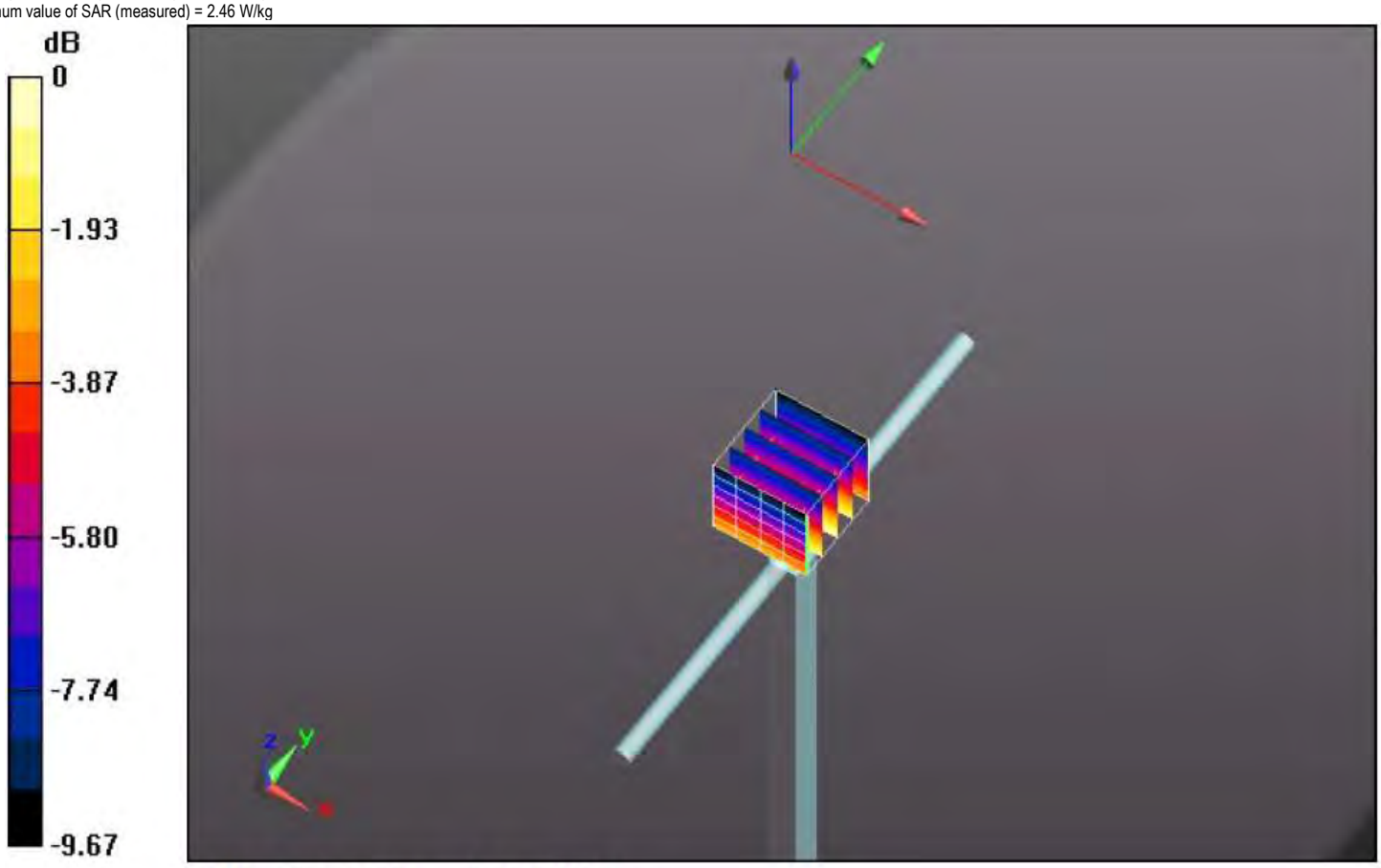

0 dB = 2.46 W/kg = 3.90 dBW/kg

26. Dipole verification 900 MHz

Date/Time: 11/20/2017 2:33:25 PM
Test Laboratory: Cetecom Inc. SAR 1 Lab
DUT: Dipole 900 MHz D900V2; Type: D900V2; Serial: D900V2 - SN:xxx
Communication System: UID 0, CW (0); Frequency: 900 MHz
Medium: MSL900_Batch 110518-7
Medium parameters used: f = 900 MHz; σ = 1.064 S/m; εr = 53.341; ρ = 1000 kg/m3
Phantom section: Flat Section
Measurement Standard: DASY5 (IEEE/IEC/ANSI C63.19-2007)

Procedure Notes: Test Technician: Lynn Air Temperature: 23.1°C Medium Temperature: 20.7°C; Comments:

DASY Configuration:
I Probe: ES3DV3 - SN3323; ConvF(6.31, 6.31, 6.31); Calibrated: 5/12/2017;
I Sensor-Surface: 3mm (Mechanical Surface Detection), z = 2.0
I Electronics: DAE4 Sn1266; Calibrated: 5/16/2017
I Phantom: ELI v4.0_Front; Type: QDOVA001BB; Serial: TP:xxxx
I DASY52 52.8.8(1222);
Flat-Section/Front 0mm 2/Zoom Scan (8x8x7)/Cube 0: Measurement grid: dx=5mm, dy=5mm, dz=5mm
Reference Value = 52.03 V/m; Power Drift = -0.17 dB
Peak SAR (extrapolated) = 3.29 W/kg
SAR(1 g) = 2.23 W/kg; SAR(10 g) = 1.47 W/kg
Maximum value of SAR (measured) = 2.61 W/kg

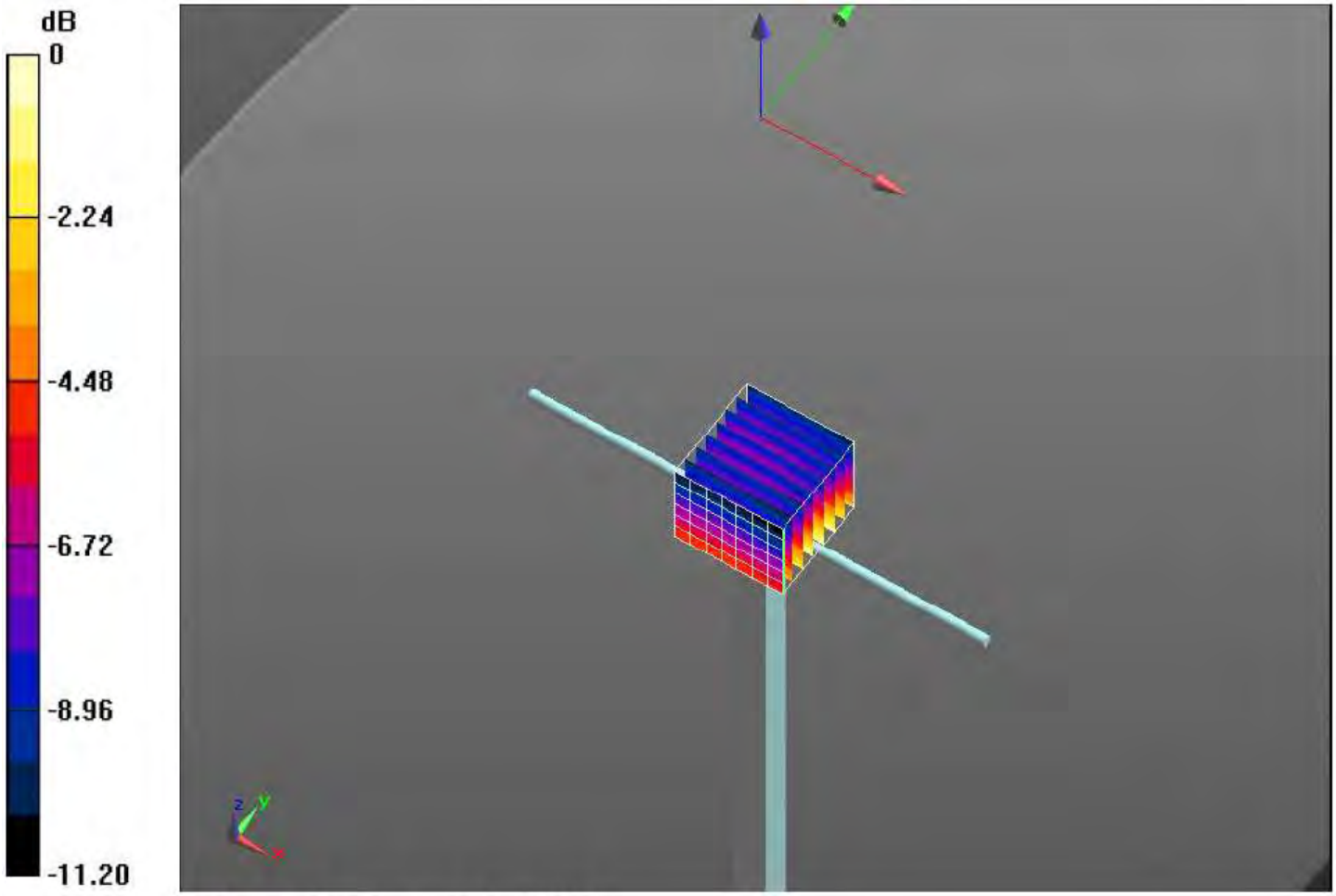

0 dB = 2.61 W/kg = 4.17 dBW/kg

27. Dipole verification 1750 MHz

Date/Time: 11/21/2017 2:28:50 PM
Test Laboratory: Cetecom Inc. SAR 1 Lab
DUT: Dipole 1750 MHz - D1750V2 - SN1045_April 2016; Type: D1750V2; Serial: D1750V2 - SN:1045
Communication System: UID 0, CW; Frequency: 1750 MHz
Medium: MSL1750_Batch 100824-2
Medium parameters used: f = 1750 MHz; σ = 1.526 S/m; εr = 51.14; ρ = 1000 kg/m3
Phantom section: Flat Section
Measurement Standard: DASY5 (IEEE/IEC/ANSI C63.19-2007)

Procedure Notes: Test Technician: John; Air Temperature: 22.2°C; Medium Temperature: 21.2°C; Comments: ;

DASY Configuration:
I Probe: ES3DV3 - SN3323; ConvF(5.15, 5.15, 5.15); Calibrated: 5/12/2017;
I Sensor-Surface: 3mm (Mechanical Surface Detection), z = 2.0, 32.0
I Electronics: DAE4 Sn1266; Calibrated: 5/16/2017
I Phantom: ELI v4.0_Front; Type: QDOVA001BB; Serial: TP:xxxx
I DASY52 52.8.8(1222);
System Performance Check at Frequencies above 1 GHz/d=10mm, Pin=.1W, dist=3.0mm (ES-Probe)/Area Scan (4x4x1): Measurement grid: dx=15mm, dy=15mm
Maximum value of SAR (measured) = 10.8 W/kg
System Performance Check at Frequencies above 1 GHz/d=10mm, Pin=.1W, dist=3.0mm (ES-Probe)/Zoom Scan (7x7x7) (5x5x7)/Cube 0: Measurement grid: dx=8mm, dy=8mm, dz=5mm
Reference Value = 95.12 V/m; Power Drift = -0.01 dB
Peak SAR (extrapolated) = 18.1 W/kg
SAR(1 g) = 10.4 W/kg; SAR(10 g) = 5.54 W/kg
Maximum value of SAR (measured) = 13.1 W/kg

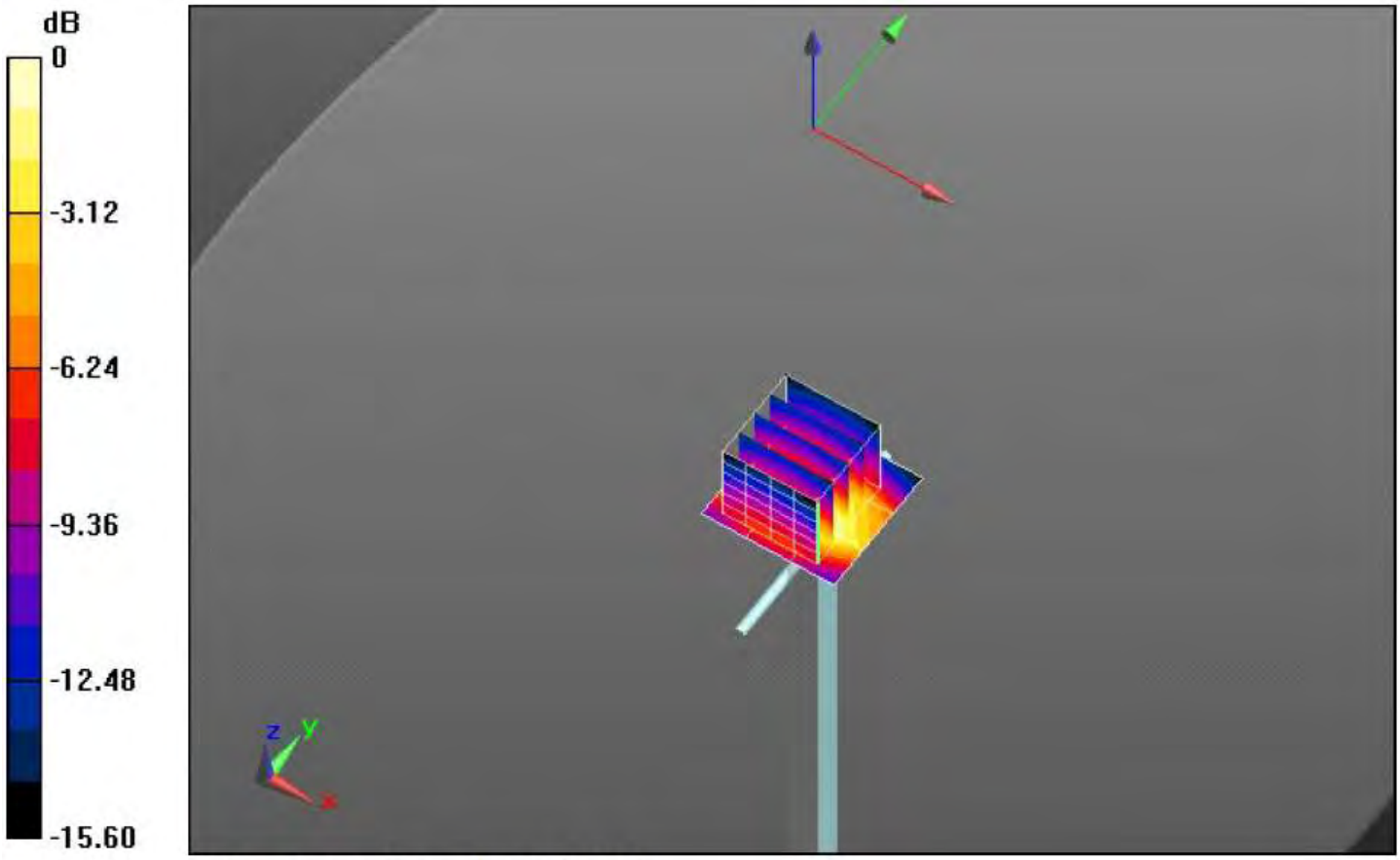

0 dB = 10.8 W/kg = 10.33 dBW/kg

28. Dipole verification 1900 MHz

Date/Time: 11/22/2017 4:59:35 PM
Test Laboratory: Cetecom Inc. SAR 1 Lab
DUT: Dipole 1900 MHz - D1900V2 - SN5d135_April 2016; Type: D1900V2; Serial: D1900V2 - SN:5d135
Communication System: UID 10000, CW; Frequency: 1900 MHz
Medium: MSL1900_Batch 110615-4
Medium parameters used: f = 1900 MHz; σ = 1.577 S/m; εr = 50.836; ρ = 1000 kg/m3
Phantom section: Flat Section
Measurement Standard: DASY5 (IEEE/IEC/ANSI C63.19-2007)

Procedure Notes: Test Technician: Lynn/Joseph Air Temperature: 21.4ãC; Medium Temperature: 20.5ãC; Comments: ;

DASY Configuration:
I Probe: ES3DV3 - SN3323; ConvF(4.97, 4.97, 4.97); Calibrated: 5/12/2017;
I Sensor-Surface: 3mm (Mechanical Surface Detection), z = 32.0
I Electronics: DAE4 Sn1266; Calibrated: 5/16/2017
I Phantom: ELI v4.0_Front; Type: QDOVA001BB; Serial: 1124
I DASY52 52.8.8(1222);
System Performance Check at Frequencies above 1 GHz/OBS_d=10mm, Pin=1W, dist=3.0mm (ES-Probe)/Zoom Scan (7x7x7) (5x5x7)/Cube 0: Measurement grid: dx=8mm, dy=8mm, dz=5mm
Reference Value = 91.03 V/m; Power Drift = -0.17 dB
Peak SAR (extrapolated) = 17.1 W/kg
SAR(1 g) = 9.45 W/kg; SAR(10 g) = 4.89 W/kg
Maximum value of SAR (measured) = 12.0 W/kg

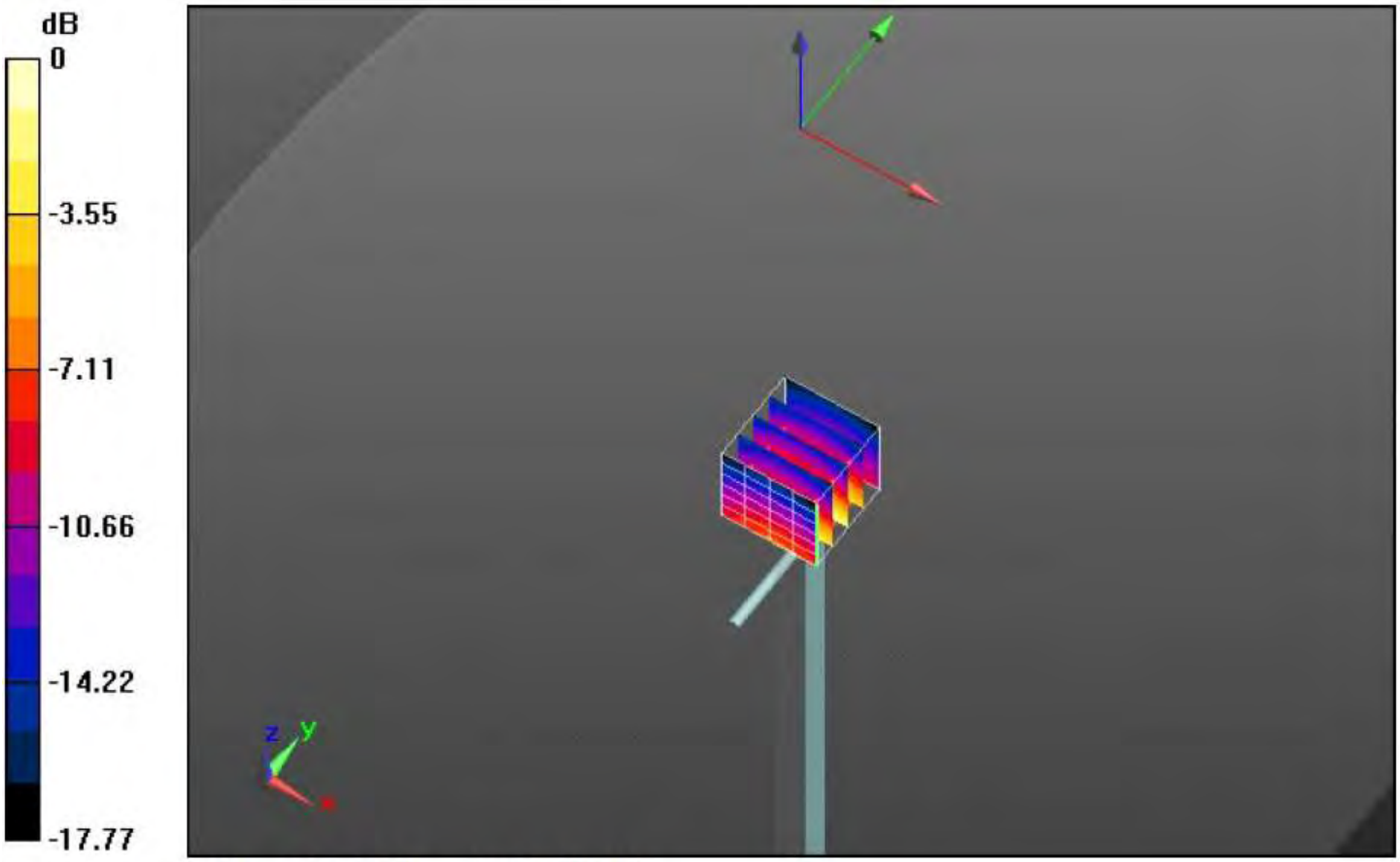

0 dB = 12.0 W/kg = 10.79 dBW/kg