FCC ID: N6SMR1R2

THIS DEVICE COMPLIES WITH PART 15 OF THE FCC RULES. OPERATION IS SUBJECT TO THE FOLLOWING TWO CONDITIONS:

(1) THIS DEVICE MAY NOT CAUSE HARMFUL INTERFERENCE AND
(2) THIS DEVICE MUST ACCEPT ANY INTERFERENCE RECEIVED, INCLUDING INTERFERENCE THAT MAY CAUSE UNDESIRED OPERATION.

T20606 GX

FCC label attached to side of TRIND card cage

(3.65" x 1.85")

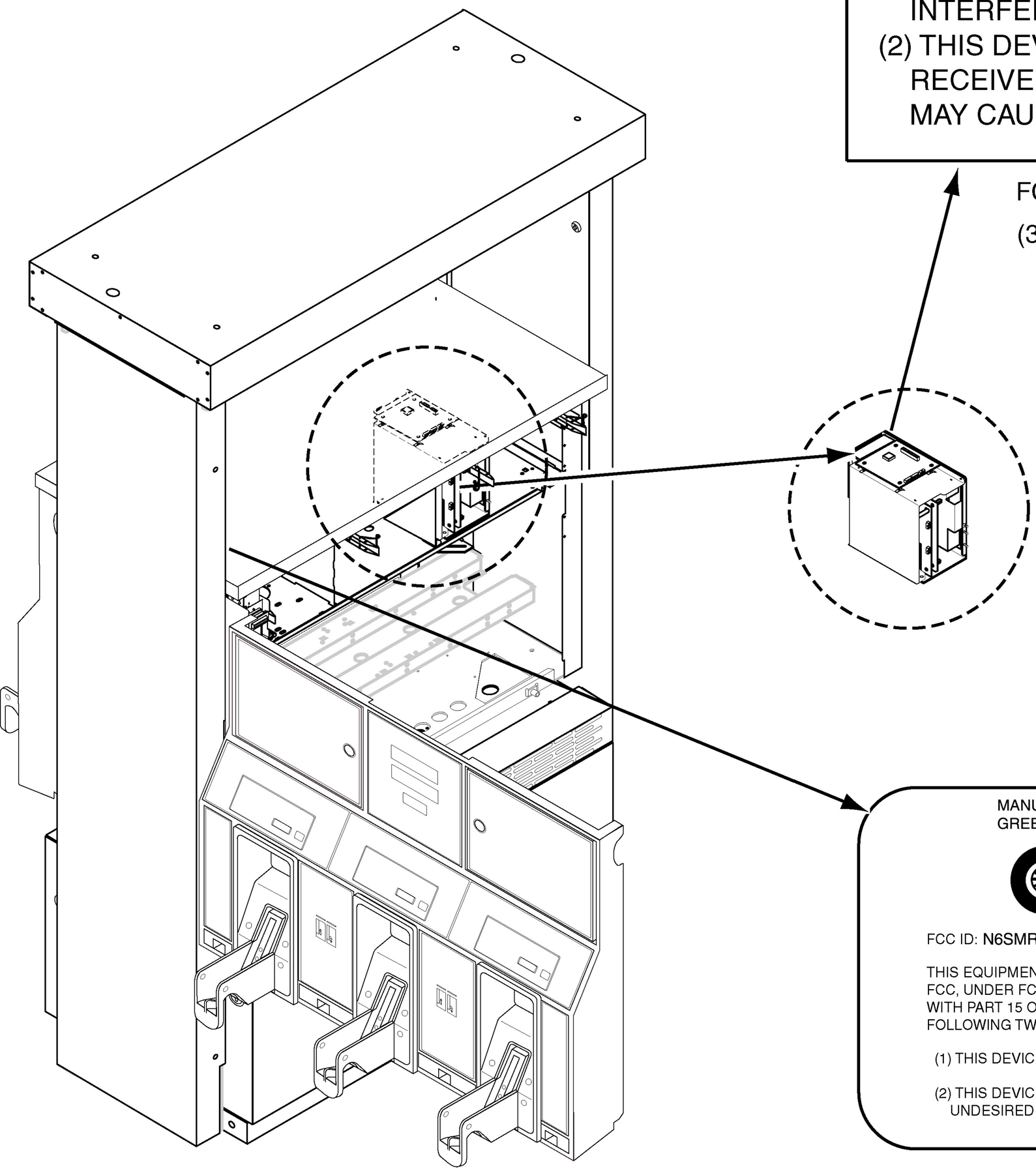

MANUFACTURED BY MARCONI COMMERCE SYSTEMS INC.
GREENSBORO, NC USA

Gilbarco®

FCC ID: N6SMR1R2

THIS EQUIPMENT CONTAINS AN INTENTIONAL RADIATOR APPROVED BY THE FCC, UNDER FCC I.D. NUMBER SHOWN ABOVE. THIS DEVICE COMPLIES WITH PART 15 OF THE FCC RULES. OPERATION IS SUBJECT TO THE FOLLOWING TWO CONDITIONS:

(1) THIS DEVICE MAY NOT CAUSE HARMFUL INTERFERENCE AND

(2) THIS DEVICE MUST ACCEPT ANY INTERFERENCE THAT MAY CAUSE UNDESIRED OPERATION.

N23949 01

FCC label attached to the inner column

(3" x 1.4")

Note: Labels shown actual size

Product shown above is typical, but label locations are the same for all product.