User Manual

Product Name: Bluetooth speaker

Model: P10,P16

Manufacture: KINGTA TECHNOLOGY CO., LTD

P10

Introduction

Thank you for choosing the P10 as your source for entertainment! you can use this item with iPads , iPhones,iPods and many types of smartphone to stream music ,and enjoy handsfree calling.In order to get the best results when using the device,please read this manual first before using.

Description:

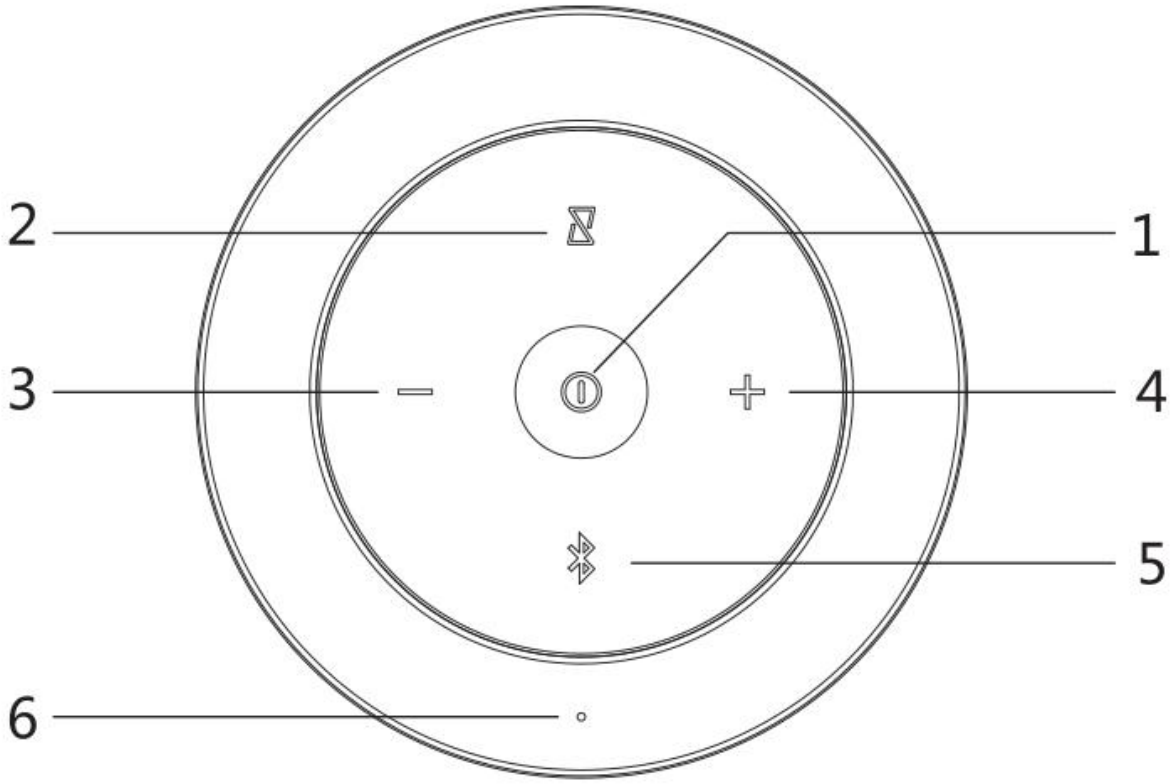

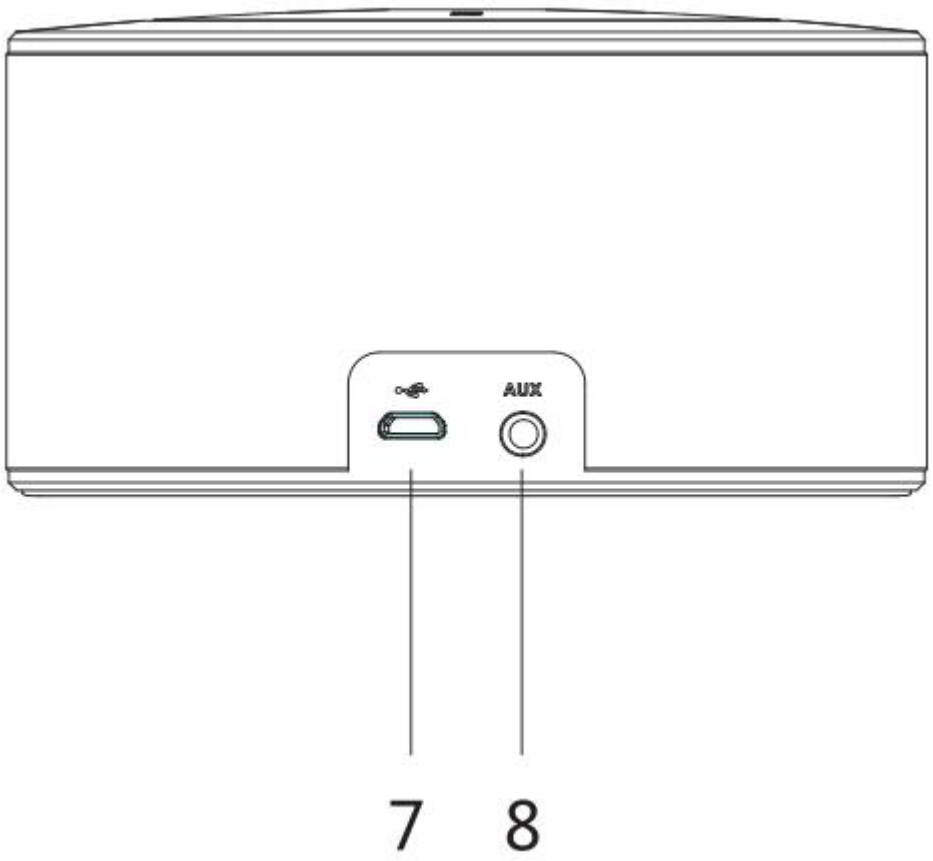

1.ON/OFF /Play/Pause/Phone button

2.multiple point button

3.Previous/Volume –

4.Next/Volume +

5.Bluetooth LED

6.MIC

7.Micro USB Charging Port

8.AUX in Port

Included:

1.Speaker

2.USB Micro Charging Cable

3.3.5 mm Audio Cable

4.User Manual

Specifications

Supported Profiles: A2DP, HFP, AVRCP,HSP

Bluetooth Range: 33ft (10m)

Dimensions: 120 mm x 120 mm x 60mm

Battery: Li-Ion 3.7V, 2400 mAh

Charging: DC5V±0.5/650mA

Weight: 412g

Operation

Powering On

Press and Hold " ⏻ " button 2 seconds to power ON .

Powering Off

Press and Hold " ⏻ " button 2 seconds to power off .

Begin Streaming Music

Press “ ⏻ ” to start playing music

Press and Hold “ + ” 2 seconds to play the next track

Press and Hold “ — ” 2 seconds to play previous track

Press either “ + ” or “ — ” for volume control

Making and Receiving Phone Calls

When the unit is connected and paired to your device, the unit allows you to make or receive phone calls with its built-in microphone.

Press “ ” to accept a call

To end a call press “ ”

Bluetooth Mode

Pairing

In order to pair your Bluetooth audio device to your Bluetooth Speaker for the first time, follow the steps below:

1. Make sure your Bluetooth audio source is held within ten meters of your speaker.
2. Press and hold “ “to power on the Bluetooth Speaker, “ “ LED will be blink to indicate shave entered pairing status.
3. Go to the Bluetooth Manager of your Bluetooth audio source. Please refer to the User’s Manual of your Bluetooth audio source for more information.
4. Search Bluetooth devices and select “P10”

5. Once paired, the “ “ will be solid and you can use your speaker to listen to audio from you Bluetooth sound source.

*** P10 support reconnection function

Note: Bluetooth Timeout :10 minutes

Aux-In Mode

Plug in the supplied 3.5 mm cable into the unit. The other end is connected to your device. The unit will automatically enter the Aux-In Mode .

Please note music and volume can be controlled by your device.

Bluetooth Disconnection

When the unit is connected and paired to your device, press and hole " “ to disconnect the Bluetooth Mode

Charging

Attach the USB cable to the unit, and plug into any USB charger. If the unit is completely discharged, it will take approximately 4 hours to fully charge.

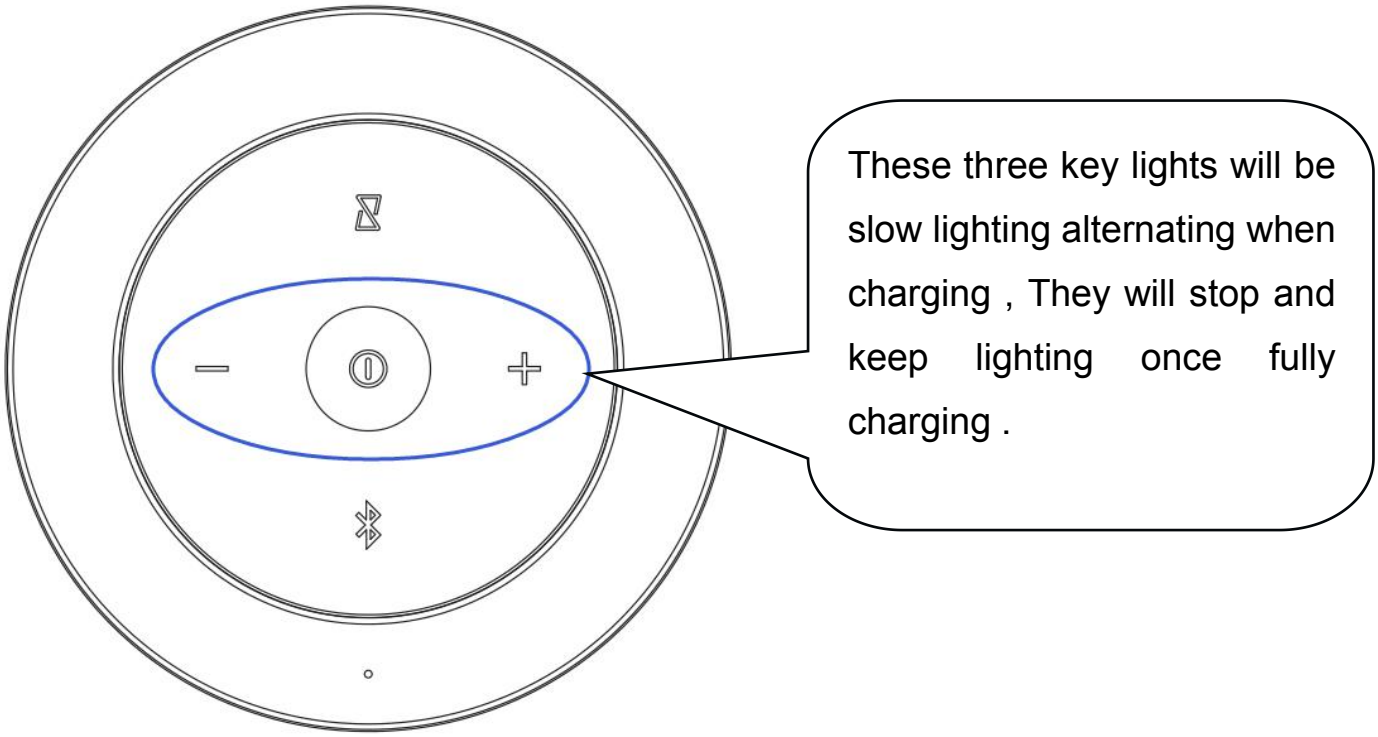

Note:There will be a beep when the battery is low and needs to be recharged.

Multiple point function (TWS Wireless Stereo Mode)

If you have two pieces P10, you can use TWS to achieve wireless stereo combined playing music.

1、 Make sure two P10 is without any Bluetooth connection.

2、 Power on both speakers, and press “ “ button on one of the speaker, the two speakers will connect automatically with separate tone. When” ” LED blink on the one speaker and “ “ keeps **solid** on the other one, it means the TWS connection is successful.

3、 Then you can search Bluetooth Device and select “P10”.

4、 Bluetooth Disconnection

Press and Hold “ ” 2 seconds to disconnect the Bluetooth Mode.

5、 Press and Hold " " button 2 seconds on one of the units , both units will be power off

Troubleshooting

Unit doesn’t connect to device	Speaker needs to be connected/re-paired to device
A tone is heard every few seconds	Speaker needs to be charged
Unit will not power on	Speaker needs to be charged
Unit doesn’t control track(s)/volume	Speaker needs to be in Bluetooth mode for full control
Unit distorts at high volume	The devices’ volume needs to be lowered

FCC Caution.

This device complies with part 15 of the FCC Rules. Operation is subject to the following two conditions: (1) This device may not cause harmful interference, and (2) this device must accept any interference received, including interference that may cause undesired operation.

Any Changes or modifications not expressly approved by the party responsible for compliance could void the user's authority to operate the equipment.

Note: This equipment has been tested and found to comply with the limits for a Class B digital device, pursuant to part 15 of the FCC Rules. These limits are designed to provide reasonable protection against harmful interference in a residential installation. This equipment generates uses and can radiate radio frequency energy and, if not installed and used in accordance with the instructions, may cause harmful interference to radio communications. However, there is no guarantee that interference will not occur in a particular installation. If this equipment does cause harmful interference to radio or television reception, which can be determined by turning the equipment off and on, the user is encouraged to try to correct the interference by one or more of the following measures:
-Reorient or relocate the receiving antenna.
-Increase the separation between the equipment and receiver.
-Connect the equipment into an outlet on a circuit different from that to which the receiver is connected.
-Consult the dealer or an experienced radio/TV technician for help.

The device has been evaluated to meet general RF exposure requirement. The device can be used in portable exposure condition without restriction.