Test Laboratory: Compliance Certification Services

M2 Note-Aluminum Frame-Cell Band

DUT: M2 Note - Aluminum; Type: Host Laptop; Serial: N/A

Communication System: CDMA; Frequency: 824.7 MHz;Duty Cycle: 1:1
Medium parameters used: f = 825 MHz; σ = 0.943 mho/m; ε_r = 52.9; ρ = 1000 kg/m^3
Phantom section: Flat Section

Room Ambient Temperature: 23.0deg. C; Liquid Temperature: 22.0 deg. C

DASY4 Configuration:
- Area Scan setting - Find Secondary Maximum Within: 2.0 dB and with a peak SAR value greater than 0.0012W/kg
- Probe: EX3DV3 - SN3531; ConvF(10.54, 10.54, 10.54); Calibrated: 7/21/2005
- Sensor-Surface: 4mm (Mechanical Surface Detection)
- Electronics: DAE4 SN558; Calibrated: 1/20/2006
- Phantom: SAM 2; Type: SAM 2; Serial: 1050
- Measurement SW: DASY4, V4.7 Build 21; Postprocessing SW: SEMCAD, V1.8 Build 170

CDMA2000 1xRTT ch 1013/Area Scan (9x9x1): Measurement grid: dx=15mm, dy=15mm
Maximum value of SAR (measured) = 0.083 mW/g

CDMA2000 1xRTT ch 1013/Zoom Scan (5x5x7)/Cube 0: Measurement grid: dx=7.5mm, dy=7.5mm, dz=5mm
Reference Value = 9.40 V/m; Power Drift = 0.050 dB
Peak SAR (extrapolated) = 0.124 W/kg
SAR(1 g) = 0.083 mW/g; SAR(10 g) = 0.057 mW/g
Maximum value of SAR (measured) = 0.092 mW/g

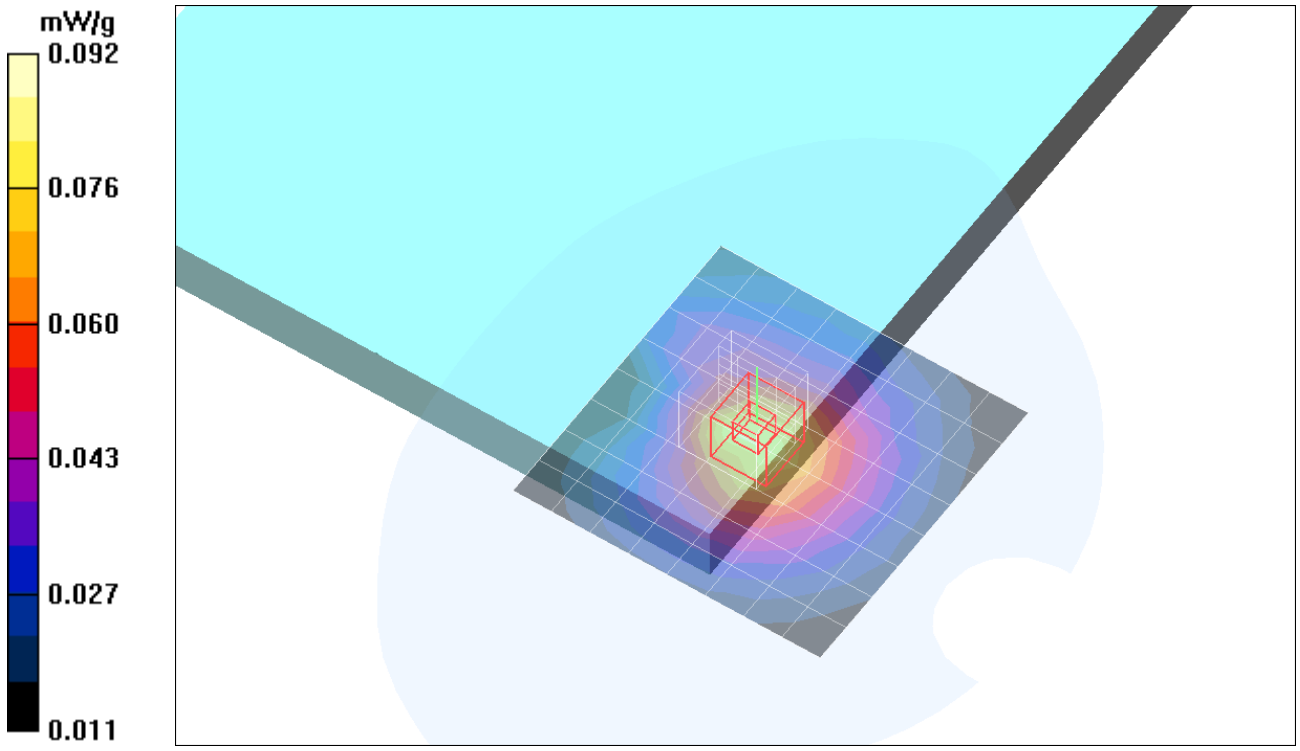

Test Laboratory: Compliance Certification Services

M2 Note-Aluminum Frame-Cell Band

DUT: M2 Note - Aluminum; Type: Host Laptop; Serial: N/A

Communication System: CDMA; Frequency: 836.52 MHz;Duty Cycle: 1:1
Medium parameters used (interpolated): f = 836.52 MHz; σ = 0.955 mho/m; ε_r = 52.8; ρ = 1000 kg/m^3
Phantom section: Flat Section

Room Ambient Temperature: 23.0deg. C; Liquid Temperature: 22.0 deg. C

DASY4 Configuration:
- Area Scan setting - Find Secondary Maximum Within: 2.0 dB and with a peak SAR value greater than 0.0012W/kg
- Probe: EX3DV3 - SN3531; ConvF(10.54, 10.54, 10.54); Calibrated: 7/21/2005
- Sensor-Surface: 4mm (Mechanical Surface Detection)
- Electronics: DAE4 SN558; Calibrated: 1/20/2006
- Phantom: SAM 2; Type: SAM 2; Serial: 1050
- Measurement SW: DASY4, V4.7 Build 21; Postprocessing SW: SEMCAD, V1.8 Build 170

CDMA2000 1xRTT ch 384/Area Scan (9x9x1): Measurement grid: dx=15mm, dy=15mm

Info: Interpolated medium parameters used for SAR evaluation.
Maximum value of SAR (measured) = 0.090 mW/g

CDMA2000 1xRTT ch 384/Zoom Scan (5x5x7)/Cube 0: Measurement grid: dx=7.5mm, dy=7.5mm, dz=5mm

Reference Value = 9.81 V/m; Power Drift = -0.070 dB
Peak SAR (extrapolated) = 0.154 W/kg
SAR(1 g) = 0.092 mW/g; SAR(10 g) = 0.061 mW/g
Info: Interpolated medium parameters used for SAR evaluation.
Maximum value of SAR (measured) = 0.103 mW/g

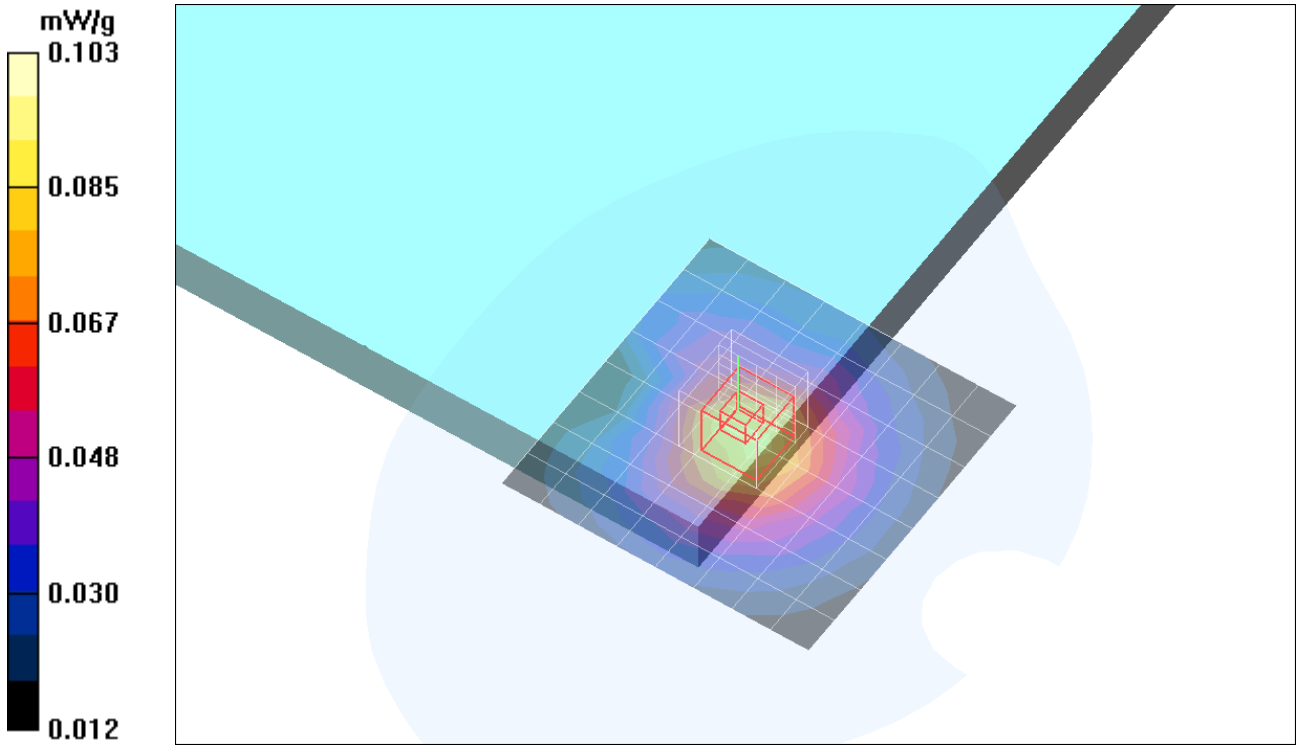

Date/Time: 5/15/2006 3:45:24 PM

Test Laboratory: Compliance Certification Services

M2 Note-Aluminum Frame-Cell Band

DUT: M2 Note - Aluminum; Type: Host Laptop; Serial: N/A

Communication System: CDMA; Frequency: 836.52 MHz;Duty Cycle: 1:1

CDMA2000 1xRTT ch 384/Z Scan (1x1x41): Measurement grid: dx=20mm, dy=20mm, dz=2.5mm

Info: Interpolated medium parameters used for SAR evaluation.
Maximum value of SAR (measured) = 0.063 mW/g

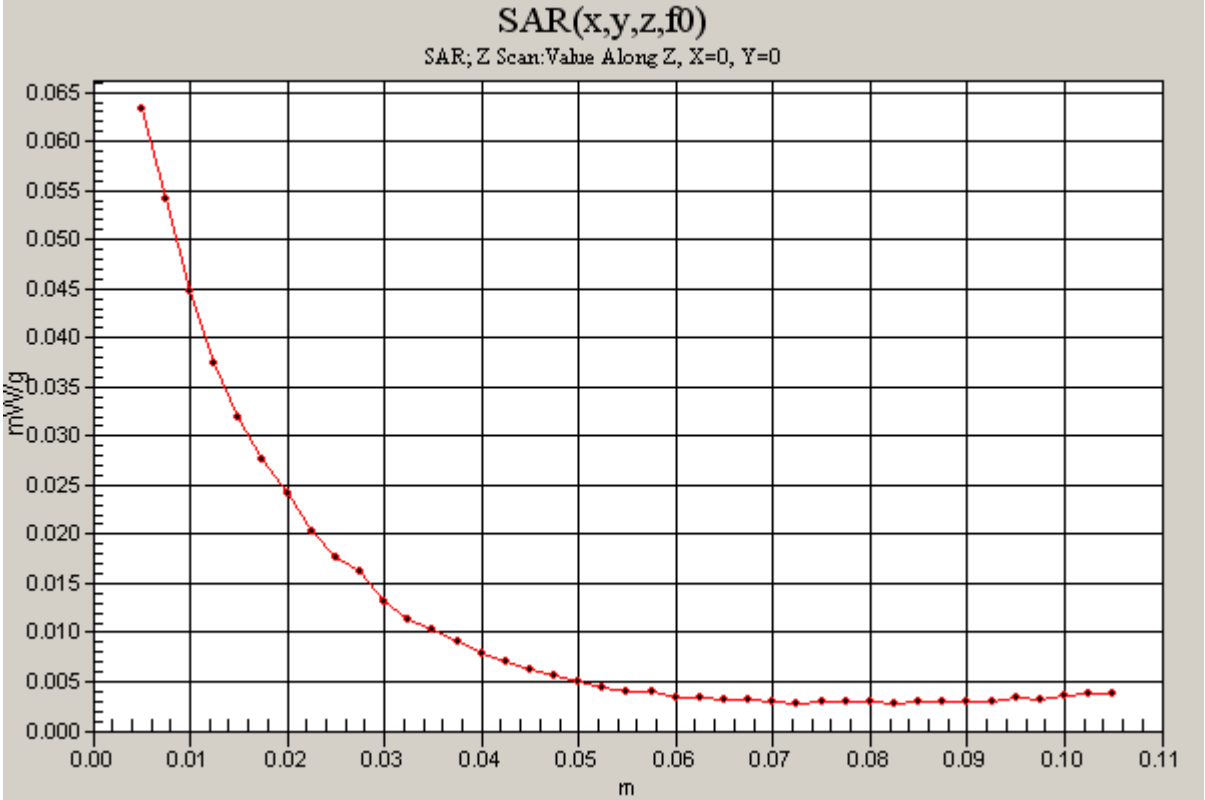

Test Laboratory: Compliance Certification Services

M2 Note-Aluminum Frame-Cell Band

DUT: M2 Note - Aluminum; Type: Host Laptop; Serial: N/A

Communication System: CDMA; Frequency: 848.31 MHz;Duty Cycle: 1:1
Medium parameters used (interpolated): f = 848.31 MHz; σ = 0.968 mho/m; ε_r = 52.6; ρ = 1000 kg/m^3
Phantom section: Flat Section

Room Ambient Temperature: 23.0deg. C; Liquid Temperature: 22.0 deg. C

DASY4 Configuration:
- Area Scan setting - Find Secondary Maximum Within: 2.0 dB and with a peak SAR value greater than 0.0012W/kg
- Probe: EX3DV3 - SN3531; ConvF(10.54, 10.54, 10.54); Calibrated: 7/21/2005
- Sensor-Surface: 4mm (Mechanical Surface Detection)
- Electronics: DAE4 SN558; Calibrated: 1/20/2006
- Phantom: SAM 2; Type: SAM 2; Serial: 1050
- Measurement SW: DASY4, V4.7 Build 21; Postprocessing SW: SEMCAD, V1.8 Build 170

CDMA2000 1xRTT ch 777/Area Scan (9x9x1): Measurement grid: dx=15mm, dy=15mm
Info: Interpolated medium parameters used for SAR evaluation.
Maximum value of SAR (measured) = 0.079 mW/g

CDMA2000 1xRTT ch 777/Zoom Scan (5x5x7)/Cube 0: Measurement grid: dx=7.5mm, dy=7.5mm, dz=5mm
Reference Value = 9.09 V/m; Power Drift = 0.049 dB
Peak SAR (extrapolated) = 0.118 W/kg
SAR(1 g) = 0.079 mW/g; SAR(10 g) = 0.053 mW/g
Info: Interpolated medium parameters used for SAR evaluation.
Maximum value of SAR (measured) = 0.084 mW/g

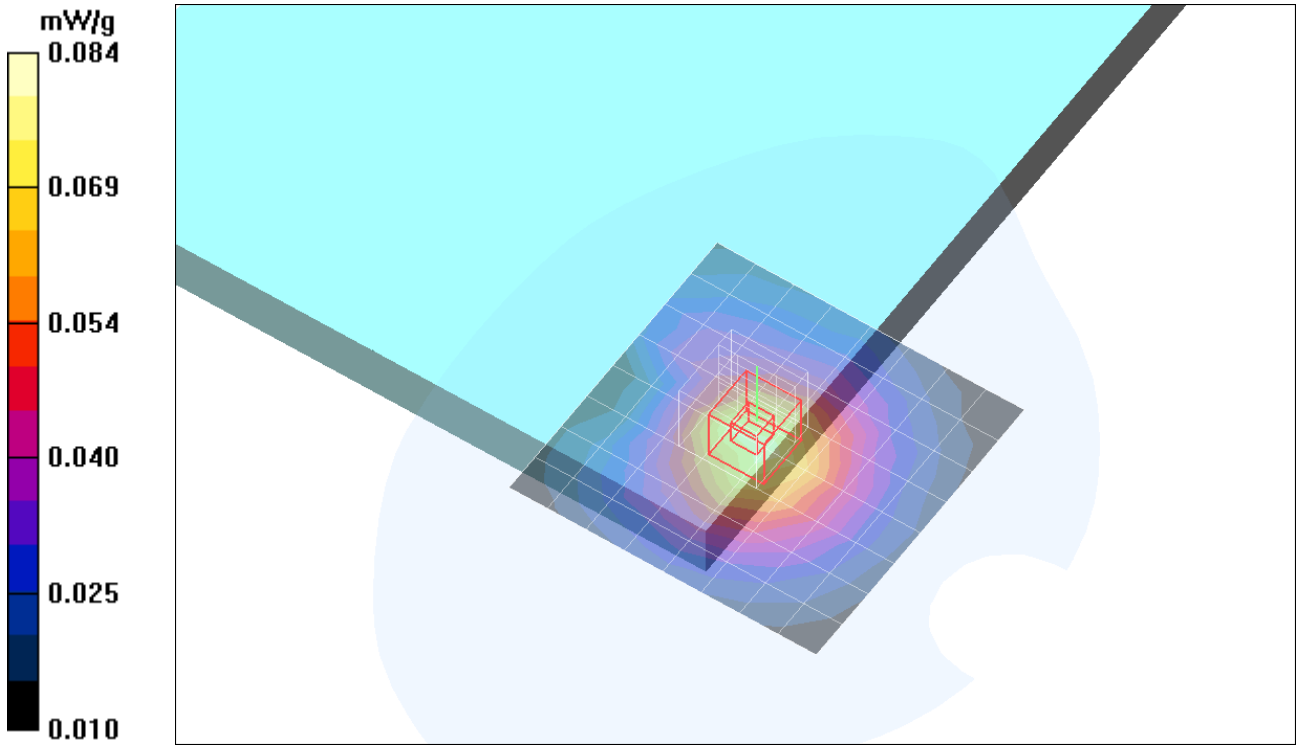

Test Laboratory: Compliance Certification Services

M2 Note-Aluminum Frame-Cell Band

DUT: M2 Note - Aluminum; Type: Host Laptop; Serial: N/A

Communication System: CDMA; Frequency: 836.52 MHz;Duty Cycle: 1:1
Medium parameters used (interpolated): f = 836.52 MHz; σ = 0.955 mho/m; ε_r = 52.8; ρ = 1000 kg/m^3
Phantom section: Flat Section

Room Ambient Temperature: 23.0deg. C; Liquid Temperature: 22.0 deg. C

DASY4 Configuration:
- Area Scan setting - Find Secondary Maximum Within: 2.0 dB and with a peak SAR value greater than 0.0012W/kg
- Probe: EX3DV3 - SN3531; ConvF(10.54, 10.54, 10.54); Calibrated: 7/21/2005
- Sensor-Surface: 4mm (Mechanical Surface Detection)
- Electronics: DAE4 SN558; Calibrated: 1/20/2006
- Phantom: SAM 2; Type: SAM 2; Serial: 1050
- Measurement SW: DASY4, V4.7 Build 21; Postprocessing SW: SEMCAD, V1.8 Build 170

CDMA2000 1xRTT ch 384 with WLAN/Area Scan (9x9x1): Measurement grid: dx=15mm, dy=15mm

Info: Interpolated medium parameters used for SAR evaluation.
Maximum value of SAR (measured) = 0.090 mW/g

CDMA2000 1xRTT ch 384 with WLAN/Zoom Scan (5x5x7)/Cube 0: Measurement grid: dx=7.5mm, dy=7.5mm, dz=5mm

Reference Value = 9.70 V/m; Power Drift = 0.094 dB
Peak SAR (extrapolated) = 0.137 W/kg
SAR(1 g) = 0.090 mW/g; SAR(10 g) = 0.061 mW/g
Info: Interpolated medium parameters used for SAR evaluation.
Maximum value of SAR (measured) = 0.096 mW/g

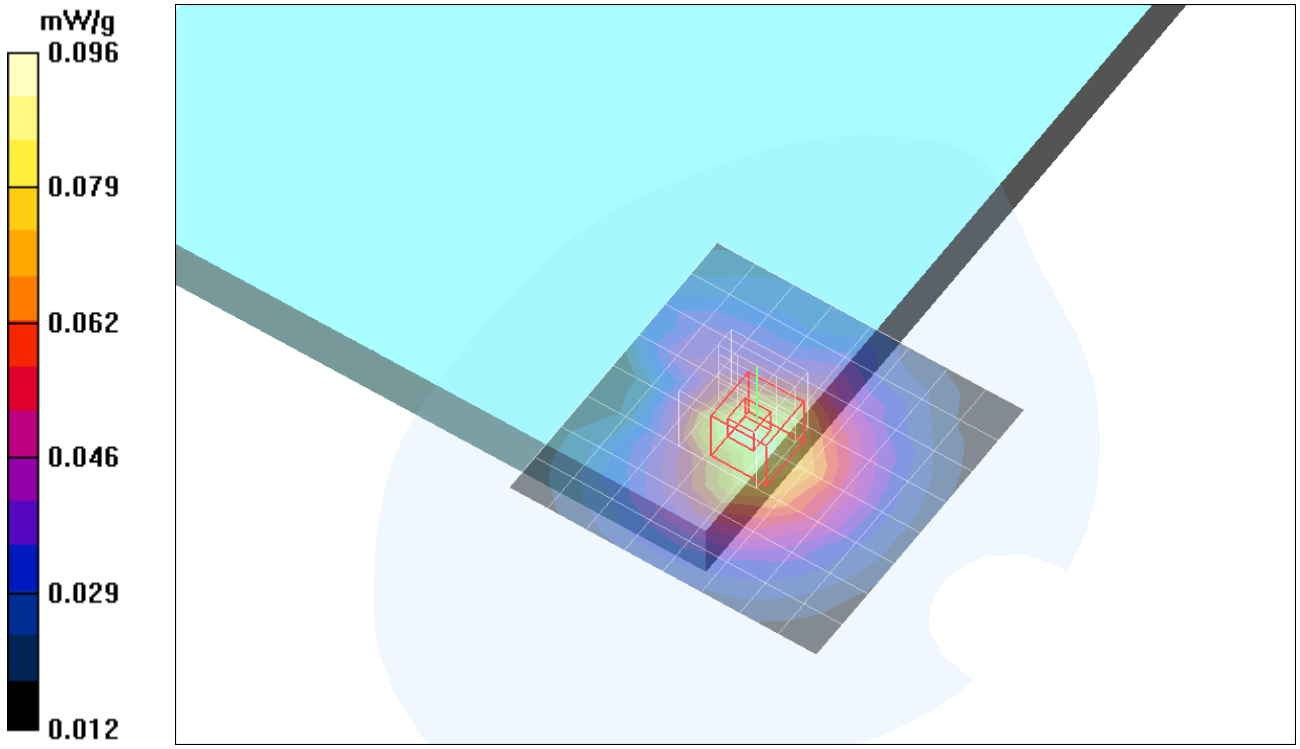

Test Laboratory: Compliance Certification Services

M2 Note-Aluminum Frame-Cell Band

DUT: M2 Note - Aluminum; Type: Host Laptop; Serial: N/A

Communication System: CDMA; Frequency: 824.7 MHz;Duty Cycle: 1:1
Medium parameters used: f = 825 MHz; σ = 0.943 mho/m; ε_r = 52.9; ρ = 1000 kg/m^3
Phantom section: Flat Section

Room Ambient Temperature: 23.0deg. C; Liquid Temperature: 22.0 deg. C

DASY4 Configuration:
- Area Scan setting - Find Secondary Maximum Within: 2.0 dB and with a peak SAR value greater than 0.0012W/kg
- Probe: EX3DV3 - SN3531; ConvF(10.54, 10.54, 10.54); Calibrated: 7/21/2005
- Sensor-Surface: 4mm (Mechanical Surface Detection)
- Electronics: DAE4 SN558; Calibrated: 1/20/2006
- Phantom: SAM 2; Type: SAM 2; Serial: 1050
- Measurement SW: DASY4, V4.7 Build 21; Postprocessing SW: SEMCAD, V1.8 Build 170

CDMA2000 1xEV-DO ch 1013/Area Scan (9x9x1): Measurement grid: dx=15mm, dy=15mm
Maximum value of SAR (measured) = 0.089 mW/g

CDMA2000 1xEV-DO ch 1013/Zoom Scan (5x5x7)/Cube 0: Measurement grid: dx=7.5mm, dy=7.5mm, dz=5mm
Reference Value = 9.39 V/m; Power Drift = 0.070 dB
Peak SAR (extrapolated) = 0.135 W/kg
SAR(1 g) = 0.089 mW/g; SAR(10 g) = 0.060 mW/g
Maximum value of SAR (measured) = 0.096 mW/g

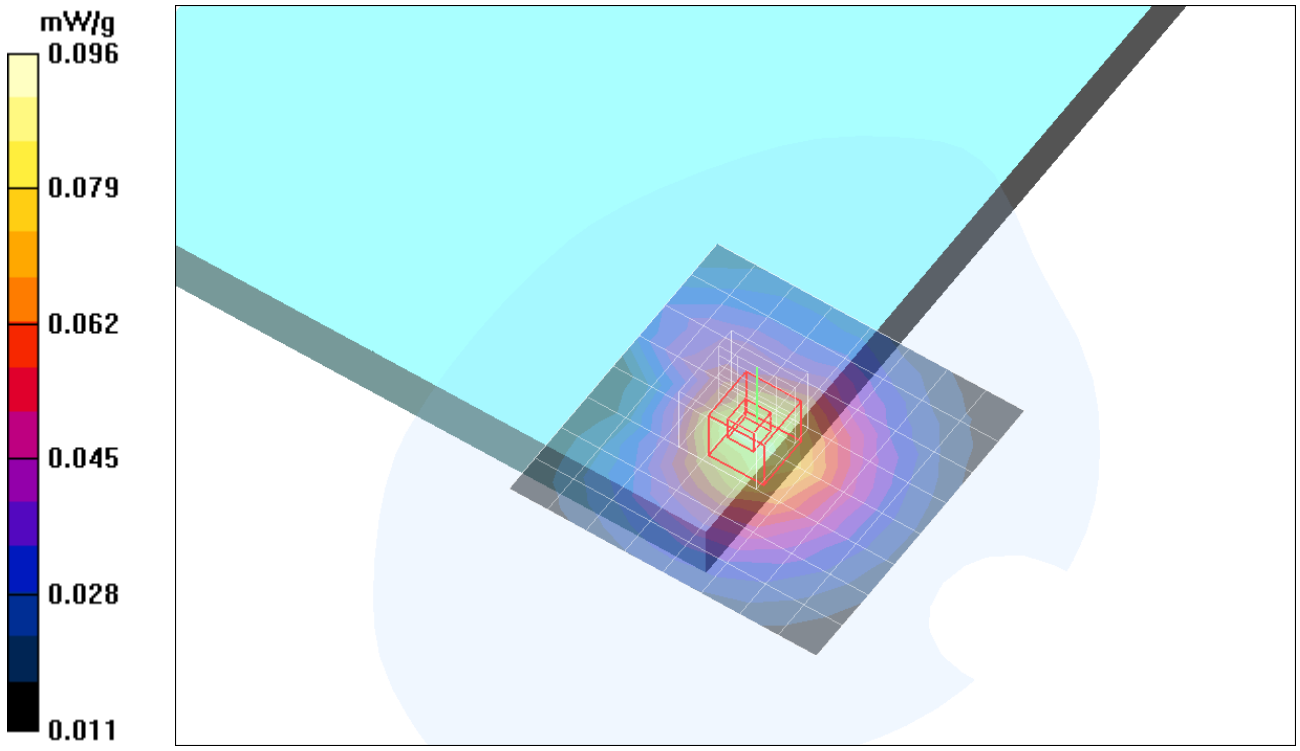

Test Laboratory: Compliance Certification Services

M2 Note-Aluminum Frame-Cell Band

DUT: M2 Note - Aluminum; Type: Host Laptop; Serial: N/A

Communication System: CDMA; Frequency: 836.52 MHz;Duty Cycle: 1:1
Medium parameters used (interpolated): f = 836.52 MHz; σ = 0.955 mho/m; ε_r = 52.8; ρ = 1000 kg/m^3
Phantom section: Flat Section

Room Ambient Temperature: 23.0deg. C; Liquid Temperature: 22.0 deg. C

DASY4 Configuration:
- Area Scan setting - Find Secondary Maximum Within: 2.0 dB and with a peak SAR value greater than 0.0012W/kg
- Probe: EX3DV3 - SN3531; ConvF(10.54, 10.54, 10.54); Calibrated: 7/21/2005
- Sensor-Surface: 4mm (Mechanical Surface Detection)
- Electronics: DAE4 SN558; Calibrated: 1/20/2006
- Phantom: SAM 2; Type: SAM 2; Serial: 1050
- Measurement SW: DASY4, V4.7 Build 21; Postprocessing SW: SEMCAD, V1.8 Build 170

CDMA2000 1xEV-DO ch 384/Area Scan (9x9x1): Measurement grid: dx=15mm, dy=15mm

Info: Interpolated medium parameters used for SAR evaluation.
Maximum value of SAR (measured) = 0.095 mW/g

CDMA2000 1xEV-DO ch 384/Zoom Scan (5x5x7)/Cube 0: Measurement grid: dx=7.5mm, dy=7.5mm, dz=5mm

Reference Value = 9.67 V/m; Power Drift = 0.009 dB
Peak SAR (extrapolated) = 0.153 W/kg
SAR(1 g) = 0.094 mW/g; SAR(10 g) = 0.064 mW/g
Info: Interpolated medium parameters used for SAR evaluation.
Maximum value of SAR (measured) = 0.102 mW/g

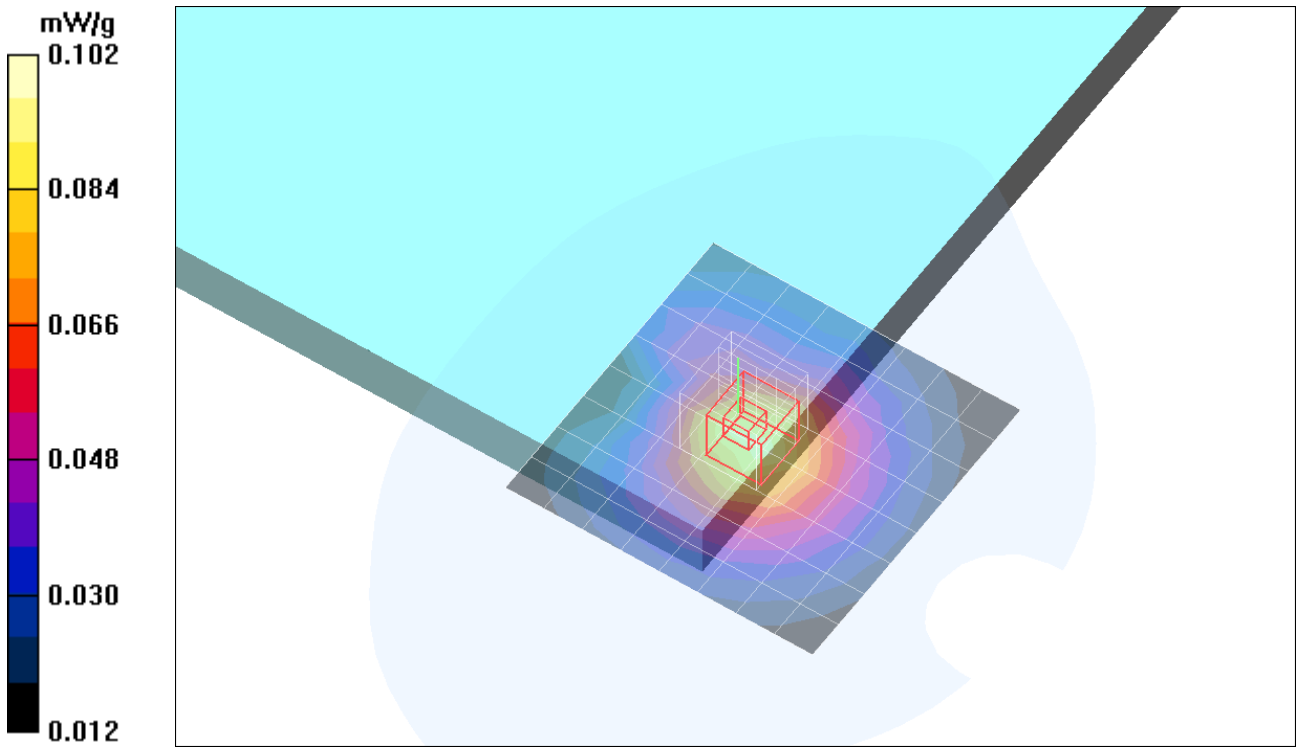

Test Laboratory: Compliance Certification Services

M2 Note-Aluminum Frame-Cell Band

DUT: M2 Note - Aluminum; Type: Host Laptop; Serial: N/A

Communication System: CDMA; Frequency: 848.31 MHz;Duty Cycle: 1:1
Medium parameters used (interpolated): f = 848.31 MHz; σ = 0.968 mho/m; ε_r = 52.6; ρ = 1000 kg/m^3
Phantom section: Flat Section

Room Ambient Temperature: 23.0deg. C; Liquid Temperature: 22.0 deg. C

DASY4 Configuration:
- Area Scan setting - Find Secondary Maximum Within: 2.0 dB and with a peak SAR value greater than 0.0012W/kg
- Probe: EX3DV3 - SN3531; ConvF(10.54, 10.54, 10.54); Calibrated: 7/21/2005
- Sensor-Surface: 4mm (Mechanical Surface Detection)
- Electronics: DAE4 SN558; Calibrated: 1/20/2006
- Phantom: SAM 2; Type: SAM 2; Serial: 1050
- Measurement SW: DASY4, V4.7 Build 21; Postprocessing SW: SEMCAD, V1.8 Build 170

CDMA2000 1xEV-DO ch 777/Area Scan (9x9x1): Measurement grid: dx=15mm, dy=15mm

Info: Interpolated medium parameters used for SAR evaluation.
Maximum value of SAR (measured) = 0.083 mW/g

CDMA2000 1xEV-DO ch 777/Zoom Scan (5x5x7)/Cube 0: Measurement grid: dx=7.5mm, dy=7.5mm, dz=5mm

Reference Value = 9.33 V/m; Power Drift = 0.098 dB
Peak SAR (extrapolated) = 0.125 W/kg
SAR(1 g) = 0.082 mW/g; SAR(10 g) = 0.056 mW/g
Info: Interpolated medium parameters used for SAR evaluation.
Maximum value of SAR (measured) = 0.089 mW/g

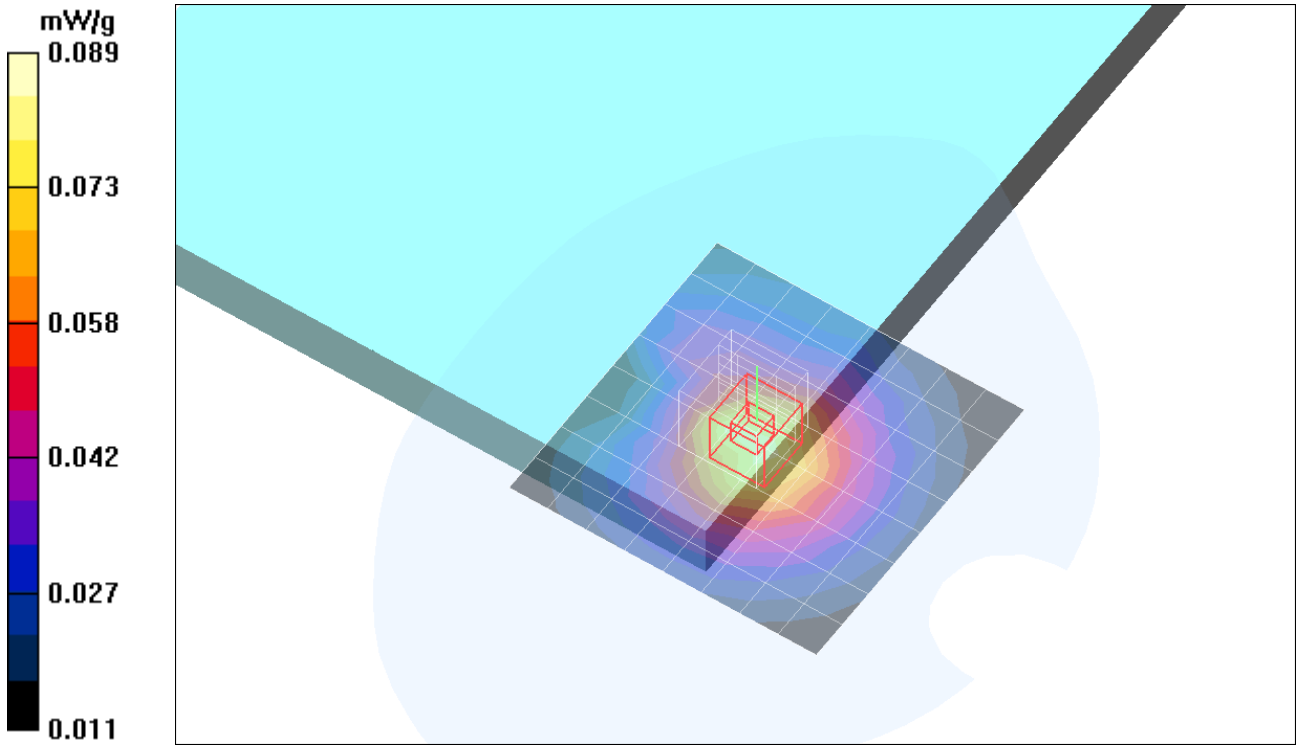

Date/Time: 5/15/2006 2:58:53 PM

Test Laboratory: Compliance Certification Services

M2 Note-Aluminum Frame-Cell Band

DUT: M2 Note - Aluminum; Type: Host Laptop; Serial: N/A

Communication System: CDMA; Frequency: 836.52 MHz;Duty Cycle: 1:1
Medium parameters used (interpolated): f = 836.52 MHz; σ = 0.955 mho/m; ε_r = 52.8; ρ = 1000 kg/m^3
Phantom section: Flat Section

Room Ambient Temperature: 23.0deg. C; Liquid Temperature: 22.0 deg. C

DASY4 Configuration:
- Area Scan setting - Find Secondary Maximum Within: 2.0 dB and with a peak SAR value greater than 0.0012W/kg
- Probe: EX3DV3 - SN3531; ConvF(10.54, 10.54, 10.54); Calibrated: 7/21/2005
- Sensor-Surface: 4mm (Mechanical Surface Detection)
- Electronics: DAE4 SN558; Calibrated: 1/20/2006
- Phantom: SAM 2; Type: SAM 2; Serial: 1050
- Measurement SW: DASY4, V4.7 Build 21; Postprocessing SW: SEMCAD, V1.8 Build 170

CDMA2000 1xEV-DO ch 384 with WLAN/Area Scan (9x9x1): Measurement grid: dx=15mm, dy=15mm
Info: Interpolated medium parameters used for SAR evaluation.
Maximum value of SAR (measured) = 0.095 mW/g

CDMA2000 1xEV-DO ch 384 with WLAN/Zoom Scan (5x5x7)/Cube 0: Measurement grid: dx=7.5mm, dy=7.5mm, dz=5mm
Reference Value = 10.0 V/m; Power Drift = 0.027 dB
Peak SAR (extrapolated) = 0.144 W/kg
SAR(1 g) = 0.095 mW/g; SAR(10 g) = 0.064 mW/g
Info: Interpolated medium parameters used for SAR evaluation.
Maximum value of SAR (measured) = 0.103 mW/g

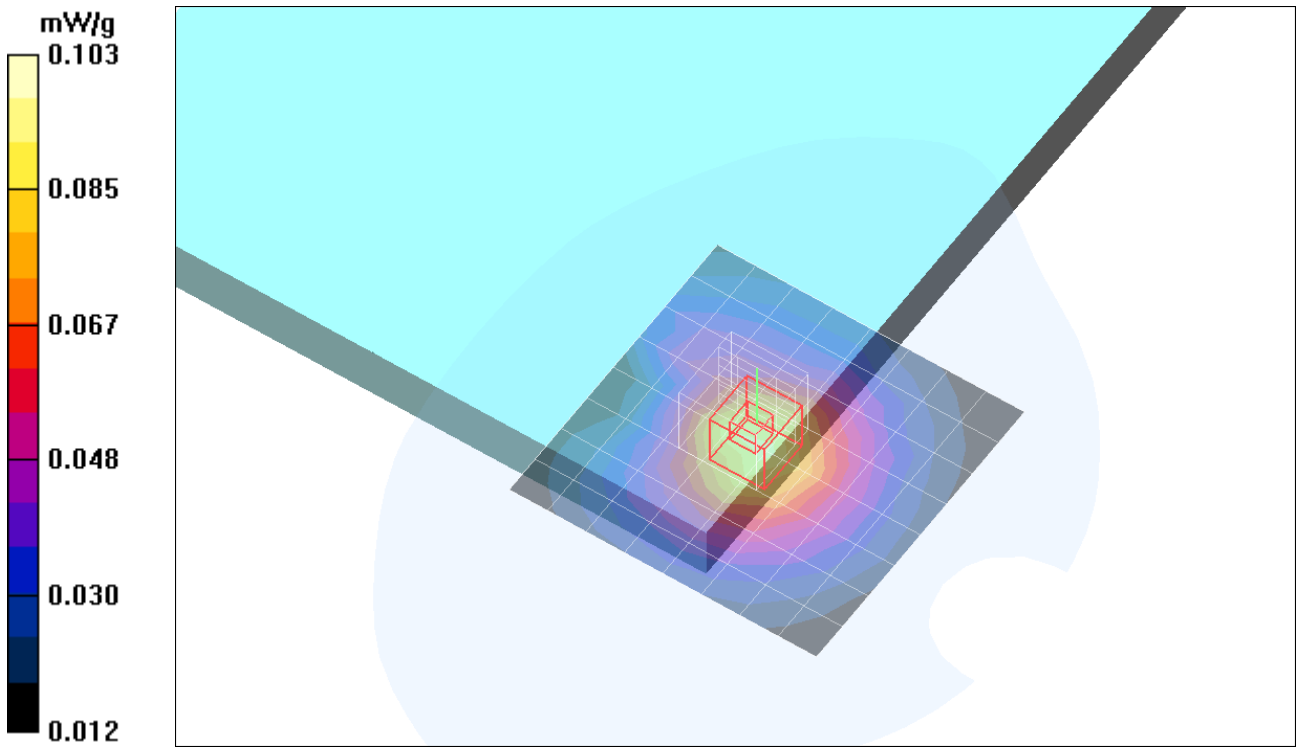

Date/Time: 5/15/2006 3:12:45 PM

Test Laboratory: Compliance Certification Services

M2 Note-Aluminum Frame-Cell Band

DUT: M2 Note - Aluminum; Type: Host Laptop; Serial: N/A

Communication System: CDMA; Frequency: 836.52 MHz;Duty Cycle: 1:1

CDMA2000 1xEV-DO ch 384 with WLAN/Z Scan (1x1x41): Measurement grid: dx=20mm, dy=20mm, dz=2.5mm

Info: Interpolated medium parameters used for SAR evaluation.
Maximum value of SAR (measured) = 0.068 mW/g

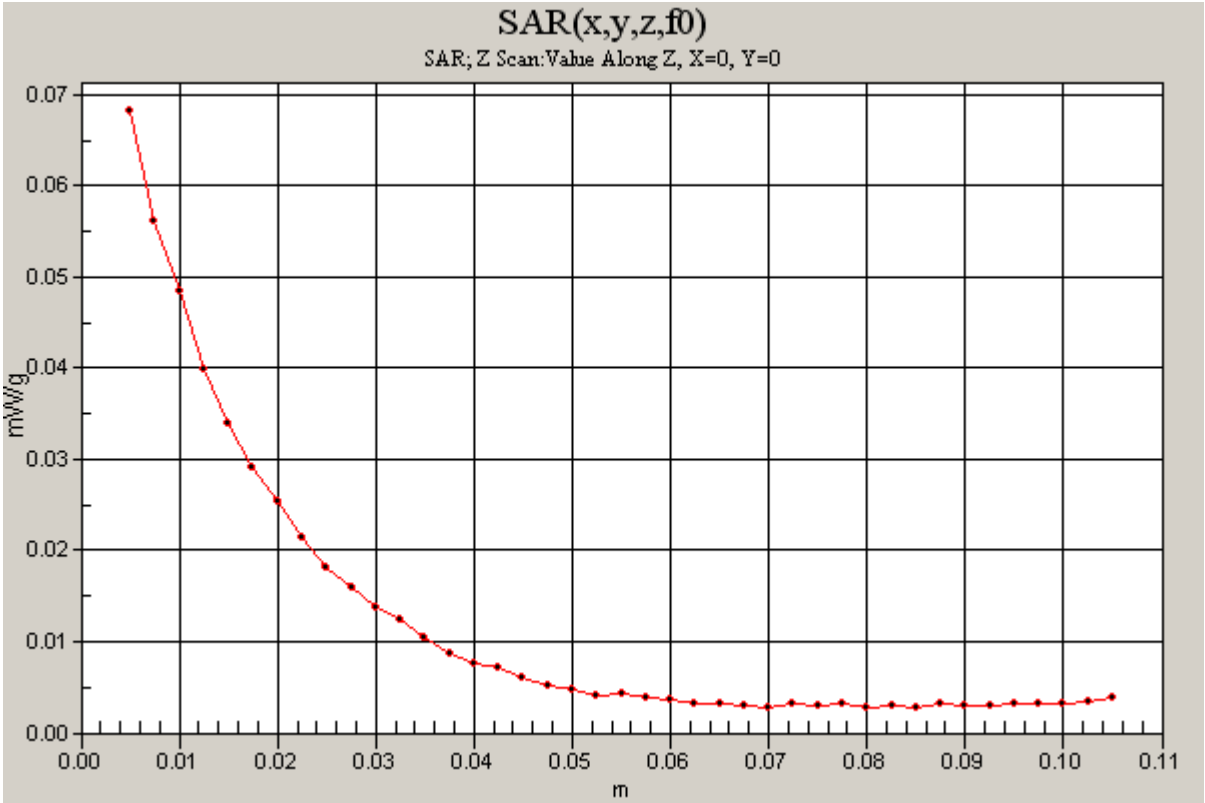

Test Laboratory: Compliance Certification Services

M2 Note-Aluminum Frame-PCS Band

DUT: M2 Note - Aluminum; Type: Host Laptop; Serial: N/A

Communication System: CDMA PCS band; Frequency: 1851.25 MHz;Duty Cycle: 1:1
Medium parameters used (interpolated): f = 1851.25 MHz; σ = 1.44 mho/m; ε_r = 51.6; ρ = 1000 kg/m^3
Phantom section: Flat Section

Room Ambient Temperature: 23.0deg. C; Liquid Temperature: 22.0 deg. C

DASY4 Configuration:
- Area Scan setting - Find Secondary Maximum Within: 2.0 dB and with a peak SAR value greater than 0.0012W/kg
- Probe: EX3DV3 - SN3531; ConvF(8.33, 8.33, 8.33); Calibrated: 7/21/2005
- Sensor-Surface: 4mm (Mechanical Surface Detection)
- Electronics: DAE4 SN558; Calibrated: 1/20/2006
- Phantom: SAM 1; Type: SAM 1; Serial: 1185
- Measurement SW: DASY4, V4.7 Build 21; Postprocessing SW: SEMCAD, V1.8 Build 170

CDMA2000 1xRTT ch 25/Area Scan (7x7x1): Measurement grid: dx=15mm, dy=15mm

Info: Interpolated medium parameters used for SAR evaluation.
Maximum value of SAR (measured) = 0.158 mW/g

CDMA2000 1xRTT ch 25/Zoom Scan (5x5x7)/Cube 0: Measurement grid: dx=7.5mm, dy=7.5mm, dz=5mm

Reference Value = 10.6 V/m; Power Drift = 0.037 dB
Peak SAR (extrapolated) = 0.225 W/kg
SAR(1 g) = 0.152 mW/g; SAR(10 g) = 0.093 mW/g
Info: Interpolated medium parameters used for SAR evaluation.
Maximum value of SAR (measured) = 0.164 mW/g

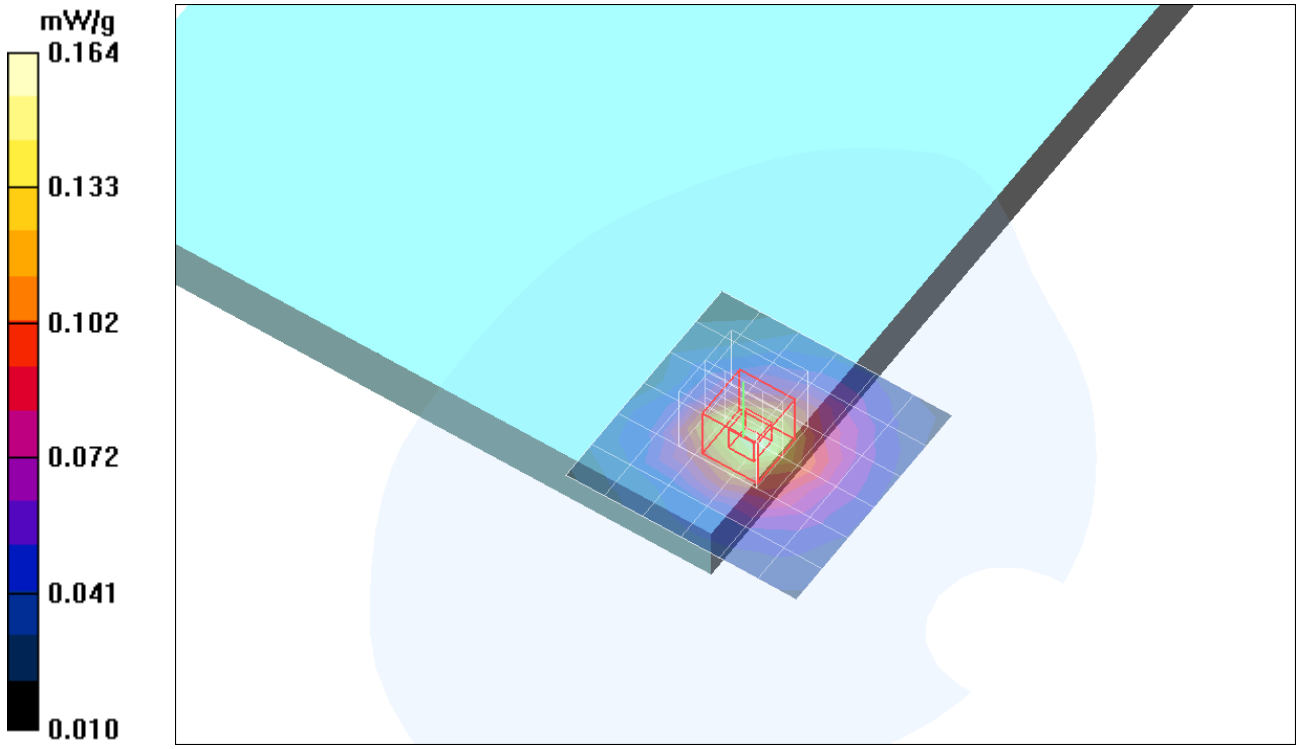

Date/Time: 5/16/2006 12:24:12 PM

Test Laboratory: Compliance Certification Services

M2 Note-Aluminum Frame-PCS Band

DUT: M2 Note - Aluminum; Type: Host Laptop; Serial: N/A

Communication System: CDMA PCS band; Frequency: 1851.25 MHz;Duty Cycle: 1:1

CDMA2000 1xRTT ch 25/Z Scan (1x1x41): Measurement grid: dx=20mm, dy=20mm, dz=2.5mm

Info: Interpolated medium parameters used for SAR evaluation.
Maximum value of SAR (measured) = 0.107 mW/g

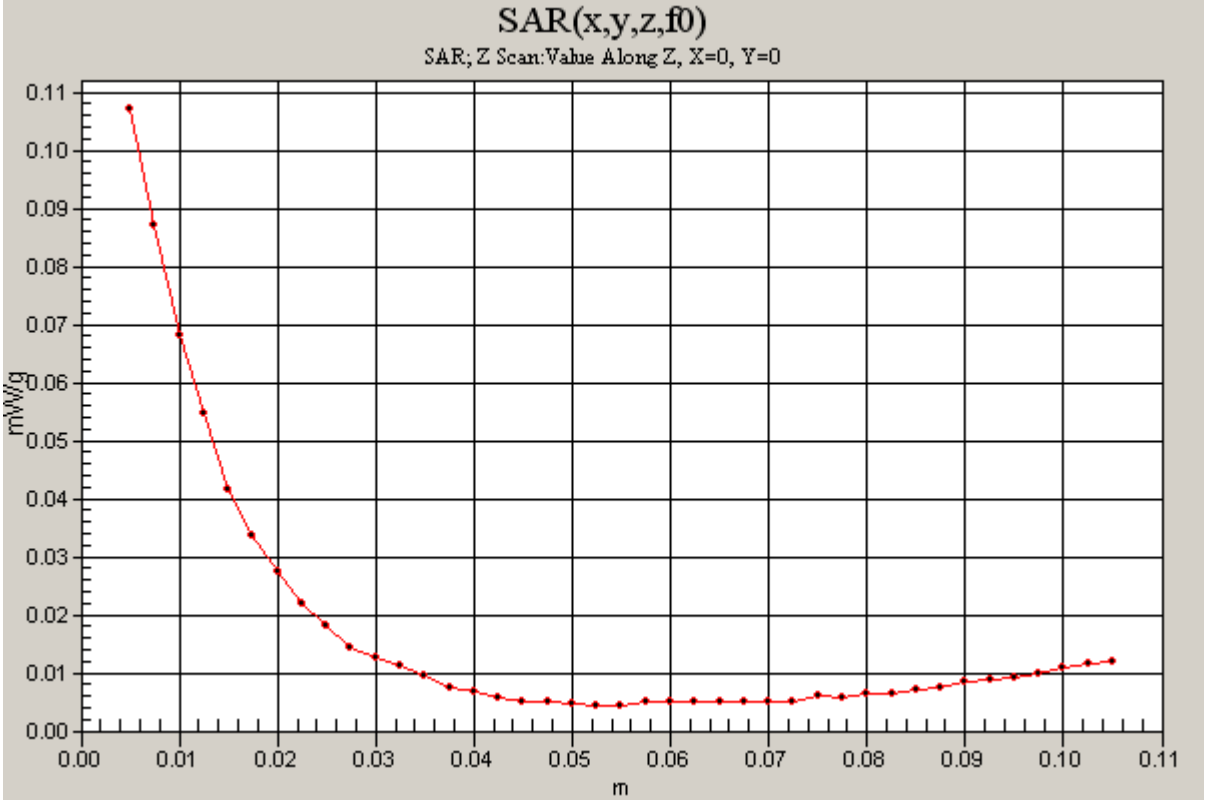

Test Laboratory: Compliance Certification Services

M2 Note-Aluminum Frame-PCS Band

DUT: M2 Note - Aluminum; Type: Host Laptop; Serial: N/A

Communication System: CDMA PCS band; Frequency: 1880 MHz;Duty Cycle: 1:1
Medium parameters used: f = 1880 MHz; σ = 1.48 mho/m; ε_r = 51.5; ρ = 1000 kg/m^3
Phantom section: Flat Section

Room Ambient Temperature: 23.0deg. C; Liquid Temperature: 22.0 deg. C

DASY4 Configuration:
- Area Scan setting - Find Secondary Maximum Within: 2.0 dB and with a peak SAR value greater than 0.0012W/kg
- Probe: EX3DV3 - SN3531; ConvF(8.33, 8.33, 8.33); Calibrated: 7/21/2005
- Sensor-Surface: 4mm (Mechanical Surface Detection)
- Electronics: DAE4 SN558; Calibrated: 1/20/2006
- Phantom: SAM 1; Type: SAM 1; Serial: 1185
- Measurement SW: DASY4, V4.7 Build 21; Postprocessing SW: SEMCAD, V1.8 Build 170

CDMA2000 1xRTT ch 600/Area Scan (7x7x1): Measurement grid: dx=15mm, dy=15mm
Maximum value of SAR (measured) = 0.113 mW/g

CDMA2000 1xRTT ch 600/Zoom Scan (5x5x7)/Cube 0: Measurement grid: dx=7.5mm, dy=7.5mm, dz=5mm
Reference Value = 8.97 V/m; Power Drift = -0.140 dB
Peak SAR (extrapolated) = 0.162 W/kg
SAR(1 g) = 0.106 mW/g; SAR(10 g) = 0.065 mW/g
Maximum value of SAR (measured) = 0.114 mW/g

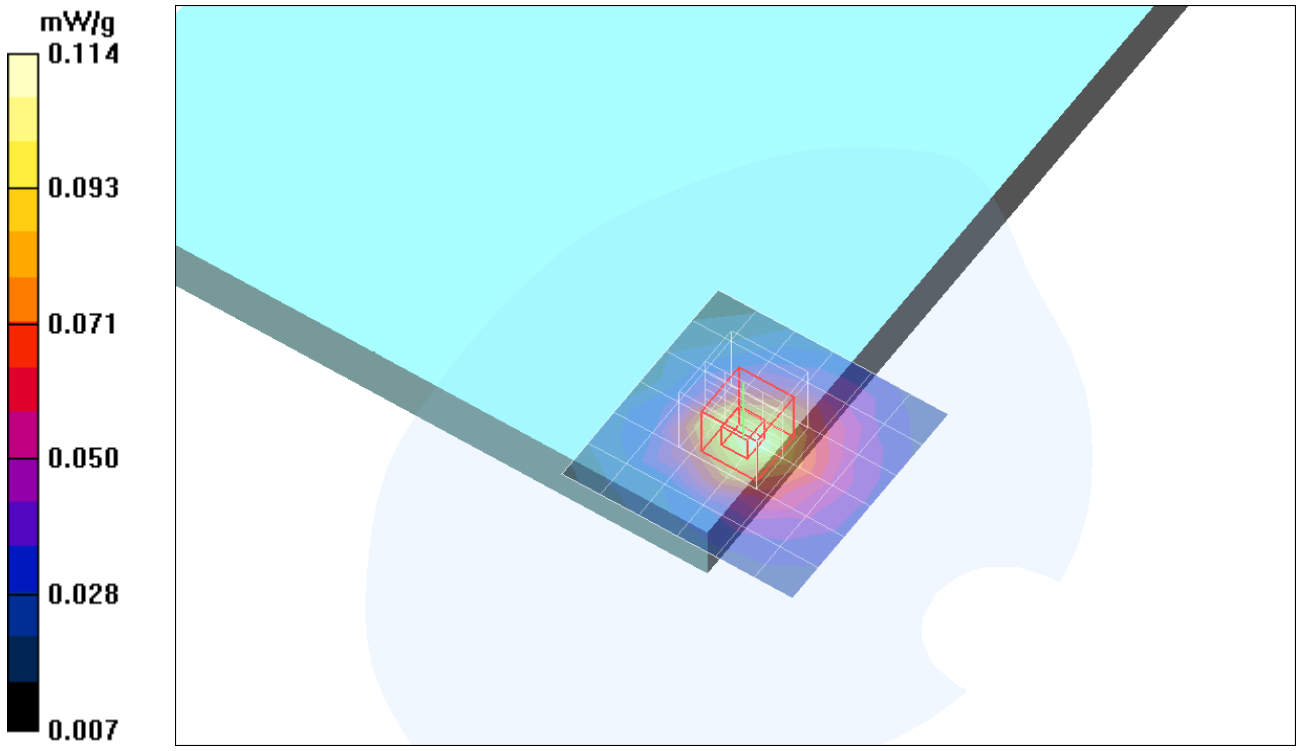

Test Laboratory: Compliance Certification Services

M2 Note-Aluminum Frame-PCS Band

DUT: M2 Note - Aluminum; Type: Host Laptop; Serial: N/A

Communication System: CDMA PCS band; Frequency: 1908.75 MHz;Duty Cycle: 1:1
Medium parameters used (interpolated): f = 1908.75 MHz; σ = 1.51 mho/m; ε_r = 51.4; ρ = 1000 kg/m^3
Phantom section: Flat Section

Room Ambient Temperature: 23.0deg. C; Liquid Temperature: 22.0 deg. C

DASY4 Configuration:
- Area Scan setting - Find Secondary Maximum Within: 2.0 dB and with a peak SAR value greater than 0.0012W/kg
- Probe: EX3DV3 - SN3531; ConvF(8.33, 8.33, 8.33); Calibrated: 7/21/2005
- Sensor-Surface: 4mm (Mechanical Surface Detection)
- Electronics: DAE4 SN558; Calibrated: 1/20/2006
- Phantom: SAM 1; Type: SAM 1; Serial: 1185
- Measurement SW: DASY4, V4.7 Build 21; Postprocessing SW: SEMCAD, V1.8 Build 170

CDMA2000 1xRTT ch 1175/Area Scan (7x7x1): Measurement grid: dx=15mm, dy=15mm
Info: Interpolated medium parameters used for SAR evaluation.
Maximum value of SAR (measured) = 0.114 mW/g

CDMA2000 1xRTT ch 1175/Zoom Scan (5x5x7)/Cube 0: Measurement grid: dx=7.5mm, dy=7.5mm, dz=5mm
Reference Value = 8.99 V/m; Power Drift = 0.055 dB
Peak SAR (extrapolated) = 0.167 W/kg
SAR(1 g) = 0.110 mW/g; SAR(10 g) = 0.067 mW/g
Info: Interpolated medium parameters used for SAR evaluation.
Maximum value of SAR (measured) = 0.118 mW/g

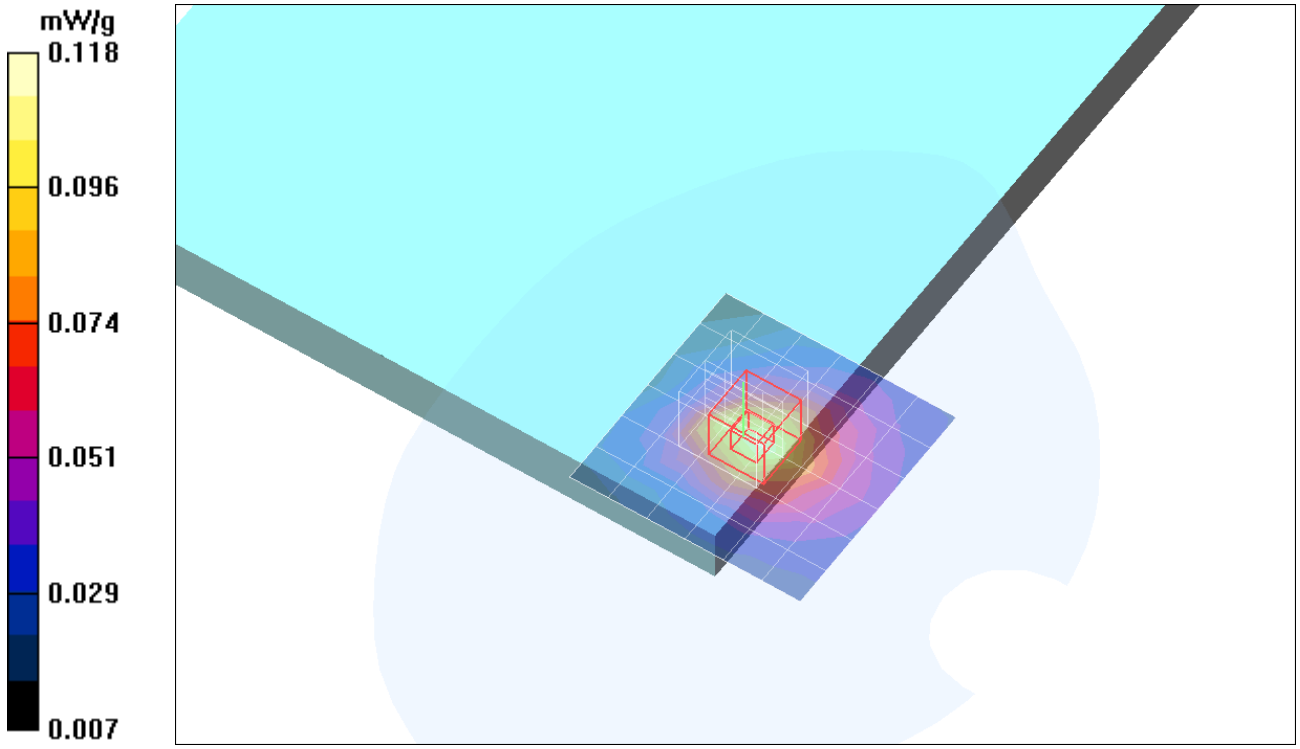

Test Laboratory: Compliance Certification Services

M2 Note-Aluminum Frame-PCS Band

DUT: M2 Note - Aluminum; Type: Host Laptop; Serial: N/A

Communication System: CDMA PCS band; Frequency: 1851.25 MHz;Duty Cycle: 1:1
Medium parameters used (interpolated): f = 1851.25 MHz; σ = 1.44 mho/m; ε_r = 51.6; ρ = 1000 kg/m^3
Phantom section: Flat Section

Room Ambient Temperature: 23.0deg. C; Liquid Temperature: 22.0 deg. C

DASY4 Configuration:
- Area Scan setting - Find Secondary Maximum Within: 2.0 dB and with a peak SAR value greater than 0.0012W/kg
- Probe: EX3DV3 - SN3531; ConvF(8.33, 8.33, 8.33); Calibrated: 7/21/2005
- Sensor-Surface: 4mm (Mechanical Surface Detection)
- Electronics: DAE4 SN558; Calibrated: 1/20/2006
- Phantom: SAM 1; Type: SAM 1; Serial: 1185
- Measurement SW: DASY4, V4.7 Build 21; Postprocessing SW: SEMCAD, V1.8 Build 170

CDMA2000 1xRTT ch 25 with WLAN/Area Scan (7x7x1): Measurement grid: dx=15mm, dy=15mm
Info: Interpolated medium parameters used for SAR evaluation.
Maximum value of SAR (measured) = 0.159 mW/g

CDMA2000 1xRTT ch 25 with WLAN/Zoom Scan (5x5x7)/Cube 0: Measurement grid: dx=7.5mm, dy=7.5mm, dz=5mm
Reference Value = 10.5 V/m; Power Drift = 0.190 dB
Peak SAR (extrapolated) = 0.217 W/kg
SAR(1 g) = 0.150 mW/g; SAR(10 g) = 0.093 mW/g
Info: Interpolated medium parameters used for SAR evaluation.
Maximum value of SAR (measured) = 0.160 mW/g

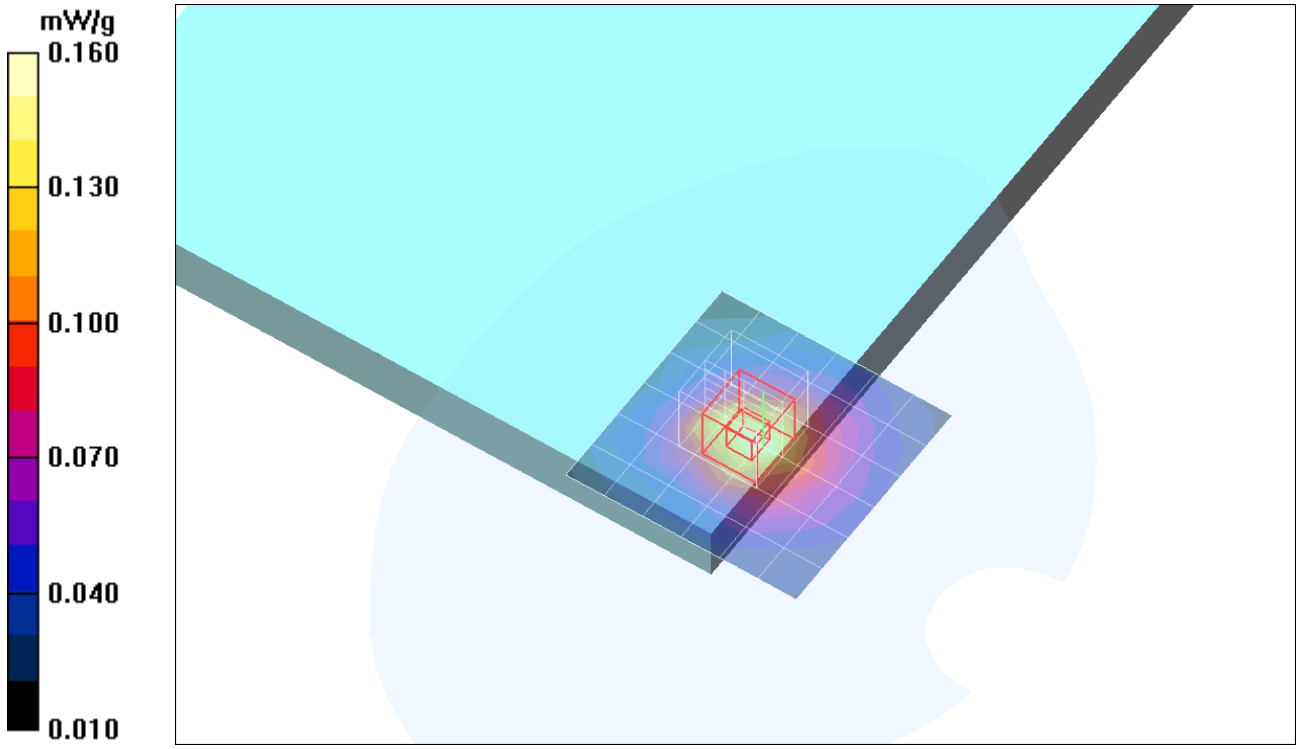

Test Laboratory: Compliance Certification Services

M2 Note-Aluminum Frame-PCS Band

DUT: M2 Note - Aluminum; Type: Host Laptop; Serial: N/A

Communication System: CDMA PCS band; Frequency: 1851.25 MHz;Duty Cycle: 1:1
Medium parameters used (interpolated): f = 1851.25 MHz; σ = 1.44 mho/m; ε_r = 51.6; ρ = 1000 kg/m^3
Phantom section: Flat Section

Room Ambient Temperature: 23.0deg. C; Liquid Temperature: 22.0 deg. C

DASY4 Configuration:
- Area Scan setting - Find Secondary Maximum Within: 2.0 dB and with a peak SAR value greater than 0.0012W/kg
- Probe: EX3DV3 - SN3531; ConvF(8.33, 8.33, 8.33); Calibrated: 7/21/2005
- Sensor-Surface: 4mm (Mechanical Surface Detection)
- Electronics: DAE4 SN558; Calibrated: 1/20/2006
- Phantom: SAM 1; Type: SAM 1; Serial: 1185
- Measurement SW: DASY4, V4.7 Build 21; Postprocessing SW: SEMCAD, V1.8 Build 170

CDMA2000 1xEV-DO ch 25/Area Scan (7x7x1): Measurement grid: dx=15mm, dy=15mm

Info: Interpolated medium parameters used for SAR evaluation.
Maximum value of SAR (measured) = 0.167 mW/g

CDMA2000 1xEV-DO ch 25/Zoom Scan (5x5x7)/Cube 0: Measurement grid: dx=7.5mm, dy=7.5mm, dz=5mm

Reference Value = 10.8 V/m; Power Drift = -0.113 dB
Peak SAR (extrapolated) = 0.234 W/kg
SAR(1 g) = 0.154 mW/g; SAR(10 g) = 0.095 mW/g
Info: Interpolated medium parameters used for SAR evaluation.
Maximum value of SAR (measured) = 0.168 mW/g

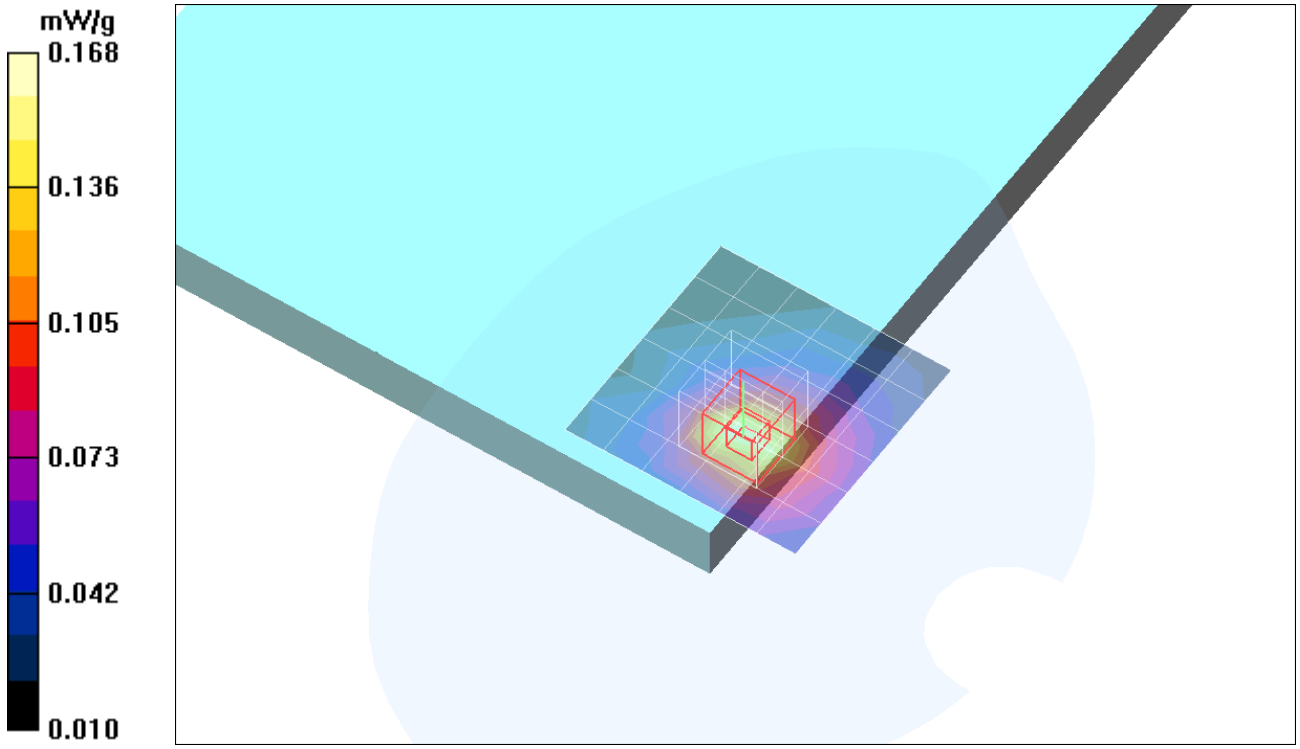

Test Laboratory: Compliance Certification Services

M2 Note-Aluminum Frame-PCS Band

DUT: M2 Note - Aluminum; Type: Host Laptop; Serial: N/A

Communication System: CDMA PCS band; Frequency: 1880 MHz;Duty Cycle: 1:1
Medium parameters used: f = 1880 MHz; σ = 1.48 mho/m; ε_r = 51.5; ρ = 1000 kg/m^3
Phantom section: Flat Section

Room Ambient Temperature: 23.0deg. C; Liquid Temperature: 22.0 deg. C

DASY4 Configuration:
- Area Scan setting - Find Secondary Maximum Within: 2.0 dB and with a peak SAR value greater than 0.0012W/kg
- Probe: EX3DV3 - SN3531; ConvF(8.33, 8.33, 8.33); Calibrated: 7/21/2005
- Sensor-Surface: 4mm (Mechanical Surface Detection)
- Electronics: DAE4 SN558; Calibrated: 1/20/2006
- Phantom: SAM 1; Type: SAM 1; Serial: 1185
- Measurement SW: DASY4, V4.7 Build 21; Postprocessing SW: SEMCAD, V1.8 Build 170

CDMA2000 1xEV-DO ch 600/Area Scan (7x7x1): Measurement grid: dx=15mm, dy=15mm
Maximum value of SAR (measured) = 0.130 mW/g

CDMA2000 1xEV-DO ch 600/Zoom Scan (5x5x7)/Cube 0: Measurement grid: dx=7.5mm, dy=7.5mm, dz=5mm
Reference Value = 8.97 V/m; Power Drift = -0.078 dB
Peak SAR (extrapolated) = 0.167 W/kg
SAR(1 g) = 0.110 mW/g; SAR(10 g) = 0.068 mW/g
Maximum value of SAR (measured) = 0.118 mW/g

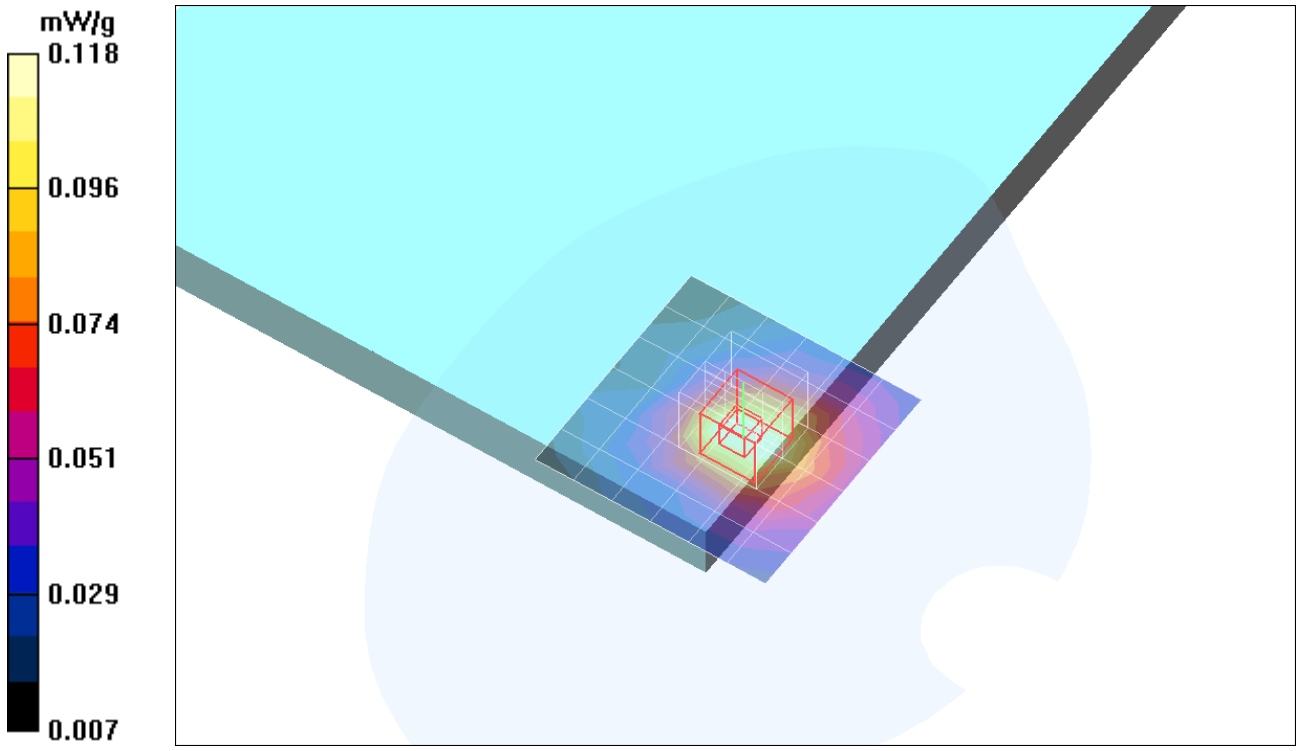

Test Laboratory: Compliance Certification Services

M2 Note-Aluminum Frame-PCS Band

DUT: M2 Note - Aluminum; Type: Host Laptop; Serial: N/A

Communication System: CDMA PCS band; Frequency: 1908.75 MHz;Duty Cycle: 1:1
Medium parameters used (interpolated): f = 1908.75 MHz; σ = 1.51 mho/m; ε_r = 51.4; ρ = 1000 kg/m^3
Phantom section: Flat Section

Room Ambient Temperature: 23.0deg. C; Liquid Temperature: 22.0 deg. C

DASY4 Configuration:
- Area Scan setting - Find Secondary Maximum Within: 2.0 dB and with a peak SAR value greater than 0.0012W/kg
- Probe: EX3DV3 - SN3531; ConvF(8.33, 8.33, 8.33); Calibrated: 7/21/2005
- Sensor-Surface: 4mm (Mechanical Surface Detection)
- Electronics: DAE4 SN558; Calibrated: 1/20/2006
- Phantom: SAM 1; Type: SAM 1; Serial: 1185
- Measurement SW: DASY4, V4.7 Build 21; Postprocessing SW: SEMCAD, V1.8 Build 170

CDMA2000 1xEV-DO ch 1175/Area Scan (7x7x1): Measurement grid: dx=15mm, dy=15mm

Info: Interpolated medium parameters used for SAR evaluation.
Maximum value of SAR (measured) = 0.118 mW/g

CDMA2000 1xEV-DO ch 1175/Zoom Scan (5x5x7)/Cube 0: Measurement grid: dx=7.5mm, dy=7.5mm, dz=5mm

Reference Value = 9.13 V/m; Power Drift = -0.019 dB
Peak SAR (extrapolated) = 0.176 W/kg
SAR(1 g) = 0.114 mW/g; SAR(10 g) = 0.069 mW/g
Info: Interpolated medium parameters used for SAR evaluation.
Maximum value of SAR (measured) = 0.126 mW/g

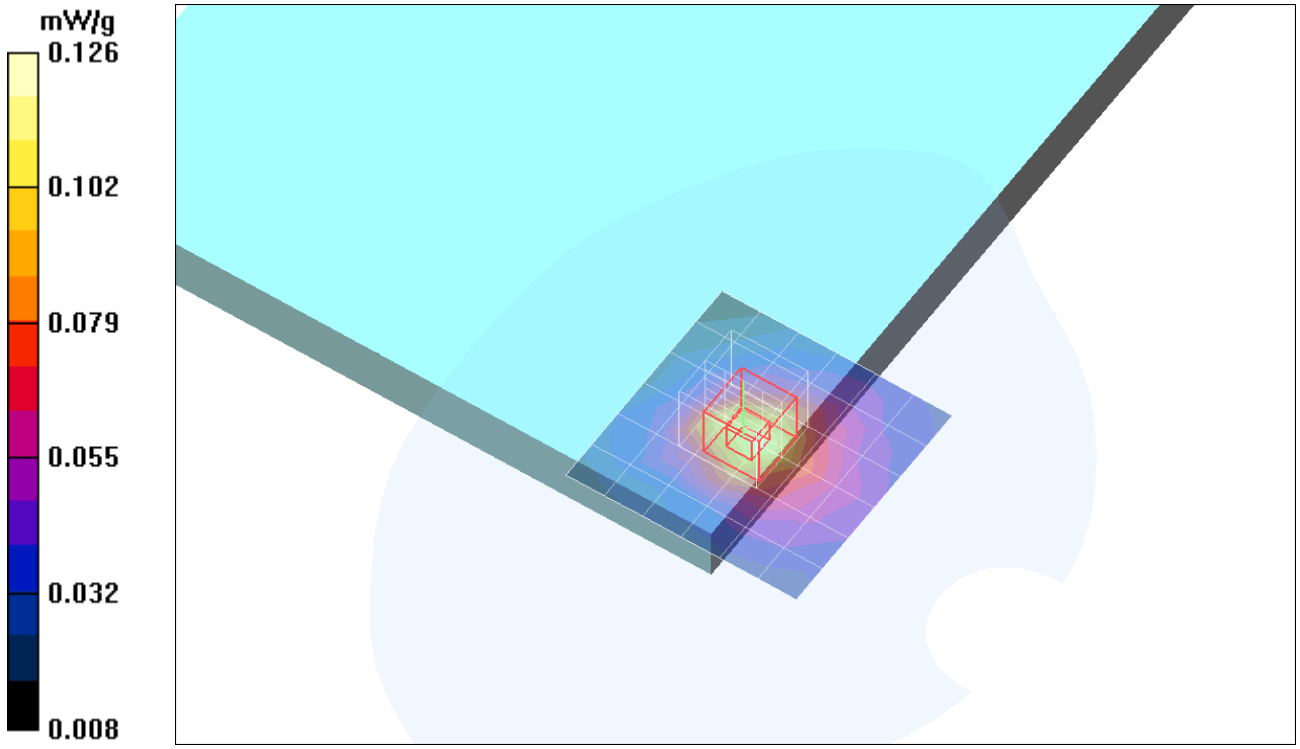

Date/Time: 5/16/2006 11:45:13 AM

Test Laboratory: Compliance Certification Services

M2 Note-Aluminum Frame-PCS Band

DUT: M2 Note - Aluminum; Type: Host Laptop; Serial: N/A

Communication System: CDMA PCS band; Frequency: 1851.25 MHz;Duty Cycle: 1:1
Medium parameters used (interpolated): f = 1851.25 MHz; σ = 1.44 mho/m; ε_r = 51.6; ρ = 1000 kg/m^3
Phantom section: Flat Section

Room Ambient Temperature: 23.0deg. C; Liquid Temperature: 22.0 deg. C

DASY4 Configuration:
- Area Scan setting - Find Secondary Maximum Within: 2.0 dB and with a peak SAR value greater than 0.0012W/kg
- Probe: EX3DV3 - SN3531; ConvF(8.33, 8.33, 8.33); Calibrated: 7/21/2005
- Sensor-Surface: 4mm (Mechanical Surface Detection)
- Electronics: DAE4 SN558; Calibrated: 1/20/2006
- Phantom: SAM 1; Type: SAM 1; Serial: 1185
- Measurement SW: DASY4, V4.7 Build 21; Postprocessing SW: SEMCAD, V1.8 Build 170

CDMA2000 1xEV-DO ch 25 with WLAN/Area Scan (7x7x1): Measurement grid: dx=15mm, dy=15mm

Info: Interpolated medium parameters used for SAR evaluation.
Maximum value of SAR (measured) = 0.169 mW/g

CDMA2000 1xEV-DO ch 25 with WLAN/Zoom Scan (5x5x7)/Cube 0: Measurement grid: dx=7.5mm, dy=7.5mm, dz=5mm

Reference Value = 11.1 V/m; Power Drift = -0.177 dB
Peak SAR (extrapolated) = 0.244 W/kg
SAR(1 g) = 0.160 mW/g; SAR(10 g) = 0.098 mW/g
Info: Interpolated medium parameters used for SAR evaluation.
Maximum value of SAR (measured) = 0.171 mW/g

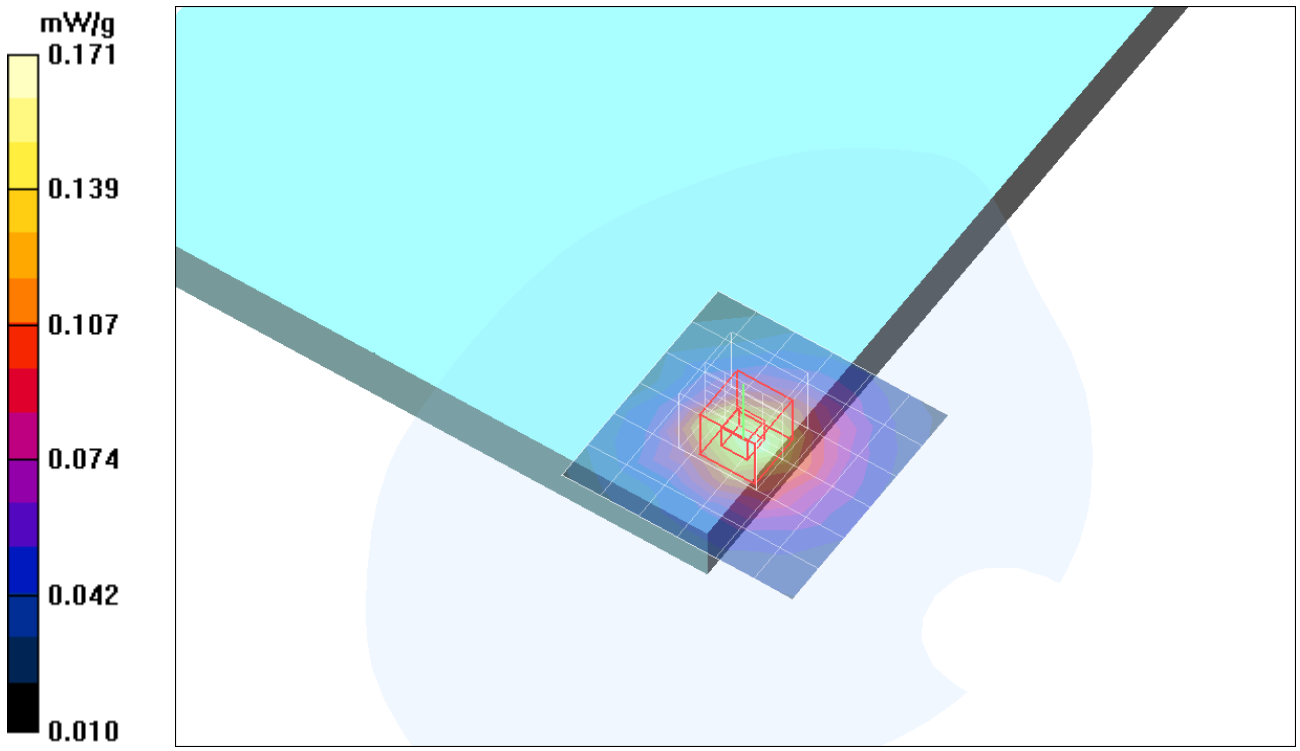

Date/Time: 5/16/2006 11:55:45 AM

Test Laboratory: Compliance Certification Services

M2 Note-Aluminum Frame-PCS Band

DUT: M2 Note - Aluminum; Type: Host Laptop; Serial: N/A

Communication System: CDMA PCS band; Frequency: 1851.25 MHz;Duty Cycle: 1:1

CDMA2000 1xEV-DO ch 25 with WLAN/Z Scan (1x1x41): Measurement grid: dx=20mm, dy=20mm, dz=2.5mm
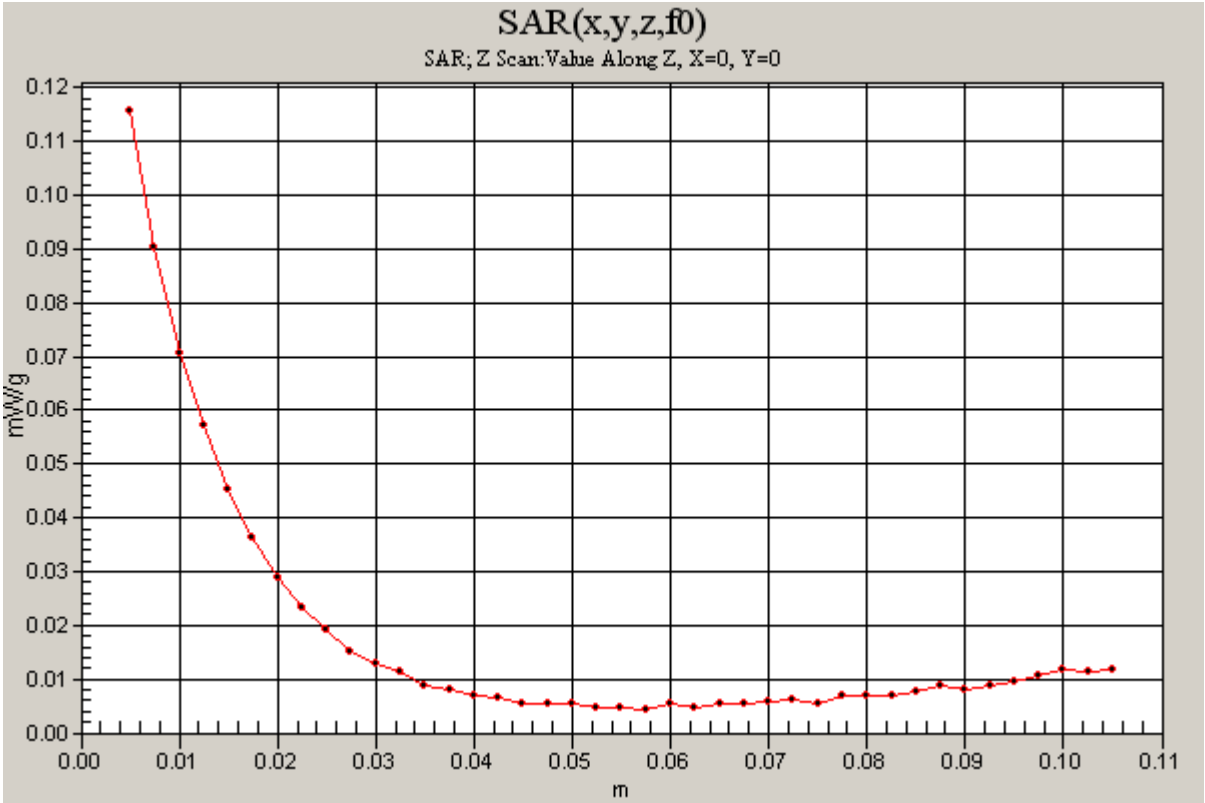
Info: Interpolated medium parameters used for SAR evaluation.
Maximum value of SAR (measured) = 0.116 mW/g