Test Laboratory: Compliance Certification Services

Cell Band

DUT: PCMCIA Modem Card CDMA; Type: PCMCIA; Serial: 005

Communication System: CDMA; Frequency: 824.7 MHz;Duty Cycle: 1:1
Medium parameters used: f = 825 MHz; σ = 0.945 mho/m; ε_r = 53.1; ρ = 1000 kg/m^3
Phantom section: Flat Section

Room Ambient Temperature: 23.0deg. C; Liquid Temperature: 21.6 deg. C

DASY4 Configuration:
- Area Scan setting - Find Secondary Maximum Within: 2.0 dB and with a peak SAR value greater than 0.0012W/kg
- Probe: EX3DV3 - SN3531; ConvF(10.54, 10.54, 10.54); Calibrated: 7/21/2005
- Sensor-Surface: 4mm (Mechanical Surface Detection)
- Electronics: DAE4 SN558; Calibrated: 1/20/2006
- Phantom: SAM 2; Type: SAM 2; Serial: 1050
- Measurement SW: DASY4, V4.6 Build 23; Postprocessing SW: SEMCAD, V1.8 Build 161

Toshiba Satellite CDMA ch 1013/Area Scan (7x7x1): Measurement grid: dx=15mm, dy=15mm
Maximum value of SAR (measured) = 0.989 mW/g

Toshiba Satellite CDMA ch 1013/Zoom Scan (5x5x7)/Cube 0: Measurement grid: dx=7.5mm, dy=7.5mm, dz=5mm
Reference Value = 25.8 V/m; Power Drift = -0.165 dB
Peak SAR (extrapolated) = 1.37 W/kg
SAR(1 g) = 0.992 mW/g; SAR(10 g) = 0.667 mW/g
Maximum value of SAR (measured) = 1.07 mW/g

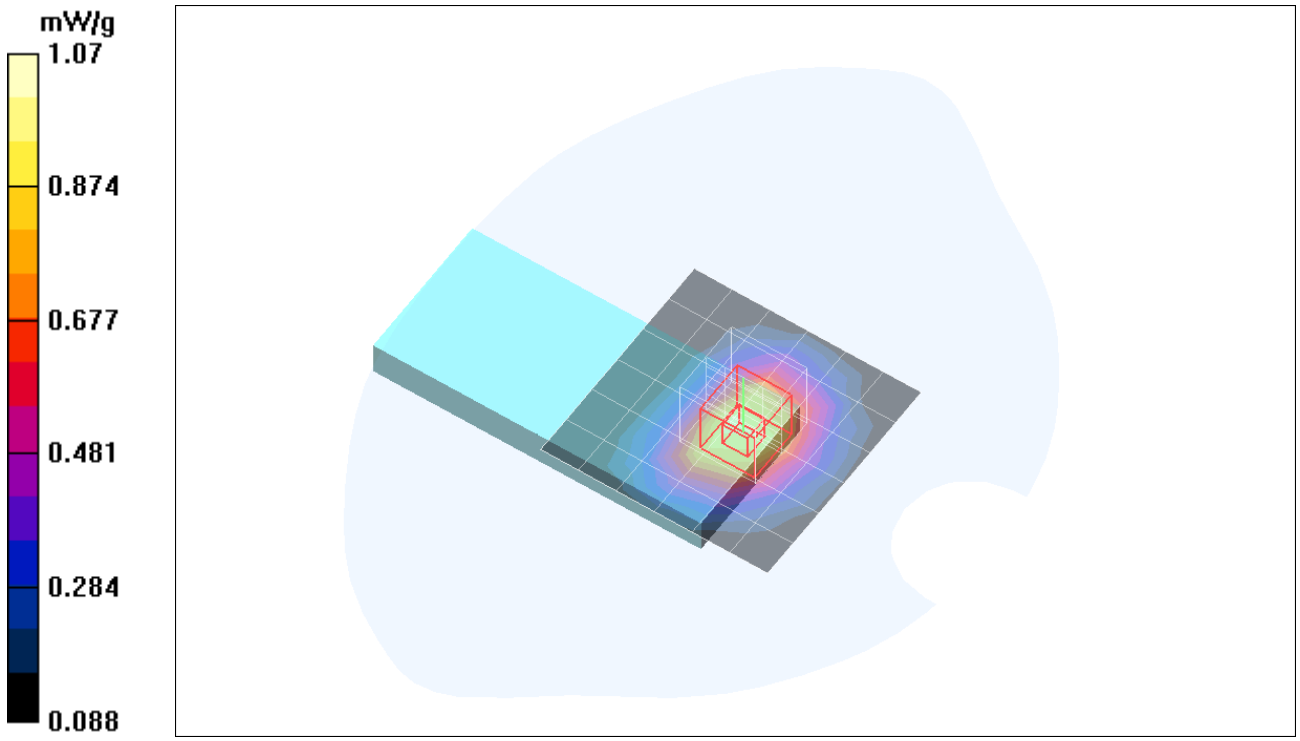

Test Laboratory: Compliance Certification Services

Cell Band

DUT: PCMCIA Modem Card CDMA; Type: PCMCIA; Serial: 005

Communication System: CDMA; Frequency: 836.52 MHz;Duty Cycle: 1:1
Medium parameters used (interpolated): f = 836.52 MHz; σ = 0.956 mho/m; ε_r = 53; ρ = 1000 kg/m^3
Phantom section: Flat Section

Room Ambient Temperature: 23.0deg. C; Liquid Temperature: 21.6deg. C

DASY4 Configuration:
- Area Scan setting - Find Secondary Maximum Within: 2.0 dB and with a peak SAR value greater than 0.0012W/kg
- Probe: EX3DV3 - SN3531; ConvF(10.54, 10.54, 10.54); Calibrated: 7/21/2005
- Sensor-Surface: 4mm (Mechanical Surface Detection)
- Electronics: DAE4 SN558; Calibrated: 1/20/2006
- Phantom: SAM 2; Type: SAM 2; Serial: 1050
- Measurement SW: DASY4, V4.6 Build 23; Postprocessing SW: SEMCAD, V1.8 Build 161

Toshiba Satellite CDMA ch 384/Area Scan (7x7x1): Measurement grid: dx=15mm, dy=15mm
Info: Interpolated medium parameters used for SAR evaluation.
Maximum value of SAR (measured) = 1.14 mW/g

Toshiba Satellite CDMA ch 384/Zoom Scan (5x5x7)/Cube 0: Measurement grid: dx=7.5mm, dy=7.5mm, dz=5mm
Reference Value = 25.9 V/m; Power Drift = -0.190 dB
Peak SAR (extrapolated) = 1.61 W/kg
SAR(1 g) = 1.15 mW/g; SAR(10 g) = 0.772 mW/g
Info: Interpolated medium parameters used for SAR evaluation.
Maximum value of SAR (measured) = 1.24 mW/g

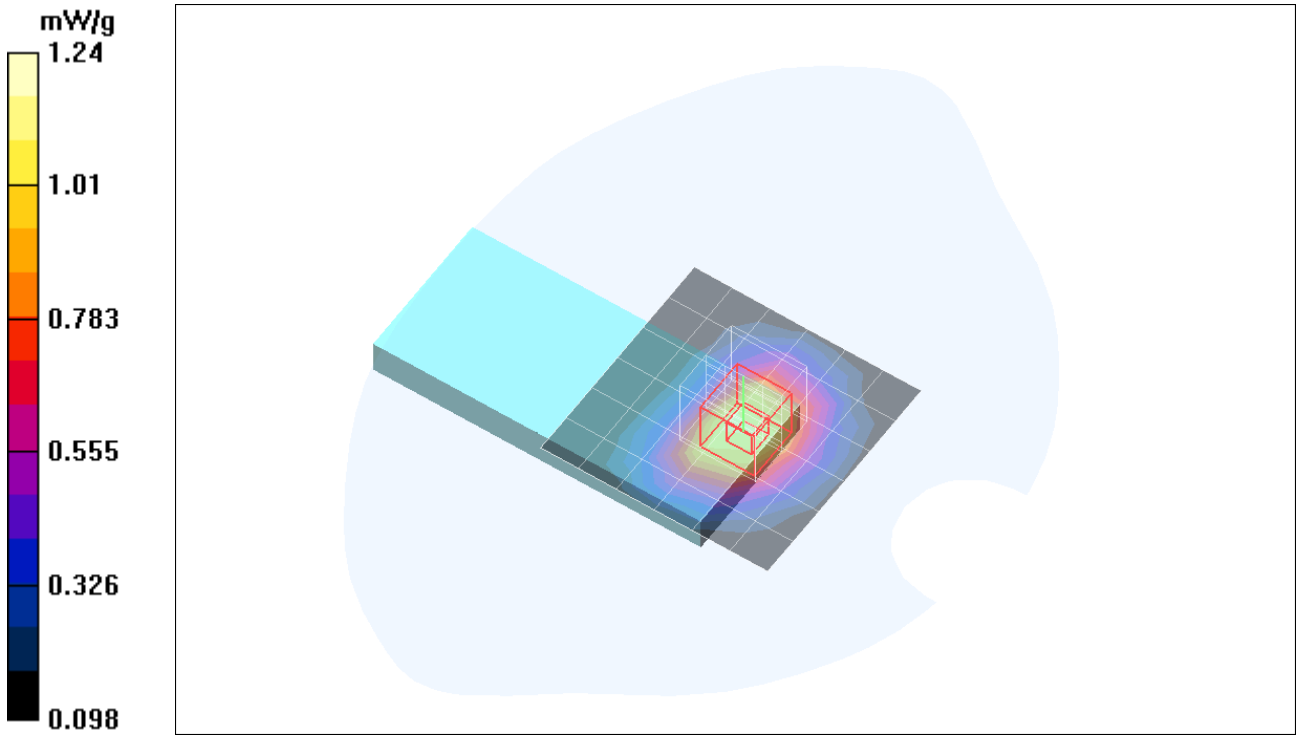

Test Laboratory: Compliance Certification Services

Cell Band

DUT: PCMCIA Modem Card CDMA; Type: PCMCIA; Serial: 005

Communication System: CDMA; Frequency: 848.31 MHz;Duty Cycle: 1:1
Medium parameters used (interpolated): f = 848.31 MHz; σ = 0.968 mho/m; ε_r = 52.9; ρ = 1000 kg/m^3
Phantom section: Flat Section

Room Ambient Temperature: 23.0deg. C; Liquid Temperature: 21.6 deg. C

DASY4 Configuration:
- Area Scan setting - Find Secondary Maximum Within: 2.0 dB and with a peak SAR value greater than 0.0012W/kg
- Probe: EX3DV3 - SN3531; ConvF(10.54, 10.54, 10.54); Calibrated: 7/21/2005
- Sensor-Surface: 4mm (Mechanical Surface Detection)
- Electronics: DAE4 SN558; Calibrated: 1/20/2006
- Phantom: SAM 2; Type: SAM 2; Serial: 1050
- Measurement SW: DASY4, V4.6 Build 23; Postprocessing SW: SEMCAD, V1.8 Build 161

Toshiba Satellite CDMA ch 777/Area Scan (7x7x1): Measurement grid: dx=15mm, dy=15mm
Info: Interpolated medium parameters used for SAR evaluation.
Maximum value of SAR (measured) = 0.814 mW/g

Toshiba Satellite CDMA ch 777/Zoom Scan (5x5x7)/Cube 0: Measurement grid: dx=7.5mm, dy=7.5mm, dz=5mm
Reference Value = 21.6 V/m; Power Drift = -0.160 dB
Peak SAR (extrapolated) = 1.17 W/kg
SAR(1 g) = 0.833 mW/g; SAR(10 g) = 0.558 mW/g
Info: Interpolated medium parameters used for SAR evaluation.
Maximum value of SAR (measured) = 0.891 mW/g

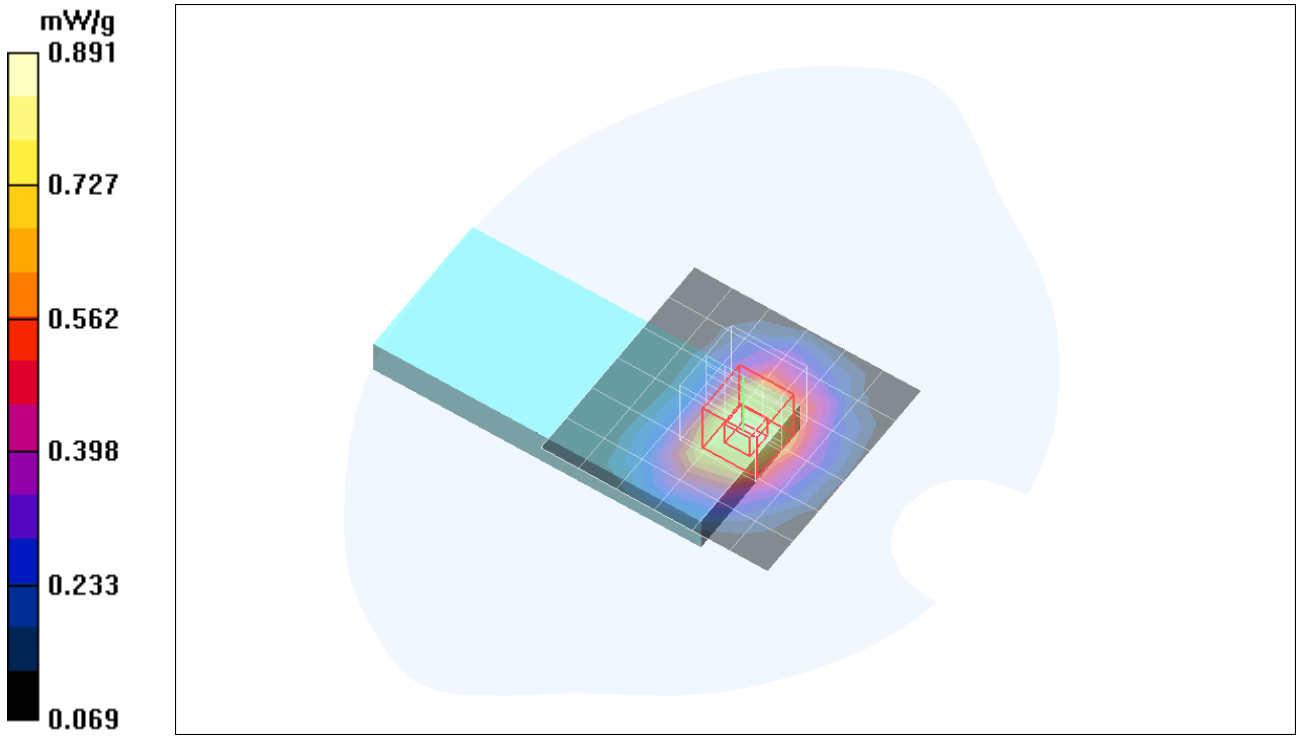

Date/Time: 5/4/2006 6:37:05 PM

Test Laboratory: Compliance Certification Services

Cell Band

DUT: PCMCIA Modem Card CDMA; Type: PCMCIA; Serial: 005

Communication System: CDMA; Frequency: 824.7 MHz;Duty Cycle: 1:1
Medium parameters used: f = 825 MHz; σ = 0.945 mho/m; ε_r = 53.1; ρ = 1000 kg/m^3
Phantom section: Flat Section

Room Ambient Temperature: 23.0deg. C; Liquid Temperature: 21.6 deg. C

DASY4 Configuration:
- Area Scan setting - Find Secondary Maximum Within: 2.0 dB and with a peak SAR value greater than 0.0012W/kg
- Probe: EX3DV3 - SN3531; ConvF(10.54, 10.54, 10.54); Calibrated: 7/21/2005
- Sensor-Surface: 4mm (Mechanical Surface Detection)
- Electronics: DAE4 SN558; Calibrated: 1/20/2006
- Phantom: SAM 2; Type: SAM 2; Serial: 1050
- Measurement SW: DASY4, V4.6 Build 23; Postprocessing SW: SEMCAD, V1.8 Build 161

HP Pavilion dv4000 CDMA ch 1013/Area Scan (7x7x1): Measurement grid: dx=15mm, dy=15mm
Maximum value of SAR (measured) = 1.09 mW/g

HP Pavilion dv4000 CDMA ch 1013/Zoom Scan (5x5x7)/Cube 0: Measurement grid: dx=7.5mm, dy=7.5mm, dz=5mm
Reference Value = 33.9 V/m; Power Drift = -0.184 dB
Peak SAR (extrapolated) = 1.46 W/kg
SAR(1 g) = 1.05 mW/g; SAR(10 g) = 0.713 mW/g
Maximum value of SAR (measured) = 1.12 mW/g

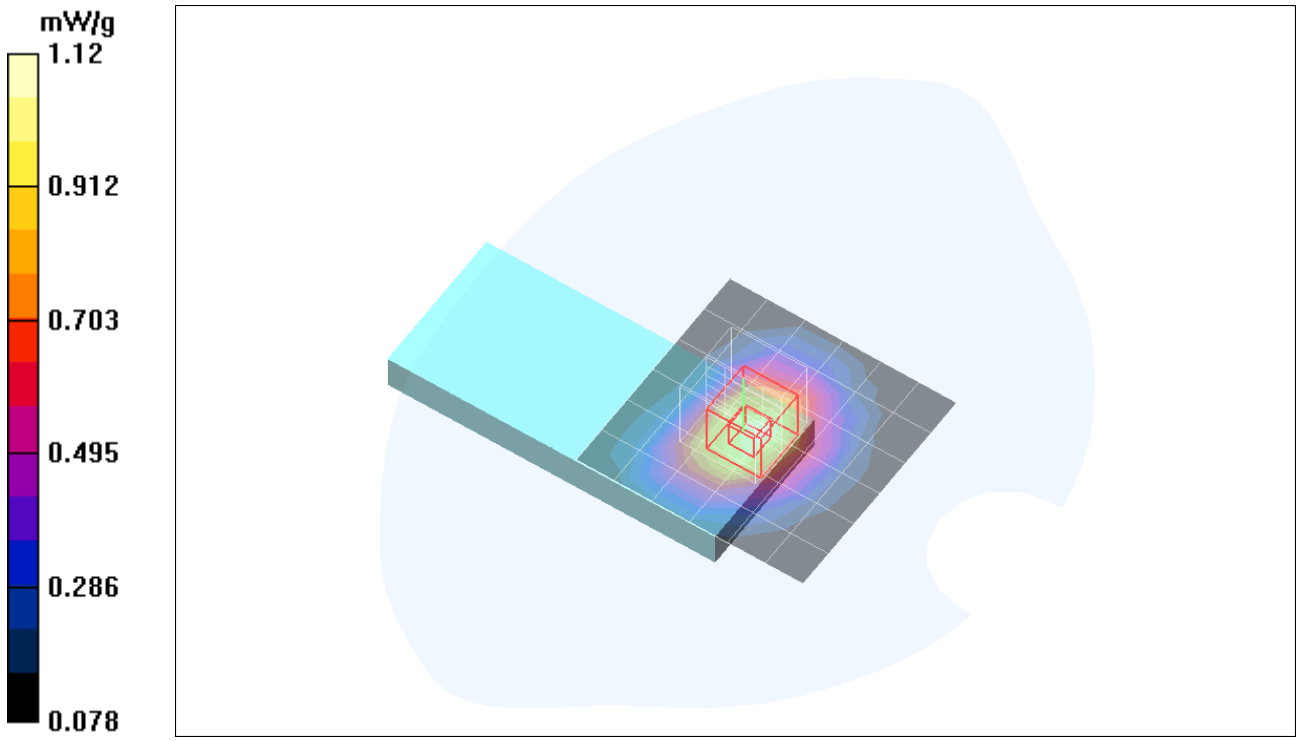

Test Laboratory: Compliance Certification Services

Cell Band

DUT: PCMCIA Modem Card CDMA; Type: PCMCIA; Serial: 005

Communication System: CDMA; Frequency: 836.52 MHz;Duty Cycle: 1:1
Medium parameters used (interpolated): f = 836.52 MHz; σ = 0.956 mho/m; ε_r = 53; ρ = 1000 kg/m^3
Phantom section: Flat Section

Room Ambient Temperature: 23.0deg. C; Liquid Temperature: 21.6 deg. C

DASY4 Configuration:
- Area Scan setting - Find Secondary Maximum Within: 2.0 dB and with a peak SAR value greater than 0.0012W/kg
- Probe: EX3DV3 - SN3531; ConvF(10.54, 10.54, 10.54); Calibrated: 7/21/2005
- Sensor-Surface: 4mm (Mechanical Surface Detection)
- Electronics: DAE4 SN558; Calibrated: 1/20/2006
- Phantom: SAM 2; Type: SAM 2; Serial: 1050
- Measurement SW: DASY4, V4.6 Build 23; Postprocessing SW: SEMCAD, V1.8 Build 161

HP Pavilion dv4000 CDMA ch 384/Area Scan (7x7x1): Measurement grid: dx=15mm, dy=15mm

Info: Interpolated medium parameters used for SAR evaluation.
Maximum value of SAR (measured) = 1.37 mW/g

HP Pavilion dv4000 CDMA ch 384/Zoom Scan (5x5x7)/Cube 0: Measurement grid: dx=7.5mm, dy=7.5mm, dz=5mm

Reference Value = 35.7 V/m; Power Drift = -0.113 dB
Peak SAR (extrapolated) = 1.82 W/kg
SAR(1 g) = 1.31 mW/g; SAR(10 g) = 0.880 mW/g
Info: Interpolated medium parameters used for SAR evaluation.
Maximum value of SAR (measured) = 1.40 mW/g

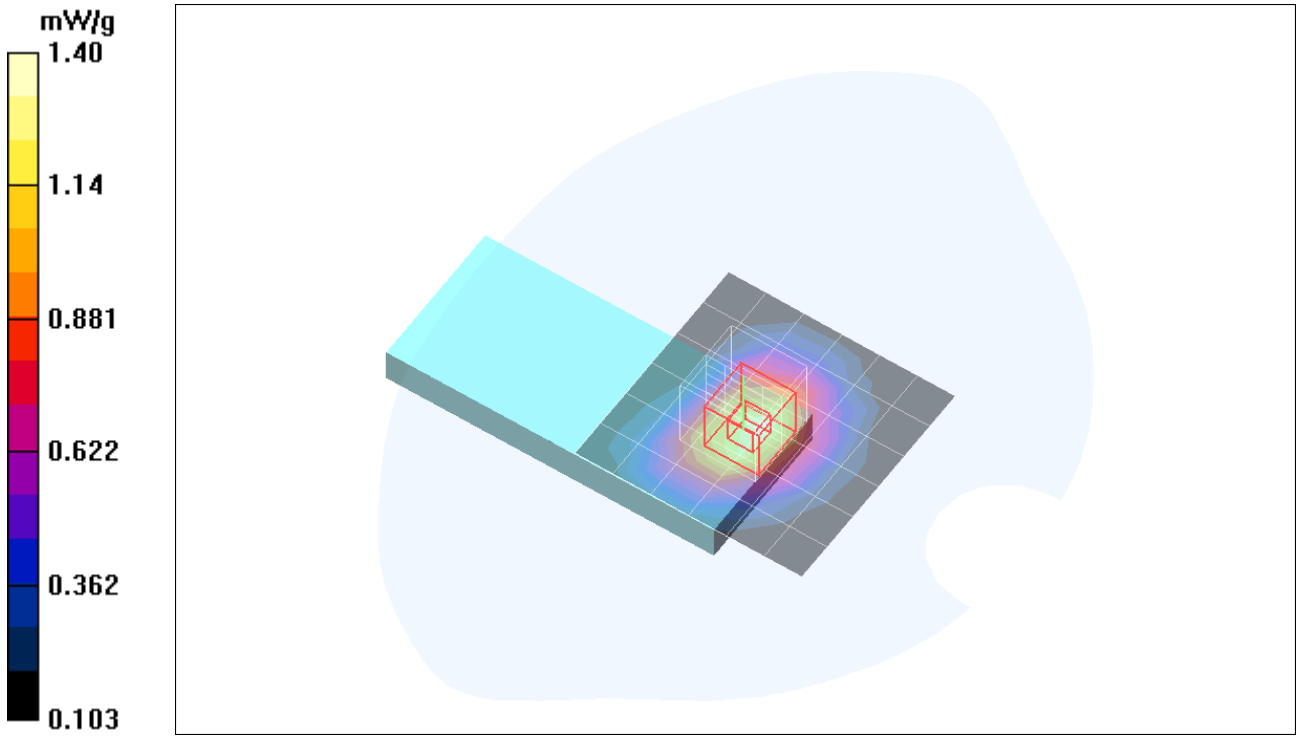

Date/Time: 5/4/2006 6:11:23 PM

Test Laboratory: Compliance Certification Services

Cell Band

DUT: PCMCIA Modem Card CDMA; Type: PCMCIA; Serial: 005

Communication System: CDMA; Frequency: 836.52 MHz;Duty Cycle: 1:1

HP Pavilion dv4000 CDMA ch 384/Z Scan (1x1x41): Measurement grid: dx=20mm, dy=20mm, dz=2.5mm

Info: Interpolated medium parameters used for SAR evaluation.
Maximum value of SAR (measured) = 0.994 mW/g

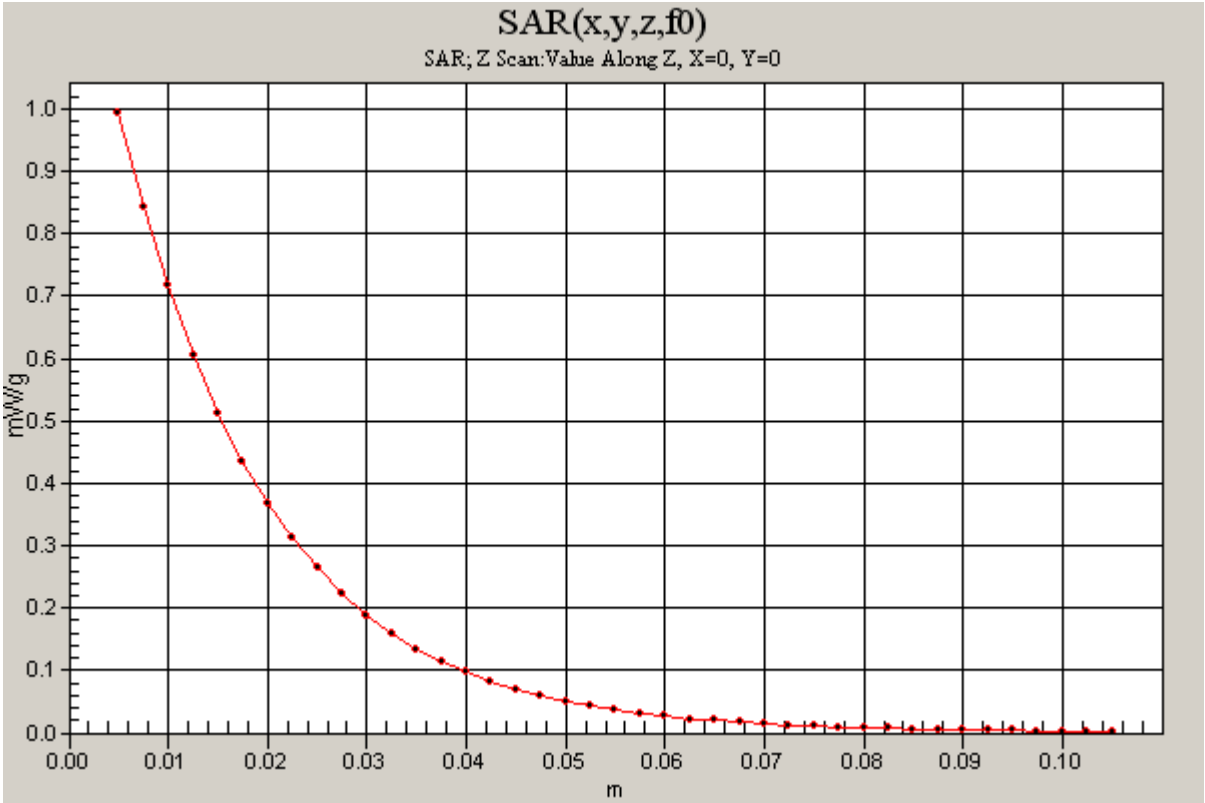

Test Laboratory: Compliance Certification Services

Cell Band

DUT: PCMCIA Modem Card CDMA; Type: PCMCIA; Serial: 005

Communication System: CDMA; Frequency: 848.31 MHz;Duty Cycle: 1:1
Medium parameters used (interpolated): f = 848.31 MHz; σ = 0.968 mho/m; ε_r = 52.9; ρ = 1000 kg/m^3
Phantom section: Flat Section

Room Ambient Temperature: 23.0deg. C; Liquid Temperature: 21.6 deg. C

DASY4 Configuration:
- Area Scan setting - Find Secondary Maximum Within: 2.0 dB and with a peak SAR value greater than 0.0012W/kg
- Probe: EX3DV3 - SN3531; ConvF(10.54, 10.54, 10.54); Calibrated: 7/21/2005
- Sensor-Surface: 4mm (Mechanical Surface Detection)
- Electronics: DAE4 SN558; Calibrated: 1/20/2006
- Phantom: SAM 2; Type: SAM 2; Serial: 1050
- Measurement SW: DASY4, V4.6 Build 23; Postprocessing SW: SEMCAD, V1.8 Build 161

HP Pavilion dv4000 CDMA ch 777/Area Scan (7x7x1): Measurement grid: dx=15mm, dy=15mm
Info: Interpolated medium parameters used for SAR evaluation.
Maximum value of SAR (measured) = 1.07 mW/g

HP Pavilion dv4000 CDMA ch 777/Zoom Scan (5x5x7)/Cube 0: Measurement grid: dx=7.5mm, dy=7.5mm, dz=5mm
Reference Value = 31.1 V/m; Power Drift = -0.116 dB
Peak SAR (extrapolated) = 1.39 W/kg
SAR(1 g) = 0.992 mW/g; SAR(10 g) = 0.663 mW/g
Info: Interpolated medium parameters used for SAR evaluation.

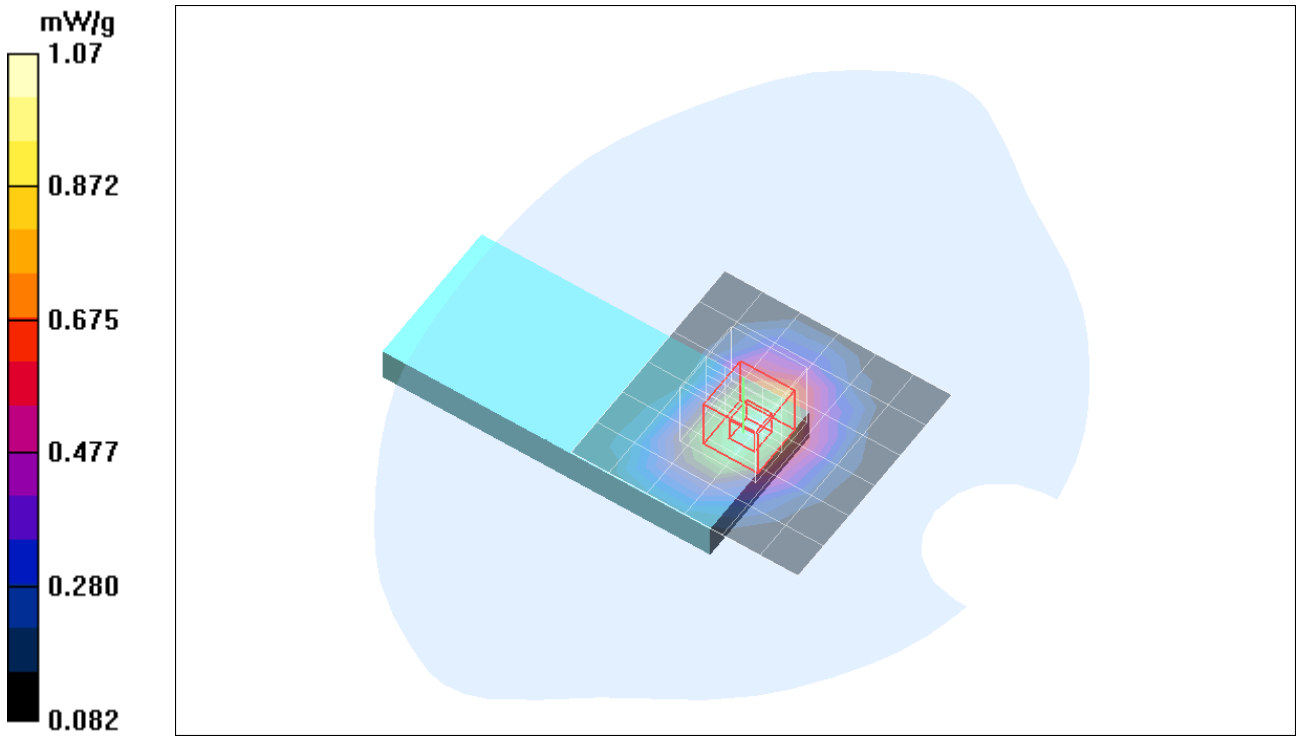

Date/Time: 5/4/2006 7:31:18 PM

Test Laboratory: Compliance Certification Services

Cell Band

DUT: PCMCIA Modem Card CDMA; Type: PCMCIA; Serial: 005

Communication System: CDMA; Frequency: 824.7 MHz;Duty Cycle: 1:1
Medium parameters used: f = 825 MHz; σ = 0.945 mho/m; ε_r = 53.1; ρ = 1000 kg/m^3
Phantom section: Flat Section

Room Ambient Temperature: 23.0deg. C; Liquid Temperature: 21.6 deg. C

DASY4 Configuration:
- Area Scan setting - Find Secondary Maximum Within: 2.0 dB and with a peak SAR value greater than 0.0012W/kg
- Probe: EX3DV3 - SN3531; ConvF(10.54, 10.54, 10.54); Calibrated: 7/21/2005
- Sensor-Surface: 4mm (Mechanical Surface Detection)
- Electronics: DAE4 SN558; Calibrated: 1/20/2006
- Phantom: SAM 2; Type: SAM 2; Serial: 1050
- Measurement SW: DASY4, V4.6 Build 23; Postprocessing SW: SEMCAD, V1.8 Build 161

Compaq Presario v2000 CDMA ch 1013/Area Scan (7x7x1): Measurement grid: dx=15mm, dy=15mm
Maximum value of SAR (measured) = 1.13 mW/g

Compaq Presario v2000 CDMA ch 1013/Zoom Scan (5x5x7)/Cube 0: Measurement grid: dx=7.5mm, dy=7.5mm, dz=5mm
Reference Value = 32.7 V/m; Power Drift = -0.175 dB
Peak SAR (extrapolated) = 1.54 W/kg
SAR(1 g) = 1.11 mW/g; SAR(10 g) = 0.746 mW/g
Maximum value of SAR (measured) = 1.20 mW/g

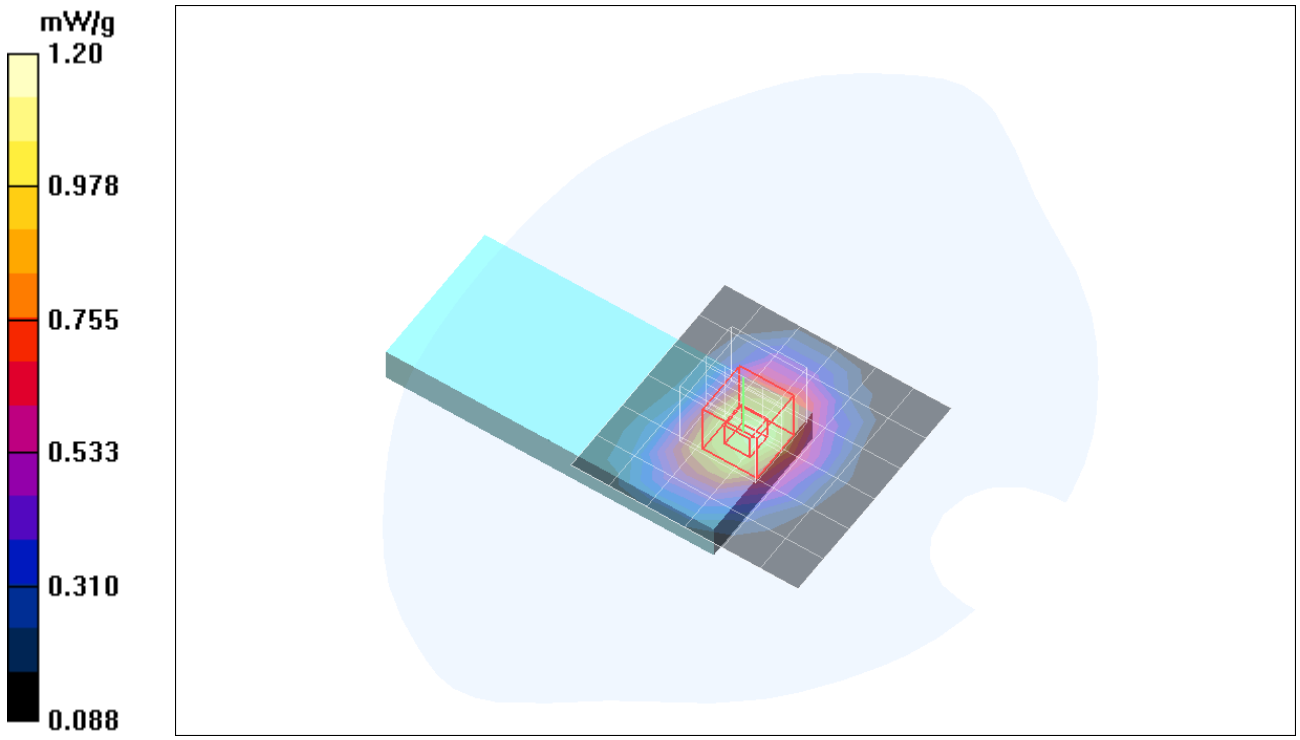

Date/Time: 5/4/2006 7:16:22 PM

Test Laboratory: Compliance Certification Services

Cell Band

DUT: PCMCIA Modem Card CDMA; Type: PCMCIA; Serial: 005

Communication System: CDMA; Frequency: 836.52 MHz;Duty Cycle: 1:1
Medium parameters used (interpolated): f = 836.52 MHz; σ = 0.956 mho/m; ε_r = 53; ρ = 1000 kg/m^3
Phantom section: Flat Section

Room Ambient Temperature: 23.0deg. C; Liquid Temperature: 21.6 deg. C

DASY4 Configuration:
- Area Scan setting - Find Secondary Maximum Within: 2.0 dB and with a peak SAR value greater than 0.0012W/kg
- Probe: EX3DV3 - SN3531; ConvF(10.54, 10.54, 10.54); Calibrated: 7/21/2005
- Sensor-Surface: 4mm (Mechanical Surface Detection)
- Electronics: DAE4 SN558; Calibrated: 1/20/2006
- Phantom: SAM 2; Type: SAM 2; Serial: 1050
- Measurement SW: DASY4, V4.6 Build 23; Postprocessing SW: SEMCAD, V1.8 Build 161

Compaq Presario v2000 CDMA ch 384/Area Scan (7x7x1): Measurement grid: dx=15mm, dy=15mm

Info: Interpolated medium parameters used for SAR evaluation.
Maximum value of SAR (measured) = 1.33 mW/g

Compaq Presario v2000 CDMA ch 384/Zoom Scan (5x5x7)/Cube 0: Measurement grid: dx=7.5mm, dy=7.5mm, dz=5mm

Reference Value = 34.9 V/m; Power Drift = -0.117 dB
Peak SAR (extrapolated) = 1.73 W/kg
SAR(1 g) = 1.25 mW/g; SAR(10 g) = 0.841 mW/g
Info: Interpolated medium parameters used for SAR evaluation.
Maximum value of SAR (measured) = 1.34 mW/g

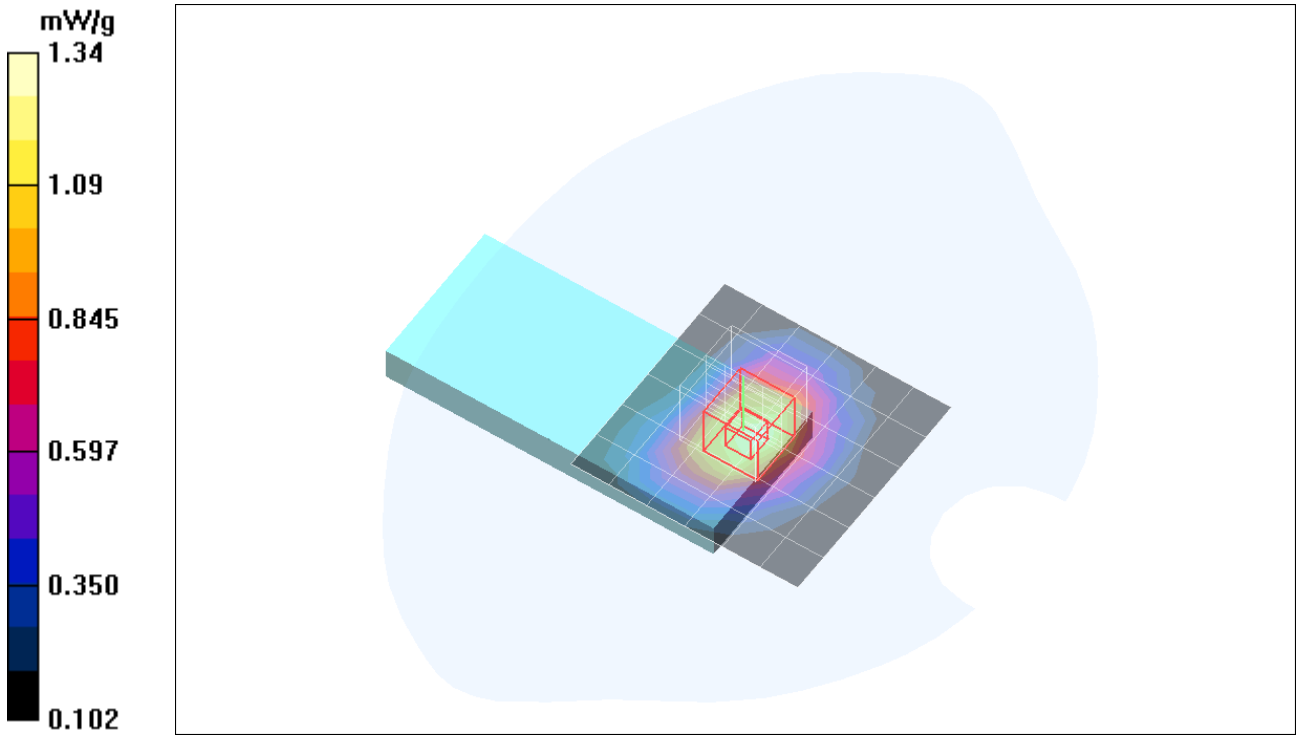

Date/Time: 5/4/2006 7:45:33 PM

Test Laboratory: Compliance Certification Services

Cell Band

DUT: PCMCIA Modem Card CDMA; Type: PCMCIA; Serial: 005

Communication System: CDMA; Frequency: 848.31 MHz;Duty Cycle: 1:1
Medium parameters used (interpolated): f = 848.31 MHz; σ = 0.968 mho/m; ε_r = 52.9; ρ = 1000 kg/m^3
Phantom section: Flat Section

Room Ambient Temperature: 23.0deg. C; Liquid Temperature: 21.6 deg. C

DASY4 Configuration:
- Area Scan setting - Find Secondary Maximum Within: 2.0 dB and with a peak SAR value greater than 0.0012W/kg
- Probe: EX3DV3 - SN3531; ConvF(10.54, 10.54, 10.54); Calibrated: 7/21/2005
- Sensor-Surface: 4mm (Mechanical Surface Detection)
- Electronics: DAE4 SN558; Calibrated: 1/20/2006
- Phantom: SAM 2; Type: SAM 2; Serial: 1050
- Measurement SW: DASY4, V4.6 Build 23; Postprocessing SW: SEMCAD, V1.8 Build 161

Compaq Presario v2000 CDMA ch 777/Area Scan (7x7x1): Measurement grid: dx=15mm, dy=15mm
Info: Interpolated medium parameters used for SAR evaluation.
Maximum value of SAR (measured) = 1.03 mW/g

Compaq Presario v2000 CDMA ch 777/Zoom Scan (5x5x7)/Cube 0: Measurement grid: dx=7.5mm, dy=7.5mm, dz=5mm
Reference Value = 30.2 V/m; Power Drift = -0.204 dB
Peak SAR (extrapolated) = 1.40 W/kg
SAR(1 g) = 0.991 mW/g; SAR(10 g) = 0.660 mW/g
Info: Interpolated medium parameters used for SAR evaluation.
Maximum value of SAR (measured) = 1.06 mW/g

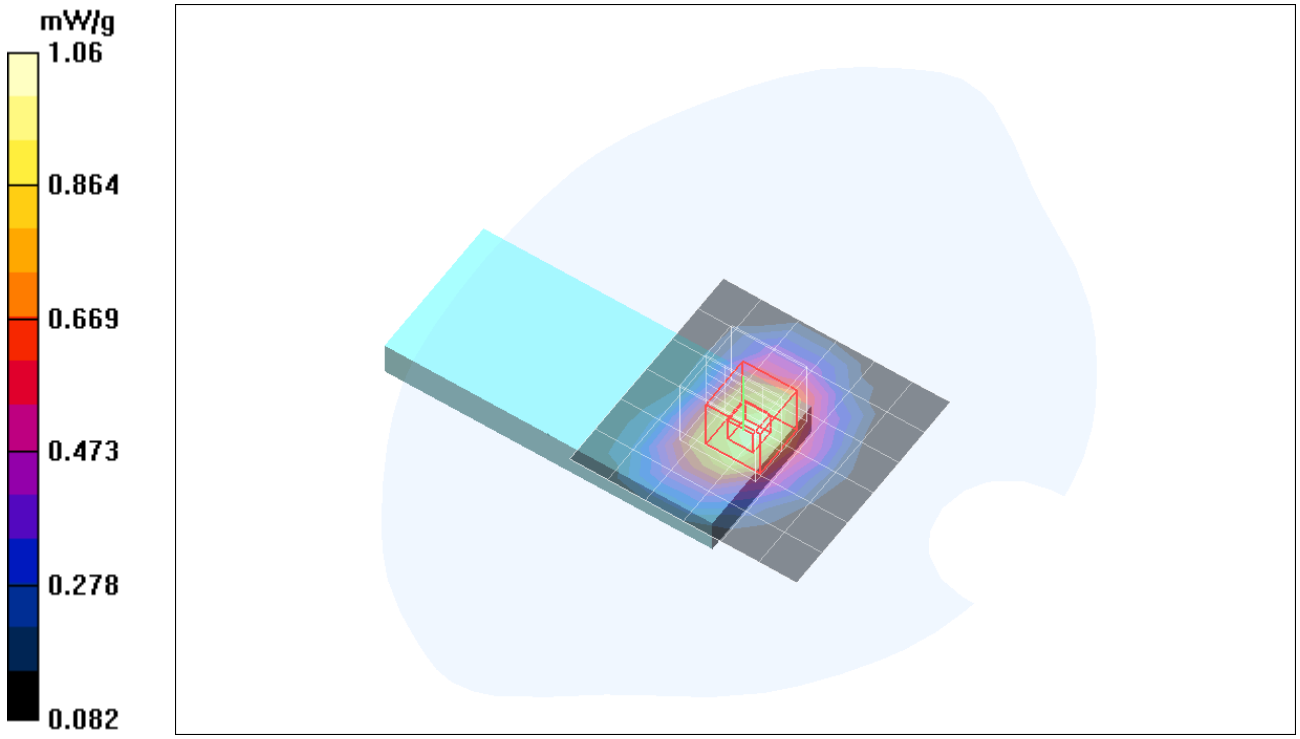

Date/Time: 5/9/2006 11:28:10 AM

Test Laboratory: Compliance Certification Services

Cell Band

DUT: PCMCIA Modem Card CDMA; Type: PCMCIA; Serial: 005

Communication System: CDMA; Frequency: 824.7 MHz;Duty Cycle: 1:1
Medium parameters used: f = 825 MHz; σ = 0.947 mho/m; ε_r = 53.1; ρ = 1000 kg/m^3
Phantom section: Flat Section

Room Ambient Temperature: 23.0deg. C; Liquid Temperature: 22.0 deg. C

DASY4 Configuration:
- Area Scan setting - Find Secondary Maximum Within: 2.0 dB and with a peak SAR value greater than 0.0012W/kg
- Probe: EX3DV3 - SN3531; ConvF(10.54, 10.54, 10.54); Calibrated: 7/21/2005
- Sensor-Surface: 4mm (Mechanical Surface Detection)
- Electronics: DAE4 SN558; Calibrated: 1/20/2006
- Phantom: SAM 2; Type: SAM 2; Serial: 1050
- Measurement SW: DASY4, V4.6 Build 23; Postprocessing SW: SEMCAD, V1.8 Build 161

Toshiba Satellite CDMA ch 1013 1xEV-DO/Area Scan (7x7x1): Measurement grid: dx=15mm, dy=15mm
Maximum value of SAR (measured) = 0.956 mW/g

Toshiba Satellite CDMA ch 1013 1xEV-DO/Zoom Scan (5x5x7)/Cube 0: Measurement grid: dx=7.5mm, dy=7.5mm, dz=5mm
Reference Value = 24.3 V/m; Power Drift = -0.136 dB
Peak SAR (extrapolated) = 1.34 W/kg
SAR(1 g) = 0.972 mW/g; SAR(10 g) = 0.658 mW/g
Maximum value of SAR (measured) = 1.04 mW/g

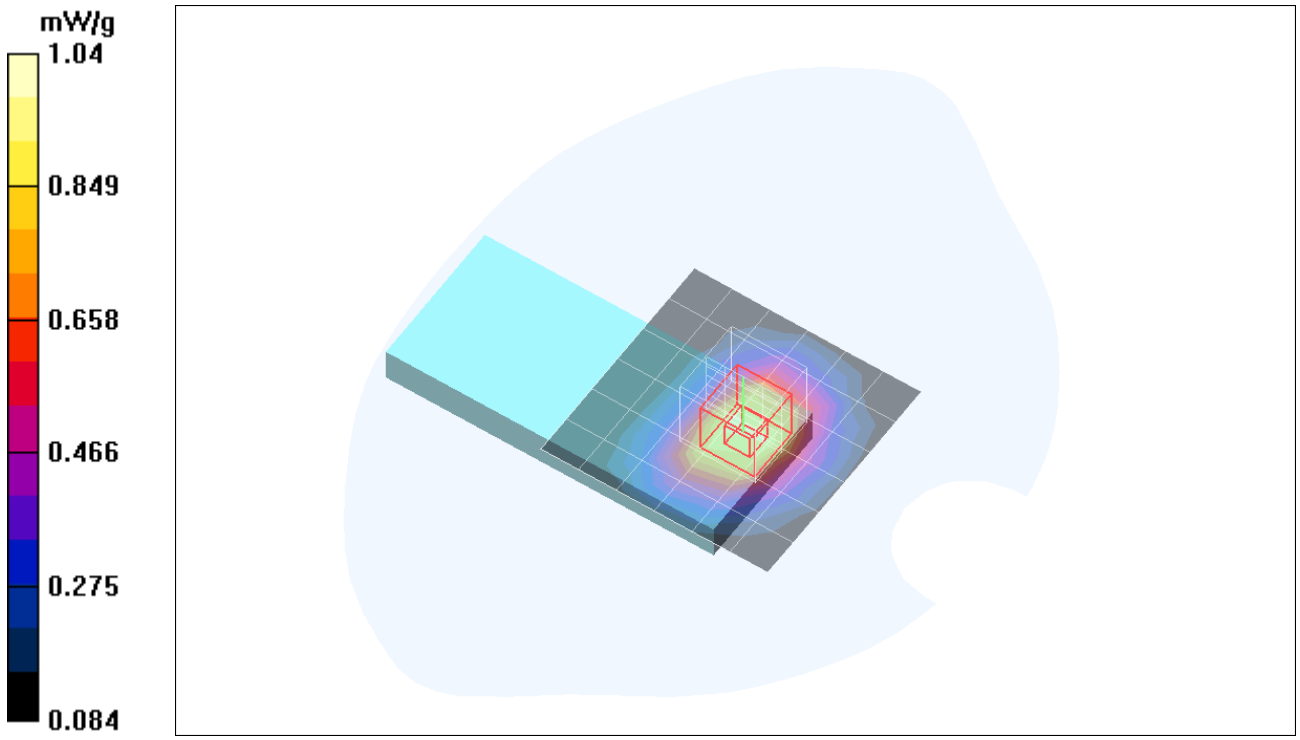

Test Laboratory: Compliance Certification Services

Cell Band

DUT: PCMCIA Modem Card CDMA; Type: PCMCIA; Serial: 005

Communication System: CDMA; Frequency: 836.52 MHz;Duty Cycle: 1:1
Medium parameters used (interpolated): f = 836.52 MHz; σ = 0.959 mho/m; ε_r = 53; ρ = 1000 kg/m^3
Phantom section: Flat Section

Room Ambient Temperature: 23.0deg. C; Liquid Temperature: 22.0 deg. C

DASY4 Configuration:
- Area Scan setting - Find Secondary Maximum Within: 2.0 dB and with a peak SAR value greater than 0.0012W/kg
- Probe: EX3DV3 - SN3531; ConvF(10.54, 10.54, 10.54); Calibrated: 7/21/2005
- Sensor-Surface: 4mm (Mechanical Surface Detection)
- Electronics: DAE4 SN558; Calibrated: 1/20/2006
- Phantom: SAM 2; Type: SAM 2; Serial: 1050
- Measurement SW: DASY4, V4.6 Build 23; Postprocessing SW: SEMCAD, V1.8 Build 161

Toshiba Satellite CDMA ch 384 1xEV-DO/Area Scan (7x7x1): Measurement grid: dx=15mm, dy=15mm
Info: Interpolated medium parameters used for SAR evaluation.
Maximum value of SAR (measured) = 1.12 mW/g

Toshiba Satellite CDMA ch 384 1xEV-DO/Zoom Scan (5x5x7)/Cube 0: Measurement grid: dx=7.5mm, dy=7.5mm, dz=5mm
Reference Value = 25.5 V/m; Power Drift = -0.130 dB
Peak SAR (extrapolated) = 1.61 W/kg
SAR(1 g) = 1.16 mW/g; SAR(10 g) = 0.778 mW/g
Info: Interpolated medium parameters used for SAR evaluation.
Maximum value of SAR (measured) = 1.24 mW/g

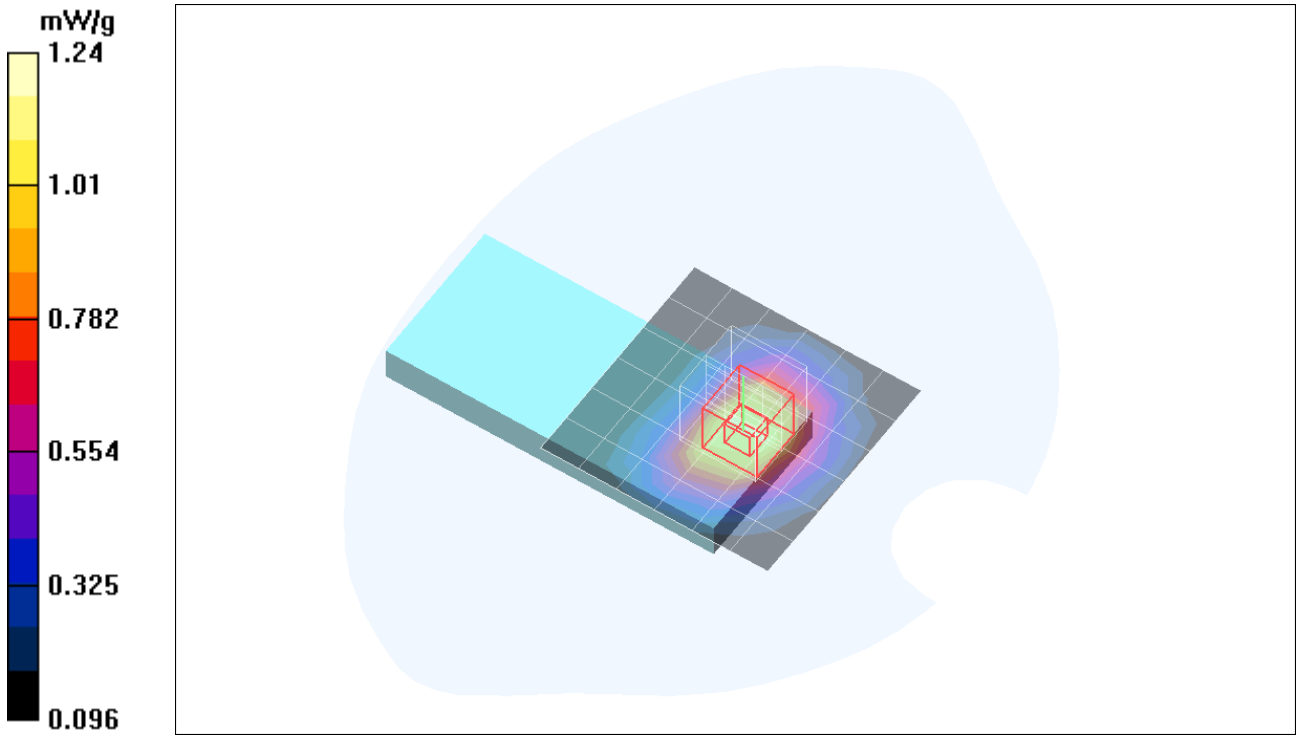

Test Laboratory: Compliance Certification Services

Cell Band

DUT: PCMCIA Modem Card CDMA; Type: PCMCIA; Serial: 005

Communication System: CDMA; Frequency: 848.31 MHz;Duty Cycle: 1:1
Medium parameters used (interpolated): f = 848.31 MHz; σ = 0.971 mho/m; ε_r = 52.9; ρ = 1000 kg/m^3
Phantom section: Flat Section

Room Ambient Temperature: 23.0deg. C; Liquid Temperature: 22.0 deg. C

DASY4 Configuration:
- Area Scan setting - Find Secondary Maximum Within: 2.0 dB and with a peak SAR value greater than 0.0012W/kg
- Probe: EX3DV3 - SN3531; ConvF(10.54, 10.54, 10.54); Calibrated: 7/21/2005
- Sensor-Surface: 4mm (Mechanical Surface Detection)
- Electronics: DAE4 SN558; Calibrated: 1/20/2006
- Phantom: SAM 2; Type: SAM 2; Serial: 1050
- Measurement SW: DASY4, V4.6 Build 23; Postprocessing SW: SEMCAD, V1.8 Build 161

Toshiba Satellite CDMA ch 777 1xEV-DO/Area Scan (7x7x1): Measurement grid: dx=15mm, dy=15mm
Info: Interpolated medium parameters used for SAR evaluation.
Maximum value of SAR (measured) = 0.833 mW/g

Toshiba Satellite CDMA ch 777 1xEV-DO/Zoom Scan (5x5x7)/Cube 0: Measurement grid: dx=7.5mm, dy=7.5mm, dz=5mm
Reference Value = 21.2 V/m; Power Drift = -0.156 dB
Peak SAR (extrapolated) = 1.19 W/kg
SAR(1 g) = 0.841 mW/g; SAR(10 g) = 0.564 mW/g
Info: Interpolated medium parameters used for SAR evaluation.
Maximum value of SAR (measured) = 0.890 mW/g

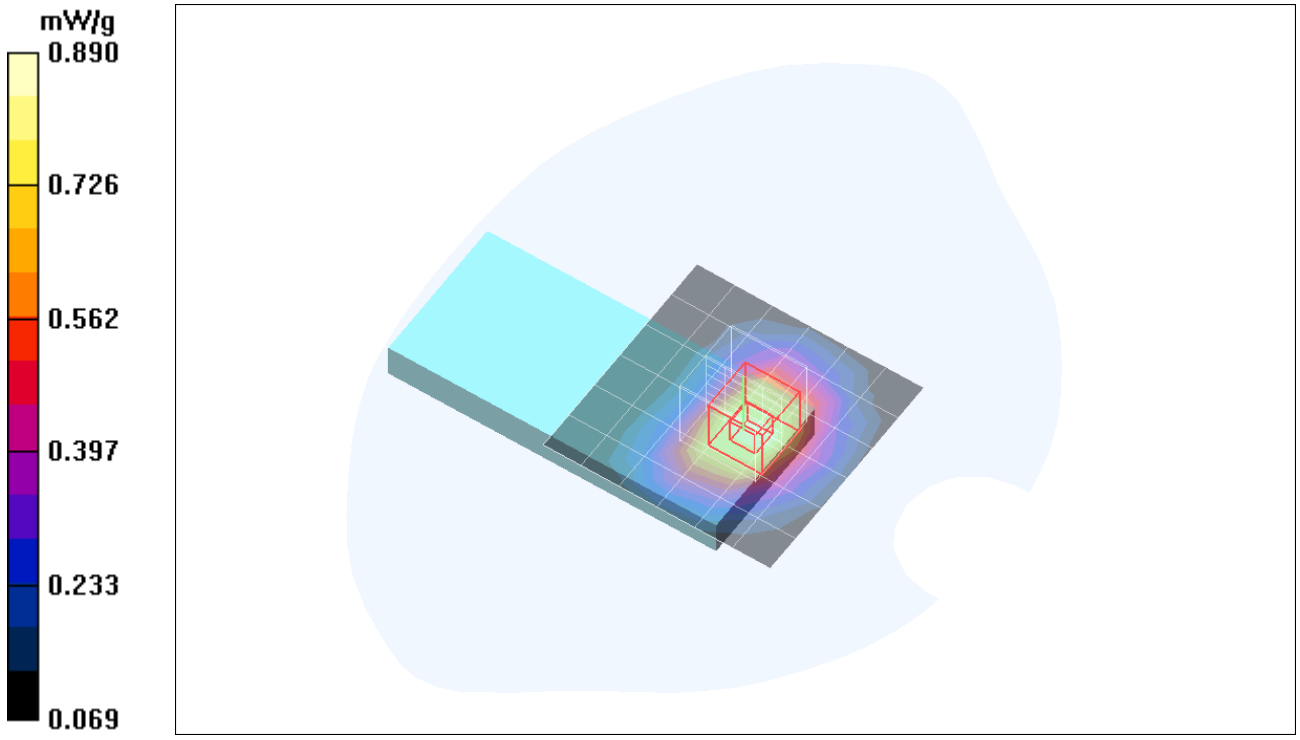

Date/Time: 5/5/2006 12:42:30 PM

Test Laboratory: Compliance Certification Services

Cell Band

DUT: PCMCIA Modem Card CDMA; Type: PCMCIA; Serial: 005

Communication System: CDMA; Frequency: 824.7 MHz;Duty Cycle: 1:1
Medium parameters used: f = 825 MHz; σ = 0.94 mho/m; ε_r = 52.7; ρ = 1000 kg/m^3
Phantom section: Flat Section

Room Ambient Temperature: 23.0deg. C; Liquid Temperature: 21.3 deg. C

DASY4 Configuration:
- Area Scan setting - Find Secondary Maximum Within: 2.0 dB and with a peak SAR value greater than 0.0012W/kg
- Probe: EX3DV3 - SN3531; ConvF(10.54, 10.54, 10.54); Calibrated: 7/21/2005
- Sensor-Surface: 4mm (Mechanical Surface Detection)
- Electronics: DAE4 SN558; Calibrated: 1/20/2006
- Phantom: SAM 2; Type: SAM 2; Serial: 1050
- Measurement SW: DASY4, V4.6 Build 23; Postprocessing SW: SEMCAD, V1.8 Build 161

HP Pavilion dv4000 CDMA ch 1013 1xEV-DO/Area Scan (7x7x1): Measurement grid: dx=15mm, dy=15mm
Maximum value of SAR (measured) = 1.21 mW/g

HP Pavilion dv4000 CDMA ch 1013 1xEV-DO/Zoom Scan (5x5x7)/Cube 0: Measurement grid: dx=7.5mm, dy=7.5mm, dz=5mm
Reference Value = 31.9 V/m; Power Drift = -0.148 dB
Peak SAR (extrapolated) = 1.44 W/kg
SAR(1 g) = 1.04 mW/g; SAR(10 g) = 0.704 mW/g
Maximum value of SAR (measured) = 1.12 mW/g

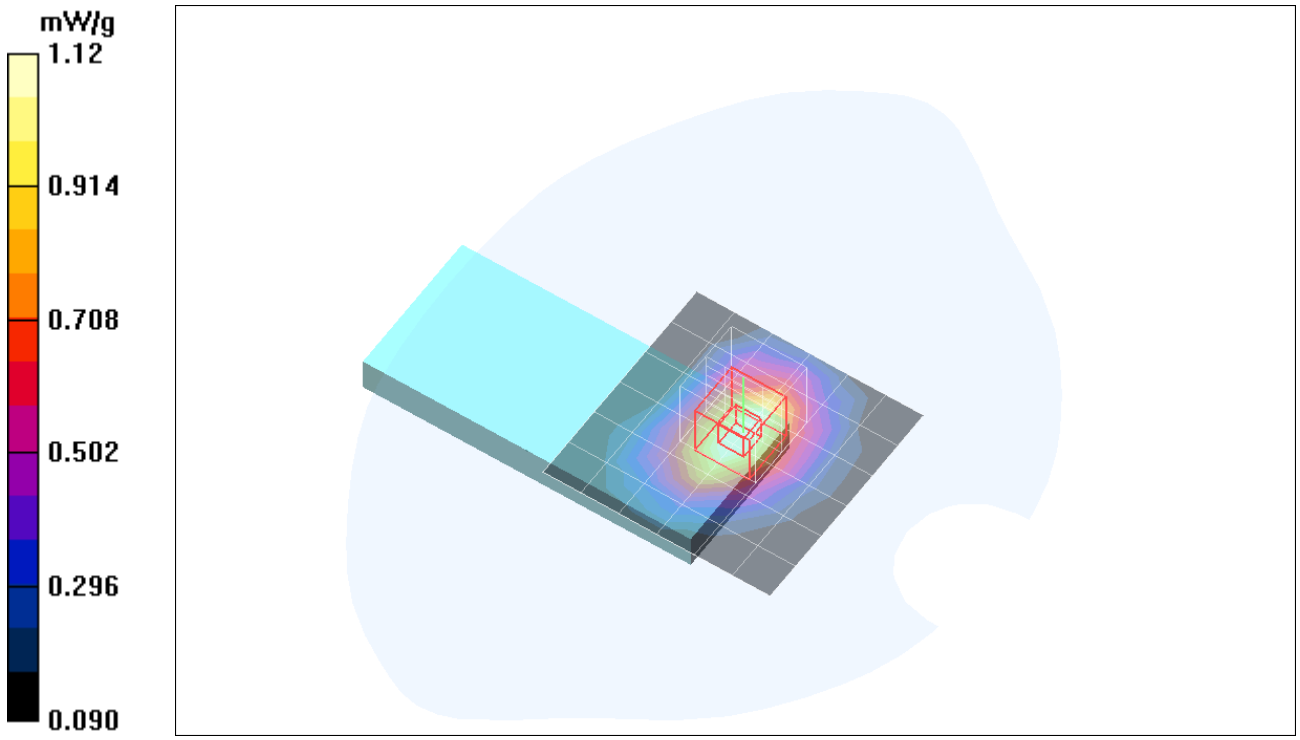

Test Laboratory: Compliance Certification Services

Cell Band

DUT: PCMCIA Modem Card CDMA; Type: PCMCIA; Serial: 005

Communication System: CDMA; Frequency: 836.52 MHz;Duty Cycle: 1:1
Medium parameters used (interpolated): f = 836.52 MHz; σ = 0.951 mho/m; ε_r = 52.6; ρ = 1000 kg/m^3
Phantom section: Flat Section

Room Ambient Temperature: 23.0deg. C; Liquid Temperature: 21.3 deg. C

DASY4 Configuration:
- Area Scan setting - Find Secondary Maximum Within: 2.0 dB and with a peak SAR value greater than 0.0012W/kg
- Probe: EX3DV3 - SN3531; ConvF(10.54, 10.54, 10.54); Calibrated: 7/21/2005
- Sensor-Surface: 4mm (Mechanical Surface Detection)
- Electronics: DAE4 SN558; Calibrated: 1/20/2006
- Phantom: SAM 2; Type: SAM 2; Serial: 1050
- Measurement SW: DASY4, V4.6 Build 23; Postprocessing SW: SEMCAD, V1.8 Build 161

HP Pavilion dv4000 CDMA ch 384 1xEV-DO/Area Scan (7x7x1): Measurement grid: dx=15mm, dy=15mm
Info: Interpolated medium parameters used for SAR evaluation.
Maximum value of SAR (measured) = 1.40 mW/g

HP Pavilion dv4000 CDMA ch 384 1xEV-DO/Zoom Scan (5x5x7)/Cube 0: Measurement grid: dx=7.5mm, dy=7.5mm, dz=5mm
Reference Value = 34.9 V/m; Power Drift = -0.104 dB
Peak SAR (extrapolated) = 1.80 W/kg
SAR(1 g) = 1.29 mW/g; SAR(10 g) = 0.868 mW/g
Info: Interpolated medium parameters used for SAR evaluation.
Maximum value of SAR (measured) = 1.39 mW/g

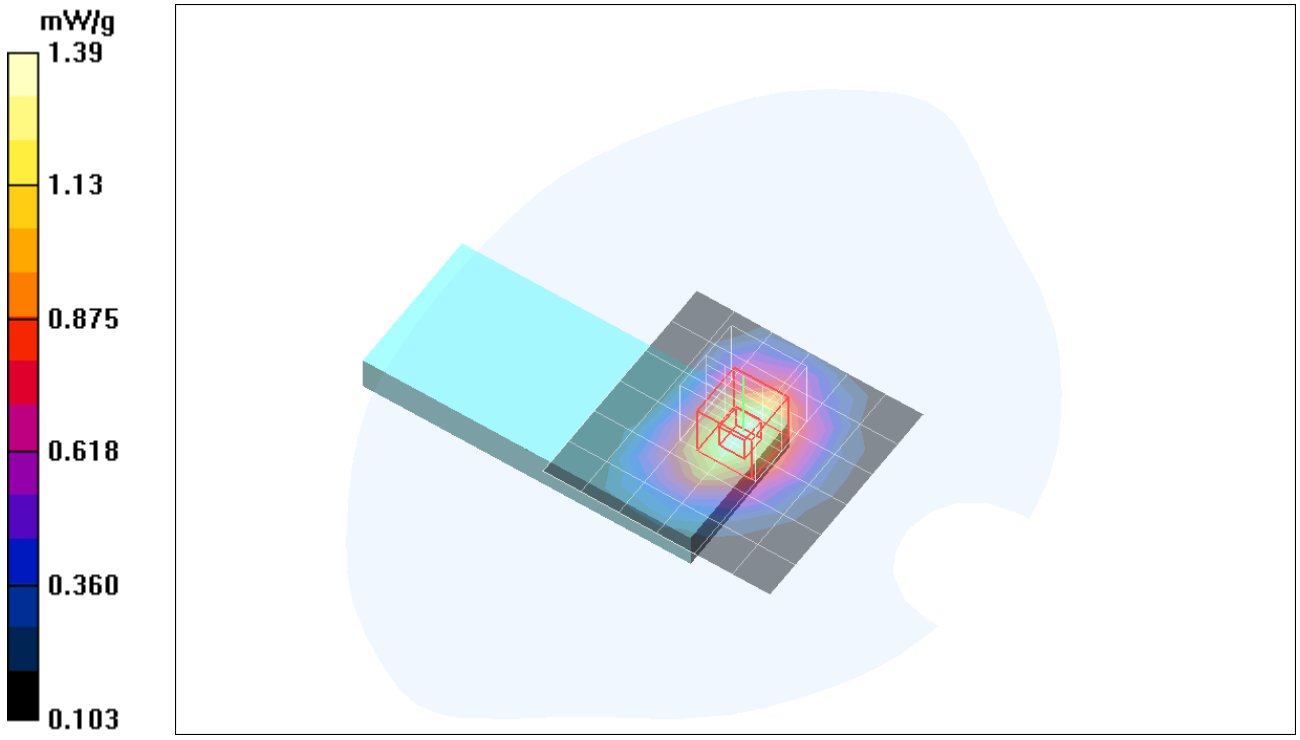

Date/Time: 5/5/2006 12:04:31 PM

Test Laboratory: Compliance Certification Services

Cell Band

DUT: PCMCIA Modem Card CDMA; Type: PCMCIA; Serial: 005

Communication System: CDMA; Frequency: 836.52 MHz;Duty Cycle: 1:1

HP Pavilion dv4000 CDMA ch 384 1xEV-DO/Z Scan (1x1x41): Measurement grid: dx=20mm, dy=20mm, dz=2.5mm

Info: Interpolated medium parameters used for SAR evaluation.
Maximum value of SAR (measured) = 0.993 mW/g

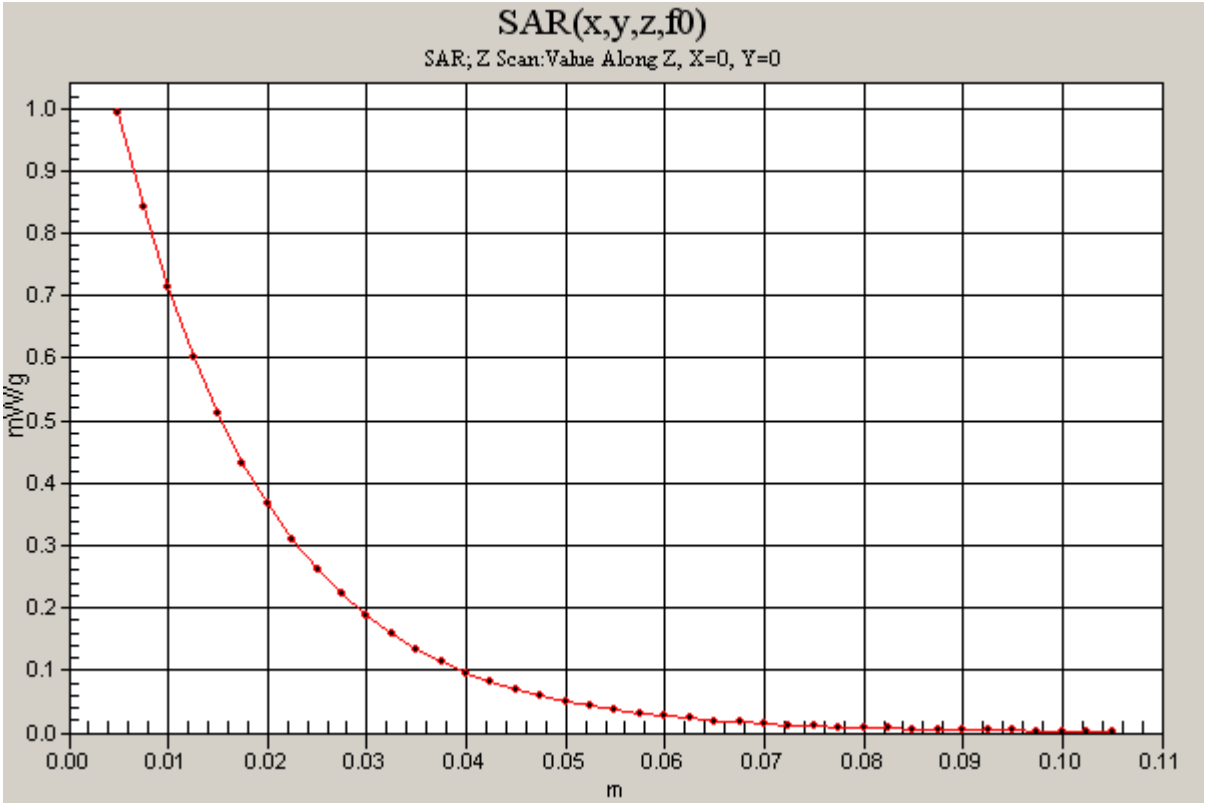

Test Laboratory: Compliance Certification Services

Cell Band

DUT: PCMCIA Modem Card CDMA; Type: PCMCIA; Serial: 005

Communication System: CDMA; Frequency: 848.31 MHz;Duty Cycle: 1:1
Medium parameters used (interpolated): f = 848.31 MHz; σ = 0.962 mho/m; ε_r = 52.5; ρ = 1000 kg/m^3
Phantom section: Flat Section

Room Ambient Temperature: 23.0deg. C; Liquid Temperature: 21.3 deg. C

DASY4 Configuration:
- Area Scan setting - Find Secondary Maximum Within: 2.0 dB and with a peak SAR value greater than 0.0012W/kg
- Probe: EX3DV3 - SN3531; ConvF(10.54, 10.54, 10.54); Calibrated: 7/21/2005
- Sensor-Surface: 4mm (Mechanical Surface Detection)
- Electronics: DAE4 SN558; Calibrated: 1/20/2006
- Phantom: SAM 2; Type: SAM 2; Serial: 1050
- Measurement SW: DASY4, V4.6 Build 23; Postprocessing SW: SEMCAD, V1.8 Build 161

HP Pavilion dv4000 CDMA ch 777 1 xEV-DO/Area Scan (7x7x1): Measurement grid: dx=15mm, dy=15mm
Info: Interpolated medium parameters used for SAR evaluation.
Maximum value of SAR (measured) = 1.13 mW/g

HP Pavilion dv4000 CDMA ch 777 1 xEV-DO/Zoom Scan (5x5x7)/Cube 0: Measurement grid: dx=7.5mm, dy=7.5mm, dz=5mm
Reference Value = 30.6 V/m; Power Drift = -0.136 dB
Peak SAR (extrapolated) = 1.48 W/kg
SAR(1 g) = 1.06 mW/g; SAR(10 g) = 0.704 mW/g
Info: Interpolated medium parameters used for SAR evaluation.
Maximum value of SAR (measured) = 1.14 mW/g

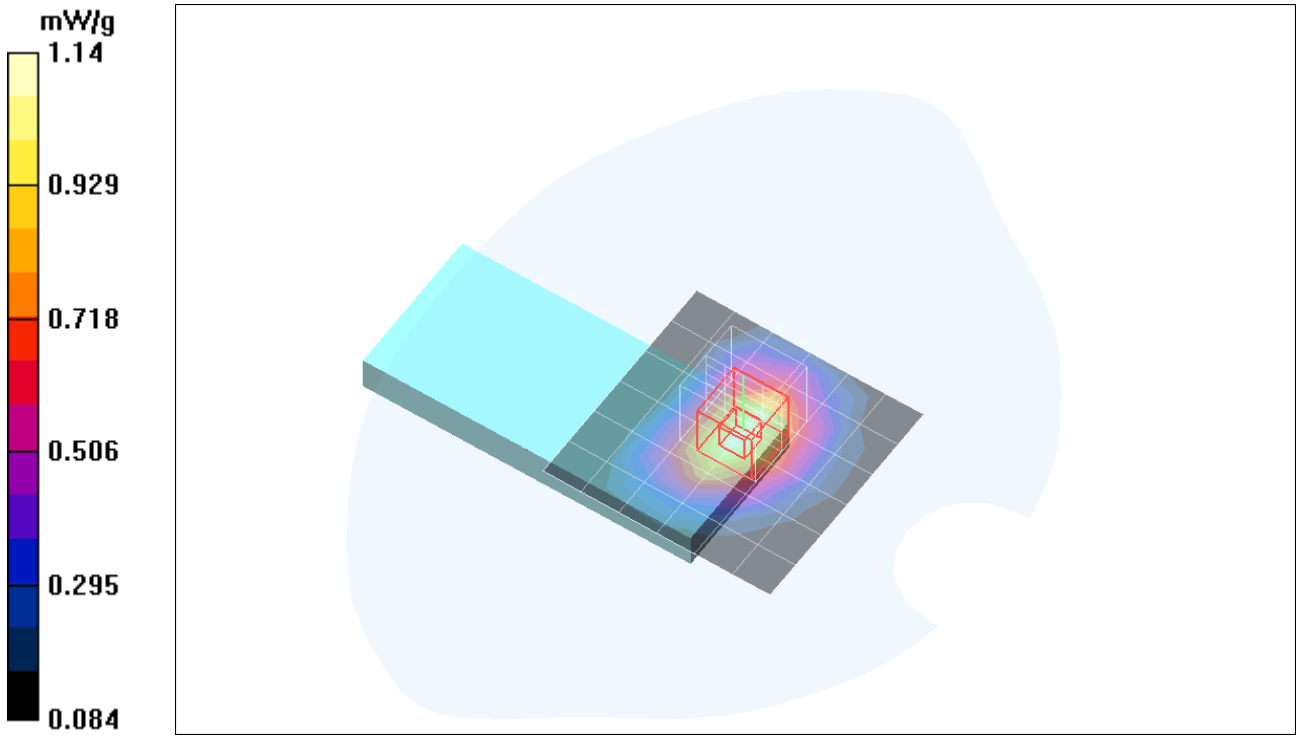

Date/Time: 5/9/2006 1:28:44 PM

Test Laboratory: Compliance Certification Services

Cell Band

DUT: PCMCIA Modem Card CDMA; Type: PCMCIA; Serial: 005

Communication System: CDMA; Frequency: 824.7 MHz;Duty Cycle: 1:1
Medium parameters used: f = 825 MHz; σ = 0.947 mho/m; ε_r = 53.1; ρ = 1000 kg/m^3
Phantom section: Flat Section

Room Ambient Temperature: 23.0deg. C; Liquid Temperature: 22.0 deg. C

DASY4 Configuration:
- Area Scan setting - Find Secondary Maximum Within: 2.0 dB and with a peak SAR value greater than 0.0012W/kg
- Probe: EX3DV3 - SN3531; ConvF(10.54, 10.54, 10.54); Calibrated: 7/21/2005
- Sensor-Surface: 4mm (Mechanical Surface Detection)
- Electronics: DAE4 SN558; Calibrated: 1/20/2006
- Phantom: SAM 2; Type: SAM 2; Serial: 1050
- Measurement SW: DASY4, V4.6 Build 23; Postprocessing SW: SEMCAD, V1.8 Build 161

Compaq Presario v2000 CDMA ch 1013 1xEV-DO/Area Scan (7x7x1): Measurement grid: dx=15mm, dy=15mm

Maximum value of SAR (measured) = 1.10 mW/g

Compaq Presario v2000 CDMA ch 1013 1xEV-DO/Zoom Scan (5x5x7)/Cube 0:

Measurement grid: dx=7.5mm, dy=7.5mm, dz=5mm
Reference Value = 16.7 V/m; Power Drift = -0.169 dB
Peak SAR (extrapolated) = 1.50 W/kg
SAR(1 g) = 1.09 mW/g; SAR(10 g) = 0.736 mW/g
Maximum value of SAR (measured) = 1.16 mW/g

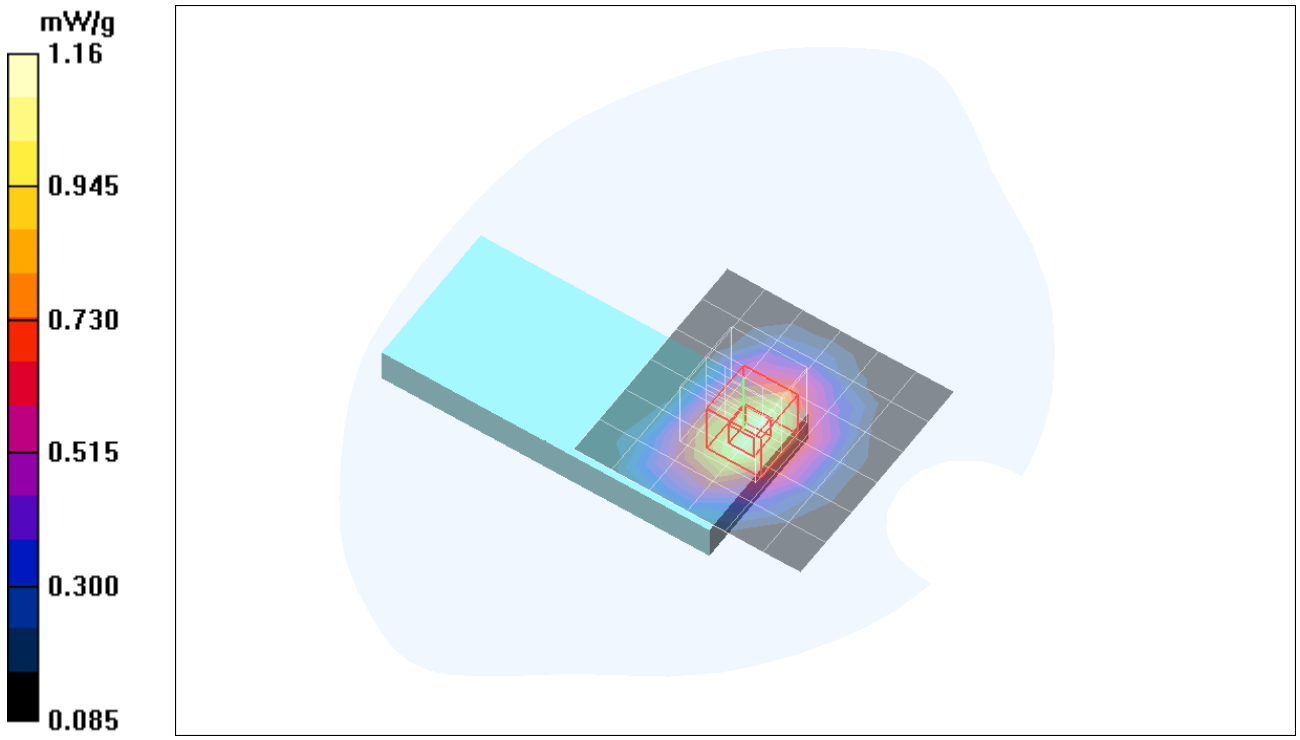

Date/Time: 5/9/2006 1:14:26 PM

Test Laboratory: Compliance Certification Services

Cell Band

DUT: PCMCIA Modem Card CDMA; Type: PCMCIA; Serial: 005

Communication System: CDMA; Frequency: 836.52 MHz;Duty Cycle: 1:1
Medium parameters used (interpolated): f = 836.52 MHz; σ = 0.959 mho/m; ε_r = 53; ρ = 1000 kg/m^3
Phantom section: Flat Section

Room Ambient Temperature: 23.0deg. C; Liquid Temperature: 22.0 deg. C

DASY4 Configuration:
- Area Scan setting - Find Secondary Maximum Within: 2.0 dB and with a peak SAR value greater than 0.0012W/kg
- Probe: EX3DV3 - SN3531; ConvF(10.54, 10.54, 10.54); Calibrated: 7/21/2005
- Sensor-Surface: 4mm (Mechanical Surface Detection)
- Electronics: DAE4 SN558; Calibrated: 1/20/2006
- Phantom: SAM 2; Type: SAM 2; Serial: 1050
- Measurement SW: DASY4, V4.6 Build 23; Postprocessing SW: SEMCAD, V1.8 Build 161

Compaq Presario v2000 CDMA ch 384 1xEV-DO/Area Scan (7x7x1): Measurement grid: dx=15mm, dy=15mm
Info: Interpolated medium parameters used for SAR evaluation.
Maximum value of SAR (measured) = 1.31 mW/g

Compaq Presario v2000 CDMA ch 384 1xEV-DO/Zoom Scan (5x5x7)/Cube 0: Measurement grid: dx=7.5mm, dy=7.5mm, dz=5mm
Reference Value = 17.4 V/m; Power Drift = -0.143 dB
Peak SAR (extrapolated) = 1.78 W/kg
SAR(1 g) = 1.28 mW/g; SAR(10 g) = 0.863 mW/g
Info: Interpolated medium parameters used for SAR evaluation.
Maximum value of SAR (measured) = 1.38 mW/g

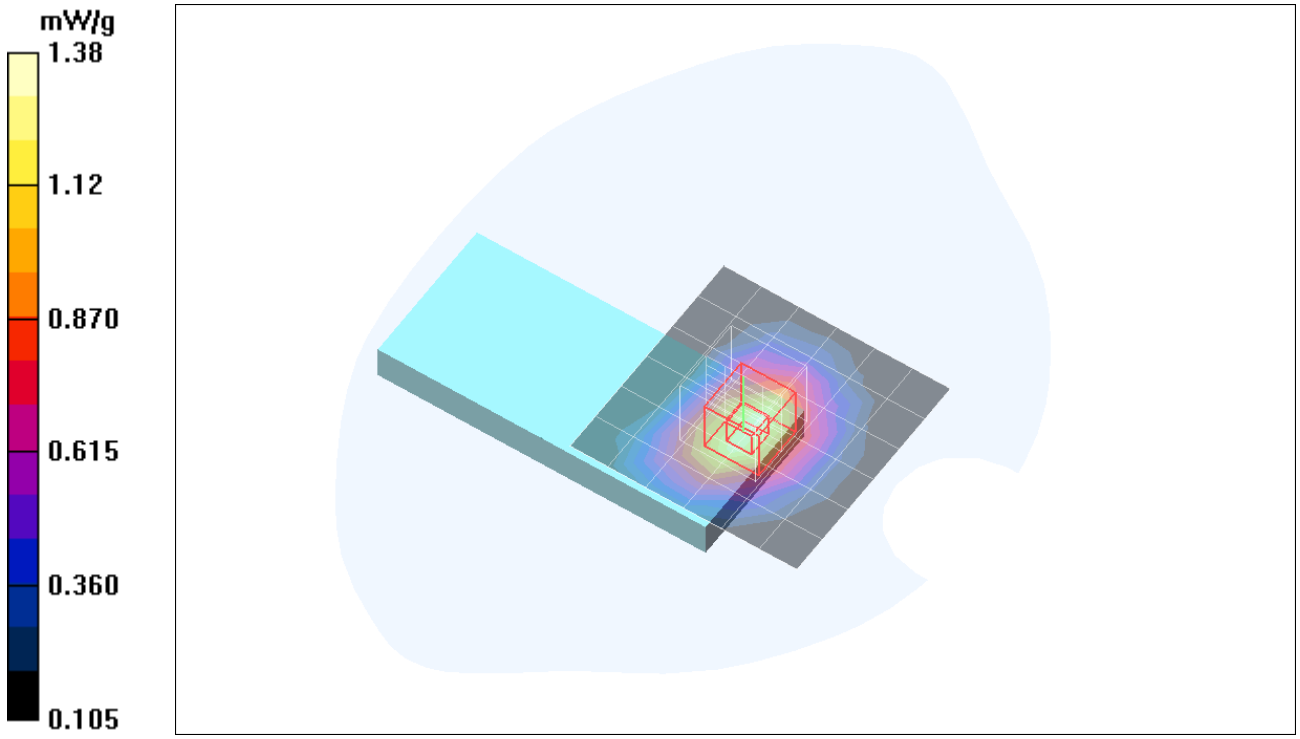

Date/Time: 5/9/2006 1:42:56 PM

Test Laboratory: Compliance Certification Services

Cell Band

DUT: PCMCIA Modem Card CDMA; Type: PCMCIA; Serial: 005

Communication System: CDMA; Frequency: 848.31 MHz;Duty Cycle: 1:1
Medium parameters used (interpolated): f = 848.31 MHz; σ = 0.971 mho/m; ε_r = 52.9; ρ = 1000 kg/m^3
Phantom section: Flat Section

Room Ambient Temperature: 23.0deg. C; Liquid Temperature: 22.0 deg. C

DASY4 Configuration:
- Area Scan setting - Find Secondary Maximum Within: 2.0 dB and with a peak SAR value greater than 0.0012W/kg
- Probe: EX3DV3 - SN3531; ConvF(10.54, 10.54, 10.54); Calibrated: 7/21/2005
- Sensor-Surface: 4mm (Mechanical Surface Detection)
- Electronics: DAE4 SN558; Calibrated: 1/20/2006
- Phantom: SAM 2; Type: SAM 2; Serial: 1050
- Measurement SW: DASY4, V4.6 Build 23; Postprocessing SW: SEMCAD, V1.8 Build 161

Compaq Presario v2000 CDMA ch 777 1xEV-DO/Area Scan (7x7x1): Measurement grid: dx=15mm, dy=15mm
nfo: Interpolated medium parameters used for SAR evaluation.
Maximum value of SAR (measured) = 0.947 mW/g
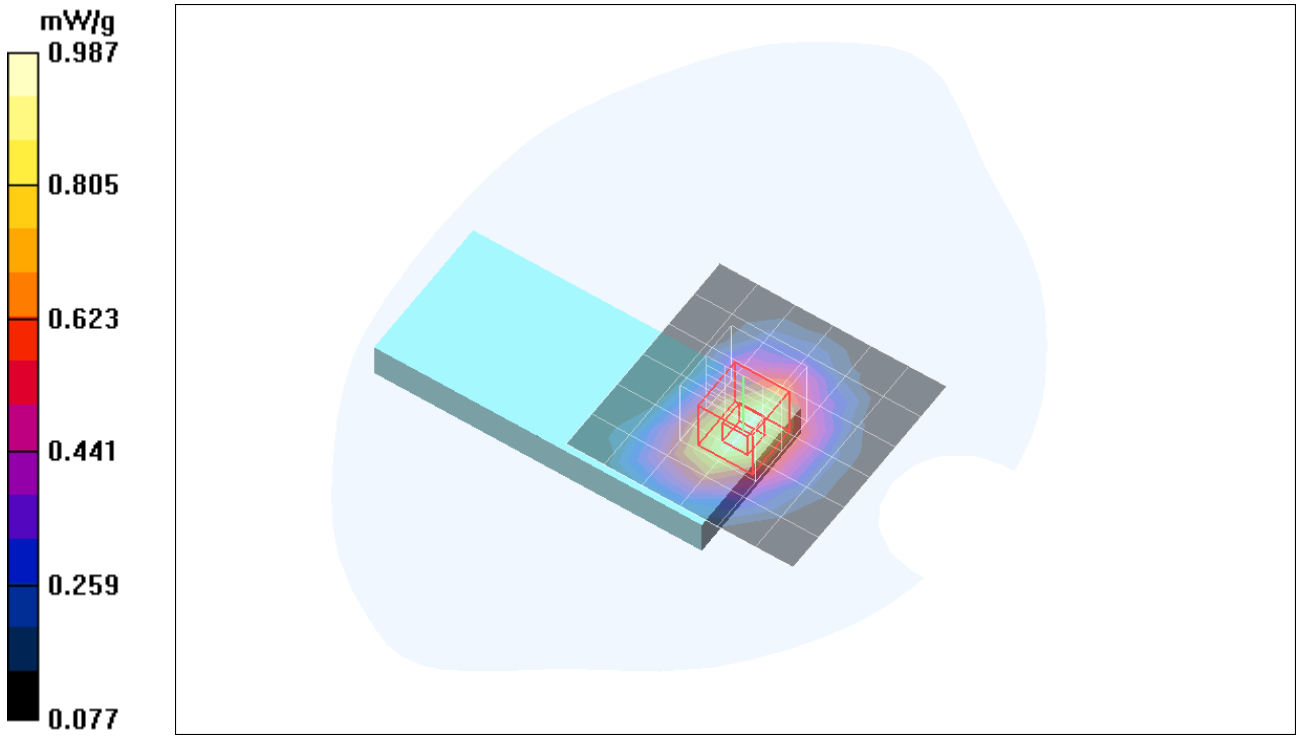
Compaq Presario v2000 CDMA ch 777 1xEV-DO/Zoom Scan (5x5x7)/Cube 0: Measurement grid: dx=7.5mm, dy=7.5mm, dz=5mm
Reference Value = 14.6 V/m; Power Drift = -0.150 dB
Peak SAR (extrapolated) = 1.29 W/kg
SAR(1 g) = 0.919 mW/g; SAR(10 g) = 0.615 mW/g
Info: Interpolated medium parameters used for SAR evaluation.
Maximum value of SAR (measured) = 0.987 mW/g