Test Laboratory: Compliance Certification Services

1_Host # 1_Toshiba Satellite

DUT: Sierra Wireless; Type: AirCard 860; Serial: X1720158064E2

Communication System: GSM850; Frequency: 837 MHz;Duty Cycle: 1:4
Medium parameters used (interpolated): f = 837 MHz; σ = 0.95 mho/m; ε_r = 52.6; ρ = 1000 kg/m^3
Phantom section: Flat Section

Room Ambient Temperature: 23.0 deg. C; Liquid Temperature: 22.0 deg. C

DASY4 Configuration:
- Area Scan setting - Find Secondary Maximum Within: 2.0 dB and with a peak SAR value greater than 0.0012W/kg
- Probe: EX3DV4 - SN3552 ; ConvF(9.72, 9.72, 9.72); Calibrated: 3/19/2005
- Sensor-Surface: 2.5mm (Mechanical Surface Detection)
- Electronics: DAE3 Sn500; Calibrated: 2/7/2005
- Phantom: SAM 2; Type: SAM 2; Serial: 1050
- Measurement SW: DASY4, V4.5 Build 19; Postprocessing SW: SEMCAD, V1.8 Build 146

GSM850 2Slot_M-ch/Area Scan (10x7x1): Measurement grid: dx=15mm, dy=15mm

Info: Interpolated medium parameters used for SAR evaluation!
Maximum value of SAR (measured) = 0.315 mW/g

GSM850 2Slot_M-ch/Zoom Scan (5x5x7)/Cube 0: Measurement grid: dx=7.5mm, dy=7.5mm, dz=5mm

Reference Value = 18.2 V/m; Power Drift = -0.00 dB
Peak SAR (extrapolated) = 0.454 W/kg
SAR(1 g) = 0.283 mW/g; SAR(10 g) = 0.179 mW/g
Info: Interpolated medium parameters used for SAR evaluation!
Maximum value of SAR (measured) = 0.355 mW/g

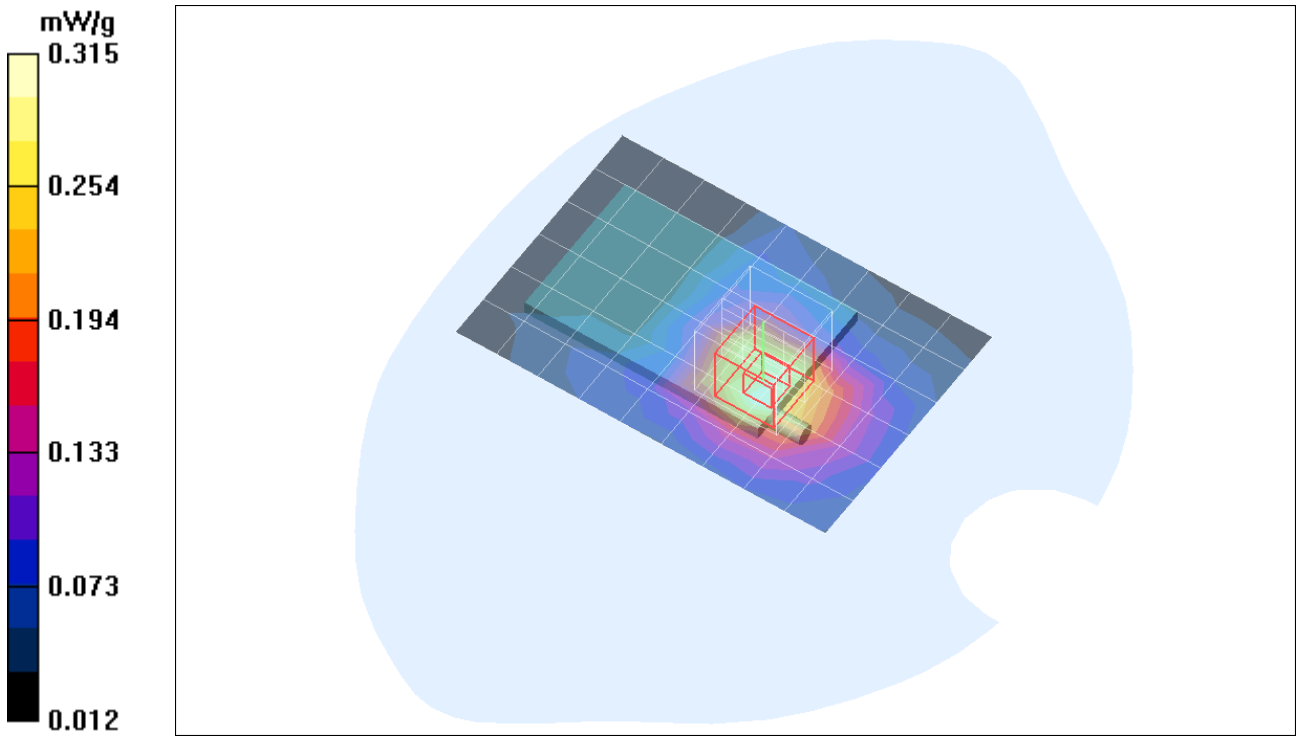

Date/Time: 9/8/2005 4:16:09 PM

Test Laboratory: Compliance Certification Services

1_Host # 1_Toshiba Satellite

DUT: Sierra Wireless; Type: AirCard 860; Serial: X1720158064E2

Communication System: GSM850; Frequency: 837 MHz;Duty Cycle: 1:4

GSM850 2Slot_M-ch/Z Scan (1x1x41): Measurement grid: dx=20mm, dy=20mm, dz=2.5mm

Info: Interpolated medium parameters used for SAR evaluation!
Maximum value of SAR (measured) = 0.340 mW/g

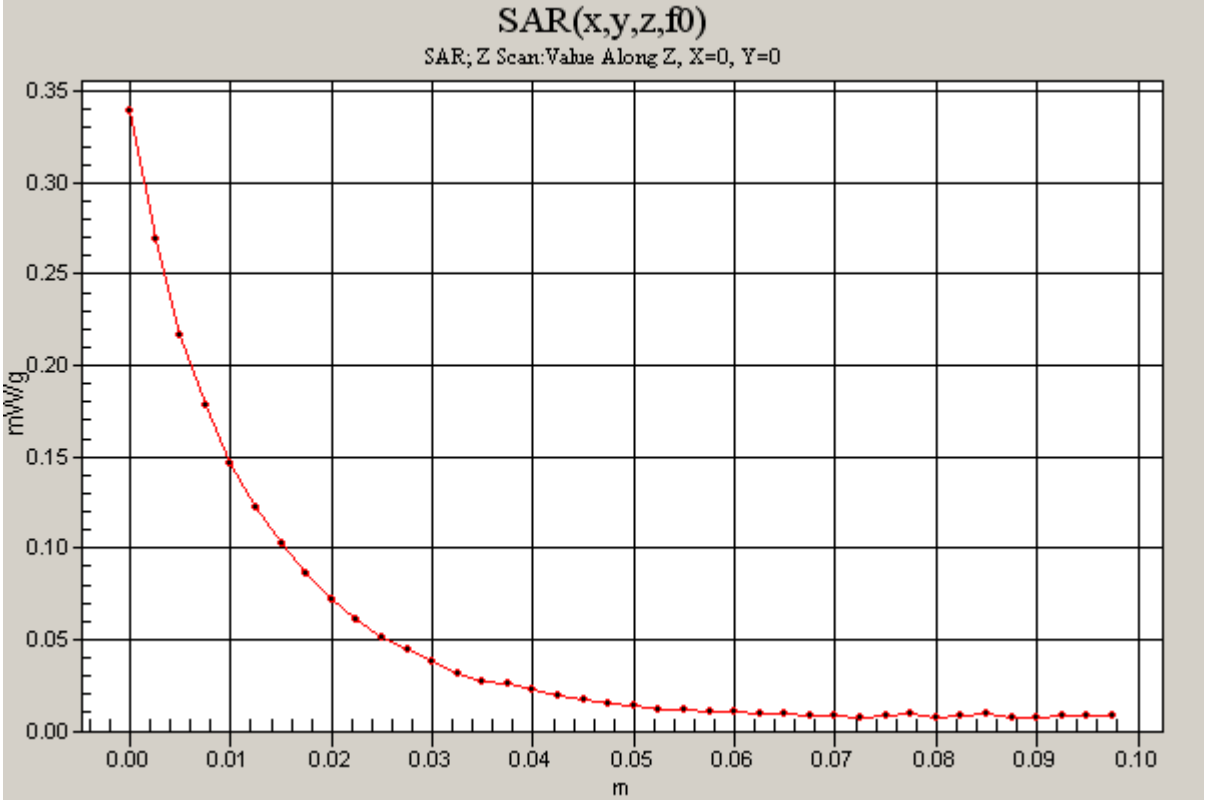

Test Laboratory: Compliance Certification Services

1_Host # 1_Toshiba Satellite

DUT: Sierra Wireless; Type: AirCard 860; Serial: X1720158064E2

Communication System: GSM850; Frequency: 837 MHz;Duty Cycle: 1:4
Medium parameters used (interpolated): f = 837 MHz; σ = 0.95 mho/m; ε_r = 52.6; ρ = 1000 kg/m^3
Phantom section: Flat Section

Room Ambient Temperature: 23.0 deg. C; Liquid Temperature: 22.0 deg. C

DASY4 Configuration:
- Area Scan setting - Find Secondary Maximum Within: 2.0 dB and with a peak SAR value greater than 0.0012W/kg
- Probe: EX3DV4 - SN3552 ; ConvF(9.72, 9.72, 9.72); Calibrated: 3/19/2005
- Sensor-Surface: 2.5mm (Mechanical Surface Detection)
- Electronics: DAE3 Sn500; Calibrated: 2/7/2005
- Phantom: SAM 2; Type: SAM 2; Serial: 1050
- Measurement SW: DASY4, V4.5 Build 19; Postprocessing SW: SEMCAD, V1.8 Build 146

EDGE850 2Slot_M-ch/Area Scan (10x7x1): Measurement grid: dx=15mm, dy=15mm

Info: Interpolated medium parameters used for SAR evaluation!
Maximum value of SAR (measured) = 0.094 mW/g

EDGE850 2Slot_M-ch/Zoom Scan (5x5x7)/Cube 0: Measurement grid: dx=7.5mm, dy=7.5mm, dz=5mm

Reference Value = 9.95 V/m; Power Drift = -0.070 dB
Peak SAR (extrapolated) = 0.135 W/kg
SAR(1 g) = 0.086 mW/g; SAR(10 g) = 0.055 mW/g
Info: Interpolated medium parameters used for SAR evaluation!
Maximum value of SAR (measured) = 0.107 mW/g

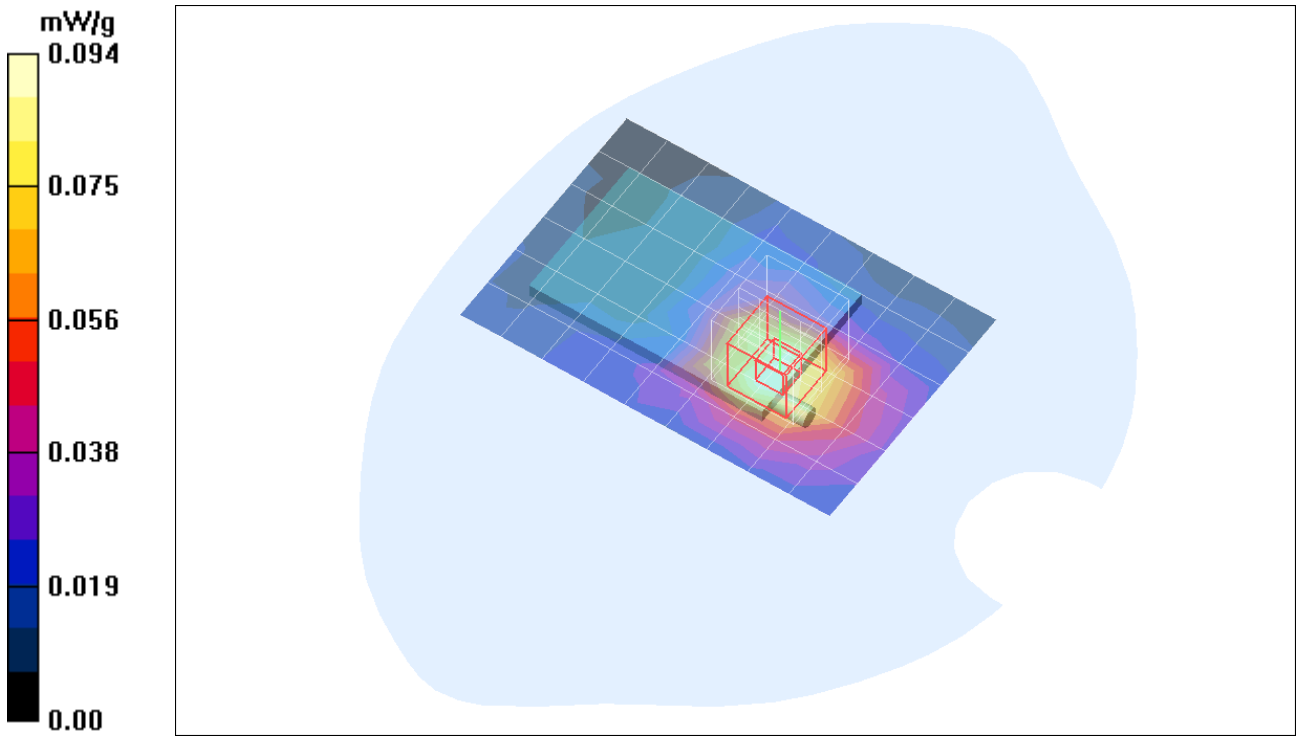

Test Laboratory: Compliance Certification Services

1_Host # 1_Toshiba Satellite

DUT: Sierra Wireless; Type: AirCard 860; Serial: X1720158064E2

Communication System: WCDMA; Frequency: 836.4 MHz;Duty Cycle: 1:1
Medium parameters used (interpolated): f = 836.4 MHz; σ = 0.95 mho/m; ε_r = 52.6; ρ = 1000 kg/m^3
Phantom section: Flat Section

Room Ambient Temperature: 23.0 deg. C; Liquid Temperature: 22.0 deg. C

DASY4 Configuration:
- Area Scan setting - Find Secondary Maximum Within: 2.0 dB and with a peak SAR value greater than 0.0012W/kg
- Probe: EX3DV4 - SN3552 ; ConvF(9.72, 9.72, 9.72); Calibrated: 3/19/2005
- Sensor-Surface: 2.5mm (Mechanical Surface Detection)
- Electronics: DAE3 Sn500; Calibrated: 2/7/2005
- Phantom: SAM 2; Type: SAM 2; Serial: 1050
- Measurement SW: DASY4, V4.5 Build 19; Postprocessing SW: SEMCAD, V1.8 Build 146

WCDMA850_M-ch 4182/Area Scan (10x7x1): Measurement grid: dx=15mm, dy=15mm

Info: Interpolated medium parameters used for SAR evaluation!
Maximum value of SAR (measured) = 0.199 mW/g

WCDMA850_M-ch 4182/Zoom Scan (5x5x7)/Cube 0: Measurement grid: dx=7.5mm, dy=7.5mm, dz=5mm

Reference Value = 13.8 V/m; Power Drift = -0.132 dB
Peak SAR (extrapolated) = 0.256 W/kg
SAR(1 g) = 0.167 mW/g; SAR(10 g) = 0.110 mW/g
Info: Interpolated medium parameters used for SAR evaluation!
Maximum value of SAR (measured) = 0.204 mW/g

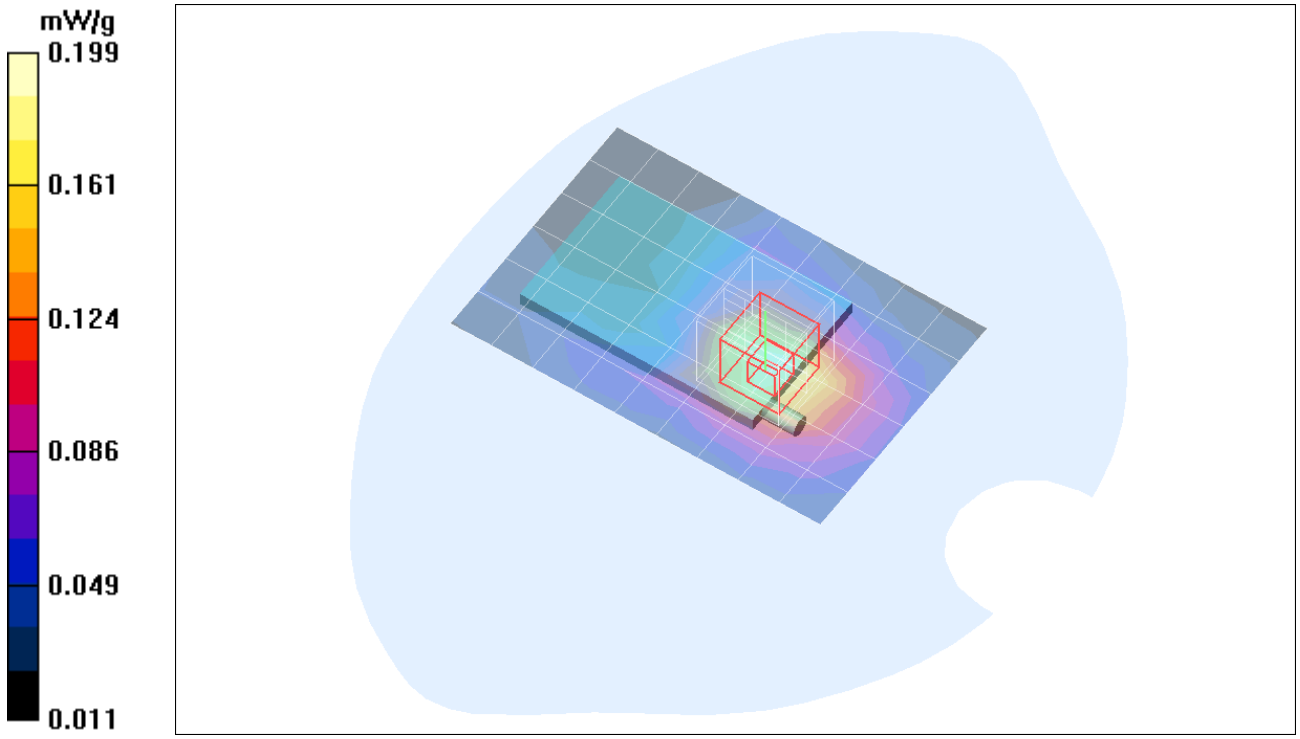

Test Laboratory: Compliance Certification Services

2_Host # 2_NEC VERSA SX

DUT: Sierra Wireless; Type: AirCard 860; Serial: X1720158064E2

Communication System: GSM850; Frequency: 824.2 MHz;Duty Cycle: 1:4
Medium parameters used (interpolated): f = 824.2 MHz; σ = 0.939 mho/m; ε_r = 52.7; ρ = 1000 kg/m^3
Phantom section: Flat Section

Room Ambient Temperature: 23.0 deg. C; Liquid Temperature: 22.0 deg. C

DASY4 Configuration:
- Area Scan setting - Find Secondary Maximum Within: 2.0 dB and with a peak SAR value greater than 0.0012W/kg
- Probe: EX3DV4 - SN3552 ; ConvF(9.72, 9.72, 9.72); Calibrated: 3/19/2005
- Sensor-Surface: 2.5mm (Mechanical Surface Detection)
- Electronics: DAE3 Sn500; Calibrated: 2/7/2005
- Phantom: SAM 2; Type: SAM 2; Serial: 1050
- Measurement SW: DASY4, V4.5 Build 19; Postprocessing SW: SEMCAD, V1.8 Build 146

GSM850 2Slot_L-ch/Area Scan (10x7x1): Measurement grid: dx=15mm, dy=15mm

Info: Interpolated medium parameters used for SAR evaluation!
Maximum value of SAR (measured) = 0.334 mW/g

GSM850 2Slot_L-ch/Zoom Scan (5x5x7)/Cube 0: Measurement grid: dx=7.5mm, dy=7.5mm, dz=5mm

Reference Value = 19.0 V/m; Power Drift = -0.010 dB
Peak SAR (extrapolated) = 0.473 W/kg
SAR(1 g) = 0.310 mW/g; SAR(10 g) = 0.206 mW/g
Info: Interpolated medium parameters used for SAR evaluation!
Maximum value of SAR (measured) = 0.377 mW/g

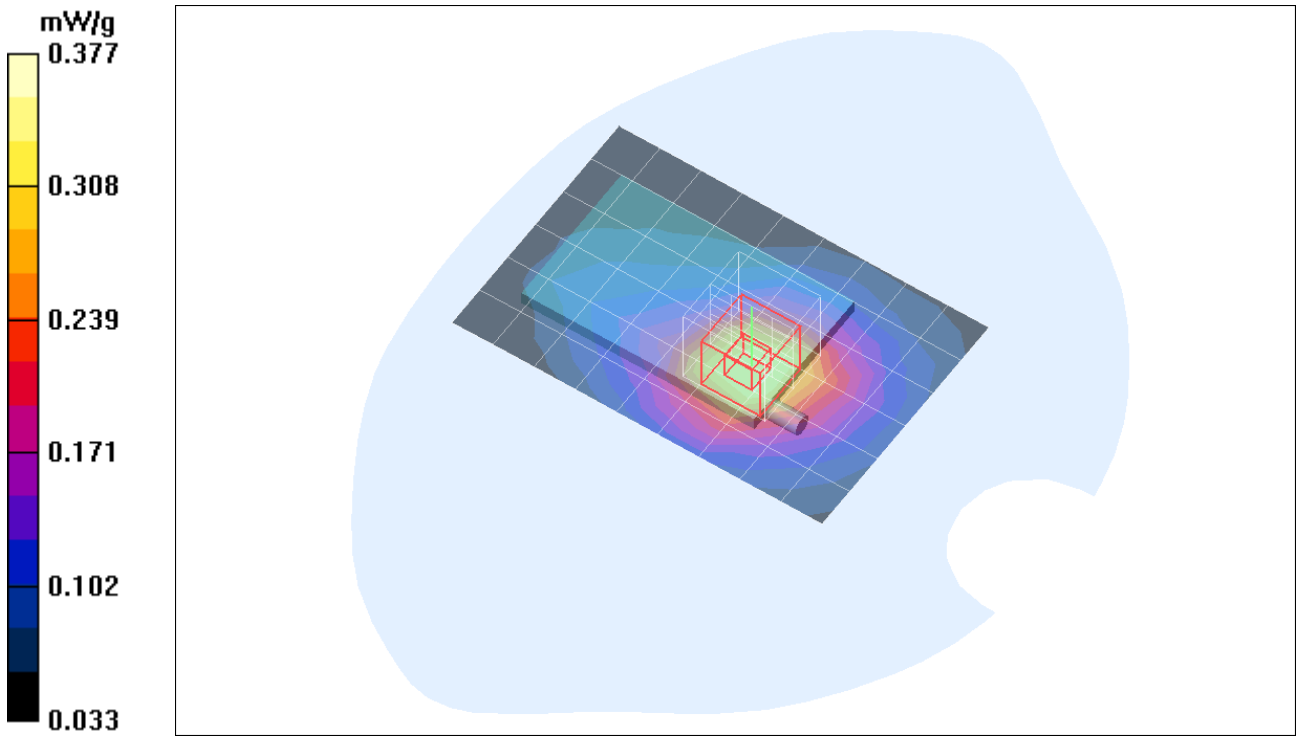

Test Laboratory: Compliance Certification Services

2_Host # 2_NEC VERSA SX

DUT: Sierra Wireless; Type: AirCard 860; Serial: X1720158064E2

Communication System: GSM850; Frequency: 837 MHz;Duty Cycle: 1:4
Medium parameters used (interpolated): f = 837 MHz; σ = 0.977 mho/m; ε_r = 54.4; ρ = 1000 kg/m^3
Phantom section: Flat Section

Room Ambient Temperature: 23.5 deg. C; Liquid Temperature: 23.0 deg. C

DASY4 Configuration:
- Area Scan setting - Find Secondary Maximum Within: 2.0 dB and with a peak SAR value greater than 0.0012W/kg
- Probe: EX3DV4 - SN3552 ; ConvF(9.72, 9.72, 9.72); Calibrated: 3/19/2005
- Sensor-Surface: 2.5mm (Mechanical Surface Detection)
- Electronics: DAE3 Sn500; Calibrated: 2/7/2005
- Phantom: SAM 2; Type: SAM 2; Serial: 1050
- Measurement SW: DASY4, V4.5 Build 19; Postprocessing SW: SEMCAD, V1.8 Build 146

GSM850 2Slot_M-ch/Area Scan (10x7x1): Measurement grid: dx=15mm, dy=15mm

Info: Interpolated medium parameters used for SAR evaluation!
Maximum value of SAR (measured) = 0.403 mW/g

GSM850 2Slot_M-ch/Zoom Scan (5x5x7)/Cube 0: Measurement grid: dx=7.5mm, dy=7.5mm, dz=5mm

Reference Value = 20.5 V/m; Power Drift = -0.013 dB
Peak SAR (extrapolated) = 0.555 W/kg
SAR(1 g) = 0.368 mW/g; SAR(10 g) = 0.242 mW/g
Info: Interpolated medium parameters used for SAR evaluation!
Maximum value of SAR (measured) = 0.446 mW/g

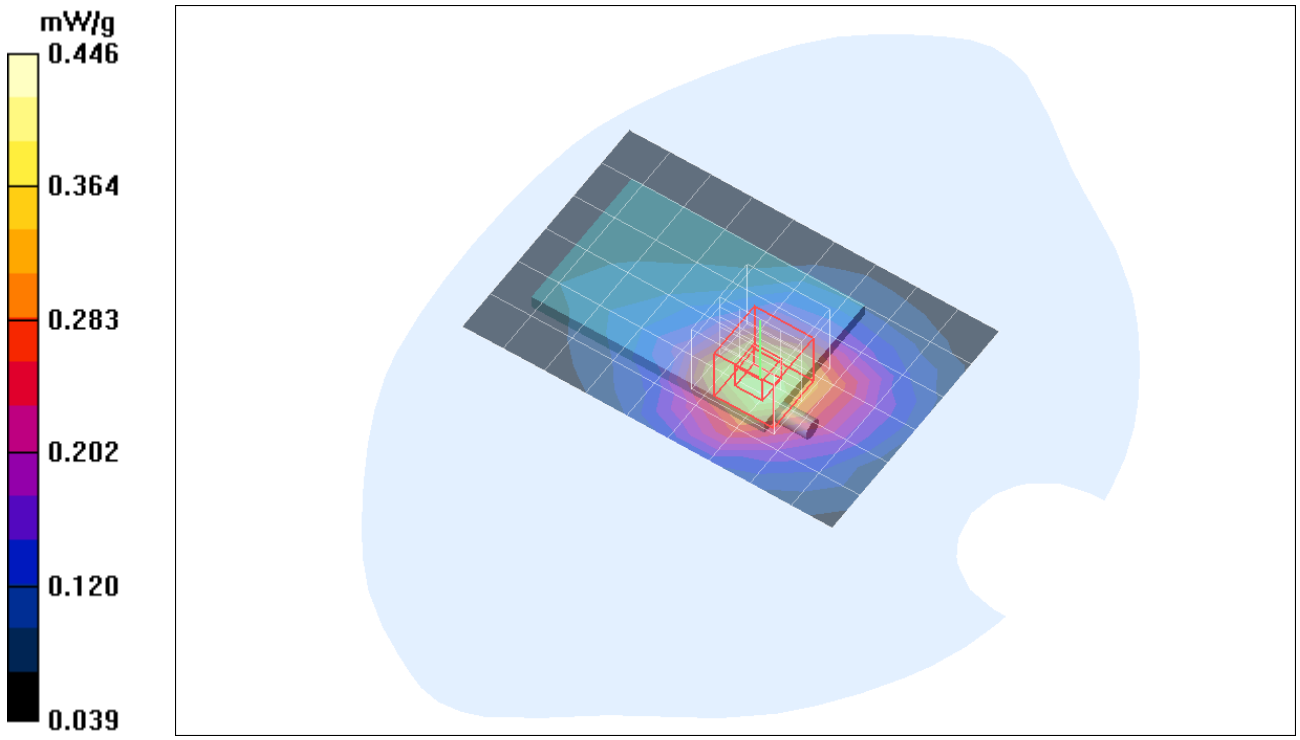

Test Laboratory: Compliance Certification Services

2_Host # 2_NEC VERSA SX

DUT: Sierra Wireless; Type: AirCard 860; Serial: X1720158064E2

Communication System: GSM850; Frequency: 848.8 MHz;Duty Cycle: 1:4
Medium parameters used (interpolated): f = 848.8 MHz; σ = 0.961 mho/m; ε_r = 52.5; ρ = 1000 kg/m^3
Phantom section: Flat Section

Room Ambient Temperature: 23.0 deg. C; Liquid Temperature: 22.0 deg. C

DASY4 Configuration:
- Area Scan setting - Find Secondary Maximum Within: 2.0 dB and with a peak SAR value greater than 0.0012W/kg
- Probe: EX3DV4 - SN3552 ; ConvF(9.72, 9.72, 9.72); Calibrated: 3/19/2005
- Sensor-Surface: 2.5mm (Mechanical Surface Detection)
- Electronics: DAE3 Sn500; Calibrated: 2/7/2005
- Phantom: SAM 2; Type: SAM 2; Serial: 1050
- Measurement SW: DASY4, V4.5 Build 19; Postprocessing SW: SEMCAD, V1.8 Build 146

GSM850 2Slot_H-ch/Area Scan (10x7x1): Measurement grid: dx=15mm, dy=15mm

Info: Interpolated medium parameters used for SAR evaluation!
Maximum value of SAR (measured) = 0.442 mW/g

GSM850 2Slot_H-ch/Zoom Scan (5x5x7)/Cube 0: Measurement grid: dx=7.5mm, dy=7.5mm, dz=5mm

Reference Value = 21.7 V/m; Power Drift = -0.051 dB
Peak SAR (extrapolated) = 0.631 W/kg
SAR(1 g) = 0.407 mW/g; SAR(10 g) = 0.265 mW/g
Info: Interpolated medium parameters used for SAR evaluation!
Maximum value of SAR (measured) = 0.503 mW/g

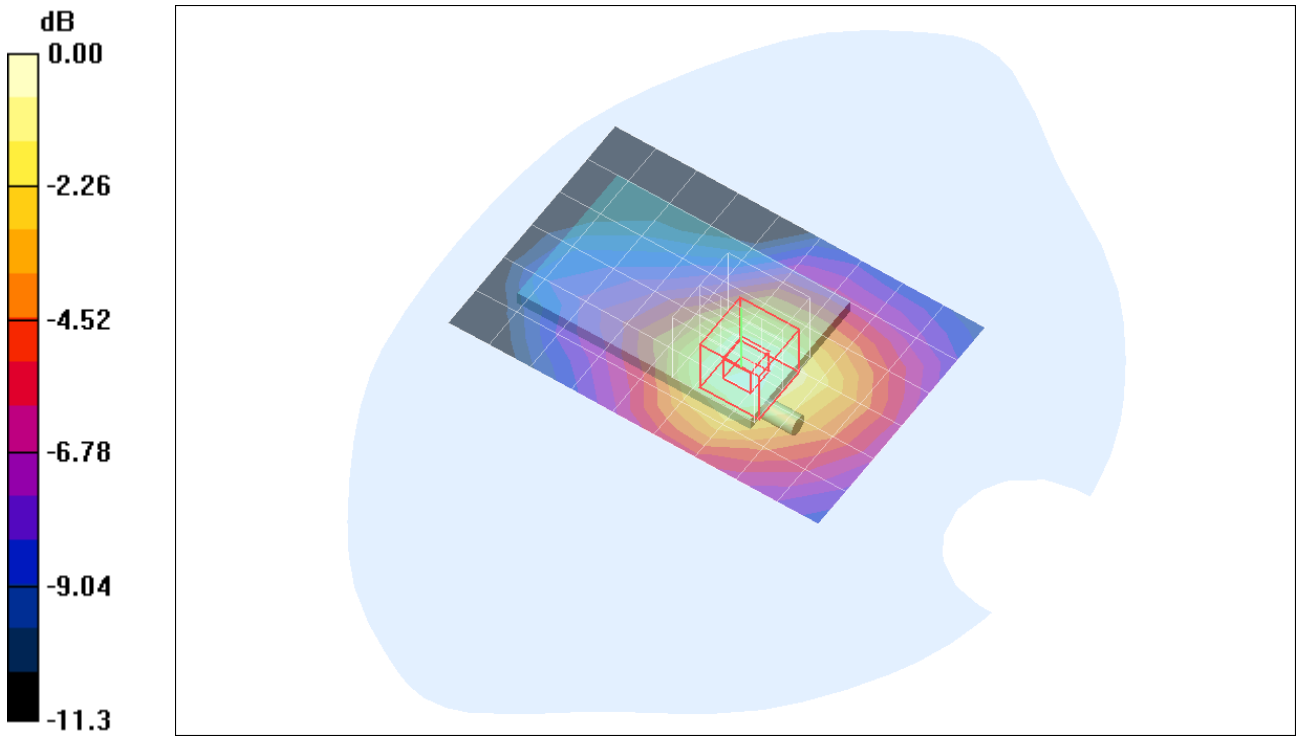

0 dB = 0.503mW/g

Date/Time: 9/8/2005 2:15:26 PM

Test Laboratory: Compliance Certification Services

2_Host # 2_NEC VERSA SX

DUT: Sierra Wireless; Type: AirCard 860; Serial: X1720158064E2

Communication System: GSM850; Frequency: 848.8 MHz;Duty Cycle: 1:4

GSM850 2Slot_H-ch/Z Scan (1x1x41): Measurement grid: dx=20mm, dy=20mm, dz=2.5mm
Info: Interpolated medium parameters used for SAR evaluation!
Maximum value of SAR (measured) = 0.491 mW/g

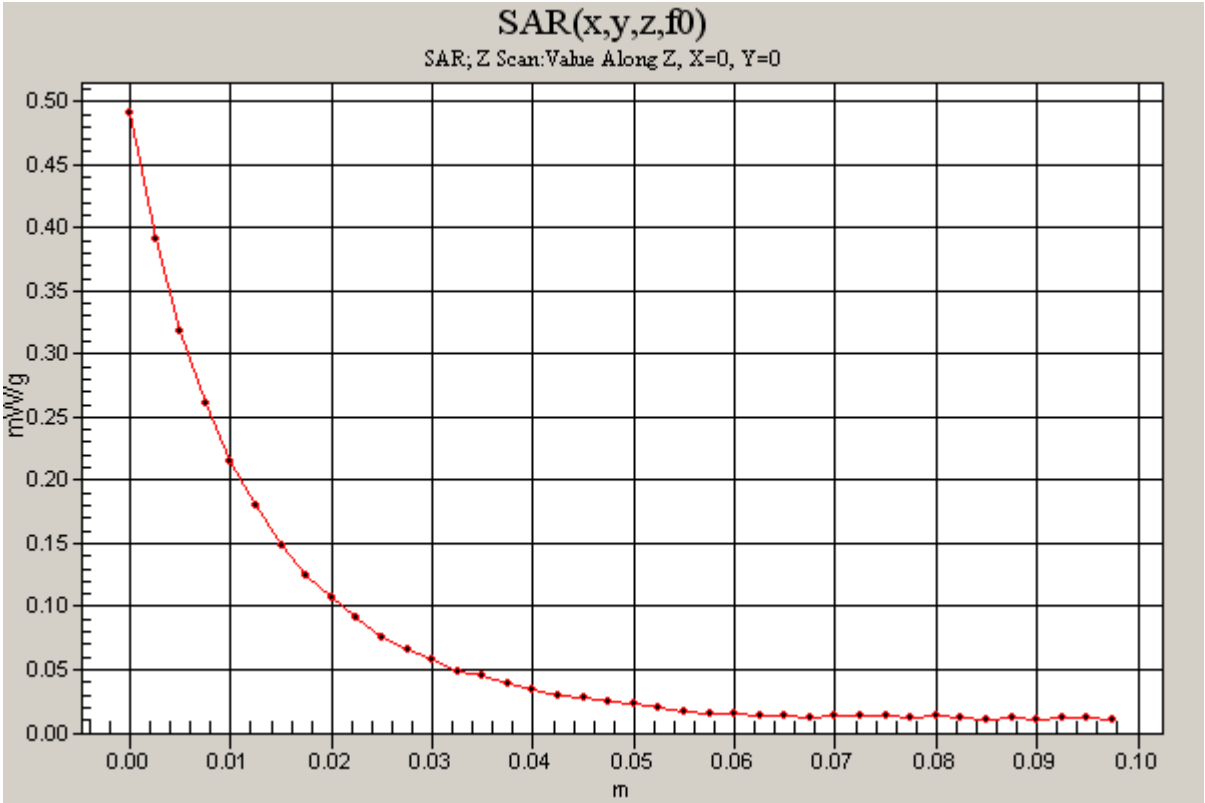

Test Laboratory: Compliance Certification Services

2_Host # 2_NEC VERSA SX

DUT: Sierra Wireless; Type: AirCard 860; Serial: X1720158064E2

Communication System: GSM850; Frequency: 837 MHz;Duty Cycle: 1:4
Medium parameters used (interpolated): f = 837 MHz; σ = 0.977 mho/m; ε_r = 54.4; ρ = 1000 kg/m^3
Phantom section: Flat Section

Room Ambient Temperature: 23.5 deg. C; Liquid Temperature: 23.0 deg. C

DASY4 Configuration:
- Area Scan setting - Find Secondary Maximum Within: 2.0 dB and with a peak SAR value greater than 0.0012W/kg
- Probe: EX3DV4 - SN3552 ; ConvF(9.72, 9.72, 9.72); Calibrated: 3/19/2005
- Sensor-Surface: 2.5mm (Mechanical Surface Detection)
- Electronics: DAE3 Sn500; Calibrated: 2/7/2005
- Phantom: SAM 2; Type: SAM 2; Serial: 1050
- Measurement SW: DASY4, V4.5 Build 19; Postprocessing SW: SEMCAD, V1.8 Build 146

EDGE850 2Slot_M-ch/Area Scan (10x7x1): Measurement grid: dx=15mm, dy=15mm

Info: Interpolated medium parameters used for SAR evaluation!
Maximum value of SAR (measured) = 0.140 mW/g

EDGE850 2Slot_M-ch/Zoom Scan (5x5x7)/Cube 0: Measurement grid: dx=7.5mm, dy=7.5mm, dz=5mm

Reference Value = 12.2 V/m; Power Drift = -0.062 dB
Peak SAR (extrapolated) = 0.195 W/kg
SAR(1 g) = 0.126 mW/g; SAR(10 g) = 0.085 mW/g
Info: Interpolated medium parameters used for SAR evaluation!
Maximum value of SAR (measured) = 0.152 mW/g

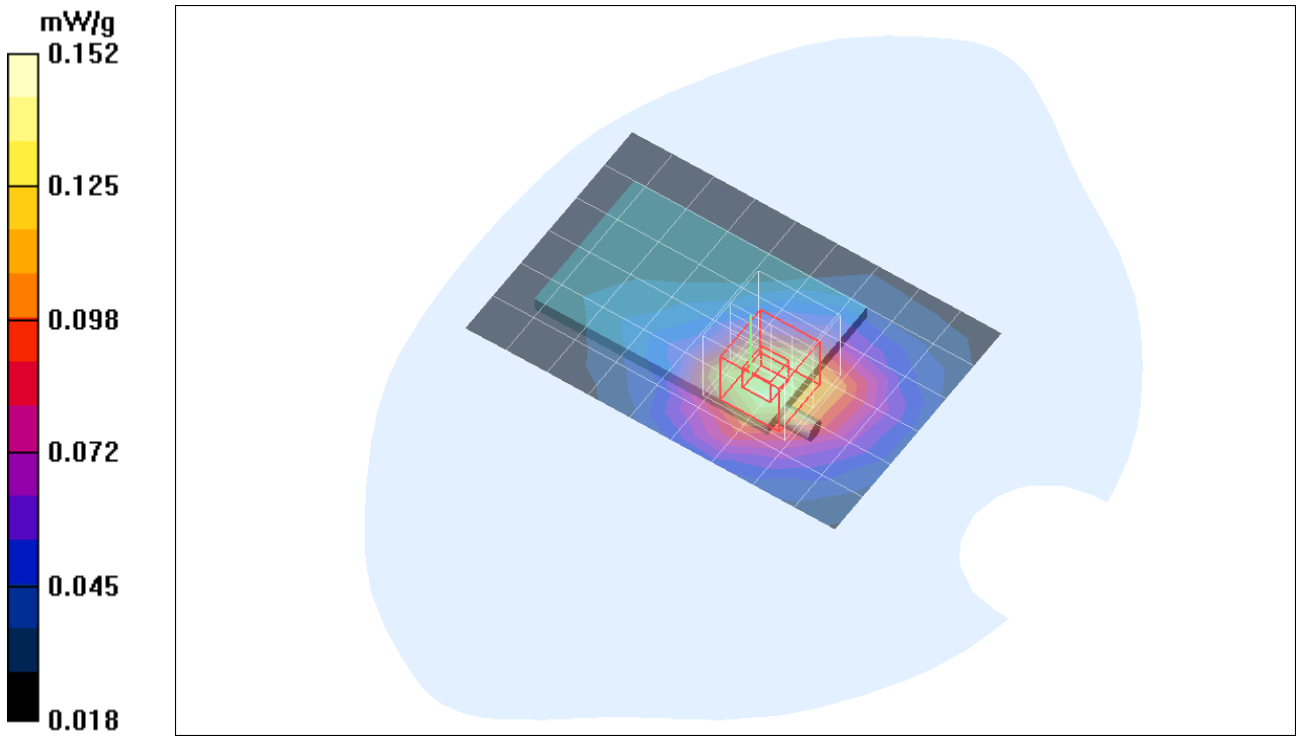

Test Laboratory: Compliance Certification Services

2_Host # 2_NEC VERSA SX

DUT: Sierra Wireless; Type: AirCard 860; Serial: X1720158064E2

Communication System: WCDMA; Frequency: 826.4 MHz;Duty Cycle: 1:1
Medium parameters used (interpolated): f = 826.4 MHz; σ = 0.941 mho/m; ε_r = 52.7; ρ = 1000 kg/m^3
Phantom section: Flat Section

Room Ambient Temperature: 23.0 deg. C; Liquid Temperature: 22.0 deg. C

DASY4 Configuration:
- Area Scan setting - Find Secondary Maximum Within: 2.0 dB and with a peak SAR value greater than 0.0012W/kg
- Probe: EX3DV4 - SN3552 ; ConvF(9.72, 9.72, 9.72); Calibrated: 3/19/2005
- Sensor-Surface: 2.5mm (Mechanical Surface Detection)
- Electronics: DAE3 Sn500; Calibrated: 2/7/2005
- Phantom: SAM 2; Type: SAM 2; Serial: 1050
- Measurement SW: DASY4, V4.5 Build 19; Postprocessing SW: SEMCAD, V1.8 Build 146

WCDMA850_M-ch 4132/Area Scan (10x7x1): Measurement grid: dx=15mm, dy=15mm
Info: Interpolated medium parameters used for SAR evaluation!
Maximum value of SAR (measured) = 0.203 mW/g

WCDMA850_M-ch 4132/Zoom Scan (5x5x7)/Cube 0: Measurement grid: dx=7.5mm, dy=7.5mm, dz=5mm
Reference Value = 14.8 V/m; Power Drift = -0.048 dB
Peak SAR (extrapolated) = 0.279 W/kg
SAR(1 g) = 0.178 mW/g; SAR(10 g) = 0.117 mW/g
Info: Interpolated medium parameters used for SAR evaluation!
Maximum value of SAR (measured) = 0.216 mW/g

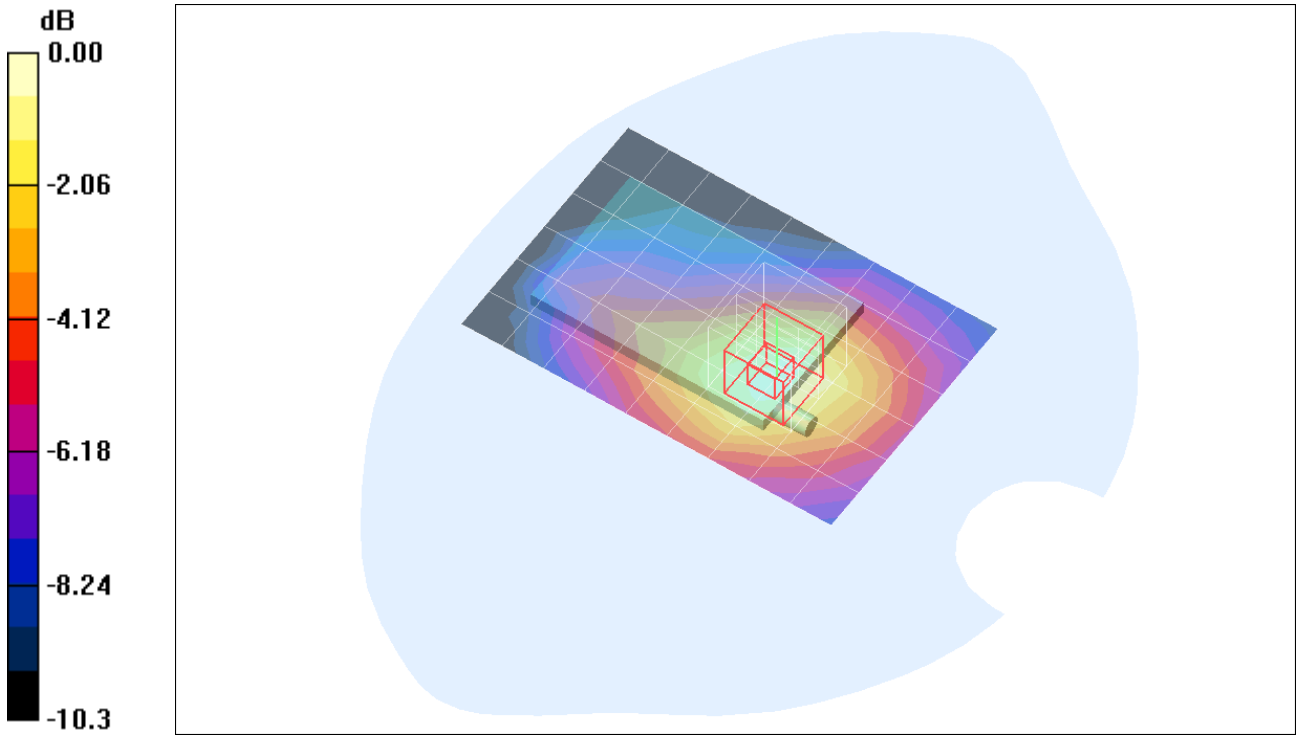

0 dB = 0.216mW/g

Test Laboratory: Compliance Certification Services

2_Host # 2_NEC VERSA SX

DUT: Sierra Wireless; Type: AirCard 860; Serial: X1720158064E2

Communication System: WCDMA; Frequency: 836.4 MHz;Duty Cycle: 1:1
Medium parameters used (interpolated): f = 836.4 MHz; σ = 0.976 mho/m; ε_r = 54.4; ρ = 1000 kg/m^3
Phantom section: Flat Section

Room Ambient Temperature: 23.5 deg. C; Liquid Temperature: 23.0 deg. C

DASY4 Configuration:
- Area Scan setting - Find Secondary Maximum Within: 2.0 dB and with a peak SAR value greater than 0.0012W/kg
- Probe: EX3DV4 - SN3552 ; ConvF(9.72, 9.72, 9.72); Calibrated: 3/19/2005
- Sensor-Surface: 2.5mm (Mechanical Surface Detection)
- Electronics: DAE3 Sn500; Calibrated: 2/7/2005
- Phantom: SAM 2; Type: SAM 2; Serial: 1050
- Measurement SW: DASY4, V4.5 Build 19; Postprocessing SW: SEMCAD, V1.8 Build 146

WCDMA850_M-ch 4182/Area Scan (10x7x1): Measurement grid: dx=15mm, dy=15mm

Info: Interpolated medium parameters used for SAR evaluation!
Maximum value of SAR (measured) = 0.210 mW/g

WCDMA850_M-ch 4182/Zoom Scan (5x5x7)/Cube 0: Measurement grid: dx=7.5mm, dy=7.5mm, dz=5mm

Reference Value = 15.1 V/m; Power Drift = -0.149 dB
Peak SAR (extrapolated) = 0.269 W/kg
SAR(1 g) = 0.177 mW/g; SAR(10 g) = 0.120 mW/g
Info: Interpolated medium parameters used for SAR evaluation!
Maximum value of SAR (measured) = 0.214 mW/g

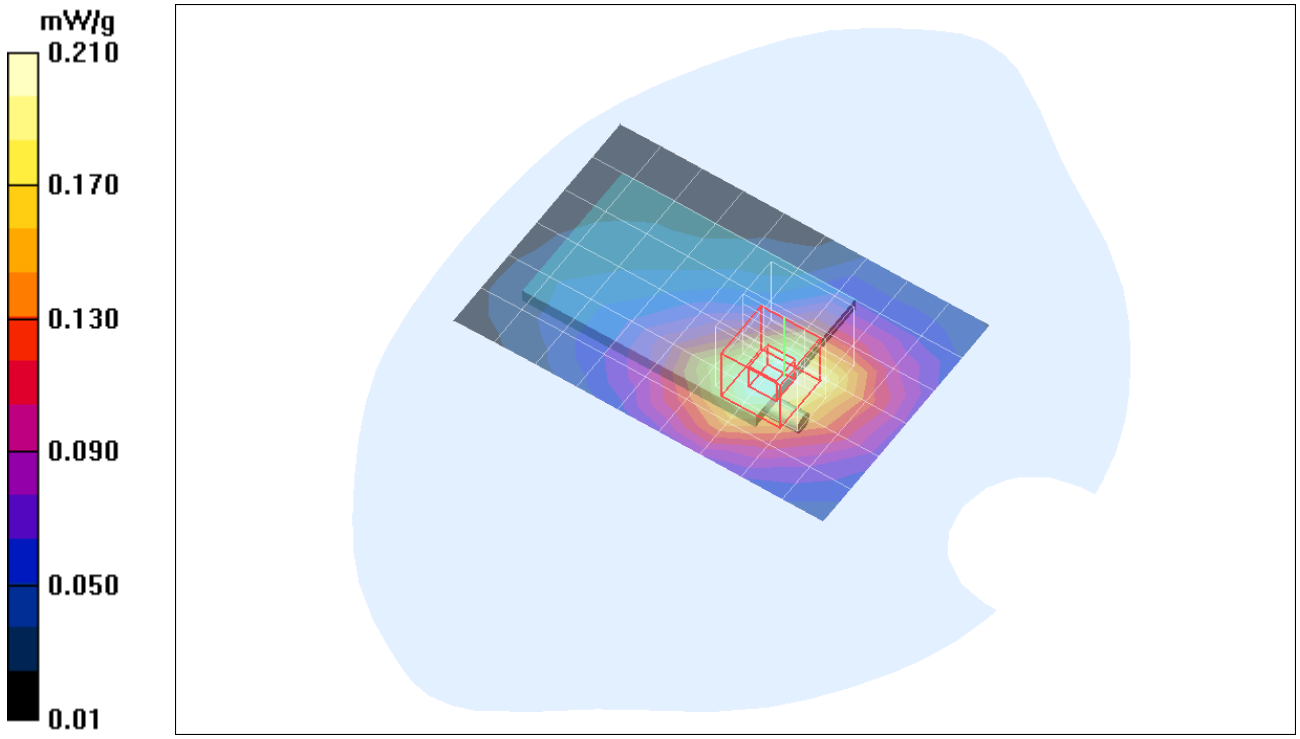

Test Laboratory: Compliance Certification Services

2_Host # 2_NEC VERSA SX

DUT: Sierra Wireless; Type: AirCard 860; Serial: X1720158064E2

Communication System: WCDMA; Frequency: 846.6 MHz;Duty Cycle: 1:1
Medium parameters used (interpolated): f = 846.6 MHz; σ = 0.958 mho/m; ε_r = 52.5; ρ = 1000 kg/m^3
Phantom section: Flat Section

Room Ambient Temperature: 23.0 deg. C; Liquid Temperature: 22.0 deg. C

DASY4 Configuration:
- Area Scan setting - Find Secondary Maximum Within: 2.0 dB and with a peak SAR value greater than 0.0012W/kg
- Probe: EX3DV4 - SN3552 ; ConvF(9.72, 9.72, 9.72); Calibrated: 3/19/2005
- Sensor-Surface: 2.5mm (Mechanical Surface Detection)
- Electronics: DAE3 Sn500; Calibrated: 2/7/2005
- Phantom: SAM 2; Type: SAM 2; Serial: 1050
- Measurement SW: DASY4, V4.5 Build 19; Postprocessing SW: SEMCAD, V1.8 Build 146

WCDMA850_M-ch 4233/Area Scan (10x7x1): Measurement grid: dx=15mm, dy=15mm
Info: Interpolated medium parameters used for SAR evaluation!
Maximum value of SAR (measured) = 0.249 mW/g

WCDMA850_M-ch 4233/Zoom Scan (5x5x7)/Cube 0: Measurement grid: dx=7.5mm, dy=7.5mm, dz=5mm
Reference Value = 16.6 V/m; Power Drift = -0.054 dB
Peak SAR (extrapolated) = 0.343 W/kg
SAR(1 g) = 0.216 mW/g; SAR(10 g) = 0.139 mW/g
Info: Interpolated medium parameters used for SAR evaluation!
Maximum value of SAR (measured) = 0.264 mW/g

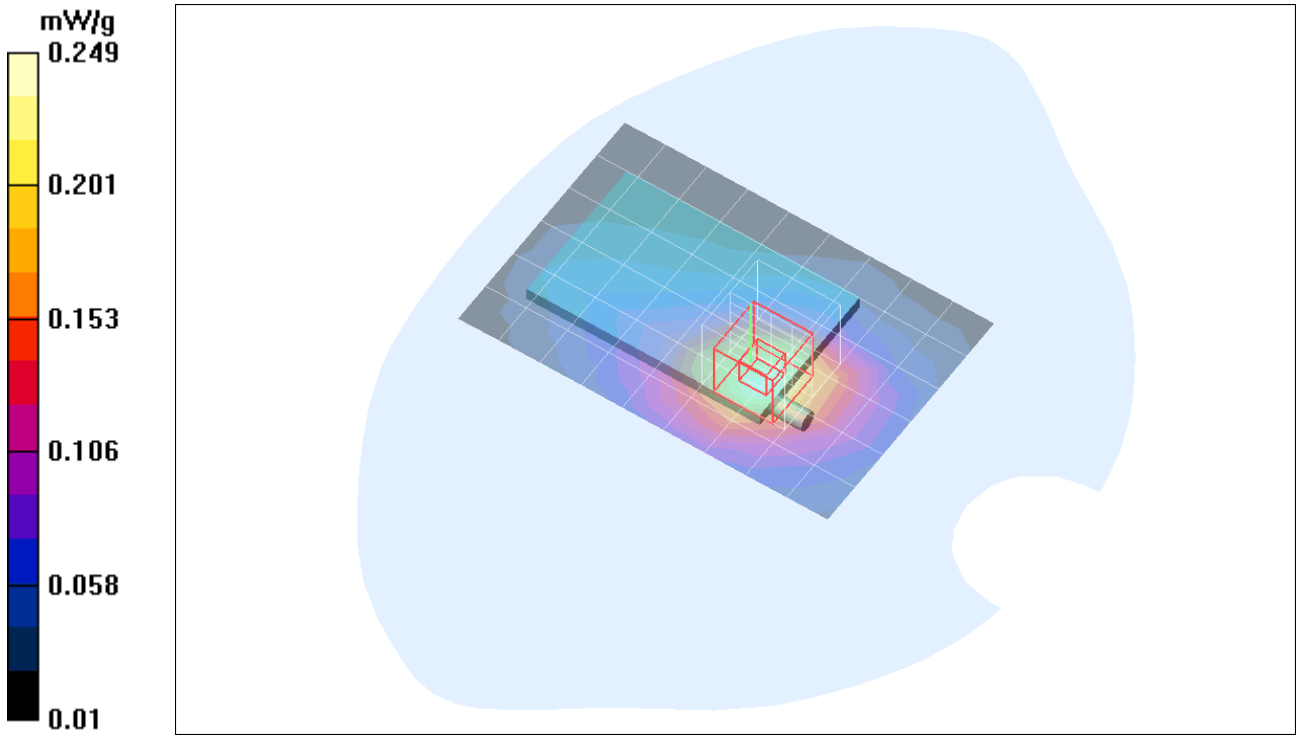

Date/Time: 9/8/2005 3:10:40 PM

Test Laboratory: Compliance Certification Services

2_Host # 2_NEC VERSA SX

DUT: Sierra Wireless; Type: AirCard 860; Serial: X1720158064E2

Communication System: WCDMA; Frequency: 826.4 MHz;Duty Cycle: 1:1

WCDMA850_M-ch 4233/Z Scan (1x1x41): Measurement grid: dx=20mm, dy=20mm, dz=2.5mm

Info: Interpolated medium parameters used for SAR evaluation!
Maximum value of SAR (measured) = 0.256 mW/g

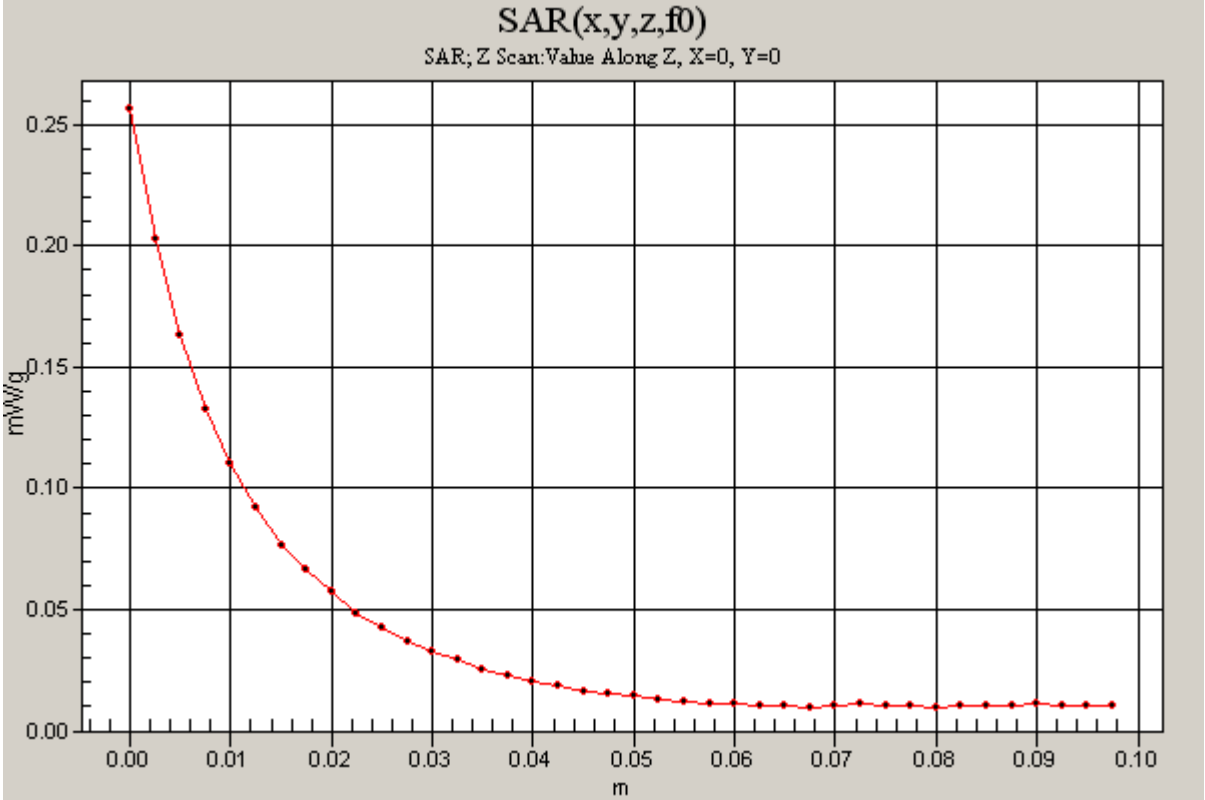

Test Laboratory: Compliance Certification Services

3_Host # 3_Compaq ARMADA E500

DUT: Sierra Wireless; Type: AirCard 860; Serial: X1720158064E2

Communication System: GSM850; Frequency: 837 MHz;Duty Cycle: 1:4
Medium parameters used (interpolated): f = 837 MHz; σ = 0.977 mho/m; ε_r = 54.4; ρ = 1000 kg/m^3
Phantom section: Flat Section

Room Ambient Temperature: 23.5 deg. C; Liquid Temperature: 23.0 deg. C

DASY4 Configuration:
- Area Scan setting - Find Secondary Maximum Within: 2.0 dB and with a peak SAR value greater than 0.0012W/kg
- Probe: EX3DV4 - SN3552 ; ConvF(9.72, 9.72, 9.72); Calibrated: 3/19/2005
- Sensor-Surface: 2.5mm (Mechanical Surface Detection)
- Electronics: DAE3 Sn500; Calibrated: 2/7/2005
- Phantom: SAM 2; Type: SAM 2; Serial: 1050
- Measurement SW: DASY4, V4.5 Build 19; Postprocessing SW: SEMCAD, V1.8 Build 146

GSM850 2Slot_M-ch/Area Scan (10x8x1): Measurement grid: dx=15mm, dy=15mm
Maximum value of SAR (measured) = 0.144 mW/g

GSM850 2Slot_M-ch/Zoom Scan (5x5x7)/Cube 0: Measurement grid: dx=7.5mm, dy=7.5mm, dz=5mm
Reference Value = 10.6 V/m; Power Drift = -0.123 dB
Peak SAR (extrapolated) = 0.180 W/kg
SAR(1 g) = 0.122 mW/g; SAR(10 g) = 0.083 mW/g
Info: Interpolated medium parameters used for SAR evaluation!
Maximum value of SAR (measured) = 0.145 mW/g

GSM850 2Slot_M-ch/Zoom Scan (5x5x7)/Cube 1: Measurement grid: dx=7.5mm, dy=7.5mm, dz=5mm
Reference Value = 10.6 V/m; Power Drift = -0.123 dB
Peak SAR (extrapolated) = 0.138 W/kg
SAR(1 g) = 0.105 mW/g; SAR(10 g) = 0.078 mW/g
Info: Interpolated medium parameters used for SAR evaluation!
Maximum value of SAR (measured) = 0.121 mW/g

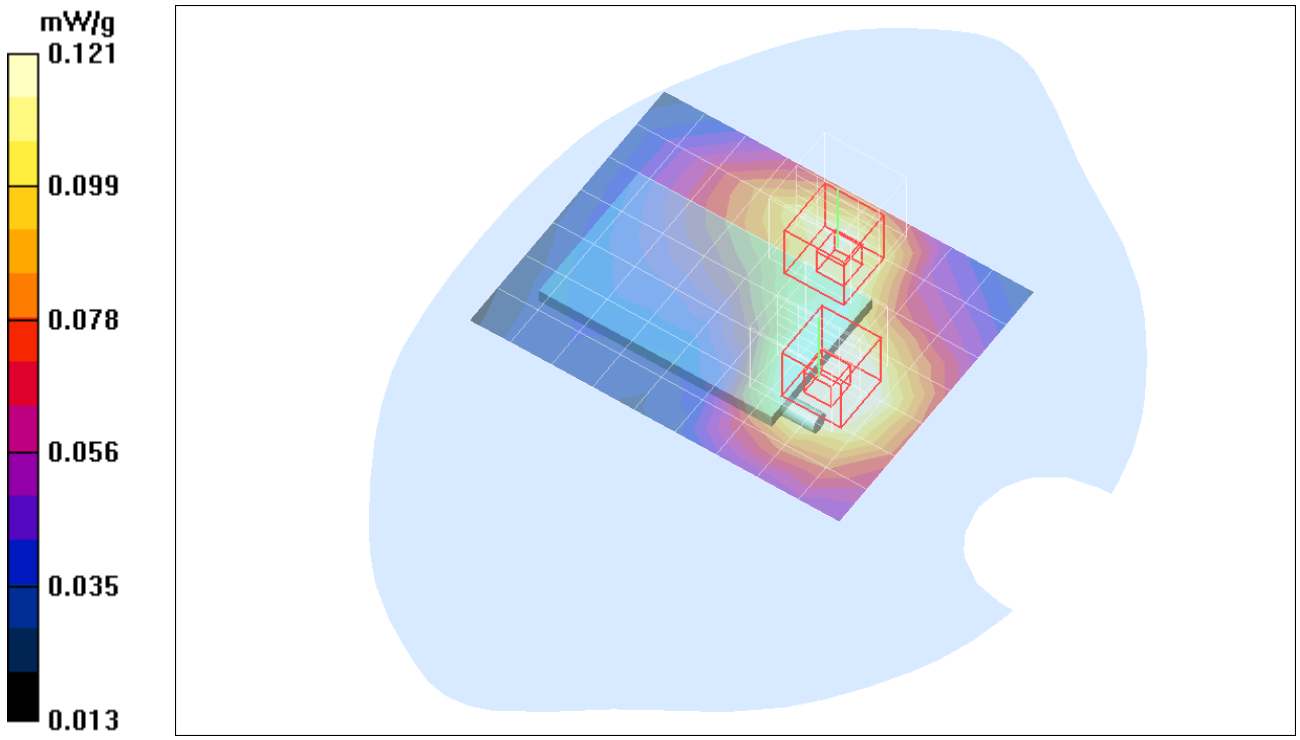

Test Laboratory: Compliance Certification Services

3_Host # 3_Compaq ARMADA E500

DUT: Sierra Wireless; Type: AirCard 860; Serial: X1720158064E2

Communication System: GSM850; Frequency: 837 MHz;Duty Cycle: 1:4
Medium parameters used (interpolated): f = 837 MHz; σ = 0.977 mho/m; ε_r = 54.4; ρ = 1000 kg/m^3
Phantom section: Flat Section

Room Ambient Temperature: 23.5 deg. C; Liquid Temperature: 23.0 deg. C

DASY4 Configuration:
- Area Scan setting - Find Secondary Maximum Within: 2.0 dB and with a peak SAR value greater than 0.0012W/kg
- Probe: EX3DV4 - SN3552 ; ConvF(9.72, 9.72, 9.72); Calibrated: 3/19/2005
- Sensor-Surface: 2.5mm (Mechanical Surface Detection)
- Electronics: DAE3 Sn500; Calibrated: 2/7/2005
- Phantom: SAM 2; Type: SAM 2; Serial: 1050
- Measurement SW: DASY4, V4.5 Build 19; Postprocessing SW: SEMCAD, V1.8 Build 146

GSM850 2Slot_M-ch/Area Scan (10x8x1): Measurement grid: dx=15mm, dy=15mm
Maximum value of SAR (measured) = 0.144 mW/g

GSM850 2Slot_M-ch/Zoom Scan (5x5x7)/Cube 0: Measurement grid: dx=7.5mm, dy=7.5mm, dz=5mm
Reference Value = 10.6 V/m; Power Drift = -0.123 dB
Peak SAR (extrapolated) = 0.180 W/kg
SAR(1 g) = 0.122 mW/g; SAR(10 g) = 0.083 mW/g
Info: Interpolated medium parameters used for SAR evaluation!
Maximum value of SAR (measured) = 0.145 mW/g

GSM850 2Slot_M-ch/Zoom Scan (5x5x7)/Cube 1: Measurement grid: dx=7.5mm, dy=7.5mm, dz=5mm
Reference Value = 10.6 V/m; Power Drift = -0.123 dB
Peak SAR (extrapolated) = 0.138 W/kg
SAR(1 g) = 0.105 mW/g; SAR(10 g) = 0.078 mW/g
Info: Interpolated medium parameters used for SAR evaluation!
Maximum value of SAR (measured) = 0.121 mW/g

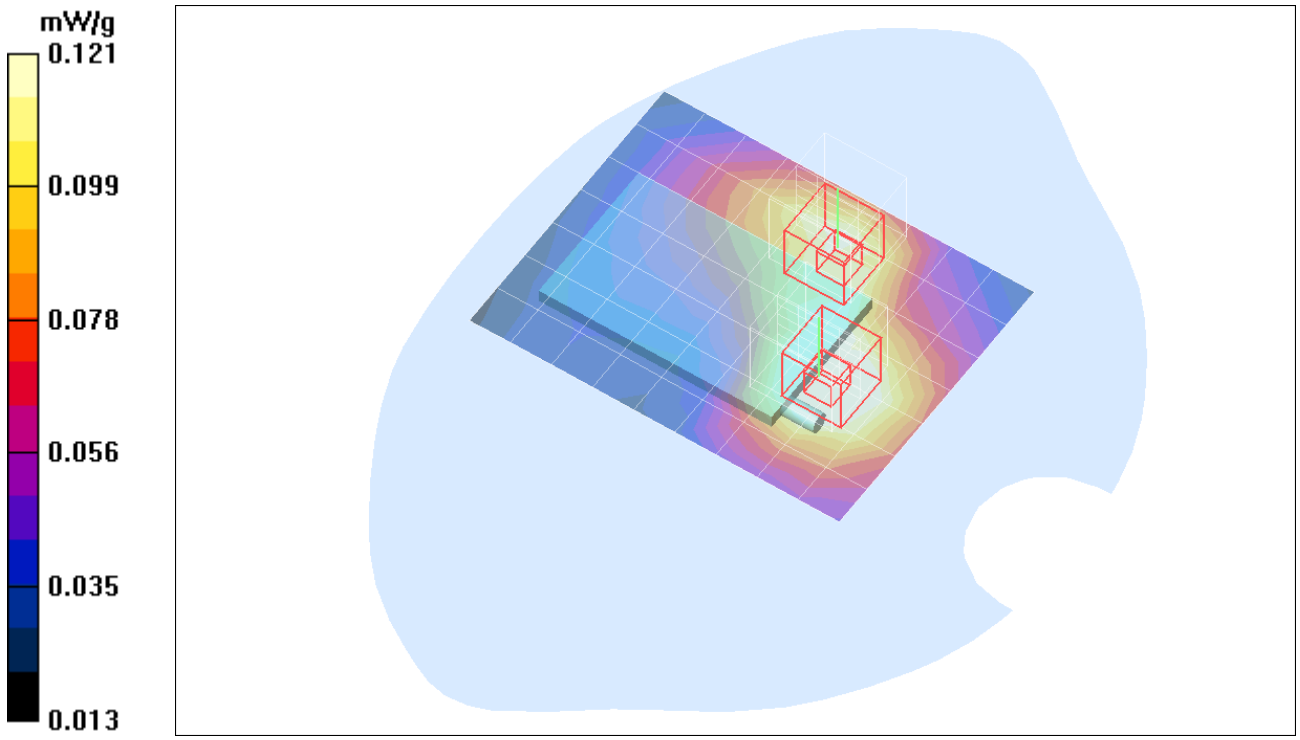

Date/Time: 9/6/2005 6:21:21 PM

Test Laboratory: Compliance Certification Services

3_Host # 3_Compaq ARMADA E500

DUT: Sierra Wireless; Type: AirCard 860; Serial: X1720158064E2

Communication System: GSM850; Frequency: 837 MHz;Duty Cycle: 1:4

GSM850 2Slot_M-ch/Z Scan (1x1x41): Measurement grid: dx=20mm, dy=20mm, dz=2.5mm
Info: Interpolated medium parameters used for SAR evaluation!
Maximum value of SAR (measured) = 0.139 mW/g

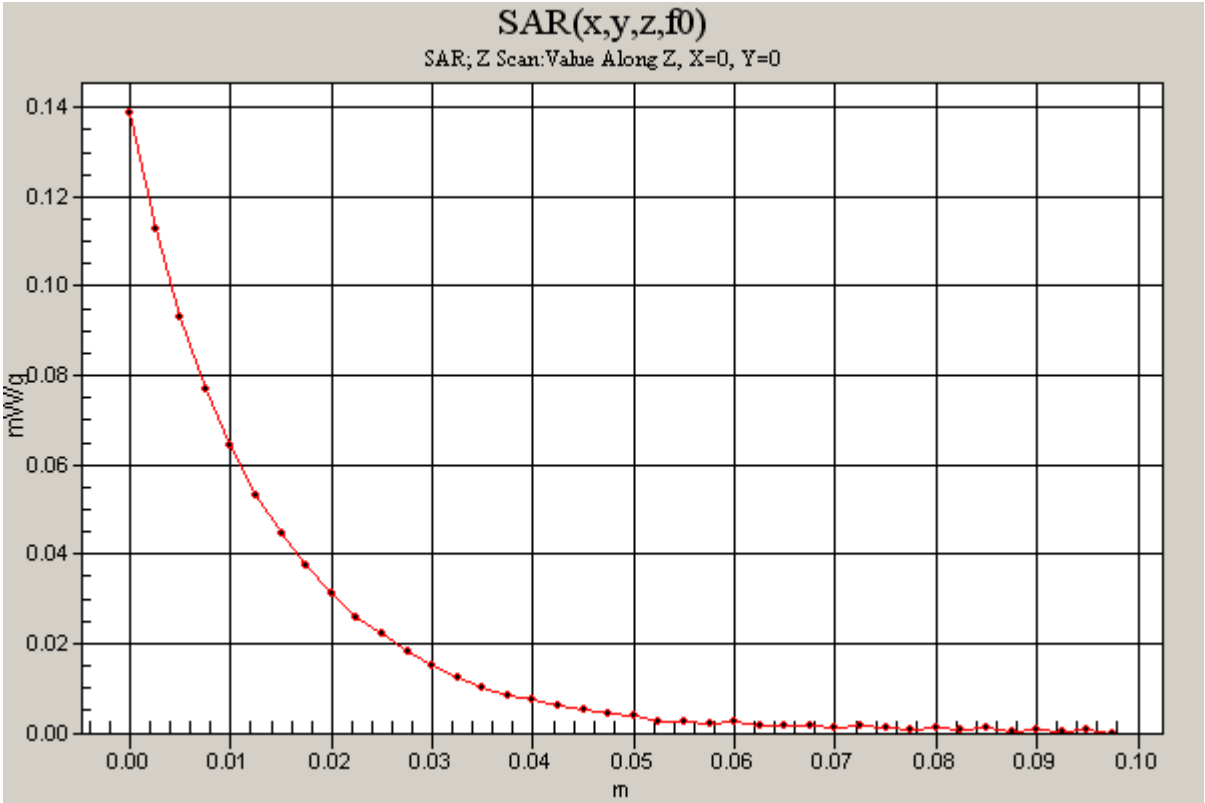

Test Laboratory: Compliance Certification Services

3_Host # 3_Compaq ARMADA E500

DUT: Sierra Wireless; Type: AirCard 860; Serial: X1720158064E2

Communication System: GSM850; Frequency: 837 MHz;Duty Cycle: 1:4
Medium parameters used (interpolated): f = 837 MHz; σ = 0.977 mho/m; ε_r = 54.4; ρ = 1000 kg/m^3
Phantom section: Flat Section

Room Ambient Temperature: 23.5 deg. C; Liquid Temperature: 23.0 deg. C

DASY4 Configuration:
- Area Scan setting - Find Secondary Maximum Within: 2.0 dB and with a peak SAR value greater than 0.0012W/kg
- Probe: EX3DV4 - SN3552 ; ConvF(9.72, 9.72, 9.72); Calibrated: 3/19/2005
- Sensor-Surface: 2.5mm (Mechanical Surface Detection)
- Electronics: DAE3 Sn500; Calibrated: 2/7/2005
- Phantom: SAM 2; Type: SAM 2; Serial: 1050
- Measurement SW: DASY4, V4.5 Build 19; Postprocessing SW: SEMCAD, V1.8 Build 146

EDGE850 2Slot_M-ch/Area Scan (10x8x1): Measurement grid: dx=15mm, dy=15mm
Maximum value of SAR (measured) = 0.044 mW/g

EDGE850 2Slot_M-ch/Zoom Scan (5x5x7)/Cube 0: Measurement grid: dx=7.5mm, dy=7.5mm, dz=5mm
Reference Value = 5.64 V/m; Power Drift = -0.051 dB
Peak SAR (extrapolated) = 0.054 W/kg
SAR(1 g) = 0.037 mW/g; SAR(10 g) = 0.025 mW/g
Info: Interpolated medium parameters used for SAR evaluation!
Maximum value of SAR (measured) = 0.043 mW/g

EDGE850 2Slot_M-ch/Zoom Scan (5x5x7)/Cube 1: Measurement grid: dx=7.5mm, dy=7.5mm, dz=5mm
Reference Value = 5.64 V/m; Power Drift = -0.051 dB
Peak SAR (extrapolated) = 0.043 W/kg
SAR(1 g) = 0.032 mW/g; SAR(10 g) = 0.024 mW/g
Info: Interpolated medium parameters used for SAR evaluation!
Maximum value of SAR (measured) = 0.037 mW/g

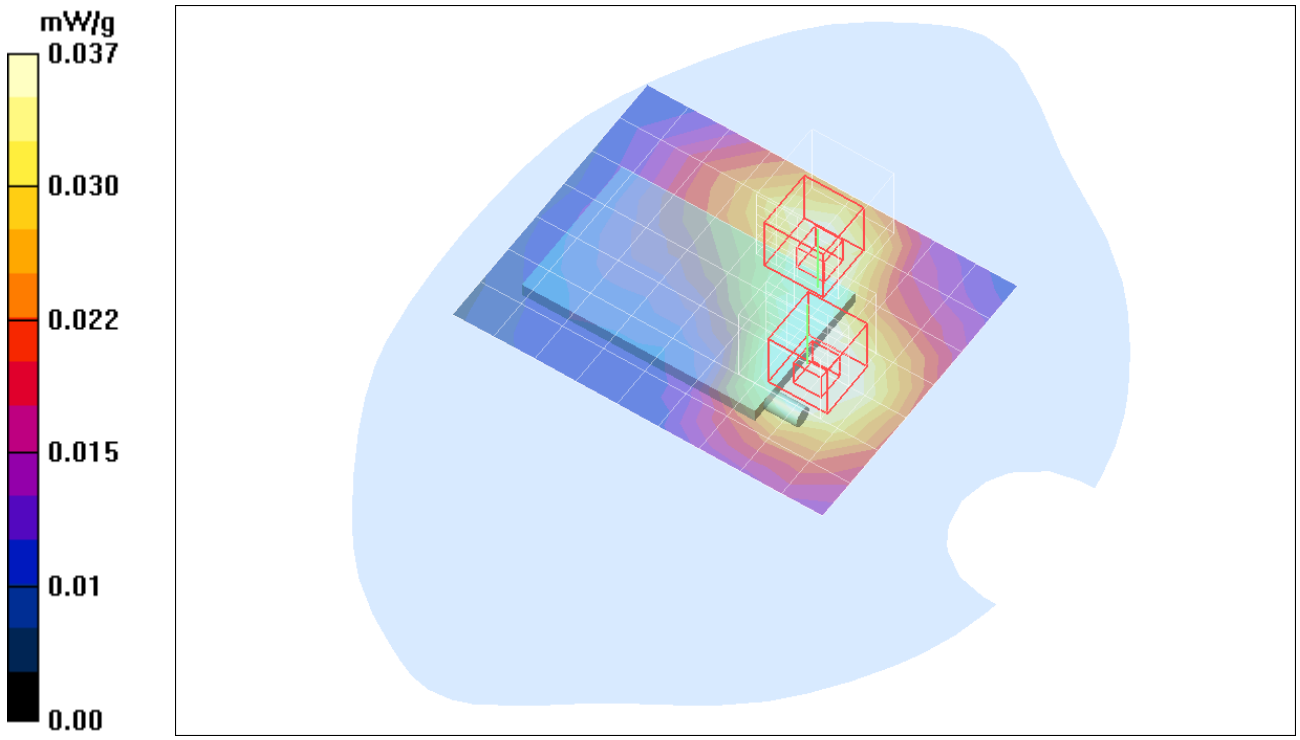

Test Laboratory: Compliance Certification Services

3_Host # 3_Compaq ARMADA E500

DUT: Sierra Wireless; Type: AirCard 860; Serial: X1720158064E2

Communication System: WCDMA; Frequency: 836.4 MHz;Duty Cycle: 1:1
Medium parameters used (interpolated): f = 836.4 MHz; σ = 0.976 mho/m; ε_r = 54.4; ρ = 1000 kg/m^3
Phantom section: Flat Section

Room Ambient Temperature: 23.5 deg. C; Liquid Temperature: 23.0 deg. C

DASY4 Configuration:
- Area Scan setting - Find Secondary Maximum Within: 2.0 dB and with a peak SAR value greater than 0.0012W/kg
- Probe: EX3DV4 - SN3552 ; ConvF(9.72, 9.72, 9.72); Calibrated: 3/19/2005
- Sensor-Surface: 2.5mm (Mechanical Surface Detection)
- Electronics: DAE3 Sn500; Calibrated: 2/7/2005
- Phantom: SAM 2; Type: SAM 2; Serial: 1050
- Measurement SW: DASY4, V4.5 Build 19; Postprocessing SW: SEMCAD, V1.8 Build 146

WCDMA850_M-ch 4182/Area Scan (10x8x1): Measurement grid: dx=15mm, dy=15mm

WCDMA850_M-ch 4182/Zoom Scan (5x5x7)/Cube 0: Measurement grid: dx=7.5mm, dy=7.5mm, dz=5mm

Reference Value = 8.22 V/m; Power Drift = -0.145 dB
Peak SAR (extrapolated) = 0.109 W/kg
SAR(1 g) = 0.074 mW/g; SAR(10 g) = 0.051 mW/g
Info: Interpolated medium parameters used for SAR evaluation!
Maximum value of SAR (measured) = 0.088 mW/g

WCDMA850_M-ch 4182/Zoom Scan (5x5x7)/Cube 1: Measurement grid: dx=7.5mm, dy=7.5mm, dz=5mm
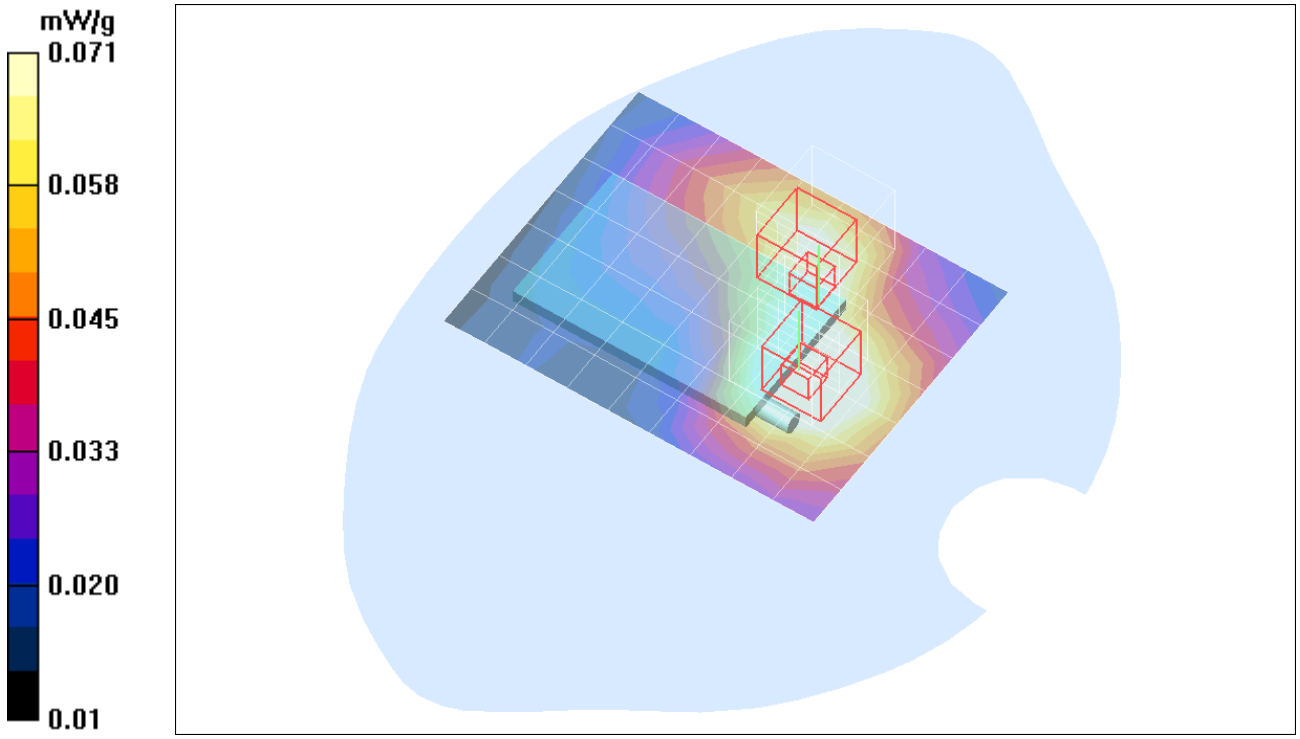
Reference Value = 8.22 V/m; Power Drift = -0.145 dB
Peak SAR (extrapolated) = 0.083 W/kg
SAR(1 g) = 0.061 mW/g; SAR(10 g) = 0.045 mW/g
Info: Interpolated medium parameters used for SAR evaluation!
Maximum value of SAR (measured) = 0.071 mW/g