AirPrime HL7800 and HL7800-M

Product Technical Specification

SIERRA WIRELESS®

41111094
1.7
August 10, 2018

Important Notice

Due to the nature of wireless communications, transmission and reception of data can never be guaranteed. Data may be delayed, corrupted (i.e., have errors) or be totally lost. Although significant delays or losses of data are rare when wireless devices such as the Sierra Wireless modem are used in a normal manner with a well-constructed network, the Sierra Wireless modem should not be used in situations where failure to transmit or receive data could result in damage of any kind to the user or any other party, including but not limited to personal injury, death, or loss of property. Sierra Wireless accepts no responsibility for damages of any kind resulting from delays or errors in data transmitted or received using the Sierra Wireless modem, or for failure of the Sierra Wireless modem to transmit or receive such data.

Safety and Hazards

Do not operate the Sierra Wireless modem in areas where cellular modems are not advised without proper device certifications. These areas include environments where cellular radio can interfere such as explosive atmospheres, medical equipment, or any other equipment which may be susceptible to any form of radio interference. The Sierra Wireless modem can transmit signals that could interfere with this equipment. Do not operate the Sierra Wireless modem in any aircraft, whether the aircraft is on the ground or in flight. In aircraft, the Sierra Wireless modem **MUST BE POWERED OFF**. When operating, the Sierra Wireless modem can transmit signals that could interfere with various onboard systems.

Note: *Some airlines may permit the use of cellular phones while the aircraft is on the ground and the door is open. Sierra Wireless modems may be used at this time.*

The driver or operator of any vehicle should not operate the Sierra Wireless modem while in control of a vehicle. Doing so will detract from the driver or operator's control and operation of that vehicle. In some states and provinces, operating such communications devices while in control of a vehicle is an offence.

Limitations of Liability

This manual is provided "as is". Sierra Wireless makes no warranties of any kind, either expressed or implied, including any implied warranties of merchantability, fitness for a particular purpose, or noninfringement. The recipient of the manual shall endorse all risks arising from its use.

The information in this manual is subject to change without notice and does not represent a commitment on the part of Sierra Wireless. SIERRA WIRELESS AND ITS AFFILIATES SPECIFICALLY DISCLAIM LIABILITY FOR ANY AND ALL DIRECT, INDIRECT, SPECIAL, GENERAL, INCIDENTAL, CONSEQUENTIAL, PUNITIVE OR EXEMPLARY DAMAGES INCLUDING, BUT NOT LIMITED TO, LOSS OF PROFITS OR REVENUE OR ANTICIPATED PROFITS OR REVENUE ARISING OUT OF THE USE OR INABILITY TO USE ANY SIERRA WIRELESS PRODUCT, EVEN IF SIERRA WIRELESS AND/OR ITS AFFILIATES HAS BEEN ADVISED OF THE POSSIBILITY OF SUCH DAMAGES OR THEY ARE FORESEEABLE OR FOR CLAIMS BY ANY THIRD PARTY.

Notwithstanding the foregoing, in no event shall Sierra Wireless and/or its affiliates aggregate liability arising under or in connection with the Sierra Wireless product, regardless of the number of events, occurrences, or claims giving rise to liability, be in excess of the price paid by the purchaser for the Sierra Wireless product.

Patents

This product may contain technology developed by or for Sierra Wireless Inc.

This product is manufactured or sold by Sierra Wireless Inc. or its affiliates under one or more patents licensed from MMP Portfolio Licensing.

Copyright

© 2018 Sierra Wireless. All rights reserved.

Trademarks

Sierra Wireless®, AirPrime®, AirLink®, AirVantage®, WISMO®, ALEOS® and the Sierra Wireless and Open AT logos are registered trademarks of Sierra Wireless, Inc. or one of its subsidiaries.

Watcher® is a registered trademark of NETGEAR, Inc., used under license.

Windows® and Windows Vista® are registered trademarks of Microsoft Corporation.

Macintosh® and Mac OS X® are registered trademarks of Apple Inc., registered in the U.S. and other countries.

QUALCOMM® is a registered trademark of QUALCOMM Incorporated. Used under license.

Other trademarks are the property of their respective owners.

Contact Information

Sales information and technical support, including warranty and returns	Web: sierrawireless.com/company/contact-us/ Global toll-free number: 1-877-687-7795 6:00 am to 5:00 pm PST
Corporate and product information	Web: sierrawireless.com

Document History

Version	Date	Updates
1.0	November 24, 2017	Creation
1.1	February 01, 2018	Added 3.3 Power Consumption States
		Updated: • Table 2 General Features • Table 5 Pin Definition • 3.2 Current Consumption • Table 11 Current Consumption Mode • 3.16 Debug Interface • 3.19.3 Rx Sensitivity
1.2	May 04, 2018	Added: • Table 9 Maximum Current Consumption
		Updated: • GNSS to GPS • 1.7 ESD Specifications • 1.8.5 RoHS Directive Compliance • 3.2 Current Consumption • Table 21 Digital I/O Electrical Characteristics • 3.11 Power On Signal (PWR_ON_N) • 3.19 RF Interface • 5 Reliability Specification
1.3	July 05, 2018	Added 1.8.3 ATEX Compliance
		Updated: • Table 1 Supported Bands/Connectivity • Table 2 General Features • 1.5 Interfaces • Table 5 Pin Definition • Table 9 Maximum Current Consumption • 3.2 Current Consumption • 3.3 Power Consumption States • 3.11 Power On Signal (PWR_ON_N) • 3.12 Reset Signal (RESET_IN_N) • Table 40 Typical Conducted RX Sensitivity
1.4	July 10, 2018	Updated Table 10 Low Current Consumption Mode
1.5	July 25, 2018	Added: • 1.8.2 Frequency Drift Correction • 6 Legal Information • HL7800-M
		Updated: • Table 9 Maximum Current Consumption • Moved Japan Approval to 6.1; updated Figure 16 Sample Japan Certification Indication
1.6	August 10, 2018	Updated: • 6.2 FCC Statement • 6.3 IC Statement

Contents

1. INTRODUCTION 10

1.1. Common Flexible Form Factor (CF^3) 11

1.2. Physical Dimensions 11

1.3. General Features 11

1.4. Architecture 13

1.5. Interfaces 14

1.6. Connection Interface 14

1.7. ESD Specifications 15

1.8. Environmental and Certifications 15

1.8.1. Environmental Specifications 15

1.8.2. Frequency Drift Correction 16

1.8.3. ATEX Compliance 16

1.8.4. Regulatory 16

1.8.5. RoHS Directive Compliance 16

1.8.6. Disposing of the Product 17

1.9. References 17

2. PAD DEFINITION 18

2.1. Pin Types 22

2.2. Pad Configuration (Top View, Through Module) 23

3. DETAILED INTERFACE SPECIFICATIONS 24

3.1. Power Supply 24

3.2. Current Consumption 25

3.3. Power Consumption States 26

3.3.1. 3GPP Power Saving Features 26

3.3.2. Power Modes 29

3.4. VGPIO 29

3.5. Real Time Clock (BAT_RTC) 30

3.6. USIM Interface 30

3.6.1. UIM1_DET 31

3.7. USB Interface 32

3.8. Electrical Information for Digital I/O 32

3.9. General Purpose Input/Output (GPIO) 33

3.10. Main Serial Link (UART1) 33

3.10.1. 8-wire Application 34

3.10.2. 4-wire Application (TBC) 35

3.10.3. 2-wire Application (TBC) 35

3.11. Power On Signal (PWR_ON_N) 35

3.11.1. Not Managed (Default) 36

3.11.2. Managed 37
3.12. Reset Signal (RESET_IN_N) 38
3.13. Analog to Digital Converter (ADC) 39
3.14. Clock Interface 39
3.15. PCM 40
3.16. Debug Interface 40
3.17. Wake Up Signal (WAKE_UP) 40
3.18. Fast Shutdown Signal (FAST_SHUTDOWN_N) 41
3.19. RF Interface 42
3.19.1. RF Connection 42
3.19.2. Maximum Output Power 42
3.19.3. Rx Sensitivity 42
3.19.4. TX Indicator (TX_ON) 43
3.20. GPS Interface 44
3.20.1. GPS Performance 44
3.20.2. GPS Antenna Indicator (EXT_LNA_GPS_EN) 44
4. MECHANICAL DRAWINGS 45
5. RELIABILITY SPECIFICATION 48
5.1. Preconditioning Test 48
5.2. Performance Test 48
5.3. Aging Tests 49
5.4. Characterization Tests 50
6. LEGAL INFORMATION 51
6.1. Japan Radio and Telecom Approval 51
6.2. FCC Statement 51
6.2.1. Radiation Exposure Statement 51
6.2.2. End Product Labeling 52
6.2.3. Manual Information to the End User 53
6.3. IC Statement 54
6.3.1. Radiation Exposure Statement / Déclaration d'Exposition aux Radiations 55
6.3.2. End Product Labeling / Plaque Signalétique du Produit Final 56
6.3.3. Manual Information to the End User / Manuel d'Information à l'Utilisateur Final 56
7. ORDERING INFORMATION 57
8. TERMS AND ABBREVIATIONS 58

List of Figures

Figure 1. Architecture Overview 13
Figure 2. Mechanical Overview (Top View) 14
Figure 3. Pad Configuration (Top View through Module) 23
Figure 4. PSM Example (Simplified) 26
Figure 5. eDRX Example (PTW=4) 28
Figure 6. 8-wire UART Application Example 34
Figure 7. 4-wire UART Application Example 35
Figure 8. 2-wire UART Application Example 35
Figure 9. Power Up and Power Down Sequence without PWR_ON_N 36
Figure 10. Power Up Sequence with PWR_ON_N Cold Start 37
Figure 11. Power On Sequence with PWR_ON_N 37
Figure 12. TX_ON State during TX Burst 43
Figure 13. Mechanical Drawing 45
Figure 14. Dimensions Drawing 46
Figure 15. Footprint Drawing 47
Figure 16. Sample Japan Certification Indication 51

List of Tables

Table 1. Supported Bands/Connectivity 10
Table 2. General Features 11
Table 3. Environmental Specifications 15
Table 4. Values for ATEX Compliance 16
Table 5. Pin Definition 18
Table 6. Pin Type Codes 22
Table 7. Power Supply Pin Description 24
Table 8. Power Supply Electrical Characteristics 24
Table 9. Maximum Current Consumption 24
Table 10. Low Current Consumption Mode 25
Table 11. Current Consumption Mode 26
Table 12. eDRX-Related Commands 28
Table 13. Low Power Modes 29
Table 14. VGPIO Pin Description 30
Table 15. VGPIO Electrical Characteristics 30
Table 16. BAT_RTC Electrical Characteristics 30
Table 17. USIM1 Pin Description 31
Table 18. USIM1 Electrical Characteristics 31
Table 19. USB Pin Description 32
Table 20. USB Electrical Characteristics 32
Table 21. Digital I/O Electrical Characteristics 32
Table 22. GPIO Pin Description 33
Table 23. UART1 Pin Description 34
Table 24. PWR_ON_N Pin Description 36
Table 25. PWR_ON_N Electrical Characteristics 36
Table 26. PWR_ON_N Not Managed Timing 36
Table 27. PWR_ON_N Managed Timing 38
Table 28. RESET_IN_N Pin Description 38
Table 29. RESET_IN_N Electrical Characteristics 38
Table 30. ADC Pin Description 39
Table 31. ADC Electrical Characteristics 39
Table 32. Clock Interface Pin Description 40
Table 33. Debug Pin Description 40
Table 34. WAKE_UP Pin Description 40
Table 35. WAKE_UP Electrical Characteristics 41
Table 36. FAST_SHUTDOWN_N Pin Description 41
Table 37. FAST_SHUTDOWN_N Electrical Characteristics 41

Table 38. RF Main Pin Description....42
Table 39. Maximum Output Power....42
Table 40. Typical Conducted RX Sensitivity....42
Table 41. TX_ON Pin Description....43
Table 42. TX_ON Characteristics....44
Table 43. GPS Antenna Specifications....44
Table 44. GPS Performance....44
Table 45. Preconditioning Test....48
Table 46. Performance Test....48
Table 47. Aging Tests....49
Table 48. Characterization Tests....50
Table 49. Ordering Information....57

1. Introduction

This document is the Product Technical Specification for the AirPrime HL7800 and HL7800-M Embedded Modules designed for M2M and Internet of Things (IoT) markets. It defines the high-level product features and illustrates the interfaces for these features. This document is intended to cover the hardware aspects of the product, including electrical and mechanical.

The AirPrime HL7800 and HL7800-M modules belongs to the AirPrime HL Series from Essential Connectivity Module family. These are industrial grade Embedded Wireless Modules that provides data connectivity on LTE (as listed in Table 1 Supported Bands/Connectivity).

The AirPrime HL7800 and HL7800-M modules supports a large variety of interfaces such as USB FS, UART, ADC, and GPIOs to provide customers with the highest level of flexibility in implementing high-end solutions.

Table 1. Supported Bands/Connectivity

LTE Band	Transmit Band (Tx)		Receive Band (Rx)		Cat-M1 (HL7800 and HL7800-M)	Cat-NB1 (HL7800 only)
	Minimum	Maximum	Minimum	Maximum		
B1	1920 MHz	1980 MHz	2110 MHz	2170 MHz	✓	✓
B2	1850 MHz	1910 MHz	1930 MHz	1990 MHz	✓	✓
B3	1710 MHz	1785 MHz	1805 MHz	1880 MHz	✓	✓
B4	1710 MHz	1755 MHz	2110 MHz	2155 MHz	✓	*
B5	824 MHz	849 MHz	869 MHz	894 MHz	✓	✓
B8	880 MHz	915 MHz	925 MHz	960 MHz	✓	✓
B9	1749.9 MHz	1784.9 MHz	1844.9 MHz	1879.9 MHz	*	*
B10	1710 MHz	1770 MHz	2110 MHz	2170 MHz	*	*
B12	699 MHz	716 MHz	729 MHz	746 MHz	✓	✓
B13	777 MHz	787 MHz	746 MHz	756 MHz	✓	✓
B14	788 MHz	798 MHz	758 MHz	768 MHz	✓	*
B17	704 MHz	716 MHz	734 MHz	746 MHz	*	✓
B18	815 MHz	830 MHz	860 MHz	875 MHz	✓	✓
B19	830 MHz	845 MHz	875 MHz	890 MHz	✓	✓
B20	832 MHz	862 MHz	791 MHz	821 MHz	✓	✓
B25	1850 MHz	1915 MHz	1930 MHz	1995 MHz	✓	✓
B26	814 MHz	849 MHz	859 MHz	894 MHz	✓	✓
B27	807 MHz	824 MHz	852 MHz	869 MHz	✓	*
B28	703 MHz	748 MHz	758 MHz	803 MHz	✓	✓
B66	1710 MHz	1780 MHz	2110 MHz	2200 MHz	✓	✓

* Will be supported in a future release.

Note: RF bands supported are configurable through AT command. The software-based radio allows for the ability to support extra bands for worldwide connectivity.

1.1. Common Flexible Form Factor (CF^3)

The AirPrime HL7800 and HL7800-M modules belong to the Common Flexible Form Factor (CF^3) family of modules. This family consists of a series of WWAN modules that share the same mechanical dimensions (same width and length with varying thicknesses) and footprint. The CF^3 form factor provides a unique solution to a series of problems faced commonly in the WWAN module space as it:

- Accommodates multiple radio technologies (LTE advanced) and band groupings.
- Supports bit-pipe (Essential Module Series) and value add (Smart Module Series) solutions.
- Offers electrical and functional compatibility.
- Provides Direct Mount as well as Socketability depending on customer needs.

1.2. Physical Dimensions

AirPrime HL7800 and HL7800-M modules are compact, robust, fully shielded modules with the following dimensions:

- Length: 18.0 mm
- Width: 15.0 mm
- Thickness: 2.4 mm
- Weight: 1.17 g

Note: Dimensions specified above are typical values.

1.3. General Features

The table below summarizes the AirPrime HL7800 and HL7800-M's features.

Table 2. General Features

Feature	Description
Physical	• Small form factor (86-pad solderable LGA pad) – 15.0mm x 18.0mm x 2.4mm (nominal) • Metal shield can • RF connection pads (RF main and RF GPS) • Baseband signals connection
Power supply	Single or double supply voltage (VBATT and VBATT_PA) – 3.2V – 4.35V

Feature	Description
RF	• Cat-M1 ▪ Power Class 3 (23dBm) ▪ Software based radio allowing support of extra bands for worldwide operation (will be supported in a future release) • Cat-NB1 (not supported on the HL7800-M) ▪ Power Class 3 (23dBm) ▪ Software based radio allowing support of extra bands for worldwide operation (will be supported in a future release) • GPS* ▪ 1575.42 MHz *Note: The GPS receiver shares the same RF resources as the 4G receiver. The end-device target should allow GPS positioning for asset management applications where infrequent and no real-time position updates are required.*
SIM interface	• 1.8V only support (3V SIM is not supported) • SIM extraction / hot plug detection • SIM/USIM support • Conforms with ETSI UICC Specifications. • Supports SIM application tool kit with proactive SIM commands
Application interface	• AT command interface – 3GPP 27.007 standard, plus proprietary extended AT commands • CMUX multiplexing over UART • USB FS*
Protocol stack	• Cat-M1 ▪ 3GPP Rel. 13 ▪ Half-duplex ▪ Channel bandwidth 1.4MHz ▪ LTE carrier bandwidth 1.4 / 3 / 5 / 10 / 15 / 20 MHz ▪ Up to 375kbit/s uplink, 300 kbit/s downlink ▪ Extended Coverage Mode A ▪ PSM (Power Save Mode) ▪ I-DRX ▪ C-DRX ▪ Idle mode mobility ▪ Connected mode mobility ▪ eDRX (Extended Discontinuous Reception) ▪ CiOT optimizations (U-Plane, C-Plan)* • Cat-NB1* (not supported on the HL7800-M) ▪ 3GPP Rel. 13 ▪ Half-duplex ▪ Channel bandwidth 180KHz ▪ LTE carrier bandwidth 1.4 / 3 / 5 / 10 / 15 / 20 MHz ▪ Up to 100 kbit/s in downlink ▪ Operational mode – Inband, Guard band, Standalone ▪ CioT EPS optimizations (Data over NAS) ▪ Extended coverage
Protocol stack	• Flexible selection ▪ Manual system selection across RATs ▪ Dynamic system selection across RATs (preferred RAT)*

Feature	Description
SMS	• SMS over SG • MO/MT • SMS storage to SIM card or ME storage
Connectivity	• Multiple cellular packet data profiles • Sleep mode for minimum idle power draw • Mobile-originated PDP context activation / deactivation • Static and Dynamic IP address. The network may assign a fixed IP address or dynamically assign one using DHCP (Dynamic Host Configuration Protocol). • PDP context type (IPv4, IPv6, IPv4v6). IP Packet Data Protocol context • RFC1144 TCP/IP header compression
Environmental	Operating temperature ranges (industrial grade): • Class A: -30°C to +70°C • Class B: -40°C to +85°C
RTC	Real Time Clock (RTC)

* Will be available in a future release.

1.4. Architecture

The figure below presents an overview of the AirPrime HL7800 and HL7800-M's internal architecture and external interfaces.

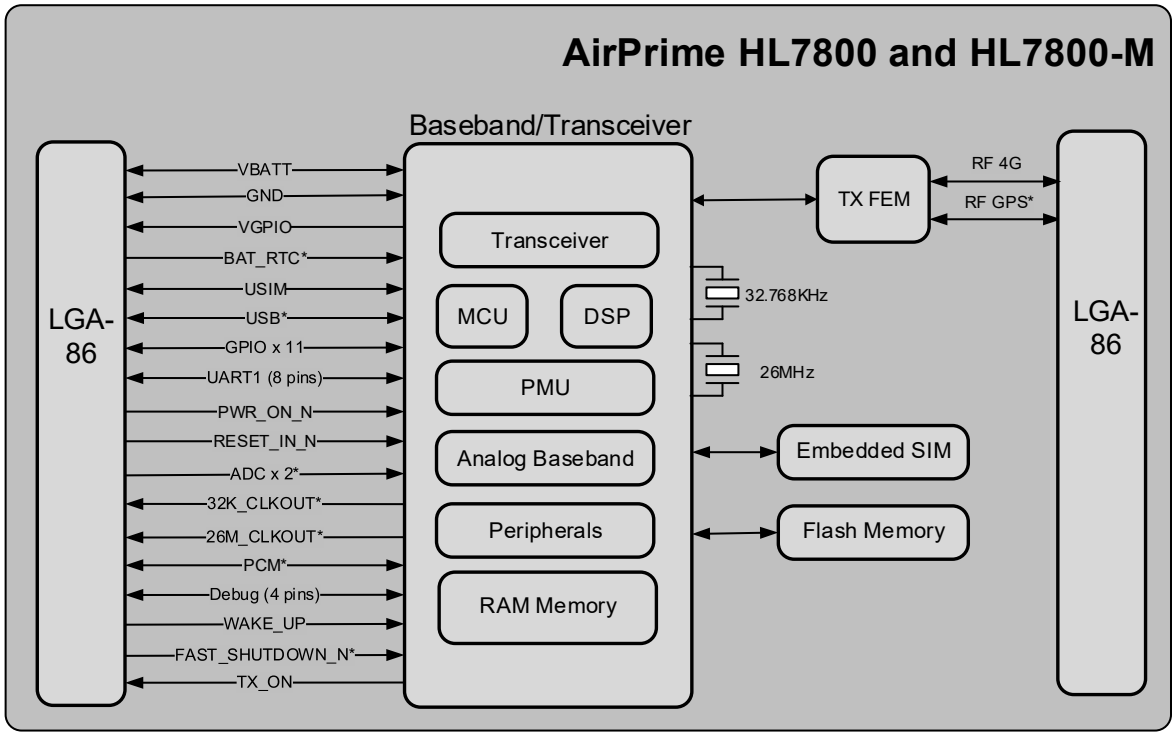

*** Will be available in a future release**

Figure 1. Architecture Overview

1.5. Interfaces

The AirPrime HL7800 and HL7800-M modules provide the following interfaces and peripheral connectivity:

- 1x – VGPIO (1.8V)
- 1x – BAT_RTC backup battery interface (will be available in a future release)
- 1x – 1.8V USIM
- 1x – USB FS (will be available in a future release)
- 11x – GPIOs
- 1x – 8-wire UART
- 1x – Active Low POWER ON (will be available in a future release)
- 1x – Active Low RESET
- 2x – ADC (will be available in a future release)
- 2x – System clock out (32.768 KHz and 26 MHz) (will be available in a future release)
- 1x – PCM (will be available in a future release)
- 1x – 4-wire UART for debug interface only
- 1x – Wake up signal
- 1x – Fast shutdown signal (will be available in a future release)
- 1x – Main RF Antenna
- 1x – TX indicator
- 1x – GPS Antenna (will be available in a future release)

1.6. Connection Interface

AirPrime HL7800 and HL7800-M modules are LGA form factor devices. All electrical and mechanical connections are made through the 86 Land Grid Array (LGA) pads on the bottom side of the PCB.

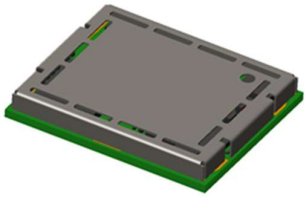

Figure 2. Mechanical Overview (Top View)

The 86 pads have the following distribution:

- 66 inner signal pads, 1x0.5mm, pitch 0.8mm
- 16 inner ground pads, 1.0x1.0mm, pitch 1.825mm/1.475mm
- 4 outer corner ground pads, 0.85x0.97mm

1.7. ESD Specifications

- IEC-61000-4-2 (test carried out on test vehicle including ESD protection)
  - Contact Voltage: ±2kV, ±4kV, ±6kV (design target)
  - Air Voltage: ±2kV, ±4kV, ±8kV (design target)
- Unless otherwise specified:
  - JESD22-A114 ± 250kV Human Body Model
  - JESD22-C101C ± 250V Charged Device Model

1.8. Environmental and Certifications

1.8.1. Environmental Specifications

The environmental specification for both operating and storage conditions are defined in the table below.

Table 3. Environmental Specifications

Conditions	Range
Operating Class A	-30°C to +70°C
Operating Class B	-40°C to +85°C
Storage	-40°C to +85°C

Class A is defined as the operating temperature ranges that the device:

- Shall exhibit normal function during and after environmental exposure.
- Shall meet the minimum requirements of 3GPP or appropriate wireless standards.

Class B is defined as the operating temperature ranges that the device:

- Shall remain fully functional during and after environmental exposure
- Shall exhibit the ability to establish an SMS or DATA call (emergency call) at all times even when one or more environmental constraint exceeds the specified tolerance.
- Unless otherwise stated, full performance should return to normal after the excessive constraint(s) have been removed.

1.8.2. Frequency Drift Correction

The HL7800 and HL7800-M are environmental sensitive and able to correct temperature and aging effects automatically. Parameters to be considered when addressing the environmental effect on the HL7800 and HL7800-M are as follows:

- Maximum deviation correction: 20 ppm
- Environmental Temperature effect: 0.5 ppm
- Factory reflow effect: 1 ppm + 1 ppm / reflow
- Aging effect: 1 ppm /year of use

For example, if an HL7800 module is mounted on a single side (1 reflow) customer PCB and used for 10 years between -40 and +85°C, the frequency drift will be up to 0.5 + (1 + 1) + (1 * 10) = 12.5 ppm, which is in the limits of the 20 ppm maximum correction.

1.8.3. ATEX Compliance

The following table lists the inductor and capacitor values to be considered for ATEX certification of the system hosting the HL7800 and HL7800-M modules. All supplies in the modules are linear LDO except for one 1.3V DC/DC step-down.

Table 4. Values for ATEX Compliance

Parameter	Value	Tolerance
Total Inductance	2.21 µH	30%
Total Capacitance	43.64 µF	20 %

1.8.4. Regulatory

The AirPrime HL7800 and HL7800-M modules will be compliant with the following regulations:

- RED
- FCC
- IC
- RCM
- JRF/JPA

1.8.5. RoHS Directive Compliance

AirPrime HL7800 and HL7800-M modules are compliant with RoHS Directive 2011/65/EU, including directive 2015/863 amending annex II, which sets limits for the use of certain restricted hazardous substances. This directive states that electrical and electronic equipment put on the market does not contain lead, mercury, cadmium, hexavalent chromium, polybrominated biphenyls (PBB), polybrominated diphenyl ethers (PBDE), Bis (2-ethylhexyl) phthalate (DEHP), Butyl benzyl phthalate (BBP), Dibutyl phthalate (DBP) or Diisobutyl phthalate (DIBP) above threshold limits.

1.8.6. Disposing of the Product

This electronic product is subject to the EU Directive 2012/19/EU for Waste Electrical and Electronic Equipment (WEEE). As such, this product must not be disposed of at a municipal waste collection point. Please refer to local regulations for directions on how to dispose of this product in an environmental friendly manner.

1.9. References

[1] AirPrime HL78xx Customer Process Guidelines
Reference Number: 41112095

[2] AirPrime HL78xx AT Commands Interface Guide
Reference Number: 41111821

[3] AirPrime HL Series Development Kit User Guide
Reference Number: 4114877

[4] AirPrime HL7800 Low Power Modes Application Note
Reference Number: 41112578

2. Pad Definition

AirPrime HL7800 and HL7800-M pins are divided into 2 functional categories.

- **Core functions and associated pins** cover all the mandatory features for M2M connectivity and will be available by default across all CF[3] family of modules. These Core functions are always available and always at the same physical pad locations. A customer platform using only these functions and associated pads are guaranteed to be forward and/or backward compatible with the next generation of CF[3] modules.
- **Extension functions and associated pins** bring additional capabilities to the customer. Whenever an Extension function is available on a module, it is always at the same pad location.

Other pins marked as “not connected” or “reserved” should not be used.

Table 5. Pin Definition

Pad #	Signal Name	Function	I/O	Pre and Post Reset State*	Power Supply Domain	Recommendation for Unused Pads	Type
C1	GPIO1	General purpose input/output	I/O	PU	1.8V	Left Open	Extension
C2	UART1_RI	UART1 Ring indicator	O	PU	1.8V	Connect to test point	Core
C3	UART1_RTS	UART1 Request to send	I	PU	1.8V	Connect to test point	Core
C4	UART1_CTS	UART1 Clear to send	O	PU	1.8V	Connect to test point	Core
C5	UART1_TX	UART1 Transmit data	I	PU	1.8V	Connect to test point	Core
C6	UART1_RX	UART1 Receive data	O	PU	1.8V	Connect to test point	Core
C7	UART1_DTR	UART1 Data terminal ready	I	PU	1.8V	Connect to test point	Core
C8	UART1_DCD	UART1 Data carrier detect	O	PU	1.8V	Connect to test point	Core
C9	UART1_DSR	UART1 Data set ready	O	PU	1.8V	Connect to test point	Core
C10	GPIO2	General purpose input/output	I/O	PD	1.8V	Connect to test point	Core
C11	RESET_IN_N	Input reset signal	I		1.8V	Left Open	Core
C12	USB_D-	USB Data Negative (Full Speed)	I/O		3.3V	Connect to test point	Extension
C13	USB_D+	USB Data Positive (Full Speed)	I/O		3.3V	Connect to test point	Extension

Pad #	Signal Name	Function	I/O	Pre and Post Reset State*	Power Supply Domain	Recommendation for Unused Pads	Type
C14	NC	Not Connected				Left Open	Not connected
C15	NC	Not Connected				Left Open	Not connected
C16	USB_VBUS	USB VBUS	I		5V	Connect to test point	Extension
C17	NC	Not Connected				Left Open	Not connected
C18	NC	Not Connected				Left Open	Not connected
C19	NC	Not Connected				Left Open	Not Connected
C20	NC	Not Connected				Left Open	Not Connected
C21	BAT_RTC	Power supply for RTC backup	I			Left Open	Extension
C22	26M_CLKOUT	26M System Clock Output	O	PD	1.8V	Left Open	Extension
C23	32K_CLKOUT	32.768kHz System Clock Output	O	PU	1.8V	Left Open	Extension
C24	ADC1	Analog to digital converter	I		1.2V	Left Open	Extension
C25	ADC0	Analog to digital converter	I		1.2V	Left Open	Extension
C26	UIM1_VCC	1.8V USIM1 Power supply	O		1.8V	Mandatory connection	Core
C27	UIM1_CLK	1.8V USIM1 Clock	O		1.8V	Mandatory connection	Core
C28	UIM1_DATA	1.8V USIM1 Data	I/O		1.8V	Mandatory connection	Core
C29	UIM1_RESET	1.8V USIM1 Reset	O		1.8V	Mandatory connection	Core
C30	GND	Ground	0V		0V	Mandatory connection	Extension
C31	NC	Not Connected					Not connected
C32	GND	Ground	0V		0V	Mandatory connection	Extension
C33	PCM_OUT	PCM data out	O	PU	1.8V	Left Open	Extension
C34	PCM_IN	PCM data in	I	PU	1.8V	Left Open	Extension
C35	PCM_SYNC	PCM sync out	I/O	PU	1.8V	Left Open	Extension
C36	PCM_CLK	PCM clock	I/O	PD	1.8V	Left Open	Extension
C37	GND	Ground	0V		0V	Mandatory connection	Core
C38	RF_GPS	RF_GPS				Left Open	Core
C39	GND	Ground	0V		0V	Mandatory connection	Core
C40	GPIO7	General purpose input/output	I/O	PU	1.8V	Left Open	Core

Pad #	Signal Name	Function	I/O	Pre and Post Reset State*	Power Supply Domain	Recommendation for Unused Pads	Type
C41	GPIO8	General purpose input/output	I/O	PD	1.8V	Left Open	Core
C42	NC	Not Connected					Not connected
C43	EXT_LNA_GPS_EN	External GPS LNA enable		PU		Left Open	Extension
C44	WAKE_UP	Wake up signal	I	PD	1.8V	Mandatory connection	Extension
C45	VGPIO	GPIO voltage output	O		1.8V	Left Open	Core
C46	GPIO6	General purpose input/output	I/O	PD	1.8V	Left Open	Core
C47	NC	Not Connected				Left Open	Not connected
C48	GND	Ground	0V		0V	Mandatory connection	Core
C49	RF_MAIN	RF Input/output				Mandatory connection	Core
C50	GND	Ground	0V		0V	Mandatory connection	Core
C51	GPIO14	General purpose input/output	I/O	PU	1.8V	Left Open	Extension
C52	GPIO10	General purpose input/output	I/O	PU	1.8V	Left Open	Extension
C53	GPIO11	General purpose input/output	I/O	PU	1.8V	Left Open	Extension
C54	GPIO15	General purpose input/output	I/O	PU	1.8V	Left Open	Extension
C55	UART0_RX	Debug Receive data	O	PU	1.8V	Mandatory connection	Extension
C56	UART0_TX	Debug Transmit data	I	PU	1.8V	Mandatory connection	Extension
C57	UART0_CTS	Debug Clear to Send	O	PU	1.8V	Mandatory connection	Extension
C58	UART0_RTS	Debug Request to Send	I	PD	1.8V	Mandatory connection	Extension
C59	PWR_ON_N	Active Low Power On control signal	I		1.8V	Mandatory connection	Core
C60	TX_ON	TX transmission indication	O	PU	1.8V	Left Open	Extension
C61	VBATT_PA	Power supply (refer to section 3.1 Power Supply for more information)	I		3.2V (min) 3.7V (typ) 4.35V (max)	Mandatory connection	Core
C62	VBATT_PA	Power supply (refer to section 3.1 Power Supply for more information)	I		3.2V (min) 3.7V (typ) 4.35V (max)	Mandatory connection	Core

Pad #	Signal Name	Function	I/O	Pre and Post Reset State*	Power Supply Domain	Recommendation for Unused Pads	Type
C63	VBATT	Power supply (refer to section 3.1 Power Supply for more information)	I		3.2V (min) 3.7V (typ) 4.35V (max)	Mandatory connection	Core
C64	UIM1_DET / GPIO3	USIM1 Detection / General purpose input/output	I/O	PD	1.8V	Left Open	Core
C65	FAST_SHUTDOWN_N	Fast Shutdown signal	I	PU	1.8V	Left Open	Extension
C66	GPIO5	General purpose input/output	I/O	PU	1.8V	Left Open	Extension
CG1 – CG4, G1 – G16	GND	Ground	GND		0V		Core

* This refers to the state before and after RESET_IN_N; state is Undefined during reset. Refer to section 3.12 Reset Signal (RESET_IN_N) for more details.

2.1. Pin Types

Table 6. Pin Type Codes

Type	Definition
I	Digital Input
O	Digital Output
I/O	Digital Input / Output
L	Active High
H	Active Low
T	Tristate
T/PU	Tristate with pull-up enabled
T/PD	Tristate with pull-down enabled
PU	Pull-up enabled
PD	Pull-down enabled
N/A	Not Applicable

2.2. Pad Configuration (Top View, Through Module)

Note: The following diagram shows the pad configuration from DV2 onwards.

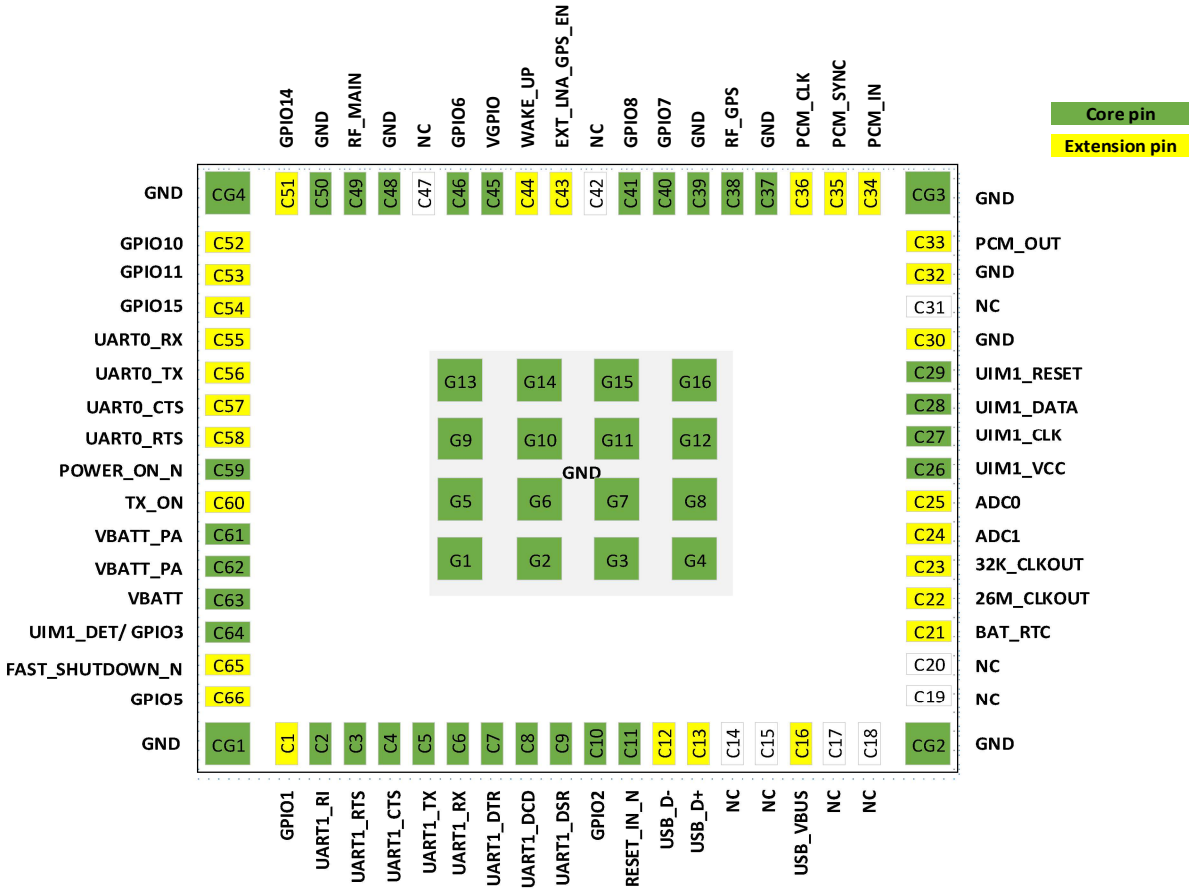

Figure 3. Pad Configuration (Top View through Module)

3. Detailed Interface Specifications

Note: If not specified, all electrical values are given for VBATT=3.7V and an operating temperature of 25°C.

For standard applications, VBATT and VBATT_PA must be tied externally to the same power supply. For some specific applications, AirPrime HL7800 and HL780-M modules support separate VBATT and VBATT_PA connection if requirements below are fulfilled.

3.1. Power Supply

The AirPrime HL7800 and HL7800-M modules are supplied through the VBATT and VBATT_PA signals.

Refer to the following table for the pin description of the Power Supply interface.

Table 7. Power Supply Pin Description

Pad Number	Signal Name	I/O	Description
C63	VBATT	I	Power supply (base band)
C61, C62	VBATT_PA	I	Power supply (radio frequency)
CG1 – CG4, G1 – G16	GND		Ground

Refer to the following table for the electrical characteristics of the Power Supply interface.

Table 8. Power Supply Electrical Characteristics

Supply	Minimum	Typical	Maximum
VBATT voltage (V)	3.2	3.7	4.35
VBATT_PA voltage (V) Full Specification	3.2	3.7	4.35
VBATT_PA voltage (V) Extended Range	2.8* (TBC)	3.7	4.35

* No guarantee of 3GPP performances over extended range.

Table 9. Maximum Current Consumption

Supply	Maximum
VBATT	500mA
VBATT_PA	500mA

Note: If a single PSU is used, the recommended power supply capability is 500 mA + 500 mA = 1A.

3.2. Current Consumption

The following tables list the current consumption of the AirPrime HL7800 and HL7800-M modules at different conditions.

Note: Typical values are defined for VBATT/VBATT_PA at 3.7V and 25°C, for 50Ω impedance at all RF ports. Maximum values are provided for VSWR2.5:1 (TBC) with worst conditions among supported ranges of voltages and temperature.

Table 10. Low Current Consumption Mode

Parameter	Typical	Unit
Off mode (module switched off & VBATs Connected)	3	µA
PSM Floor in Hibernate mode	3	µA
PSM 1h in Hibernate mode	70	µA
PSM 24h in Hibernate mode	6	µA
DRX 1.28 s in Sleep mode	3.4 1.8*	mA
DRX 2.56 s in Sleep mode	3.0 1.5*	mA
eDRX 20.48 s / PTW 1 in Hibernate mode	200** <100*	µA
eDRX 81.92 s / PTW 1 in Hibernate mode	100** <50*	µA

* Enhancement will be available in a future firmware version.

** Values are PTW and DRX dependent.

Refer to section 3.3.2 Power Modes for details regarding different low power modes.

The PSM 1h and 24h in Hibernate mode assume the following conditions:

- Cat-M1
- Good channel conditions without UICC / USIM current
- Static scenario, no repetitions
- Cycle includes boot, cell acquisition, network attachment, wait for timer expiry and back to sleep

The PSM Floor in Hibernate mode assumes the following conditions:

- I/Os are not held (VGPIO is off)
- Customer application is not allowed to drive the module's I/Os
- UICC / USIM is off
- The module only wakes up by a high level on the WAKE_UP pin

Table 11. Current Consumption Mode

Parameter	Band	Output Power	Average Current (Typical Values)	Unit
LTE connected mode Cat-M1	1, 2, 3, 4, 66	23dBm	220 (TBC)	mA
		0dBm	110 (TBC)	mA
LTE connected mode Cat-M1	5, 8, 12, 13, 14, 18, 19, 20, 26, 28	23dBm	220 (TBC)	mA
		0dBm	110 (TBC)	mA
LTE connected mode Cat-NB1	1, 3	23dBm	220 (TBC)	mA
		0dBm	110 (TBC)	mA
LTE connected mode Cat-NB1	5, 8, 20, 28	23dBm	220 (TBC)	mA
		0dBm	110 (TBC)	mA

3.3. Power Consumption States

3.3.1. 3GPP Power Saving Features

3.3.1.1. Power Saving Mode (PSM)

Power Saving Mode (PSM) is a 3GPP feature that allows the HL7800 and HL7800-M to minimize power consumption by registering on a PSM-supporting LTE network, entering PSM (a very low power ‘dormant’ state) for a pre-configured duration (via a TAU (Tracking Area Update) timer), and then waking for a short period to transmit or receive data before re-entering PSM. During the dormant period, the module remains unreachable by the network until woken by the TAU timer or WAKE_UP pin.

While the HL7800 or HL7800-M is in PSM:

- Power consumption is significantly reduced with longer dormant periods
- Networking layer signaling overhead is reduced
- Radio resource signaling is reduced

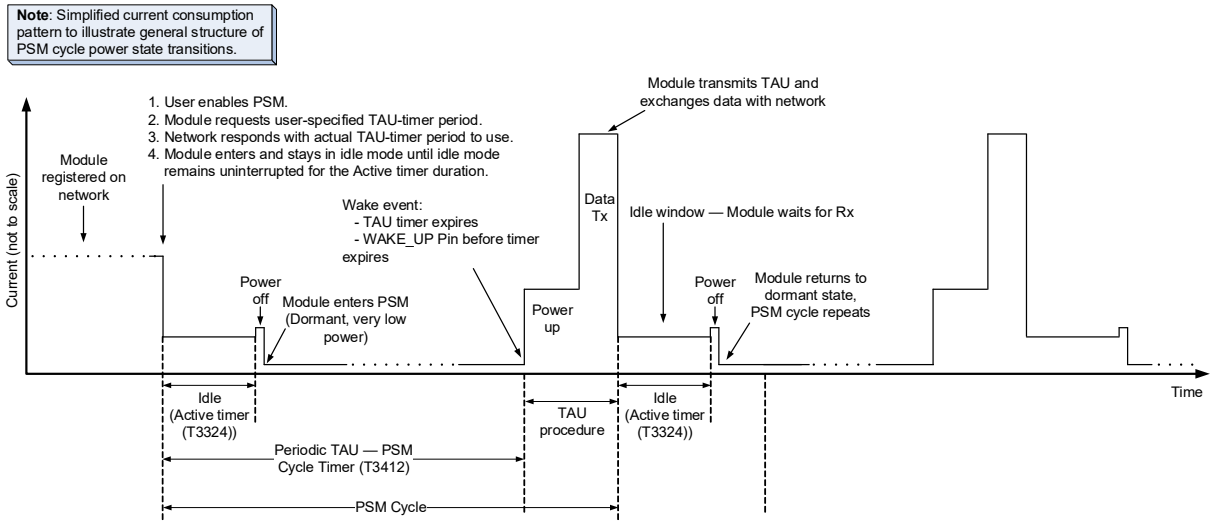

Figure 4. PSM Example (Simplified)

Typical candidates for PSM are systems (such as monitors and sensors) that:

- Require long battery life (low power consumption)
- Tolerate very long latency for mobile-terminated SMS/data
- Do not use mobile-terminated voice
- Send and/or receive data infrequently and periodically (e.g. on a given schedule of once every few hours, days, weeks, etc.)

The following example describes how the module uses PSM (as shown in Figure 4 PSM Example (Simplified)):

1. Module registers on an LTE network.
2. User enables PSM via **+CPSMS**, specifying the desired TAU timer and Active timer periods.
3. Module submits the PSM request (including desired TAU timer) to the network.
4. Network responds and indicates whether PSM is supported and (if it is) indicates the actual TAU timer to use.
5. If the network supports PSM:
   a. Module enters idle mode (waiting for Rx from network).
   b. When module has remained idle for the Active timer period, module powers off (except for maintaining timer and interrupts) and enters PSM.
   c. Module remains in PSM for the specified TAU timer period or until the WAKEUP pin wakes it.
   d. Module powers up, then transmits TAU and exchanges data with network.
   e. Module enters idle mode and cycle repeats.

Note that:

- The PSM Periodic-TAU timer and Active Time values must be carefully selected to match the intended use case(s) for the module:
  - Periodic TAU PSM Cycle timer (T3412) – Note that while the module is dormant (for the duration of this timer, unless woken by the WAKE_UP pin, it will be completely unreachable by the network.
  - Active Time (Idle mode time after transmission (T3324)) – Make sure to set the Active timer high enough to provide appropriate delay-tolerance for mobile-terminated/network-originated transmissions to be received.
- When using multiple devices, consider scheduling the modules to wake at different times so that the network does not get flooded by all modules waking and transmitting simultaneously.

3.3.1.2. Extended DRX (eDRX)

The HL7800 and HL7800-M support eDRX, which is a “flexible sleep” active mode that allows for longer sleep duration ($T_{I\text{-}eDRX}$) and a significant decrease in power consumption compared to regular DRX. The eDRX feature allows the module to not monitor every Paging Occasion (PO), but only the POs that belong to the Paging Transmission Window (PTW) as described in the figure below.

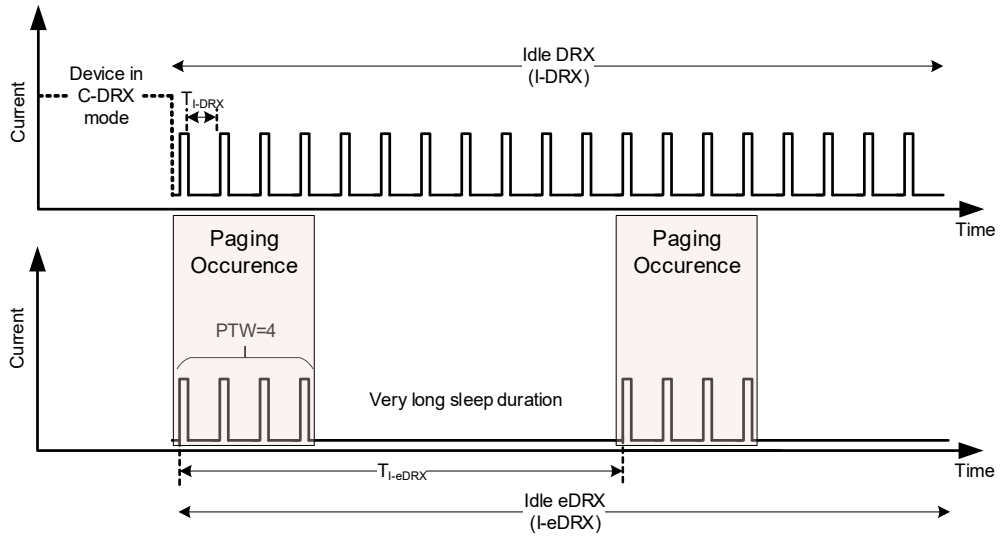

Figure 5. eDRX Example (PTW=4)

The following table describes available methods for configuring eDRX.

Table 12. eDRX-Related Commands

AT Command	Description
AT+CEDRXS	Enable/disable eDRX and configure related settings
AT+CEDRXRDP	Display current eDRX settings

For example:

- Use the **AT+CEDRXS** command to configure the desired $T_{I\text{-}eDRX}$ value.
- During the network attachment or TAU process:
  - eDRX request and settings are sent to the network.
  - Network responds and indicates whether eDRX is supported for the connection and may adjust the eDRX parameters.
- If eDRX is supported by the network, the module only listens to paging during paging occurrence and may enter low power mode between paging occurrence.

Note that:

- Sleep duration must be carefully selected to match the intended use case(s) for the module. While the module is asleep, it will be unreachable by the network. The duration should provide appropriate delay-tolerance for mobile-terminated/network-originated transmissions to be received.
- Network-side store and forward is supported – Packets will be stored until the module is reachable.

3.3.2. Power Modes

Three low power modes are supported on the AirPrime HL7800 and HL7800-M modules:

- Sleep Mode: 26Mhz system clock is OFF, all memories and I/O states are retained. The module can wake-up via the WAKE_UP signal or UART1_DTR.
- Lite Hibernate mode: RTC, I/O states and a part of the RAM are ON (RAM is only used for 4G protocol state and data). The module can only wake-up via the WAKE_UP signal.
- Hibernate mode: RTC and optionally part of the RAM (depending on the 4G modem state) are ON. The module can only wake-up only via the WAKE_UP signal.

These modes can be configured using the **+KSLEEP** AT command.

Note that:

- When the module exits from Lite Hibernate or Hibernate mode, the host processor will act as after a module reset (all non-persistent configurations are lost).
- Sleep mode is recommended for regular DRX mode.
- Hibernate mode is recommended when the module is configured in PSM or eDRX mode.

The table below summarizes these low power modes.

Table 13. Low Power Modes

Power Mode	Possible Modem State	I/O State	Hardware Wake-Up Signal Source	Application Data
Sleep	Stack OFF, DRX, eDRX, PSM, No service	Retained	UART_DTR WAKE-UP	Retained
Lite Hibernate	Stack OFF, eDRX, PSM, No service	Retained	UART_DTR WAKE-UP	Not retained
Hibernate	Stack OFF, eDRX, PSM, No service	Not retained	WAKE-UP	Not retained

Refer to document [4] AirPrime HL7800 Low Power Modes Application Note for additional details.

3.4. VGPIO

The VGPIO output can be used to:

- Pull-up signals such as I/Os.
- Supply the digital transistors driving LEDs.

The VGPIO output is available when the AirPrime HL7800 or HL7800-M module is switched ON. (This output is not available in low power mode.)

Refer to the following table for the pin description of the VGPIO interface.

Table 14. VGPIO Pin Description

Pad Number	Signal Name	I/O	Description
C45	VGPIO	O	GPIO voltage output

Refer to the following table for the electrical characteristics of the VGPIO interface.

Table 15. VGPIO Electrical Characteristics

Parameter	Minimum	Typical	Maximum	Remarks
Voltage level (V)	1.7	1.8	1.9	Both active mode and sleep mode
Current capability Active Mode (mA)	-	-	50	
Current capability Sleep Mode (mA)	-	-	1	
Rise Time (ms)	-	-	TBD	Start-Up time from 0V

3.5. Real Time Clock (BAT_RTC)

The AirPrime HL7800 and HL7800-M modules provide an input to connect a Real Time Clock power supply.

This pin is used as a back-up power supply for the internal Real Time Clock. The RTC is supported when VBATT is available but a back-up power supply is needed to save date and hour when VBATT is switched off.

This pin is input only and is not capable of charging a backup capacitor.

Table 16. BAT_RTC Electrical Characteristics

Parameter	Minimum	Typical	Maximum	Unit
Input voltage	2.2	-	4.35	V
Input current consumption	-	1 (TBC)	-	µA

3.6. USIM Interface

The AirPrime HL7800 and HL7800-M modules have one physical USIM interface, USIM1, and an optional internal USIM or eUICC.

The USIM1 interface allows control of an only 1.8V USIM and is fully compliant with GSM 11.11 recommendations concerning USIM functions.

The five signals used by this interface UIM1 are as follows:

- UIM1_VCC: Power supply
- UIM1_CLK: Clock
- UIM1_DATA: I/O port
- UIM1_RESET: Reset
- UIM1_DET/GPIO3: Hardware SIM detection

Refer to the following table for the pad description of the USIM1 interface.

Table 17. USIM1 Pin Description

Pad Number	Signal Name	Description	Multiplex
C26	UIM1_VCC	1.8V USIM1 Power supply	
C27	UIM1_CLK	1.8V USIM1 Clock	
C28	UIM1_DATA	1.8V USIM1 Data	
C29	UIM1_RESET	1.8V USIM1 Reset	
C64	UIM1_DET	1.8V USIM1 Detection	GPIO3

Refer to the following table for the electrical characteristics of the USIM1 interface.

Table 18. USIM1 Electrical Characteristics

Parameter	Minimum	Typical	Maximum	Remarks
UIM1 Interface Voltage (V) (VCC, CLK, I/O, RESET)	-	1.80	-	The appropriate output voltage is auto detected and selected by software.
UIM1 Detect	-	1.80	-	High active
UIM1_VCC Current (mA)	-	-	50	Max output current in sleep mode = 3 mA
UIM1_VCC Line Regulation (mV/V)	-	-	TBD	At Iout_Max
UIM1_VCC Power-up Setting Time (µs) from power down	-	10	-	

3.6.1. UIM1_DET

Note: This interface will be available in a future release.

UIM1_DET is used to detect and notify the application about the insertion and removal of a USIM device in the USIM socket connected to the main USIM interface (UIM1). When a USIM is inserted, the state of UIM1_DET transitions from logic 0 to logic 1. Inversely, when a USIM is removed, the state of UIM1_DET transitions from logic 1 to logic 0.

Enabling or disabling this USIM detect feature can be done using the **`AT+KSIMDET`** command. For more information about this command, refer to document [2] AirPrime HL78xx AT Commands Interface Guide. (Note that this command is not yet available.)

3.7. USB Interface

Note: This interface will be available in a future release.

The AirPrime HL7800 and HL7800-M modules have one Universal Serial Bus Interface Full Speed. Refer to the following table for the pad description of the USB interface.

Table 19. USB Pin Description

Pad Number	Signal Name	I/O	Function
C12	USB_D-	I/O	USB Data Negative
C13	USB_D+	I/O	USB Data Positive
C16	USB_VBUS	I	USB VBUS

Refer to the following table for the electrical characteristics of the USB interface.

Table 20. USB Electrical Characteristics

Parameter	Minimum	Typical	Maximum	Unit
Input voltage at pins USB_D+ / USB_D-	3.15	3.3	3.45	V
USB_VBUS	4.75	5.0	5.25	V

3.8. Electrical Information for Digital I/O

The table below enumerates the electrical characteristics of the following digital interfaces.

- UART
- PCM
- GPIOs
- RESET
- WAKE_UP
- FAST_SHUTDOWN_N
- EXT_LNA_GPS_EN

Table 21. Digital I/O Electrical Characteristics

Parameter	Description	Minimum	Typical	Maximum	Unit
V_{IH}	Logic High Input Voltage	0, 7 x VGPIO			V
V_{IL}	Logic Low Input Voltage			0, 3 x VGPIO	V
V_{OH}	Logic High Output Voltage	0, 8 x VGPIO			V
V_{OL}	Logic Low Output Voltage			0, 2 x VGPIO	V
I_O*	I/O Drive Strength	2		4	mA
R_{PU}	Internal Pull-Down Resistor		TBD		KΩ

Parameter	Description	Minimum	Typical	Maximum	Unit
R_{PD}	Internal Pull Up Resistor		TBD		KΩ
Input Capacitance	Input Pin Capacitance			TBD	pF

* The total current from all I/Os combined, and supplied by VGPIO, should not exceed 50mA.

3.9. General Purpose Input/Output (GPIO)

The AirPrime HL7800 and HL7800-M modules provide 11 GPIOs, 1 of which has a multiplex.

The following table describes the pin description of the GPIO interface.

Table 22. GPIO Pin Description

Pad Number	Signal Name	Multiplex	I/O	Power Supply Domain
C1	GPIO1		I/O	1.8V
C10	GPIO2		I/O	1.8V
C40	GPIO7		I/O	1.8V
C41	GPIO8		I/O	1.8V
C46	GPIO6		I/O	1.8V
C51	GPIO14		I/O	1.8V
C52	GPIO10		I/O	1.8V
C53	GPIO11		I/O	1.8V
C54	GPIO15		I/O	1.8V
C64	GPIO3	UIM1_DET	I/O	1.8V
C66	GPIO5		I/O	1.8V

3.10. Main Serial Link (UART1)

The main serial link (UART1) is used for communication between the AirPrime HL7800 or HL7800-M module and a PC or host processor. It consists of a flexible 8-wire serial interface that complies with RS-232 interface. The main serial link (UART1) is an asynchronous serial interface; and is also used to upgrade the firmware locally.

The signals used by UART1 are as follows:

- TX data (UART1_TX)
- RX data (UART1_RX)
- Request To Send (UART1_RTS)
- Clear To Send (UART1_CTS)
- Data Terminal Ready (UART1_DTR)
- Data Set Ready (UART1_DSR)
- Data Carrier Detect (UART1_DCD)
- Ring Indicator (UART1_RI)

Note: Signal names are according to PC view.

Refer to the following table for the pin description of the main serial link (UART1) interface.

Table 23. UART1 Pin Description

Pad Number	Signal Name*	I/O*	Description
C2	UART1_RI	O	Signal incoming calls (data only), SMS, etc.
C3	UART1_RTS	I	Request to send
C4	UART1_CTS	O	The module is ready to receive AT commands
C5	UART1_TX	I	Transmit data
C6	UART1_RX	O	Receive data
C7	UART1_DTR	I (active low)	Prevents the module from entering sleep mode, switches between data mode and command mode, and wakes the module up.
C8	UART1_DCD	O	Signal data connection in progress
C9	UART1_DSR	O	Signal UART interface is ON

* According to PC view.

3.10.1. 8-wire Application

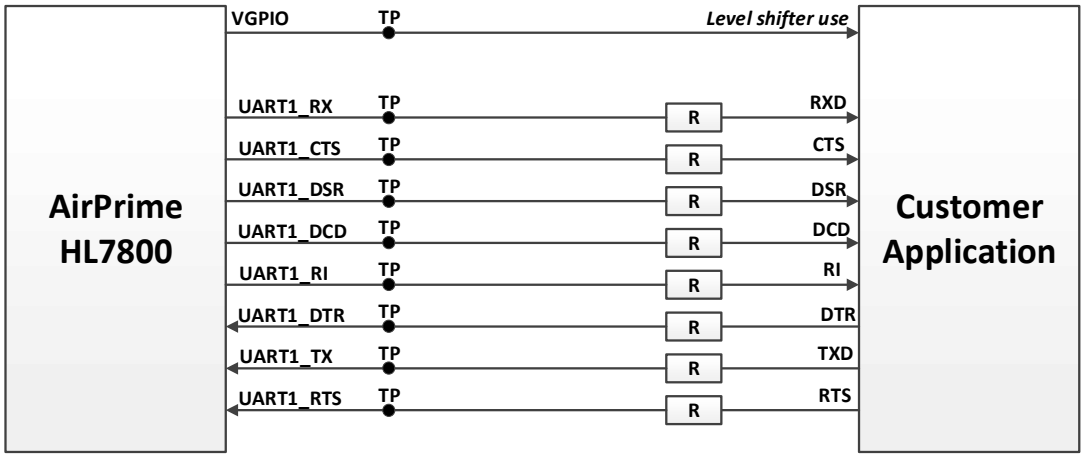

Note: R is a 0Ω resistor (default value)

Figure 6. 8-wire UART Application Example

3.10.2. 4-wire Application (TBC)

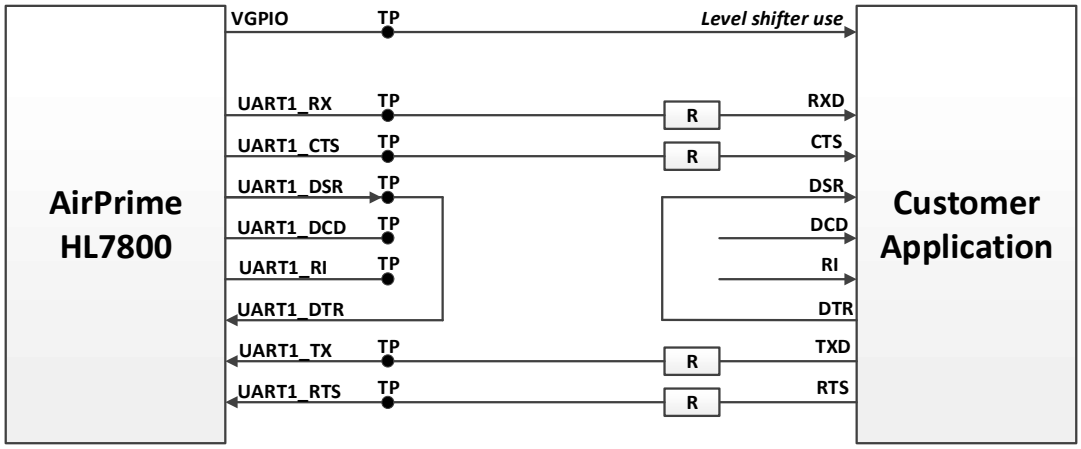

Note: R is a 0Ω resistor (default value)

Figure 7. 4-wire UART Application Example

3.10.3. 2-wire Application (TBC)

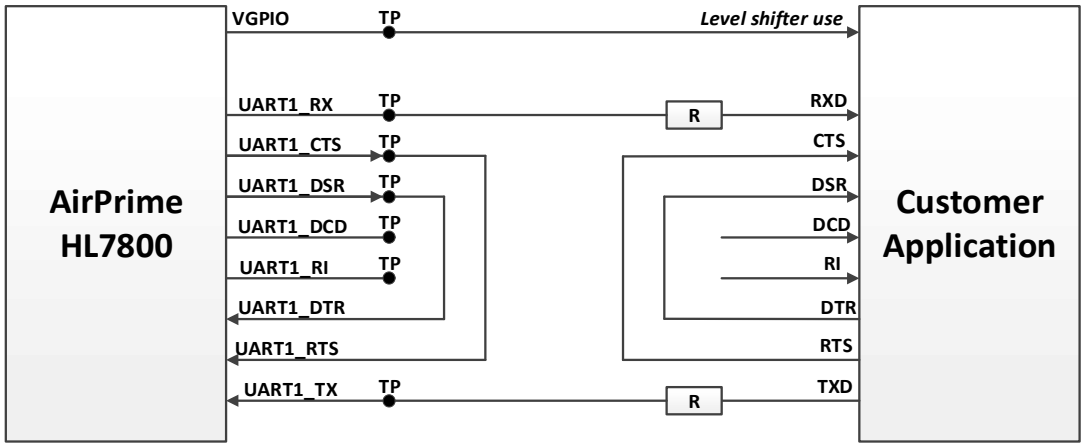

Note: R is a 0Ω resistor (default value)

Figure 8. 2-wire UART Application Example

3.11. Power On Signal (PWR_ON_N)

The PWR_ON_N signal is internally pulled-up. Once VBATT is supplied to the module, the internal supply regulator is enabled and so the PWR_ON_N signal is by default at high level.

In case the PWR_ON_N pin is not configured as managed by host (default configuration), the module starts regardless of the PWR_ON_N state. In case the RESET_IN_N signal is maintained low, the module will not start until RESET_IN_N is released.

In case the PWR_ON_N pin is configured as managed by host, a low-level signal must be provided to switch the module ON.

Table 24. PWR_ON_N Pin Description

Pad Number	Signal Name	I/O	Description
C59	PWR_ON_N	I	Powers the module ON

Table 25. PWR_ON_N Electrical Characteristics

Parameter	Minimum	Typical	Maximum
Input Voltage-Low (V)			0.35 (TBC)

Note: As PWR_ON_N is internally pulled up, an open collector or open drain transistor must be used for ignition.

VGPIO is an output from the module that can be used to check if the module is active.

- When VGPIO = 0V, the module is OFF (or in low power mode)
- When VGPIO = 1.8V, the module is ON (it can be in idle, communication or sleep mode)

*Note: PWR_ON_N cannot be used to power the module off. To power the module off, use AT command **AT+CPOF** or the RESET_IN_N pin.*

3.11.1. Not Managed (Default)

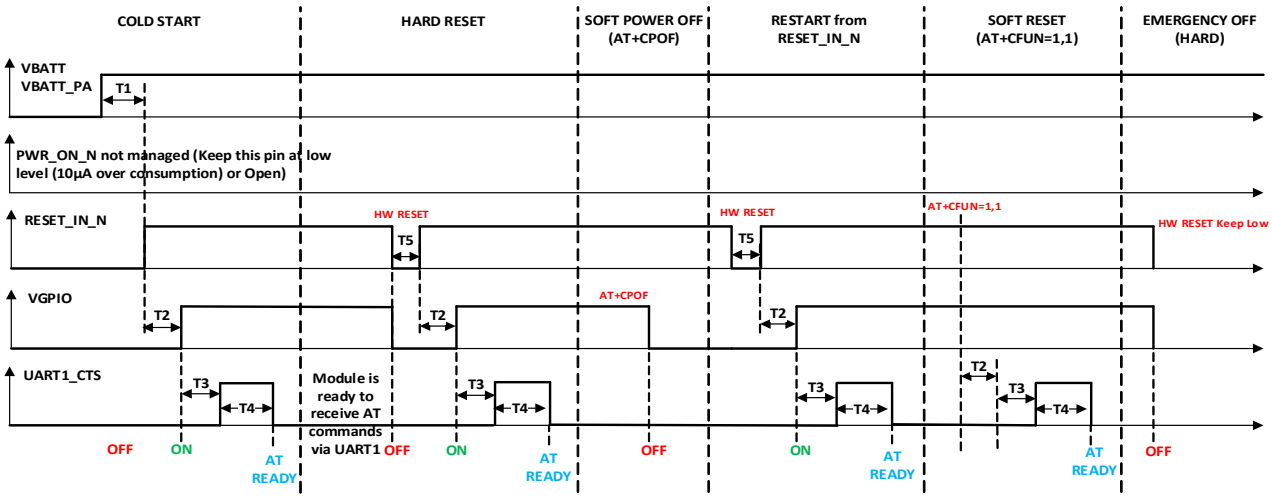

Figure 9. Power Up and Power Down Sequence without PWR_ON_N

Table 26. PWR_ON_N Not Managed Timing

Parameter	Minimum	Typical	Maximum	Unit
T1: delay between VBATT and RESET_IN_N	0 (TBC)		5 (TBC)	µs
T2: delay between RESET_IN_N and VGPIO		5		ms
T3: delay between VGPIO and UART1_CTS		TBD		ms
T4: delay		2 (TBC)		s
T5: HW RESET delay		20 (TBC)		ms

3.11.2. Managed

Note: This interface will be available in a future release. All figures and timings are TBC.

3.11.2.1. First Cold Start

The cold start sequence will appear one time after PWR_ON_N configuration via AT command. Refer to section 3.11.2.2 Power Up and Power Down after the First Cold Start for details.

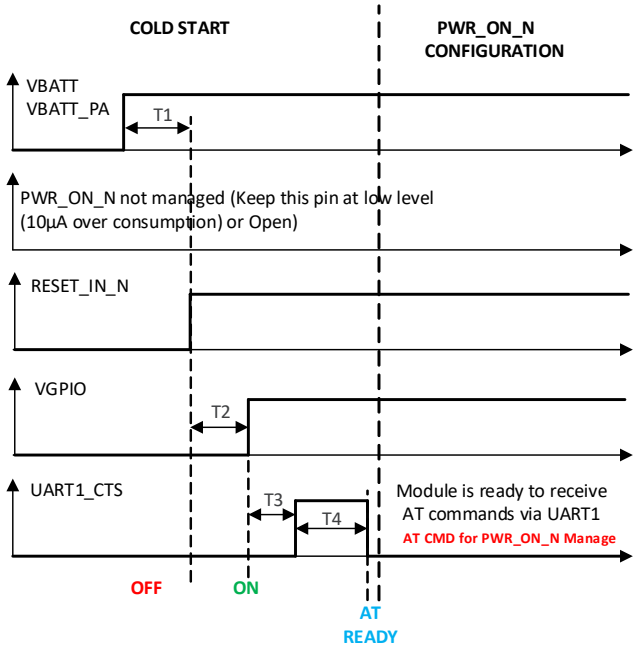

Figure 10. Power Up Sequence with PWR_ON_N Cold Start

3.11.2.2. Power Up and Power Down after the First Cold Start

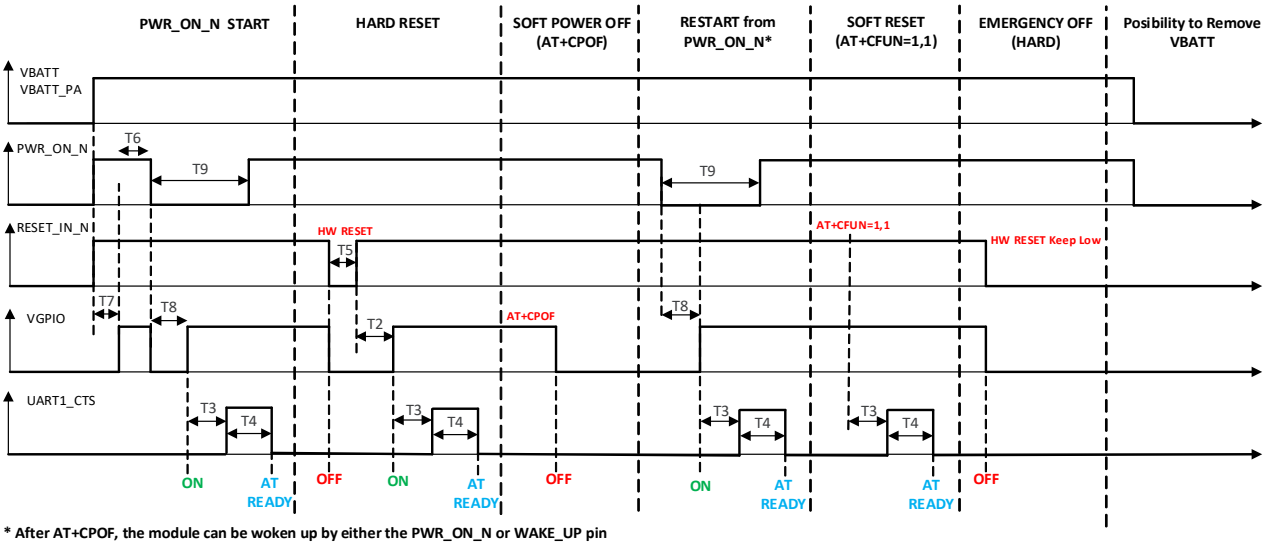

Figure 11. Power On Sequence with PWR_ON_N

3.11.2.3. Timing

Table 27. PWR_ON_N Managed Timing

Parameter	Minimum	Typical	Maximum	Unit
T1: delay between VBATT and RESET_IN_N	0			ms
T2: delay between RESET_IN_N and VGPIO		5		ms
T3: delay between VGPIO and UART1_CTS		TBD		ms
T4: delay		TBD		s
T5: HW RESET delay		20 (TBC)		ms
T6: delay between VBATT and PWR_ON_N		100		ms
T7: delay between VBATT and VGPIO		5		ms
T8: delay between PWR_ON_N and VGPIO		5		ms
T9: PWR_ON_N assertion time	25		1500	ms

3.12. Reset Signal (RESET_IN_N)

To reset the module, a low-level pulse must be sent on the RESET_IN_N pad for 20ms (TBC). This action will immediately restart the module. During the reset, all I/Os will be at 0V if no external signal is driven high (if the host processor drives some I/O high, a voltage leakage will appear on VGPIO and on all GPIOs with a pull-up. It is strongly advised not to drive any I/Os during reset).

As RESET_IN_N is internally pulled up, an open collector or open drain transistor should be used to control this signal.

Refer to the following table for the pad description of the RESET_IN_N interface.

Table 28. RESET_IN_N Pin Description

Pad Number	Signal Name	I/O	Description
C11	RESET_IN_N	I	Reset signal

Refer to the following table for the electrical characteristics of the RESET_IN_N interface.

Table 29. RESET_IN_N Electrical Characteristics

Parameter	Minimum	Typical	Maximum
Input Voltage-Low (V)		TBD	TBD
Input Voltage-High (V)	TBD	TBD	TBD
Reset assertion time (ms)	TBD	TBD	
Power-up period (ms) from RESET_IN_N falling edge*	TBD	TBD	

* With the PWR_ON_N Signal at low level.

Note: As RESET_IN_N is internally pulled up, an open collector or open drain transistor must be used for ignition.

3.13. Analog to Digital Converter (ADC)

Note: This interface will be available in a future release.

Two Analog to Digital Converter inputs, ADC0 and ADC1, are provided by AirPrime HL7800 and HL7800-M modules. These converters are 12-bit resolution ADCs ranging from 0 to 1.8V.

Typical ADC use is for monitoring external voltage, wherein an application is used to safely power OFF an external supply in case of overvoltage.

Refer to the following table for the pad description of the ADC interface.

Table 30. ADC Pin Description

Pad Number	Signal Name	I/O	Description
C24	ADC1	I	Analog to digital converter
C25	ADC0	I	Analog to digital converter

Refer to the following table for the electrical characteristics of the ADC interface.

Table 31. ADC Electrical Characteristics

Parameter	Typical	Maximum	Unit	Remarks
ADCx Resolution	12		bits	
Conversion Rate	TBD		MHz	
Input Voltage Range	1.8		V	General purpose input
Update rate per channel	TBD		kHz	
Integral Nonlinearity	± 1.0 (TBC)	± 2.0 (TBC)	LSB	
Differential Nonlinearity	± 0.5 (TBC)	± 0.9 (TBC)	LSB	
Offset Error	1 (TBC)	2 (TBC)	LSB	% FS
Gain Error	1 (TBC)	2 (TBC)	LSB	% FS
Input Resistance	TBD		MΩ	
Input Capacitance during sampling phase	TBD		pF	

3.14. Clock Interface

Note: This interface will be available in a future release.

The AirPrime HL7800 and HL7800-M modules support two digital clock interfaces.

Enabling or disabling the clock out feature can be done using AT commands. For more information about AT commands; refer to document [2] AirPrime HL78xx AT Commands Interface Guide.

Refer to the following table for the pad description of the clock out interfaces.

Table 32. Clock Interface Pin Description

Pad Number	Signal Name	I/O	I/O Type	Description
C22	26M_CLKOUT	O	1.8V	26MHz Digital Clock output
C23	32K_CLKOUT	O	1.8V	32.768kHz Digital Clock output

3.15. PCM

Note: This interface will be available in a future release.

3.16. Debug Interface

The AirPrime HL7800 and HL7800-M modules provide a 4-wire debug port interface.

Table 33. Debug Pin Description

Pad Number	Signal Name*	I/O*	I/O Type	Description
C55	UART0_RX	O	1.8V	Debug Receive Data
C56	UART0_TX	I	1.8V	Debug Transmit Data
C57	UART0_CTS	O	1.8V	Debug Clear to Send
C58	UART0_RTS	I	1.8V	Debug Request to Send

* According to PC view.

Note: It is strongly recommended to provide access through Test Points to this interface (required to enter in recovery mode; for example, for Flash dump).

3.17. Wake Up Signal (WAKE_UP)

The AirPrime HL7800 and HL7800-M modules provide one WAKE_UP signal.

The WAKE_UP pin is used to wake up the system from low power modes (from OFF, Sleep modes, FAST_SHUTDOWN, or after a software power off). This signal should be set to high level (external 1.8V) for at least (TBD) ms until the system is active to wake the module up from these modes.

The system will not be allowed to go into ultra-low or off mode for as long as this signal is kept high.

By default, the software waits for a high state to wake up (100KΩ internal pull-down).

Refer to the following table for the pad description of the WAKE_UP signal.

Table 34. WAKE_UP Pin Description

Pad Number	Signal Name	I/O	I/O Type	Description
C44	WAKE_UP	I	1.8V	Wakes the module up from low power mode

Refer to the following table for the electrical characteristics of the WAKE_UP signal.

Table 35. WAKE_UP Electrical Characteristics

I/O Type	Parameter	Minimum	Typical	Maximum	Unit
Digital	V_{IL}			0.3xVDDIO	V
	V_{IH}	0.7 x VDDIO*			V

* VDDIO = VGPIO = 1.8 V.

3.18. Fast Shutdown Signal (FAST_SHUTDOWN_N)

Note: This signal will be available in a future release.

The AirPrime HL7800 and HL7800-M modules provide one Fast Shutdown signal, FAST_SHUTDOWN_N.

Refer to the following table for the pad description.

Table 36. FAST_SHUTDOWN_N Pin Description

Pad Number	Signal Name	I/O	I/O Type	Description
C65	FAST_SHUTDOWN_N	I	1.8V	Shuts the module down without deregistration from the network

Refer to the following table for the electrical characteristics of the FAST_SHUTDOWN_N signal.

Table 37. FAST_SHUTDOWN_N Electrical Characteristics

I/O Type	Parameter	Minimum	Typical	Maximum	Unit
Digital	V_{IL}			0.3xVDDIO	V
	V_{IH}	0.7 x VDDIO			V

* VDDIO = VGPIO = 1.8 V.

3.19. RF Interface

The RF interface of the AirPrime HL7800 and HL7800-M modules allow the transmission of RF signals.

Contact Sierra Wireless technical support for assistance in integrating the AirPrime HL7800 or HL7800-M on applications with embedded antennas.

3.19.1. RF Connection

A 50Ω (with maximum VSWR 1.1:1, and 0.5dB loss) RF track is recommended to be connected to standard RF connectors such as SMA, UFL, etc. for antenna connection.

Refer to the following table for the pad description of the RF interface.

Table 38. RF Main Pin Description

Pad Number	RF Signal	Impedance	VSWR Rx (max)	VSWR Tx (max)
C48	GND			
C49	RF_MAIN	50Ω	2.5:1	2.5:1
C50	GND			

3.19.2. Maximum Output Power

The maximum transmitter output power of the AirPrime HL7800 and HL7800-M for all bands in normal operation conditions (25°C) is specified in the following table.

Table 39. Maximum Output Power

Minimum	Typical	Maximum	Units	Notes
21.5	23	24.5	dBm	Power class 3

3.19.3. Rx Sensitivity

The module's receiver sensitivity is specified in the following table. The test condition used for the following values are as follows:

- Cat-M1
- BW: 5 MHz

Table 40. Typical Conducted RX Sensitivity

LTE Band	Typical Reference Sensitivity Level @ 95% of the Maximum Throughput		
	@+25°C (dBm)	@Class A (dBm)	3GPP Limit (dBm)
B1	-105 (TBC)	TBD	-102.3
B2	-106 (TBC)	TBD	-100.3
B3	-106.5	-102.8	-99.3

LTE Band	Typical Reference Sensitivity Level @ 95% of the Maximum Throughput		
	@+25°C (dBm)	@Class A (dBm)	3GPP Limit (dBm)
B4	-105.7	-103.7 (TBC)	-102.3
B5	-106.5	-104.5	-100.8
B8	-106.8 (TBC)	TBD	-99.8
B9	-106	TBD	TBD
B10	-105 (TBC)	TBD	TBD
B12	-105.7	-105.1	-99.3
B13	-106	-104.9	-99.3
B14	-106	-105	TBD
B17	-106	-104.8	TBD
B18	-106.5	-105	-100.3
B19	-106.3	-105.5	-102.3
B20	-106	-104	-99.8
B25	-105.7 (TBC)	TBD	TBD
B26	-107	-104.8	-100.3
B27	-106.7	-105	-100.8
B28	-106.2 (TBC)	TBD	-100.8
B66	-105.5 (TBC)	TBD	TBD

3.19.4. TX Indicator (TX_ON)

The AirPrime HL7800 and HL7800-M modules provide a signal, TX_ON, for TX emission indication.

Table 41. TX_ON Pin Description

Pad Number	Signal Name	I/O	I/O Type	Description
C60	TX_ON	O	1.8V	High during TX emission, low when there is no TX

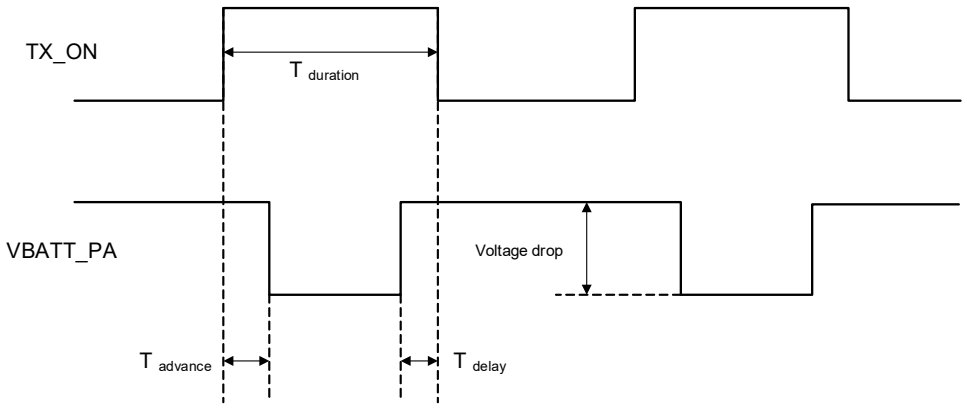

Figure 12. TX_ON State during TX Burst

Table 42. TX_ON Characteristics

Parameter	Typical
Tadvance	30 µs
Tdelay	TBD

3.20. GPS Interface

Note: This interface will be available in a future release.

The AirPrime HL7800 and HL7800-M's GPS supports GPS L1 signal (1575.42 ± 20 MHz) and GLONASS L1 FDMA signals (1597.5 – 1605.8 MHz), with 50Ω connection on the RF_GPS pad.

Note: The GPS receiver shares the same RF resources as the 4G receiver. The end-device target should allow GPS positioning for asset management applications where infrequent and no real-time position updates are required.

GPS antenna interface specifications are defined in the table below.

Table 43. GPS Antenna Specifications

Characteristics		Value
Frequency (MHz)	GPS L1	1575.42 ± 20
RF Impedance (Ω)		50
VSWR max		2:1

3.20.1. GPS Performance

Refer to the following table for GPS performance details.

Table 44. GPS Performance

Parameters	Conditions	Typical Value
Sensitivity	Cold Start	-146dBm (TBC)
	Hot Start	-152dBm (TBC)
	Tracking	-161dBm (TBC)
TTFF	Cold start, Input power -130dBm	35s (TBC)
	Hot start, Input power -130dBm	2s (TBC)
2D Position Error	Input power -130dBm	2.5m (TBC)

3.20.2. GPS Antenna Indicator (EXT_LNA_GPS_EN)

Note: This signal will be available in a future release.

4. Mechanical Drawings

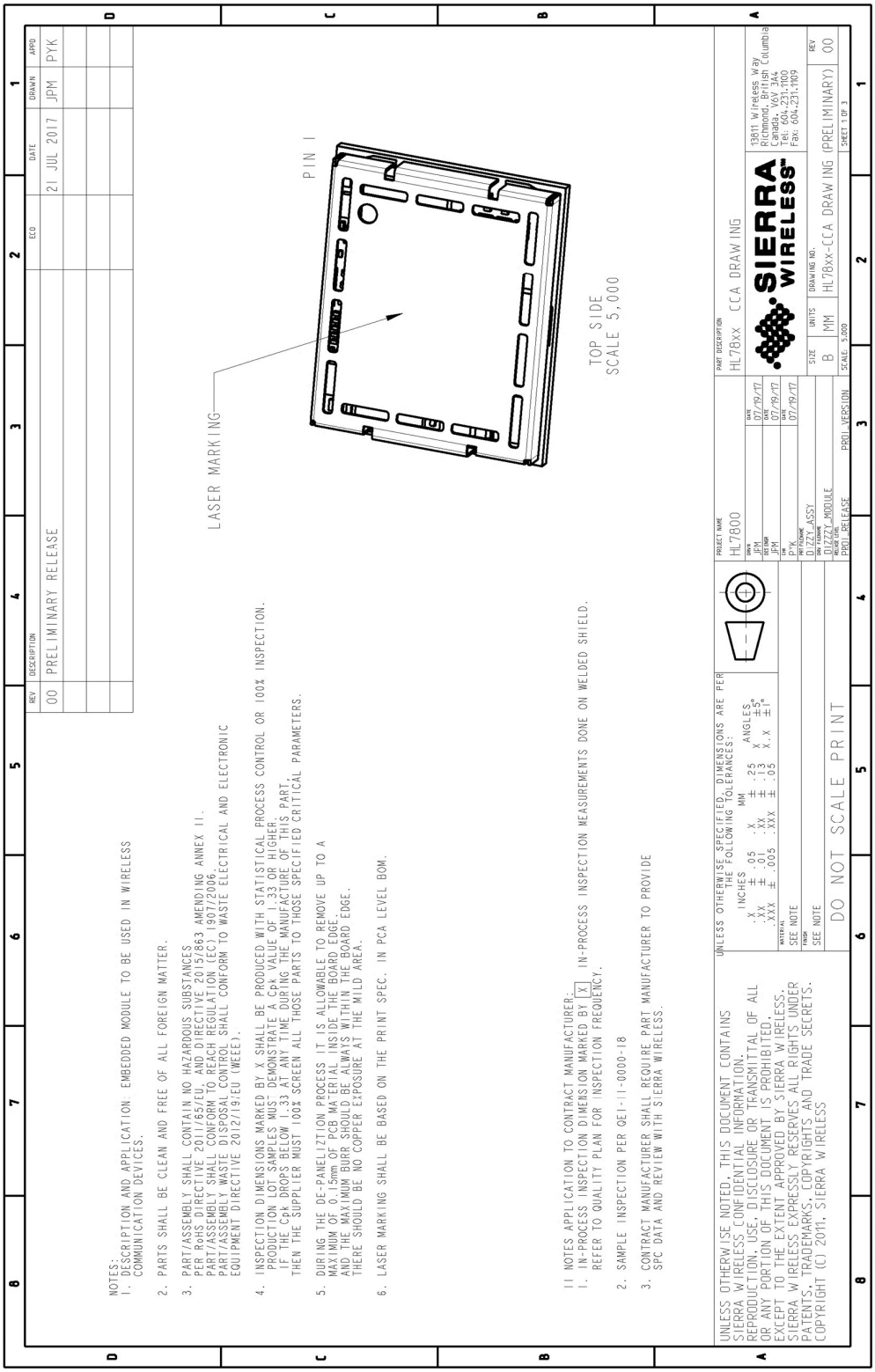

Figure 13. Mechanical Drawing

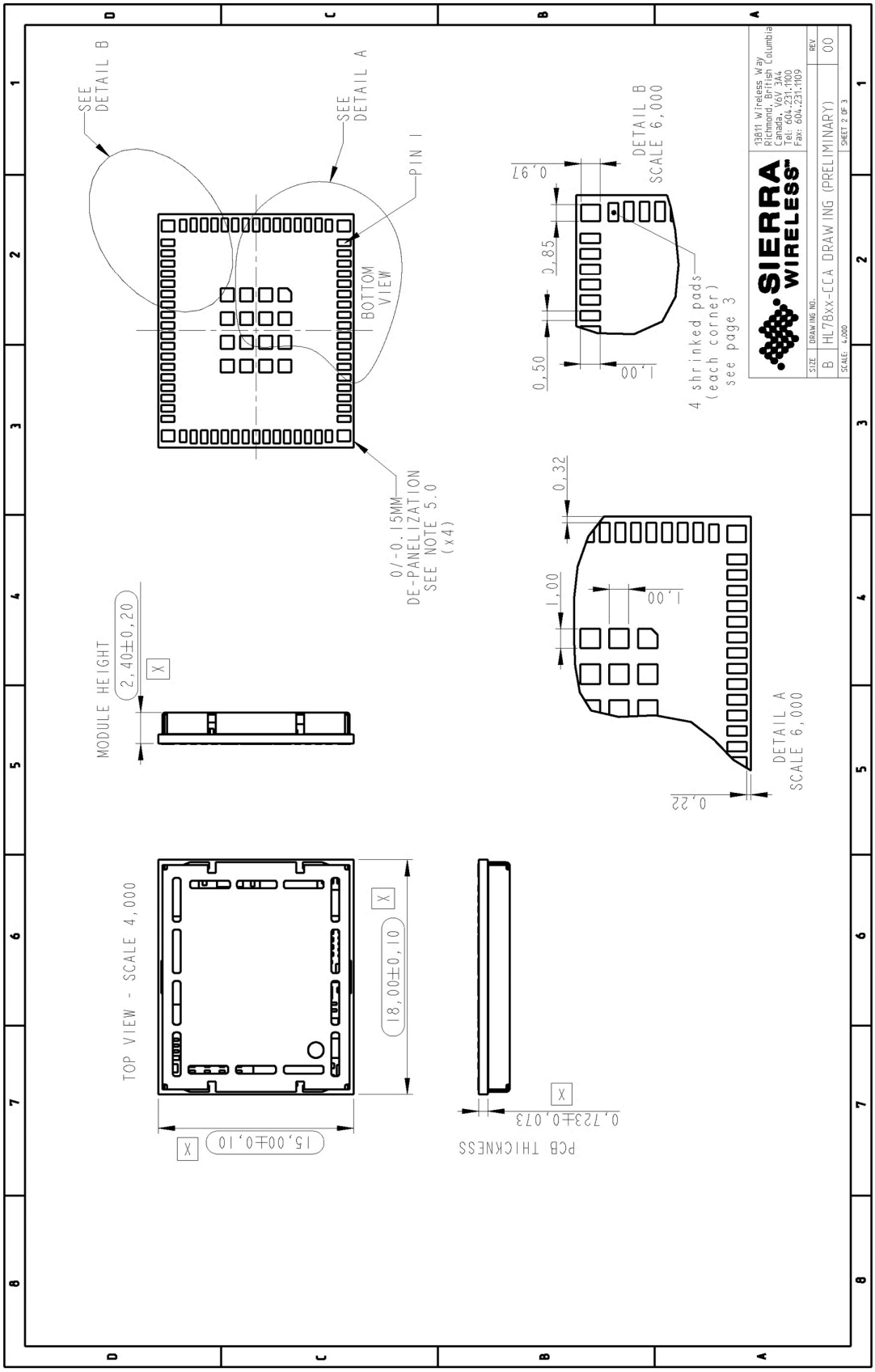

Figure 14. Dimensions Drawing

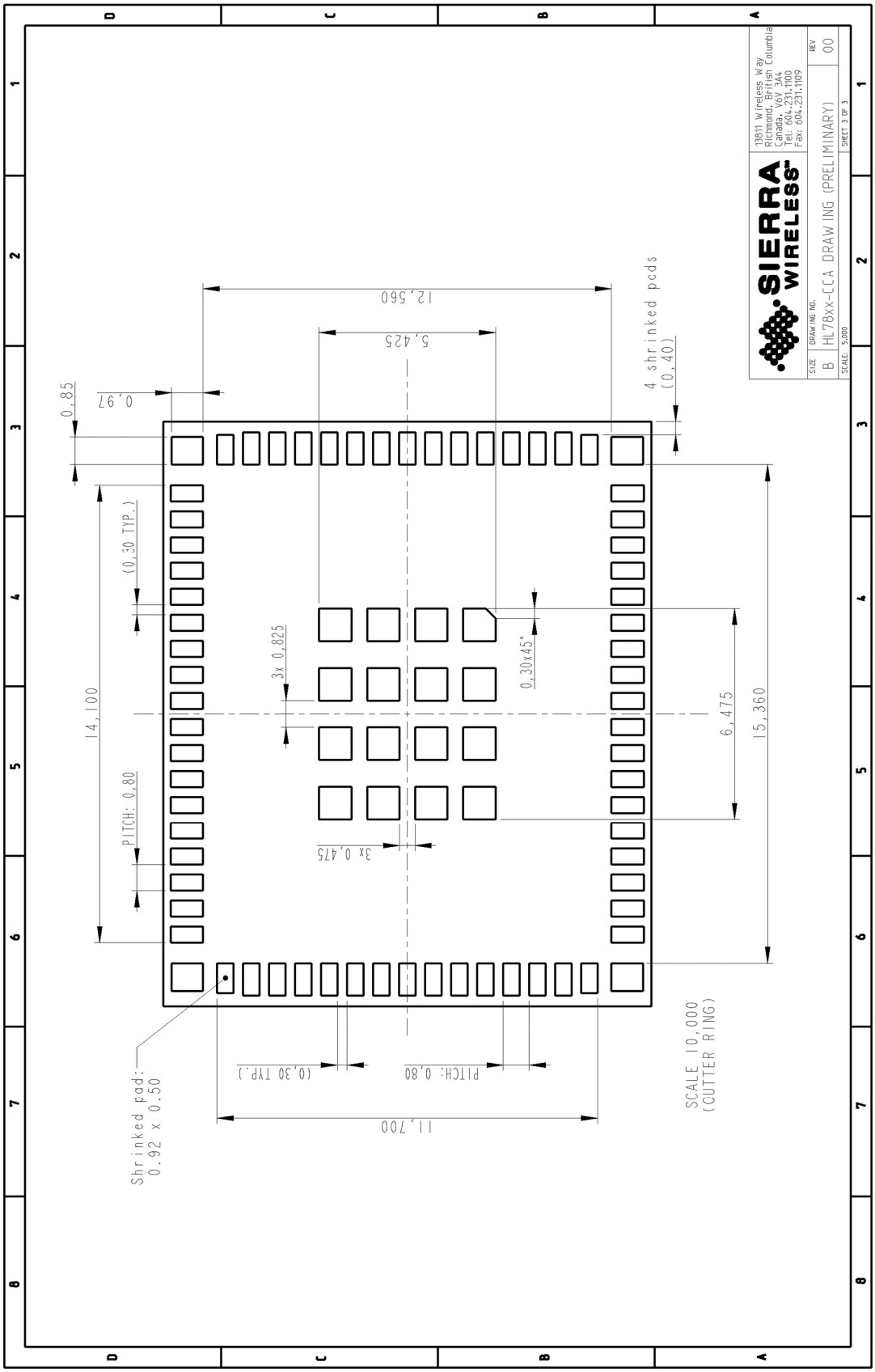

Figure 15. Footprint Drawing

5. Reliability Specification

The AirPrime HL7800 and HL7800-M modules will be tested against the Sierra Wireless Industrial Reliability Specification defined below.

5.1. Preconditioning Test

Per JESD22A113, this test the preconditioning of non-hermetic surface mount devices prior to reliability testing.

Table 45. Preconditioning Test

Designation	Condition
Preconditioning Test PCRM	2 reflow cycles with Tmax 245-250°C

5.2. Performance Test

Table 46. Performance Test

Designation	Condition
Performance Test PT3T & PTRT	Standard: N/A
	Special conditions: • Temperature: ▪ Class A: -30°C to +70°C ▪ Class B: -40°C to +85°C ▪ Rate of temperature change: ± 3°C/min • Recovery time: 3 hours
	Operating conditions: Powered
	Duration: 14 days

5.3. Aging Tests

Table 47. Aging Tests

Designation	Condition
High Temperature Operating Life test **HTOL** 	Standard: IEC 680068-2-2, Test Bb
	Special conditions: • Temperature: +85°C • Temperature variation: 1°C/min
	Operating conditions: Powered ON with a power cycle of 45 minutes ON and 15 minutes Idle
	Duration: 20 days
Thermal Shock Test **TSKT** 	Standard: IEC 60068-2-14, Test Na
	Special conditions: • Temperature: -40°C to +85°C • Temperature Variation: less than 30s • Number of cycles: 300 • Dwell Time: 10 minutes
	Operating conditions: Un-powered
	Duration: 7 days
Humidity Test **HUT** 	Standard: IEC 60068-2-3, Test Ca
	Special conditions: • Temperature: +85°C • RH: 85%
	Operating conditions: Powered on, DUT is powered up for 15 minutes and OFF for 15 minutes
	Duration: 10 days

5.4. Characterization Tests

Table 48. Characterization Tests

Designation	Condition
Low Temperature and Cold Start Cycles **LTCS**	Special conditions: • Temperature: -40°C • AT commands read or write memory
	Operating conditions: 5 mins powered ON, 30 mins powered OFF (1 power cycle)
	Duration: 5 days
Component Solder Wettability **CSW** 	Standard: JESD22 – B102, Method 1/Condition C, Solderability Test Method
	Special conditions: • Test method: Surface mount process simulation test (preconditioning 16 h ±30 minutes dry bake)
	Operating conditions: Un-powered
	Duration: 1 day
Unprotected Free Fall Test **FFT 1** 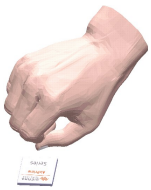	Standard: IEC 60068-2-32, Test Ed
	Special conditions: • Number of drops: 6 drops per unit (1 drop per direction: ±X, ±Y, ±Z) • Height: 1m
	Operating conditions: Un-powered
	Duration: 1 day

6. Legal Information

6.1. Japan Radio and Telecom Approval

The end device embedding the AirPrime HL7800 or HL7800-M should affix the certification indication on its surface following the recommendations below:

- The diameter of the Japan Approval mark must be 3mm or bigger.
- The size, font and color of the Radio Certification Type number is not regulated but should be easily distinguished.

Figure 16. Sample Japan Certification Indication

6.2. FCC Statement

6.2.1. Applicable Rules

Here is a list of the FCC rules applicable to the product:

- FCC Part 2
- FCC Part 22, Subpart H
- FCC Part 24, Subpart E
- FCC Part 27, Subpart C, H, F, L
- FCC Part 90, Subpart I, S, R

6.2.2. Radiation Exposure Statement

This equipment has been granted modular approval for mobile applications. Integrators may use this equipment in their end products without additional FCC certification if they meet the following conditions. Otherwise, additional FCC approvals must be obtained.

1. The end product must use the RF trace design approved with the equipment. The Gerber file of the trace design can be obtained from Sierra Wireless upon request.

2. At least 20 cm separation distance between the antenna and the user's body must be maintained at all times.

3. To comply with FCC/IC regulations limiting both maximum RF output power and human exposure to RF radiation, the maximum antenna gain including cable loss in a mobile-only exposure condition must not exceed the limits stipulated in the below table

Operating Band	TX Freq Range (MHz)		Antenna Gain Limits(dBi)	
			Standalone	Collocated
LTE Band 2	1850	1910	6	6
LTE Band 4	1710	1755	6	6
LTE Band 5	824	849	6	4
LTE Band 12	699	716	6	4
LTE Band 13	777	787	6	4
LTE Band 14	788	798	6	3
LTE Band 17	704	716	6	3
LTE Band 25	1850	1915	6	6
LTE Band 26	814	849	6	3
LTE Band 66	1710	1780	6	6

4. The equipment may transmit simultaneously with other collocated radio transmitters within a host device, provided the following conditions are met:
    a. Each collocated radio transmitter has been certified by FCC/IC for mobile application.
    b. At least 20 cm separation distance between the antennas of the collocated transmitters and the user's body must be maintained at all times.
    c. The radiated power of a collocated transmitter must not exceed the EIRP limit stipulated in the table below.

Operating Mode	TX Freq Range (MHz)	EIRP Limits (dBm)
WLAN 2.4 GHz	2400 - 2500	30
WLAN 5 GHz	5150 - 5850	30
BT	2400 - 2500	16
WiGig	58320 - 62640	25

The end product with this equipment embedded may also need to pass the FCC Part 15 unintentional emission testing requirements and be properly authorized per FCC Part 15.

6.2.3. End Product Labeling

6.2.3.1. HL7800-M

This transmitter module is authorized only for use in device where the antenna may be installed such that 20 cm may be maintained between the antenna and users. The final end product must be labeled in a visible area with the following: “Contains FCC ID: **N7NHL78M**”. The grantee's FCC ID can be used only when all FCC compliance requirements are met.

6.2.3.1. HL7800

This transmitter module is authorized only for use in device where the antenna may be installed such that 20 cm may be maintained between the antenna and users. The final end product must be labeled in a visible area with the following: “Contains FCC ID: **N7NHL78**”. The grantee's FCC ID can be used only when all FCC compliance requirements are met.

6.2.4. Manual Information to the End User

The OEM integrator has to be aware not to provide information to the end user regarding how to install or remove this RF module in the user’s manual of the end product which integrates this module.

The end user manual shall include all required regulatory information/warning as show in this manual.

Antenna installation:

The RF signal must be routed on the application board using tracks with a 50Ω characteristic impedance. Basically, the characteristic impedance depends on the dielectric, the track width and the ground plane spacing. In order to respect this constraint, Sierra Wireless recommends using MicroStrip or StripLine structure and computing the Tracks width with a simulation tool (like AppCad shown in the figure below and that is available free of charge at http://www.agilent.com).

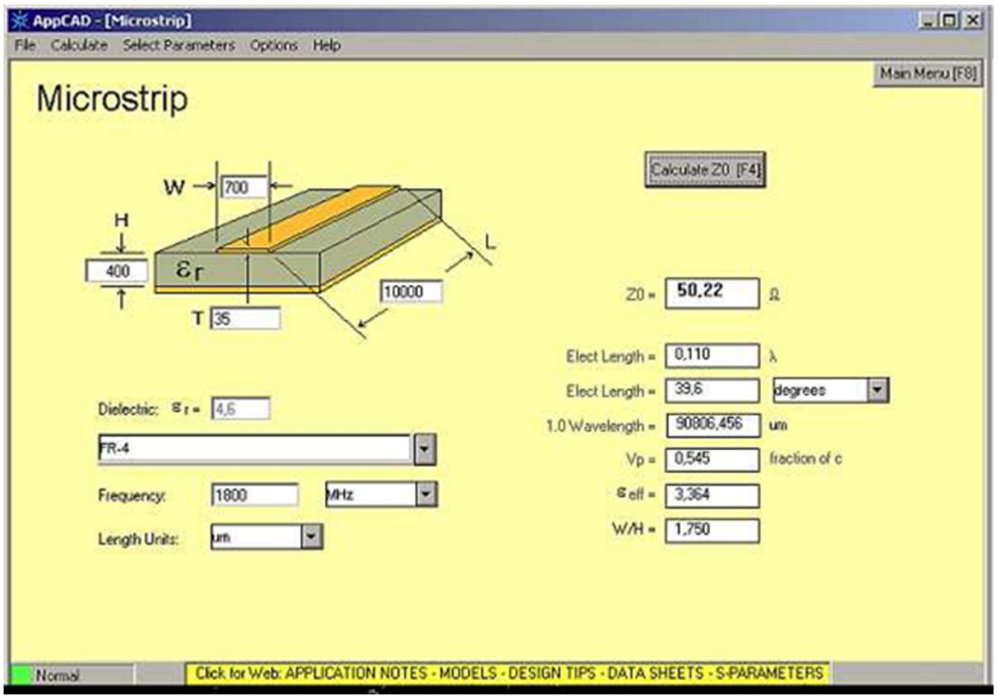

If a multi-layered PCB is used, the RF path on the board must not cross any signal (digital, analog or supply).

If necessary, use StripLine structure and route the digital line(s) "outside" the RF structure. An example of proper routing is shown in the figure below.

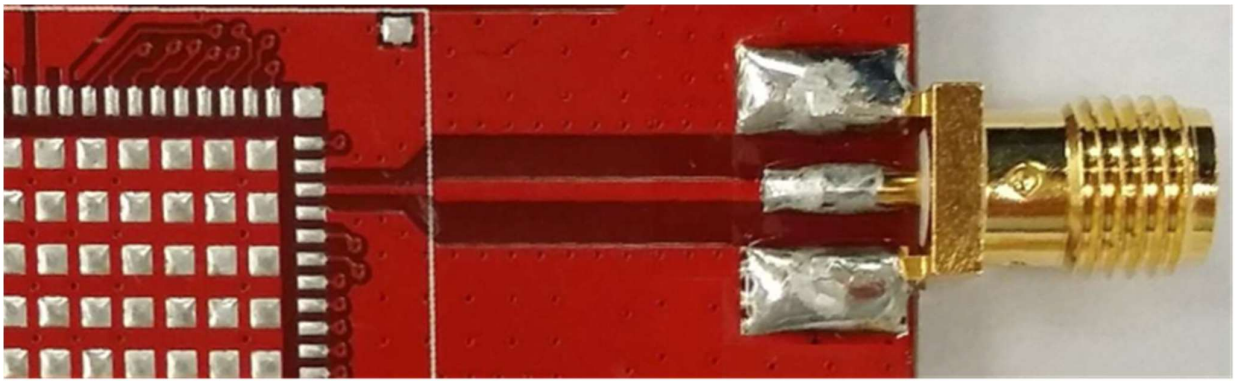

Stripline and Coplanar design requires having a correct ground plane at both sides. Consequently, it is necessary to add some vias along the RF path. It is recommended to use Stripline design if the RF path is fairly long (more than 3cm), since MicroStrip design is not shielded. Consequently, the RF signal (when transmitting) may interfere with neighbouring electronics (AF amplifier, etc.). In the same way, the neighbouring electronics (microcontrollers, etc.) may degrade the reception performances. The GSM/GPRS connector is

intended to be directly connected to a 50Ω antenna and no matching is needed.

6.3. IC Statement

This device complies with Industry Canada license-exempt RSS standard(s). Operation is subject to the following two conditions:

1. this device may not cause interference, and
2. this device must accept any interference, including interference that may cause undesired operation of the device.

Le présent appareil est conforme aux CNR d'Industrie Canada applicables aux appareils radio exempts de licence. L'exploitation est autorisée aux deux conditions suivantes:

1. l'appareil ne doit pas produire de brouillage, et
2. l'utilisateur de l'appareil doit accepter tout brouillage radioélectrique subi, même si le brouillage est susceptible d'en compromettre le fonctionnement.

This Class B digital apparatus complies with Canadian ICES-003.

Cet appareil numérique de la classe B est conforme à la norme NMB-003 du Canada.

This device complies with RSS-310 of Industry Canada. Operation is subject to the condition that this device does not cause harmful interference.

Cet appareil est conforme à la norme RSS-310 d'Industrie Canada. L'opération est soumise à la condition que cet appareil ne provoque aucune interférence nuisible.

This device and its antenna(s) must not be co-located or operating in conjunction with any other antenna or transmitter, except tested built-in radios.

Cet appareil et son antenne ne doivent pas être situés ou fonctionner en conjonction avec une autre antenne ou un autre émetteur, exception faites des radios intégrées qui ont été testées.

The County Code Selection feature is disabled for products marketed in the US/ Canada.

La fonction de sélection de l'indicatif du pays est désactivée pour les produits commercialisés aux États-Unis et au Canada.

6.3.1. Radiation Exposure Statement / Déclaration d'Exposition aux Radiations

This equipment complies with IC radiation exposure limits set forth for an uncontrolled environment. This equipment should be installed and operated with minimum distance 20 cm between the radiator and your body.

Cet équipement est conforme aux limites d'exposition aux rayonnements IC établies pour un environnement non contrôlé. Cet équipement doit être installé et utilisé avec un minimum de 20 cm de distance entre la source de rayonnement et votre corps.

This device is intended only for OEM integrators under the following conditions: (For module device use)

1. The antenna must be installed such that 20 cm is maintained between the antenna and users, and
2. The transmitter module may not be co-located with any other transmitter or antenna.

As long as the 2 conditions above are met, further transmitter test will not be required. However, the OEM integrator is still responsible for testing their end-product for any additional compliance requirements required with this module installed.

Cet appareil est conçu nt pour les intégrateurs OEM dans les conditions suivantes: (Pour utilisation de dispositif module)

1. L'antenne doit être installée de telle sorte qu'une distance de 20 cm est respectée entre l'antenne et les utilisateurs, et
2. Le module émetteur peut ne pas être coïmplanté avec un autre émetteur ou antenne.

Tant que les 2 conditions ci-dessus sont remplies, des essais supplémentaires sur l'émetteur ne seront pas nécessaires. Toutefois, l'intégrateur OEM est toujours responsable des essais sur son produit final pour toutes exigences de conformité supplémentaires requis pour ce module installé.

IMPORTANT NOTE: In the event that these conditions cannot be met (for example certain laptop configurations or co-location with another transmitter), then the Canada authorization is no longer considered valid and the IC ID cannot be used on the final product. In these circumstances, the OEM integrator will be responsible for re-evaluating the end product (including the transmitter) and obtaining a separate Canada authorization.

NOTE IMPORTANTE: Dans le cas où ces conditions ne peuvent être satisfaites (par exemple pour certaines configurations d'ordinateur portable ou de certaines co-localisation avec un autre émetteur), l'autorisation du Canada n'est plus considéré comme valide et l'ID IC ne peut pas être utilisé sur le produit final. Dans ces circonstances, l'intégrateur OEM sera chargé de réévaluer le produit final (y compris l'émetteur) et l'obtention d'une autorisation distincte au Canada.

6.3.2. End Product Labeling / Plaque Signalétique du Produit Final

6.3.2.1. HL7800-M

This transmitter module is authorized only for use in device where the antenna may be installed such that 20 cm may be maintained between the antenna and users. The final end product must be labeled in a visible area with the following: “Contains IC: **2417C-HL78M**”.

Ce module émetteur est autorisé uniquement pour une utilisation dans un dispositif où l'antenne peut être installée de telle sorte qu'une distance de 20cm peut être maintenue entre l'antenne et les utilisateurs. Le produit final doit être étiqueté dans un endroit visible avec l'inscription suivante: "Contient des IC: **2417C-HL78M**".

6.3.2.1. HL7800

This transmitter module is authorized only for use in device where the antenna may be installed such that 20 cm may be maintained between the antenna and users. The final end product must be labeled in a visible area with the following: “Contains IC: **2417C-HL78**”.

Ce module émetteur est autorisé uniquement pour une utilisation dans un dispositif où l'antenne peut être installée de telle sorte qu'une distance de 20cm peut être maintenue entre l'antenne et les utilisateurs. Le produit final doit être étiqueté dans un endroit visible avec l'inscription suivante: "Contient des IC: **2417C-HL78**".

6.3.3. Manual Information to the End User / Manuel d'Information à l'Utilisateur Final

The OEM integrator has to be aware not to provide information to the end user regarding how to install or remove this RF module in the user’s manual of the end product which integrates this module.

The end user manual shall include all required regulatory information/warning as show in this manual.

L'intégrateur OEM doit être conscient de ne pas fournir des informations à l'utilisateur final quant à la façon d'installer ou de supprimer ce module RF dans le manuel de l'utilisateur du produit final qui intègre ce module.

Le manuel de l'utilisateur final doit inclure toutes les informations réglementaires requises et avertissements comme indiqué dans ce manuel.

7. Ordering Information

Table 49. Ordering Information

Model Name	Description	Part Number
HL7800	HL7800 embedded module	Contact Sierra Wireless for the latest SKU
HL7800-M	HL7800-M embedded module	Contact Sierra Wireless for the latest SKU
DEV-KIT	HL Series Development Kit	TBD

8. Terms and Abbreviations

Abbreviation	Definition
ADC	Analog to Digital Converter
AGC	Automatic Gain Control
AT	Attention (prefix for modem commands)
CDMA	Code Division Multiple Access
CF3	Common Flexible Form Factor
CLK	Clock
CODEC	Coder Decoder
CPU	Central Processing Unit
DAC	Digital to Analog Converter
DTR	Data Terminal Ready
DRX	Discontinuous Reception
eDRX	Extended DRX
EMC	Electro-Magnetic Compatibility
EMI	Electro-Magnetic Interference
EN	Enable
ESD	Electro-Static Discharges
ETSI	European Telecommunications Standards Institute
FDMA	Frequency-division multiple access
GLONASS	Global Navigation Satellite System
GND	Ground
GNSS	Global Navigation Satellite System
GPIO	General Purpose Input Output
GPRS	General Packet Radio Service
GSM	Global System for Mobile communications
Hi Z	High impedance (Z)
IC	Integrated Circuit
IMEI	International Mobile Equipment Identification
I/O	Input / Output
LED	Light Emitting Diode
LNA	Low Noise Amplifier
MAX	Maximum
MIN	Minimum
N/A	Not Applicable
PA	Power Amplifier
PC	Personal Computer
PCB	Printed Circuit Board
PCL	Power Control Level
PLL	Phase Lock Loop
PSM	Power Save Mode
PSRAM	Pseudo Static RAM
PSU	Power Supply Unit

Abbreviation	Definition
PTW	Paging Time Window
PWM	Pulse Width Modulation
RF	Radio Frequency
RFI	Radio Frequency Interference
RMS	Root Mean Square
RST	Reset
RTC	Real Time Clock
RX	Receive
SCL	Serial Clock
SDA	Serial Data
SIM	Subscriber Identification Module
SMD	Surface Mounted Device/Design
SPI	Serial Peripheral Interface
SW	Software
TBC	To Be Confirmed
TBD	To Be Defined
TP	Test Point
TX	Transmit
TYP	Typical
UART	Universal Asynchronous Receiver-Transmitter
UICC	Universal Integrated Circuit Card
USB	Universal Serial Bus
UIM	User Identity Module
VBATT	Main Supply Voltage from Battery or DC adapter
VSWR	Voltage Standing Wave Ratio