Measurement Report

Product ..... ***: DOCSIS Cable Modem***
Applicant ..... ***: TURBOCOMM TECH. INC.***
FCC ID ..... ***: N7ZECM100***
Model ..... ***: DAZ8801F Series / ECM100 Series (See Appendix II)***
Report No. ..... *: MLT9905P15005*
Test Date ..... ***: 05/18/1999***

Test By

Max Light Technology Co.,Ltd.

Room 5, 8F, No.125, Section 3 Roosevelt Road,

Taipei, Taiwan., R.O.C.

Tel: 886-2-2363-2447 Fax: 886-2-2363-2597

Table of Contents :

I. General ---------- *4.*

II. Conducted Emissions Requirements ---------- *12*

III. Radiated Emissions Requirements ---------- *20*

Appendix I (EUT Test Setup) ---------- *30*

Appendix II (Model List) ---------- *32*

CERTIFICATION

We here by verify that :

The test data, data evaluation, test procedures and equipment configurations shown in this report were made in accordance with the procedures given in ANSI C63.4-1992. All test were conducted by *MLT(Max Light Technology Co.,Ltd) Room 5, 8F, No.125, Section 3 Roosevelt Road, Taipei, Taiwan, R.O.C* **Also, we attest to the accuracy of each.**

We further submit that the energy emitted by the sample EUT tested as described in the report is in compliance with Class B radiated and conducted emission limit of FCC Rules Part 15 Subpart B.

EUT : **DOCSIS Cable Modem**

Applicant : **TURBOCOMM TECH. INC.**
4F-2, No.171, Sung-Tech Road,
Taipei ,Taiwan

Manufacturer : **CASTLENET TECHNOLOGY INC.**
No.130, Wu-Kung Rd., Wu-Ku Hsiang
Taipei Hsien ,Taiwan

Model No : **DAZ8801F Series / ECM100 Series (See Appendix II)**

FCC ID : **N7ZECM100**

Prepared by : _____ *Approved by :* _____
Country Huang Roger Chen

I. GENERAL

1.1 Introduction

The following measurement report is submitted on behalf of TURBOCOMM TECH. INC. In support of a Class B Digital Device certification in accordance with Part2 Subpart J and Part 15 Subpart A And B of the Commission s and Regulations.

1.2 Description of EUT

EUT	: DOCSIS Cable Modem
Applicant	: TURBOCOMM TECH. INC. . 4F-2, No.171, Sung-Tech Road, Taipei ,Taiwan
Manufacturer	: CASTLENET TECHNOLOGY INC. No.130, Wu-Kung Rd., Wu-Ku Hsiang Taipei Hsien ,Taiwan
Model No	: DAZ8801F Series / ECM100 Series (See Appendix II)
FCC ID	: N7ZECM100
Power Type	: Powered by AC Adaptor (12V DC/1 Amp)
Ethernet Cable	: RJ-45 x1 (Nonshielded, 6' long ,Plastic hoods)

During testing the EUT was operated at Tx or Rx mode for each emission measured(P.S Run "Ping (IP Address) –T –L 1000" comment in Dos Mode). This was done in order to ensure that maximum emission levels were attained.

1.2 Model Difference

1.2.1 A shell of plastic is different.

1.2.1 A setting way of a screw is different.

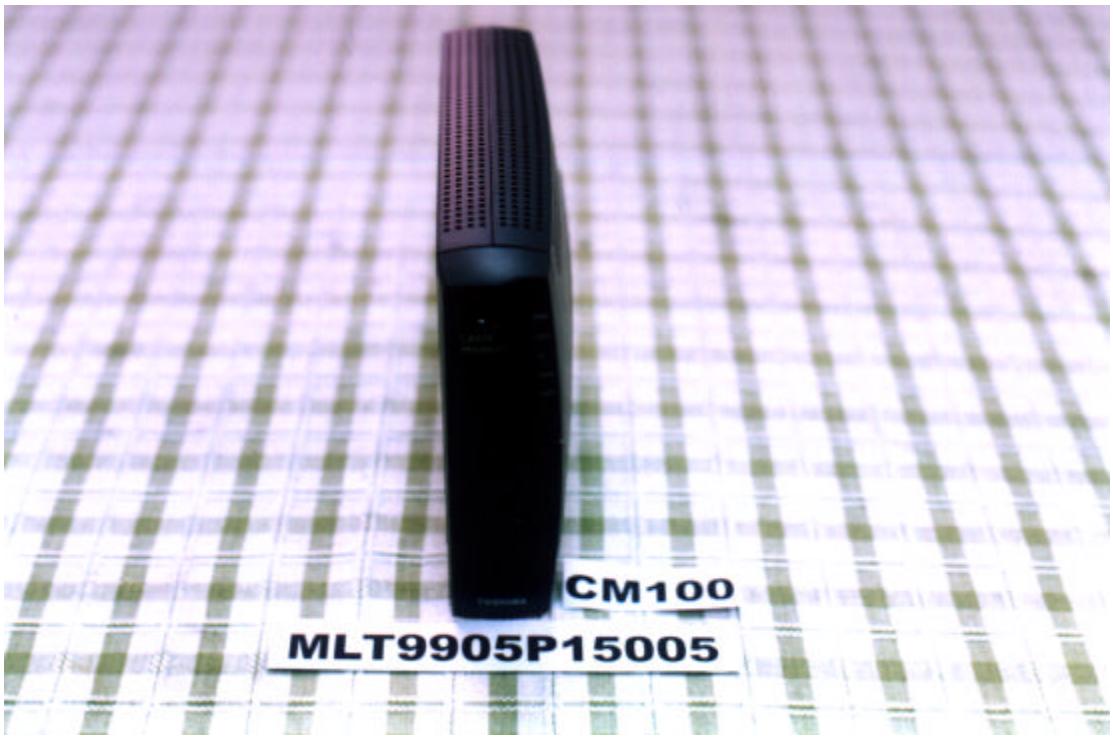

DAZ8801F Series

CM100 Series

1.3 Description of Support Equipment

In order to construct the minimum system which required by the ANSI C63.4-1991, following equipments were used as the support units.

Computer	**: COMPAQ**
Model No.	**: 3284**
Serial No.	**: L708BKTB4154**
FCC ID	**: EJH3284**
Keyboard	**: COMPAQ**
Model No.	**: KPQ-E99ZC-13**
Serial No.	**: 237743-334**
FCC ID	**: CMYKPQ7285**
Monitor	**: COMPAQ**
Model No.	**: 303U**
Serial No.	**: 704AG19TG099**
FCC ID	**: BJMCM14UH**
Mouse	**: COMPAQ**
Model No.	**: 196694-301**
Serial No.	**: 1SH67CHE03360**
FCC ID	**: EMJMUSJJ**
Printer	**: PANASONIC**
Model No.	**: KX-P1080I**
Serial No.	**: 7CKAKE98933**
FCC ID	**: ACJ5Z6KX-P10801**
Cable Head End	**: Cisco**
Model No.	**: Ubr7246**
Serial No.	**: N/A**

Ethernet Card	**: DELTA**
Model No.	**: NE2000 Ethernet Adapter**
Serial No.	**: 4712544**

Modem	**: Askey (External Fax / Data Modem)**
Model No.	**: WS1414VE**
Serial No.	**: IAH-10811**
FCC ID	**: H8N1414VE**

1.4 Configuration of System Under Test

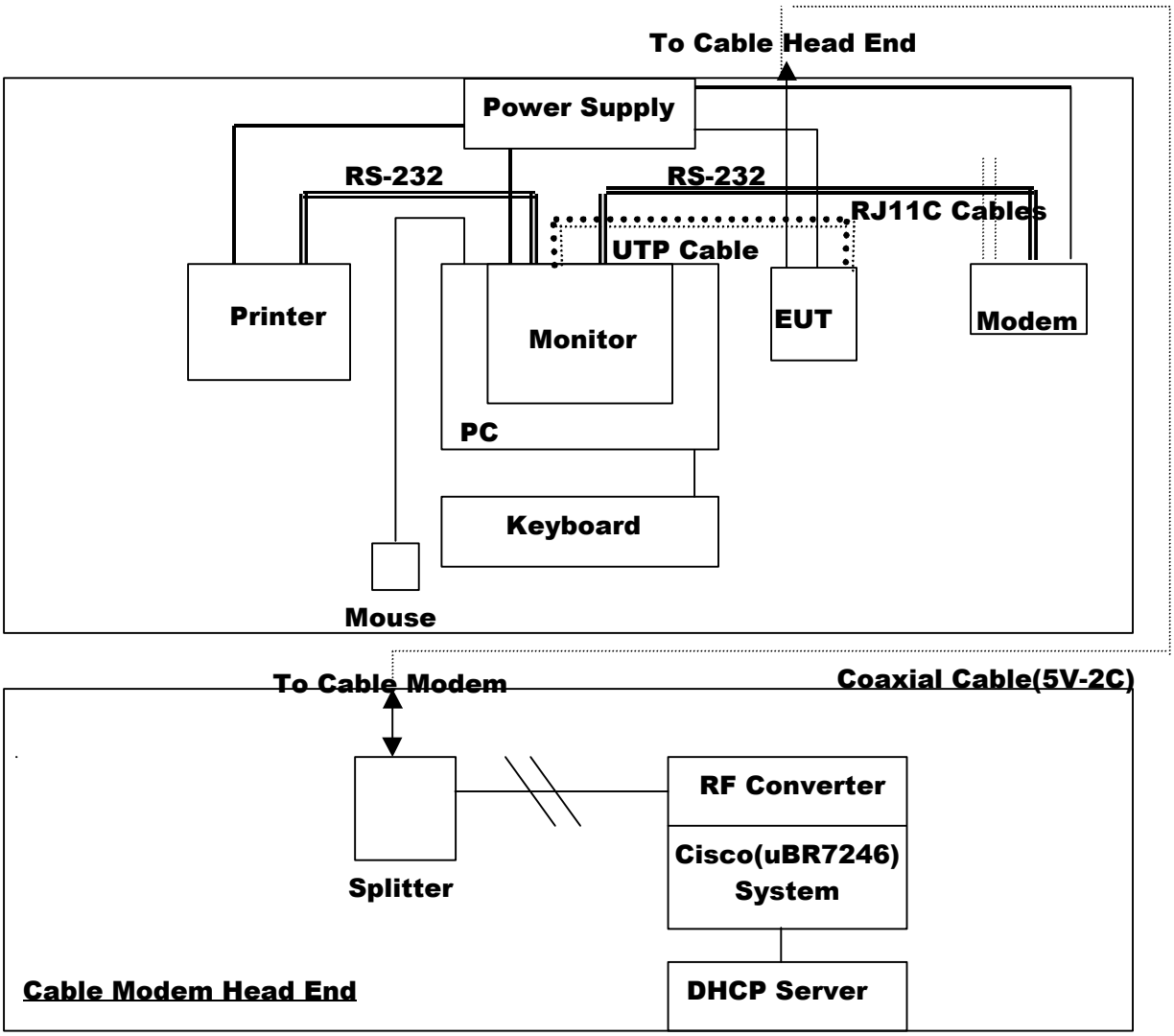

During testing the EUT(DOCSIS Cable Modem) was connected to the Ethernet card's RJ-45 port. So there is need for additional Ethernet Card(10BaseT). A mouse was connected to the mouse port and a printer was connected to the parallel port. A external modem connected the serial port and the external modem connected with two unterminated telephone cables on the line and phone jack. A coaxial cable(5C-2V) was connected to the F connector of EUT and the coaxial cable(5C-2V) was connected to a simulator of cable modem head end .

Cable Modem Head End

1.5 Test Procedure

All measurements contained in this report were performed according to the techniques described in Measurement procedure ANSI C63.4-1992 "Measurement of unIntentional Radiators."

1.6 General Test Condition

The conditions under which the EUT operates were varied to determine their effect on the equipment's emission characteristics. The final configuration of the test system and the mode of operation used during these tests was chosen as that which produced the highest emission levels. However, only those conditions which the EUT was considered likely to encounter in normal use were investigated. The system's radiated and conducted emissions were investigated while the computer alternately transferred data to the EUT (1000 bytes). Run "Ping (IP Address -T –L 1000)" comment which sent a continuous stream of 1000 Bytes data to EUT and transferred data to and from the EUT was proven to worst case emissions. The system's physical layout and cabling was randomly arranged to ensure that maximum emission levels were attained.

II. Conducted Emissions Requirements

2.1 General & Setup :

The power line conducted emission measurements were performed in a shielded enclosure. The EUT was assembled on a wooden table which is 80 centimeters high, was placed 40 centimeters from the backwall and at least 1 meter from the sidewall.

Power was fed to the EUT from the public utility power grid through a line filter and EMCO Model 3825/2 Line Impedance Stabilization Networks (LISN). The LISN housing, measuring instrumentation case, ground plane, etc., were electrically bonded together at the same RF potential. The Spectrum analyzer was connected to the AC line through an isolation transformer. The 50-ohm output of the LISN was connected to the spectrum analyzer directly. Conducted emission levels were in the CISPER quasi-peak detection mode. The analyzer's 6 dB bandwidth was set to 9 KHz. No post-detector video filter was used.

The spectrum was scanned from 450 KHz to 30 MHz. The physical arrangement of the test system and associated cabling was varied (within the scope of arrangements likely to be encountered in actual use) to determine the effect on the unit's emanations in amplitude and frequency. All spurious emission frequencies were observed. The highest emission amplitudes relative to the appropriate limit were measured and have been recorded in paragraph 2.6.

2.2 Test Equipment List:

A. **EMCO 3825/2 LISN (S/N:2654)**
B. **EMCO 3825/2 LISN (S/N:2658)**
C. **HP 8591EM 9KHZ-1.8GHz Spectrum Analyzer (S/N:73412A00110)**
D. **Shielded Room (MLT-SR1)**

2.3 Test Configuration:

2.3.1 Test Configuration(DAZ8801F Series):

Front View of The Test Configuration
(DAZ8801F Series)

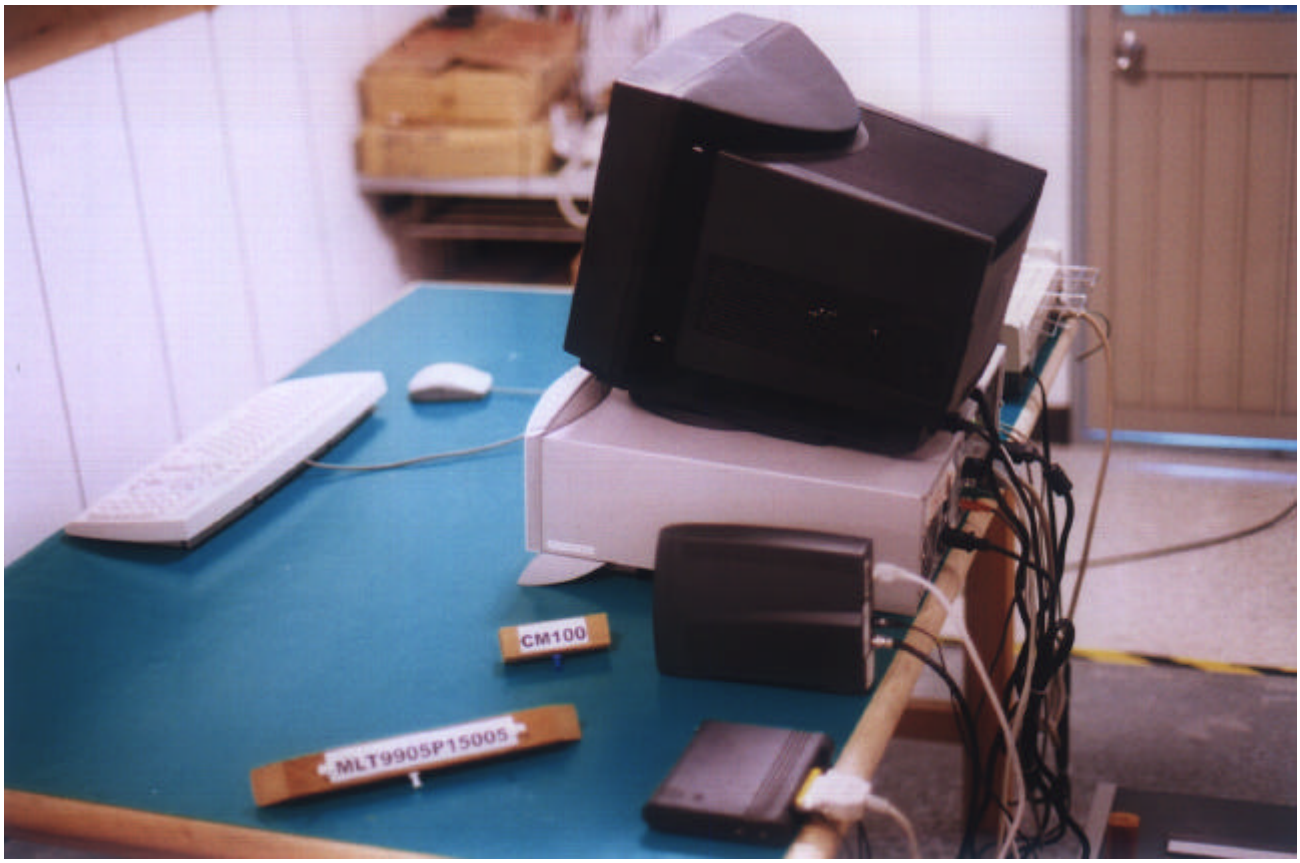

Rear View of The Test Configuration
(DAZ8801F Series)

2.3.2 Test Configuration(ECM100 Series):

Front View of The Test Configuration
(ECM100 Series)

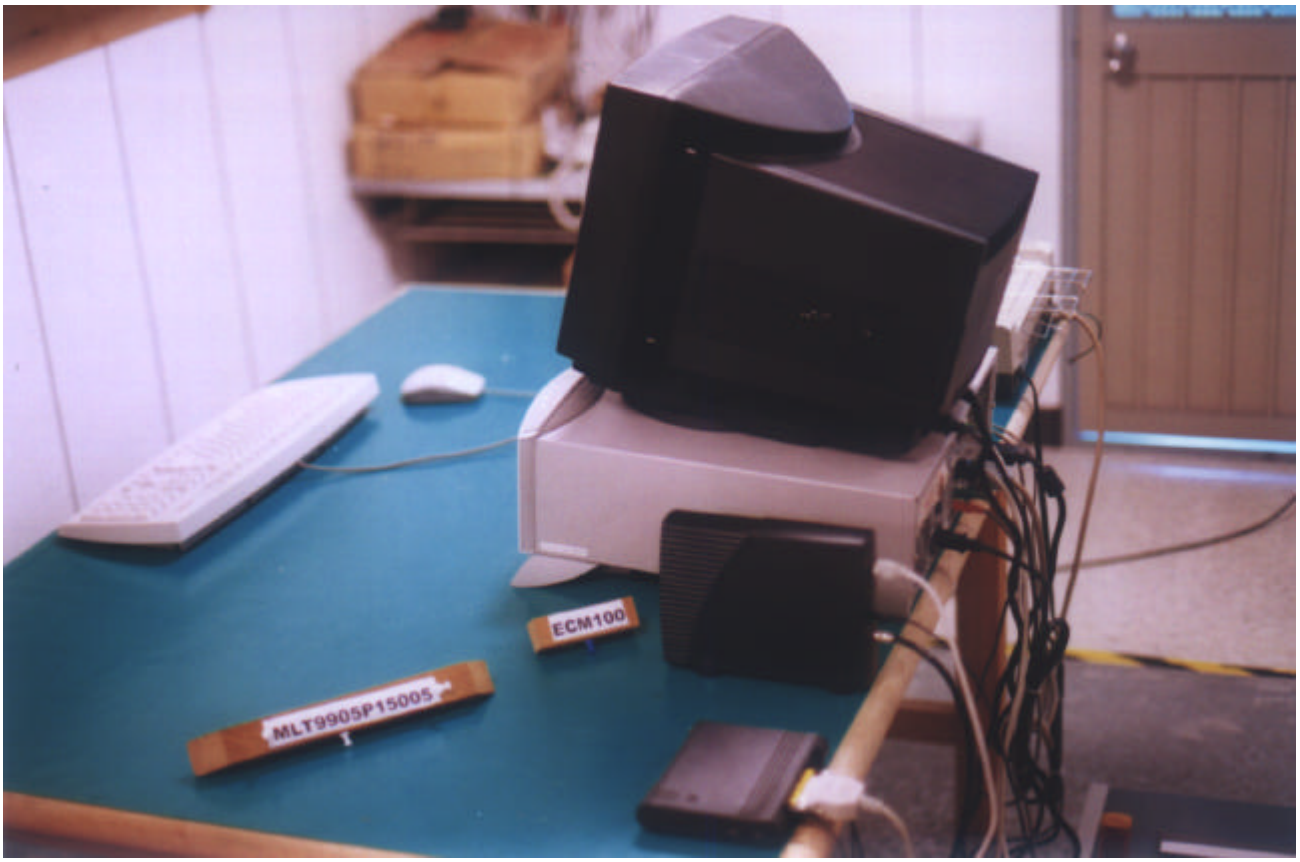

Rear View of The Test Configuration
(ECM100 Series)

2.4 Test condition:

EUT tested in accordance with the specifications given by the manufacturer , and exercised in the most unfavorable manner.

2.5 Conducted Emissions Limits:

Frequency range (MHz)	Limits (dBuV)
0.45 to 30	47.9

2.6 Measurement Data Of Conducted Emissions:

2.6.1 Measurement Data(DAZ8801F Series):

The following table show a summary of the highest emissions of power line conducted emissions to the HOT and NATURAL conductor of the EUT power.

Manufacturer : TURBOCOMM TECH. INC..
Model No : DAZ8801F Series (See Appendix II)
EUT : DOCSIS Cable Modem

Power Line Conducted Emissions (Class B)			
Conductor	**Frequency (MHz)**	**Peak Amplitude (dBuV)**	**Limits (dBuV)**
L1	0.45	31.45	47.9
	1.25	28.56	47.9
	2.54	32.67	47.9
	6.98	30.84	47.9
	12.75	32.63	47.9
	16.59	29.97	47.9
	24.73	28.14	47.9
L2	0.45	30.65	47.9
	1.25	27.45	47.9
	2.55	31.73	47.9
	6.98	31.39	47.9
	12.75	31.28	47.9
	16.59	30.56	47.9
	24.73	29.99	47.9

Notes : 1.*L1*: **One end & Ground L2: The other end & Ground**
2.**Height of table on which the EUT was placed : 0.8 m.**
3.**The above test results are obtained under the normal condition.**

2.6.2 Measurement Data(ECM100 Series):

The following table show a summary of the highest emissions of power line conducted emissions to the HOT and NATURAL conductor of the EUT power.

Manufacturer : TURBOCOMM TECH. INC..
Model No : ECM100 Series (See Appendix II)
EUT : DOCSIS Cable Modem

Power Line Conducted Emissions (Class B)			
Conductor	**Frequency (MHz)**	**Peak Amplitude (dBuV)**	**Limits (dBuV)**
L1	0.45	30.76	47.9
	1.23	29.12	47.9
	3.13	30.53	47.9
	7.12	31.03	47.9
	12.43	31.95	47.9
	19.74	30.23	47.9
	24.77	29.56	47.9
L2	0.45	30.33	47.9
	1.23	28.95	47.9
	3.13	31.12	47.9
	7.12	30.56	47.9
	12.43	30.02	47.9
	19.74	29.94	47.9
	24.77	30.12	47.9

Notes :
1. *L1*: **One end & Ground L2: The other end & Ground**
2. **Height of table on which the EUT was placed : 0.8 m.**
3. **The above test results are obtained under the normal condition.**

III. Radiated Emissions Requirements

3.1 General & Setup :

Prior to open-field testing, the EUT was placed in a shielded enclosure and scanned at a close distance to determine its emission characteristics. The physical arrangement of the EUT was varied (within the scope of arrangements likely to be encountered in actual use) to determine the effect on the unit's emanations in amplitude, directivity, and frequency. The exact system configuration which produced the highest emissions was noted so it could be reproduced later during the open-field tests. This was done to ensure that the final measurements would demonstrate the worst-case interference potential of the EUT. Final radiation measurements were made on a three-meter, open-field test site. The EUT system was placed on a nonconductive turntable which is 0.8 meters height, top surface 1.0 x 1.5 meter. The spectrum was examined from 30 MHz to 1000 MHz using an Hewlett Packard 8591EM Spectrum Analyzer, EMCO Biconical Antenna (Model 3142) for 30-1000MHz. At each frequency, the EUT was rotated 360 degrees, and the antenna was raised and lowered from one to four meters to find the maximum emission levels. Measurements were taken using both horizontal and vertical antenna polarization. Appropriate preamplifiers were used for improving sensitivity and precautions were taken to avoid overloading or desensitizing the spectrum analyzer. No post-detector video filters were used in the test. The spectrum analyzer's 6 dB bandwidth was set to 120 KHz, and the analyzer was operated in the quasi-peak detection mode. The highest emission amplitudes relative to the appropriate limit were measured and recorded in paragraph 3.6.

3.2 Test Equipment List:

A. **HP 8591EM 9KHz-1.8GHz Spectrum Analyzer (S/N:73412A00230)**
B. **HP 8447D Pre Amplifier (S/N:2944A08954)**
C. **EMCO 3142 Biconilog Antenna (S/N:1184)**
D. **HP 8590A 10KHz-1.5GHz Spectrum Analyzer (S/N:5212A000211)**

3.3 Test Configuration:

3.3.1 Test Configuration(DAZ8801F Series):

Front View of The Test Configuration
(DAZ8801F Series)

Rear View of The Test Configuration
(DAZ8801F Series)

3.3.2 Test Configuration(ECM100 Series):

Front View of The Test Configuration
(ECM100 Series)

Rear View of The Test Configuration
(ECM100 Series)

3.4 Test condition:

EUT tested in accordance with the specifications given by the manufacturer , and exercised in the most unfavorable manner.

3.5 Radiated Emissions Limits:

Frequency range (MHz)	Peak(dBuV)
30 to 88	40
88 to 216	43.5
216 to 960	46
Above 960	54

3.6 Measurement Data Of Radiated Emissions:

3.6.1 Open Field Radiated Emissions (HORIZONTAL)

The highest peak values of radiated emissions from the EUT at various antenna heights, antenna polarization, EUT orientation , etc. are recorded on the following

Manufacturer : TURBOCOMM TECH. INC.
Model No : DAZ8801F Series (See Appendix II)
EUT : DOCSIS Cable Modem

Radiated Emissions (HORIZONTAL)					
Frequency (MHz)	Amplitude (dBuV/m)	Ant. (m)	Table (Degree)	Limits(Class B) (dBuV/m)	Margin (dB)
110.43	28.14	1.5	300	43.5	-15.36
125.05	31.87	1	360	43.5	-11.63
135.08	29.11	1.5	300	43.5	-14.39
150.08	31.54	1.5	360	43.5	-11.96
200.05	32.87	1	270	43.5	-10.63
225.03	37.76	1.5	300	46	-8.24
250.32	34.98	1	360	46	-11.02
270.74	32.18	2	360	46	-13.82
367.83	31.56	1	200	46	-14.44
375.10	34.19	1.5	90	46	-11.81
439.15	34.75	2.5	360	46	-11.25

Notes : 1. **Margin= Amplitude - Limits**
2. **Distance of Measurement : 3 Meter (30-1000MHz)**
3. **Height of table for EUT placed: 0.8 Meter.**
4. **ANT= Antenna height.**
5. **Amplitude= Reading Amplitude Amplifier gain+Cable loss +Antenna factor**
(Auto calculate in spectrum analyzer)

3.6.2 Open Field Radiated Emissions (VERTICAL)

The highest peak values of radiated emissions from the EUT at various antenna heights, antenna polarization, EUT orientation , etc. are recorded on the following.

Manufacturer : TURBOCOMM TECH. INC..
Model No : DAZ8801F Series (See Appendix II)
EUT : DOCSIS Cable Modem

Radiated Emissions (VERTICAL)					
Frequency (MHz)	Amplitude (dBuV/m)	Ant. (m)	Table (Degree)	Limits(Class B) (dBuV/m)	Margin (dB)
110.43	31.56	1.5	300	43.5	-11.94
125.05	29.66	1.5	360	43.5	-13.84
135.08	29.12	1	300	43.5	-14.38
150.08	34.56	1.5	360	43.5	-8.94
200.05	31.26	1.5	270	43.5	-12.24
225.03	30.53	1	360	46	-15.47
250.32	32.56	1	300	46	-13.44
270.74	31.53	1.5	360	46	-14.47
367.83	32.43	1	300	46	-13.57
375.10	31.86	1	360	46	-14.14
439.15	32.56	1	270	46	-13.44

Notes : 1. **Margin= Amplitude - Limits**
2. **Distance of Measurement : 3 Meter (30-1000MHz)**
3. **Height of table for EUT placed: 0.8 Meter.**
4. **ANT= Antenna height.**
5. **Amplitude= Reading Amplitude Amplifier gain+Cable loss +Antenna factor**
(Auto calculate in spectrum analyzer)

3.6.3 Open Field Radiated Emissions (HORIZONTAL)

The highest peak values of radiated emissions from the EUT at various antenna heights, antenna polarization, EUT orientation , etc. are recorded on the following

Manufacturer : TURBOCOMM TECH. INC.
Model No : ECM100 Series (See Appendix II)
EUT : DOCSIS Cable Modem

Radiated Emissions (HORIZONTAL)					
Frequency (MHz)	Amplitude (dBuV/m)	Ant. (m)	Table (Degree)	Limits(Class B) (dBuV/m)	Margin (dB)
110.42	31.91	1.5	300	43.5	-11.59
125.07	30.18	1	300	43.5	-13.32
135.18	30.02	1.5	360	43.5	-13.48
150.09	32.53	1	300	43.5	-10.97
200.13	32.76	1.5	270	43.5	-10.74
225.61	34.42	1	360	46	-11.58
250.33	36.17	1	360	46	-9.83
270.74	31.78	2,5	300	46	-14.22
367.83	32.56	1	200	46	-13.44
375.12	34.62	1.5	100	46	-11.38
439.18	33.99	2	360	46	-12.01

Notes : 1. **Margin= Amplitude - Limits**
2. **Distance of Measurement : 3 Meter (30-1000MHz)**
3. **Height of table for EUT placed: 0.8 Meter.**
4. **ANT= Antenna height.**
5. **Amplitude= Reading Amplitude Amplifier gain+Cable loss +Antenna factor**
(Auto calculate in spectrum analyzer)

3.6.4 Open Field Radiated Emissions (VERTICAL)

The highest peak values of radiated emissions from the EUT at various antenna heights, antenna polarization, EUT orientation , etc. are recorded on the following.

Manufacturer : TURBOCOMM TECH. INC..
Model No : ECM100 Series (See Appendix II)
EUT : DOCSIS Cable Modem

Radiated Emissions (VERTICAL)					
Frequency (MHz)	Amplitude (dBuV/m)	Ant. (m)	Table (Degree)	Limits(Class B) (dBuV/m)	Margin (dB)
110.42	33.51	1	300	43.5	-9.99
125.07	30.17	1.5	300	43.5	-13.33
135.18	30.77	1.5	270	43.5	-12.73
150.09	35.56	1	360	43.5	-7.94
200.13	30.56	1	300	43.5	-12.94
225.61	33.76	1.5	300	46	-12.24
250.33	35.67	1	360	46	-10.33
270.74	30.75	1.5	300	46	-15.25
367.83	33.87	1	360	46	-12.13
375.12	32.65	1.5	300	46	-13.35
439.18	33.93	1	270	46	-12.07

Notes : 1. **Margin= Amplitude - Limits**
2. **Distance of Measurement : 3 Meter (30-1000MHz)**
3. **Height of table for EUT placed: 0.8 Meter.**
4. **ANT= Antenna height.**
5. **Amplitude= Reading Amplitude Amplifier gain+Cable loss +Antenna factor**
(Auto calculate in spectrum analyzer)

Appendix I- EUT Test SETUP

MEASUREMENT OF POWER LINE CONDUCTED RFI VOLTAGE

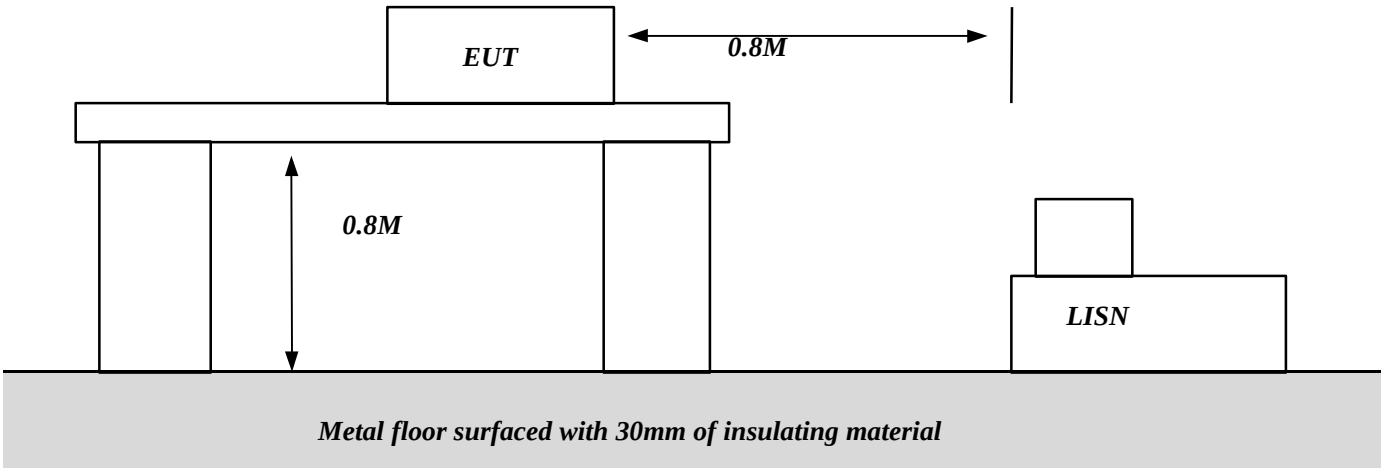

Appendix I- EUT Test SETUP

MEASUREMENT OF RADIATED EMISSION

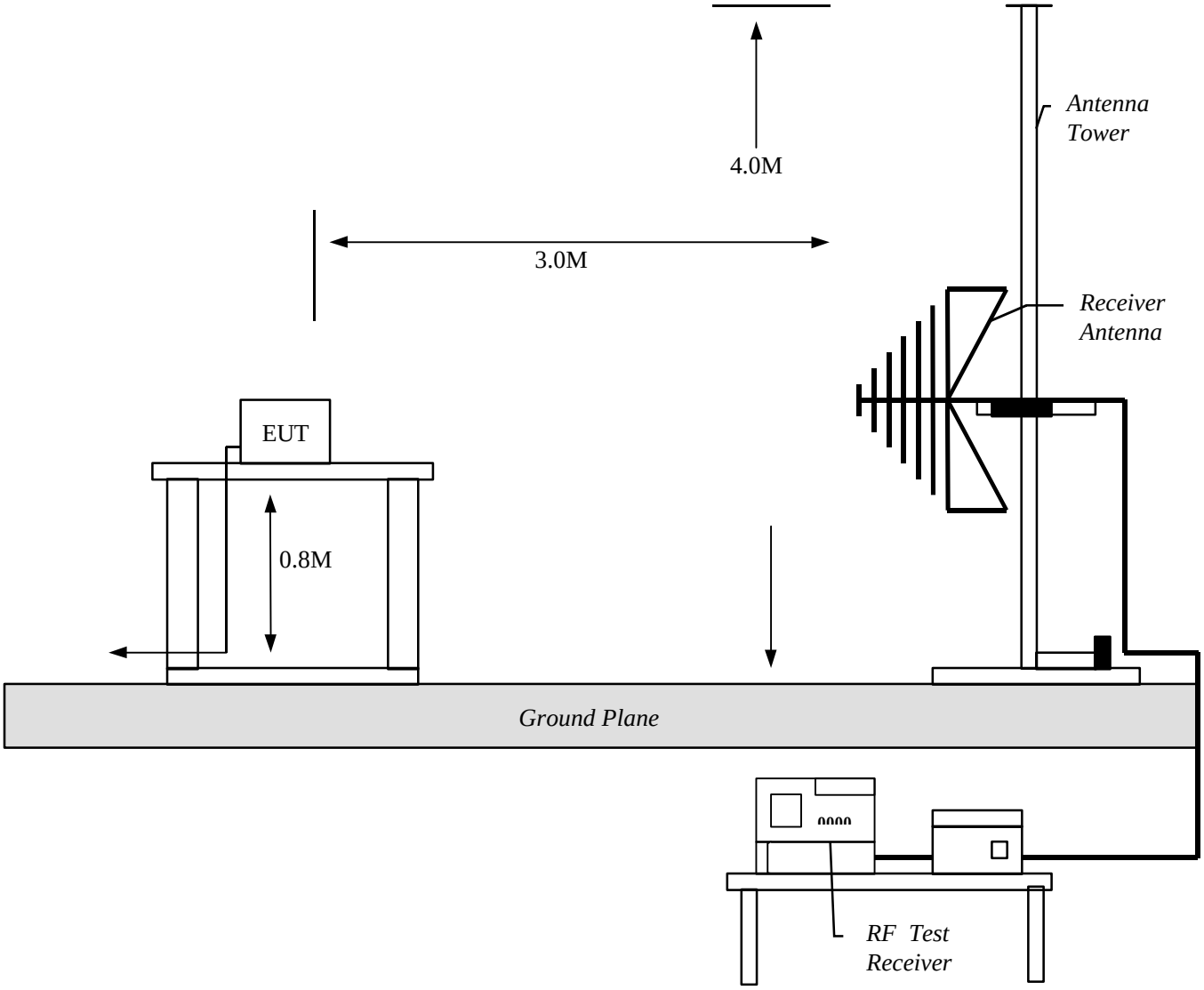

Appendix II- Model List

DAZ8801F Series

Trade Name	Model No.
TBC,Terayon,Sagem,Accton,Alcatel, Bosch,Doro, Kathrein,Eastern Multimedia Group,Gigamedia, Toshiba,REC,Turbocomm, Turbocom,Turbonet,Castletech, Castlenet,Hoshin,Compaq,IBM, Dell,Mitac,FIC,Tatung, Acer,Apple,PB(Packard Bell) HP,GW2000,NEC,Panasonic, Philips,Sony,Fujitsu,Hitachi, Seimens,Nokia,Genius	CM100 / CM2000 / CM2001 CM1000 / DA Z8801 / DAZ8801E DA Z8801F / DAZ8801G

ECM100 Series

Trade Name	Model No.
TBC,Terayon,Sagem,Accton,Alcatel, Bosch,Doro, Kathrein,Eastern Multimedia Group,Gigamedia, Toshiba,REC,Turbocomm, Turbocom,Turbonet,Castletech, Castlenet,Hoshin,Compaq,IBM, Dell,Mitac,FIC,Tatung, Acer,Apple,PB(Packard Bell) HP,GW2000,NEC,Panasonic, Philips,Sony,Fujitsu,Hitachi, Seimens,Nokia,Genius	ECM100 / ECM2000 / ECM2001 ECM1000 / DA Z8802 / DAZ88023E DA Z8802F/ DAZ8802G