Test Laboratory: Compliance Certification Services Inc.

D2450V2 SN-728 Body

DUT: Dipole 2450 MHz; Type: D2450V2; Serial: D2450V2 - SN:728

Communication System: CW2450; Frequency: 2450 MHz;Duty Cycle: 1:1
Medium parameters used: f = 2450 MHz; σ = 2.02 mho/m; ε_r = 51.3; ρ = 1000 kg/m^3
Phantom section: Flat Section
Air Temperature:25.3 deg C;Liquid Temperature:24.2 deg C
Area Scan Find Secondary Maximum Within 2dB and with a peak SAR value greater than 0.0012W/kg

DASY4 Configuration:

- Probe: EX3DV4 - SN3554; ConvF(6.12, 6.12, 6.12);
- Sensor-Surface: 4mm (Mechanical Surface Detection)Sensor-Surface: 0mm (Fix Surface)
- Electronics: DAE3 Sn427; Calibrated: 9/22/2005
- Phantom: SAM 12; Type: SAM V4.0; Serial: TP-1150
- Measurement SW: DASY4, V4.6 Build 23; Postprocessing SW: SEMCAD, V1.8 Build 161

Pin=250mW,d=10mm/Area Scan (6x6x1): Measurement grid: dx=15mm, dy=15mm

Maximum value of SAR (measured) = 11.7 mW/g

Pin=250mW,d=10mm/Zoom Scan (5x5x7)/Cube 0: Measurement grid: dx=7.5mm, dy=7.5mm, dz=5mm

Reference Value = 87.2 V/m; Power Drift = -0.128 dB
Peak SAR (extrapolated) = 28.0 W/kg
SAR(1 g) = 13.7 mW/g; SAR(10 g) = 6.33 mW/g
Maximum value of SAR (measured) = 15.4 mW/g

Pin=250mW,d=10mm/Z Scan (1x1x21): Measurement grid: dx=20mm, dy=20mm, dz=5mm

Maximum value of SAR (measured) = 15.3 mW/g

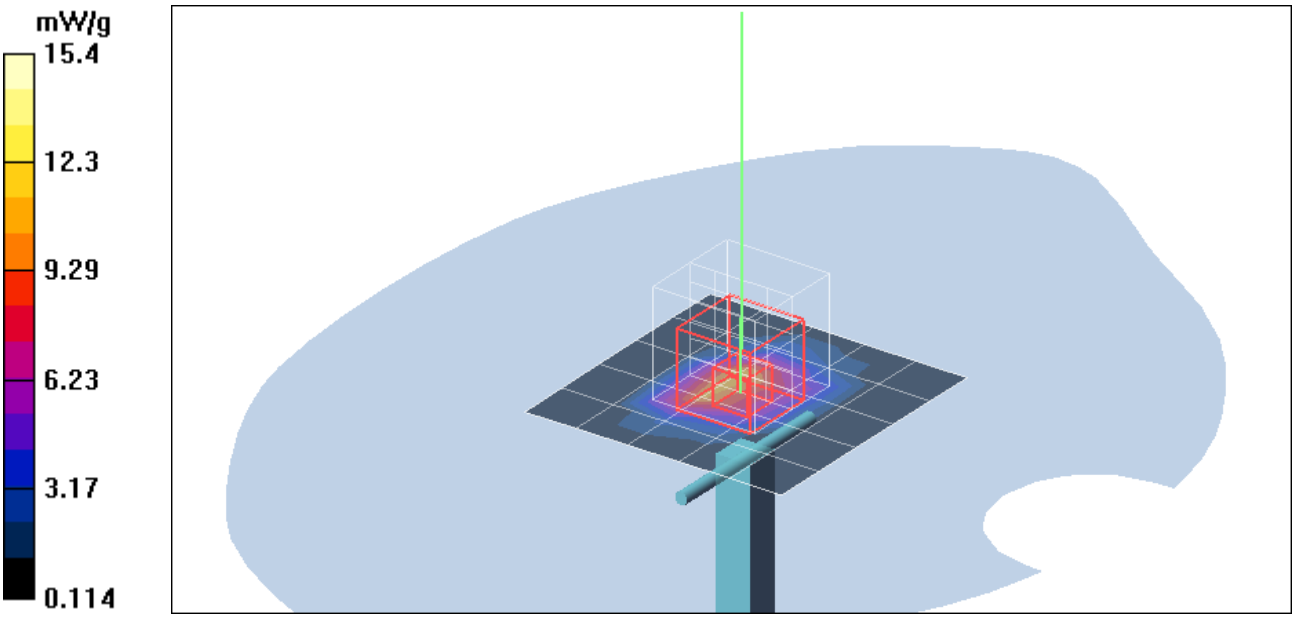
mW/g
15.4
12.3
9.29
6.23
3.17
0.114

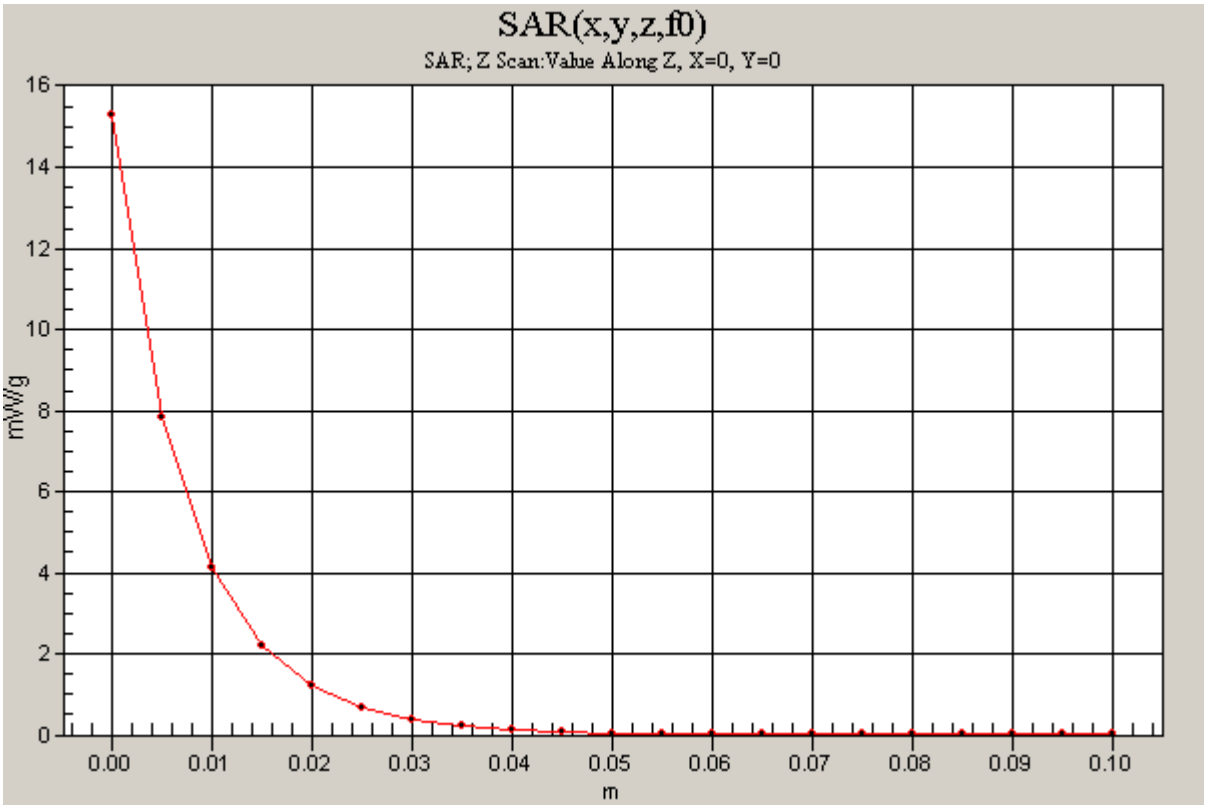
SAR(x,y,z,f0)
SAR; Z Scan:Value Along Z, X=0, Y=0
mW/g
m
0
2
4
6
8
10
12
14
16
0.00
0.01
0.02
0.03
0.04
0.05
0.06
0.07
0.08
0.09
0.10

Test Laboratory: The name of your organization

D2450V2 SN-728 Body

DUT: Dipole 2450 MHz; Type: D2450V2; Serial: D2450V2 - SN:728

Communication System: CW2450; Frequency: 2450 MHz;Duty Cycle: 1:1
Medium parameters used: f = 2450 MHz; σ = 1.91 mho/m; ε_r = 51.7; ρ = 1000 kg/m^3
Phantom section: Flat Section
Air Temperature:25.3 deg C;Liquid Temperature:24.3 deg C
Area Scan Find Secondary Maximum Within 2dB and with a peak SAR value greater than 0.0012W/kg

DASY4 Configuration:

- Probe: EX3DV4 - SN3554; ConvF(6.12, 6.12, 6.12);
- Sensor-Surface: 4mm (Mechanical Surface Detection)Sensor-Surface: 0mm (Fix Surface)
- Electronics: DAE3 Sn427; Calibrated: 9/22/2005
- Phantom: SAM 12; Type: SAM V4.0; Serial: TP-1150
- Measurement SW: DASY4, V4.6 Build 23; Postprocessing SW: SEMCAD, V1.8 Build 161

Pin=250mW,d=10mm/Area Scan (6x6x1): Measurement grid: dx=15mm, dy=15mm

Maximum value of SAR (measured) = 9.90 mW/g

Pin=250mW,d=10mm/Zoom Scan (5x5x7)/Cube 0: Measurement grid: dx=7.5mm, dy=7.5mm, dz=5mm

Reference Value = 88.2 V/m; Power Drift = -0.087 dB
Peak SAR (extrapolated) = 32.6 W/kg
SAR(1 g) = 13.9 mW/g; SAR(10 g) = 6.08 mW/g
Maximum value of SAR (measured) = 15.5 mW/g

Pin=250mW,d=10mm/Z Scan (1x1x21): Measurement grid: dx=20mm, dy=20mm, dz=5mm

Maximum value of SAR (measured) = 15.6 mW/g

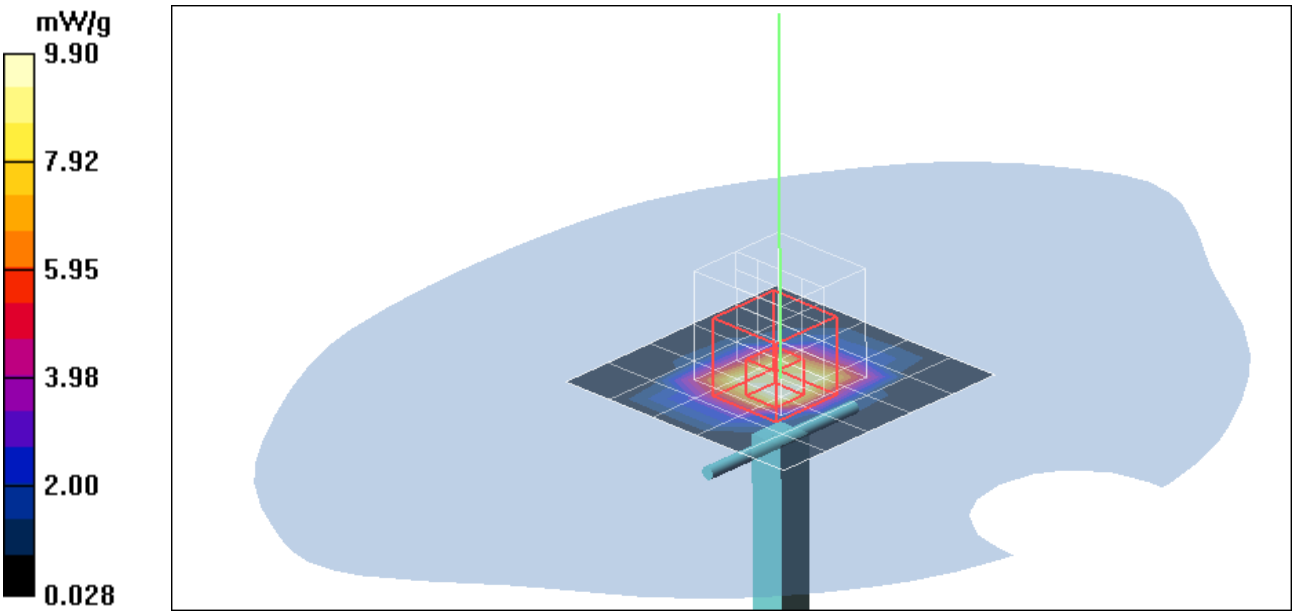
mW/g
9.90
7.92
5.95
3.98
2.00
0.028

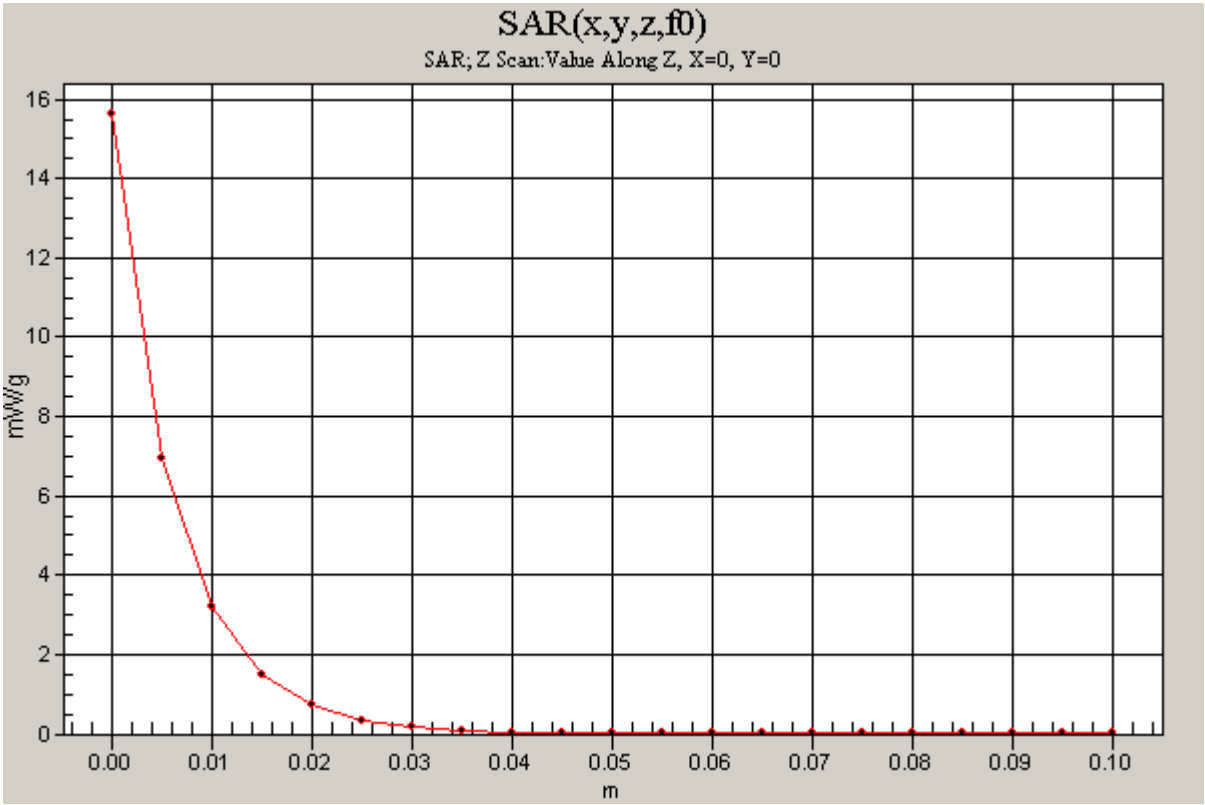
SAR(x,y,z,f0)
SAR; Z Scan:Value Along Z, X=0, Y=0
mW/g
16
14
12
10
8
6
4
2
0
0.00
0.01
0.02
0.03
0.04
0.05
0.06
0.07
0.08
0.09
0.10
m

Test Laboratory: Compliance Certification Services Inc.

802.11b Ant-A Bottom Touch mode

DUT: WE603-H; Type: 802.11g WLAN CardBus Adapter; Serial: N/A

Communication System: IEEE 802.11b WLAN; Frequency: 2437 MHz;Duty Cycle: 1:1
Medium parameters used (interpolated): f = 2437 MHz; σ = 2 mho/m; ε_r = 51.4; ρ = 1000 kg/m^3
Phantom section: Flat Section
Air Temperature:25.3 deg C;Liquid Temperature:24.2 deg C
Area Scan Find Secondary Maximum Within 2dB and with a peak SAR value greater than 0.0012W/kg

DASY4 Configuration:

- Probe: EX3DV4 - SN3554; ConvF(6.12, 6.12, 6.12);
- Sensor-Surface: 2.5mm (Mechanical Surface Detection)Sensor-Surface: 0mm (Fix Surface)
- Electronics: DAE3 Sn427; Calibrated: 9/22/2005
- Phantom: SAM 12; Type: SAM V4.0; Serial: TP-1150
- Measurement SW: DASY4, V4.6 Build 23; Postprocessing SW: SEMCAD, V1.8 Build 161

Middle CH, Rate=11M/Area Scan (6x11x1): Measurement grid: dx=15mm, dy=15mm

Maximum value of SAR (measured) = 0.191 mW/g

Middle CH, Rate=11M/Zoom Scan (5x5x7)/Cube 0: Measurement grid: dx=7.5mm, dy=7.5mm, dz=5mm

Reference Value = 6.47 V/m; Power Drift = -0.081 dB
Peak SAR (extrapolated) = 0.274 W/kg
SAR(1 g) = 0.145 mW/g; SAR(10 g) = 0.077 mW/g
Maximum value of SAR (measured) = 0.192 mW/g

Middle CH, Rate=11M/Z Scan (1x1x21): Measurement grid: dx=20mm, dy=20mm, dz=5mm

Maximum value of SAR (measured) = 0.183 mW/g

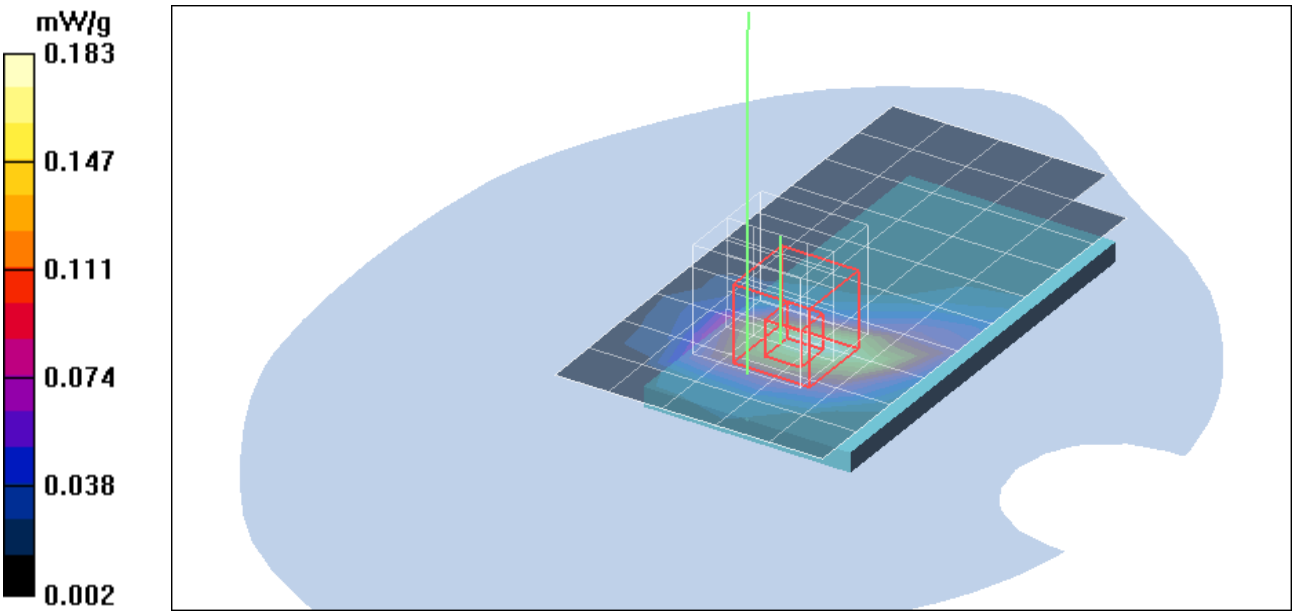
mW/g
0.183
0.147
0.111
0.074
0.038
0.002

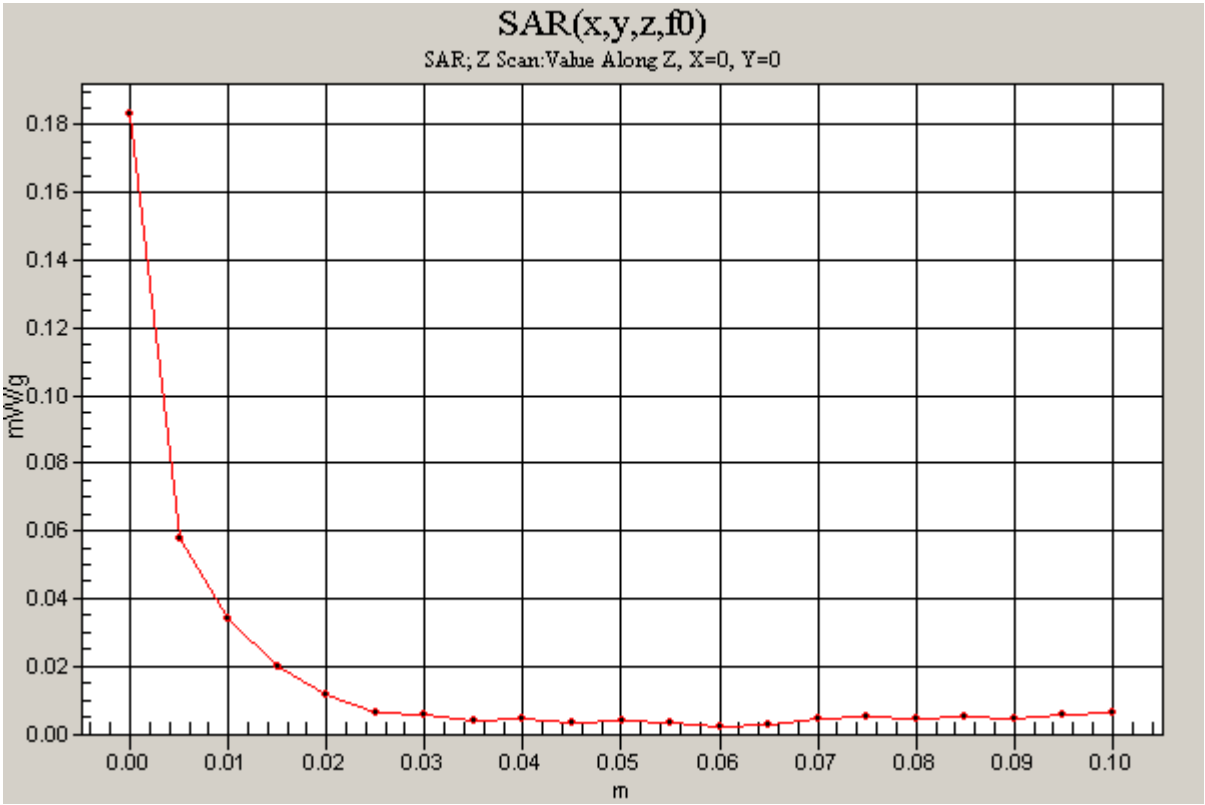
SAR(x,y,z,f0)
SAR; Z Scan:Value Along Z, X=0, Y=0
mW/g
0.18
0.16
0.14
0.12
0.10
0.08
0.06
0.04
0.02
0.00
0.00
0.01
0.02
0.03
0.04
0.05
0.06
0.07
0.08
0.09
0.10
m

Test Laboratory: Compliance Certification Services Inc.

802.11b Ant-B Bottom Touch mode

DUT: WE603-H; Type: 802.11g WLAN CardBus Adapter; Serial: N/A

Communication System: IEEE 802.11b WLAN; Frequency: 2437 MHz;Duty Cycle: 1:1
Medium parameters used (interpolated): f = 2437 MHz; σ = 2 mho/m; ε_r = 51.4; ρ = 1000 kg/m^3
Phantom section: Flat Section
Air Temperature:25.3 deg C;Liquid Temperature:24.2 deg C
Area Scan Find Secondary Maximum Within 2dB and with a peak SAR value greater than 0.0012W/kg

DASY4 Configuration:

- Probe: EX3DV4 - SN3554; ConvF(6.12, 6.12, 6.12);
- Sensor-Surface: 2.5mm (Mechanical Surface Detection)Sensor-Surface: 0mm (Fix Surface)
- Electronics: DAE3 Sn427; Calibrated: 9/22/2005
- Phantom: SAM 12; Type: SAM V4.0; Serial: TP-1150
- Measurement SW: DASY4, V4.6 Build 23; Postprocessing SW: SEMCAD, V1.8 Build 161

Middle CH, Rate=11M/Area Scan (8x11x1): Measurement grid: dx=15mm, dy=15mm

Maximum value of SAR (measured) = 0.186 mW/g

Middle CH, Rate=11M/Zoom Scan (5x5x7)/Cube 0: Measurement grid: dx=7.5mm, dy=7.5mm, dz=5mm

Reference Value = 4.05 V/m; Power Drift = -0.082 dB
Peak SAR (extrapolated) = 0.287 W/kg
SAR(1 g) = 0.141 mW/g; SAR(10 g) = 0.074 mW/g
Maximum value of SAR (measured) = 0.194 mW/g

Middle CH, Rate=11M/Z Scan (1x1x21): Measurement grid: dx=20mm, dy=20mm, dz=5mm

Maximum value of SAR (measured) = 0.102 mW/g

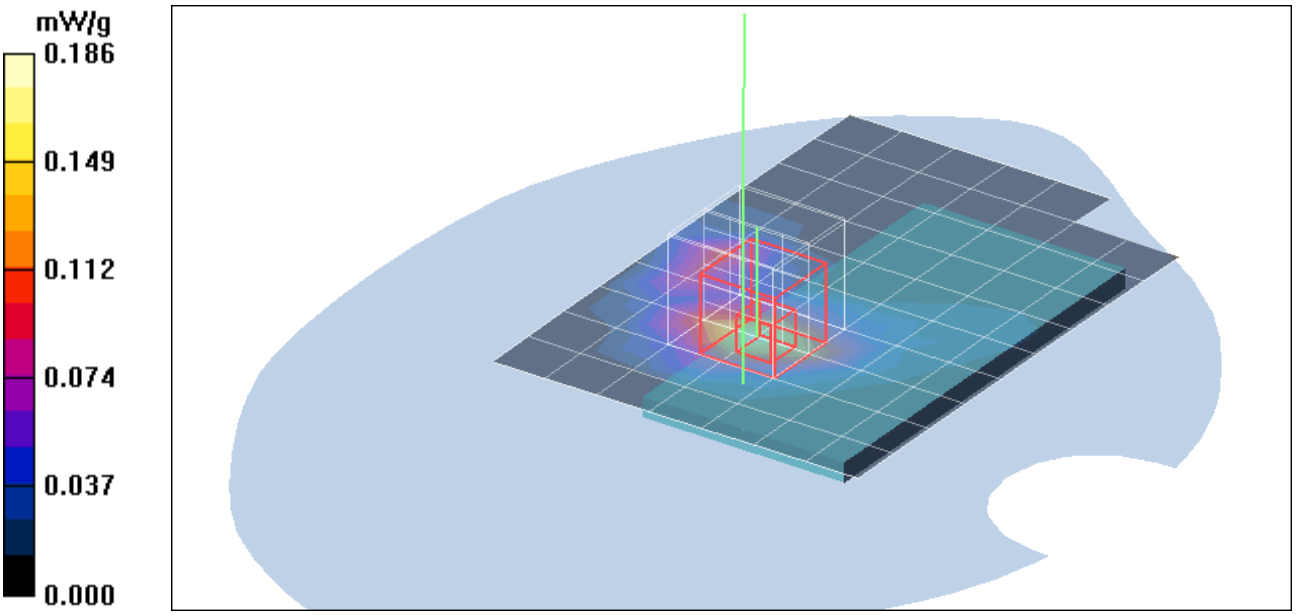
mW/g
0.186
0.149
0.112
0.074
0.037
0.000

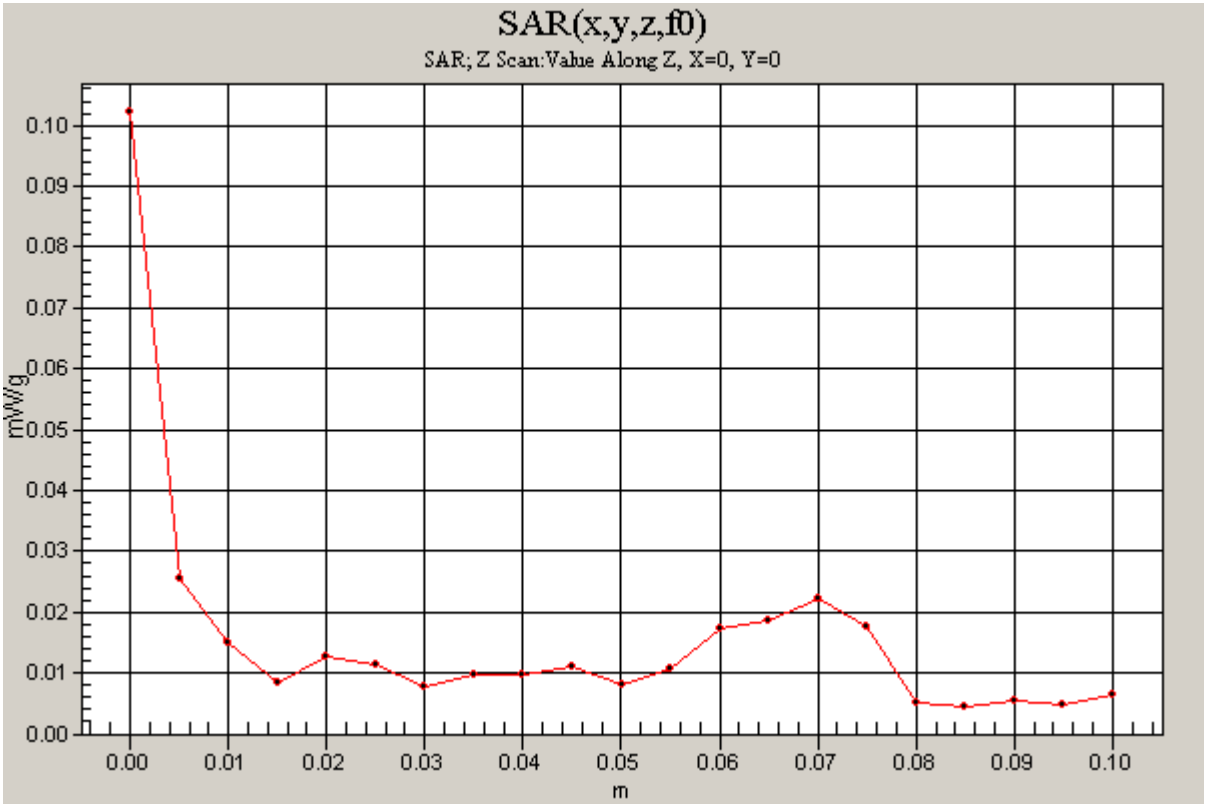
SAR(x,y,z,f0)
SAR; Z Scan:Value Along Z, X=0, Y=0
mW/g
0.10
0.09
0.08
0.07
0.06
0.05
0.04
0.03
0.02
0.01
0.00
0.00
0.01
0.02
0.03
0.04
0.05
0.06
0.07
0.08
0.09
0.10
m

Test Laboratory: Compliance Certification Services Inc.

802.11g Ant-A Bottom Touch mode

DUT: WE603-H; Type: 802.11g WLAN CardBus Adapter; Serial: N/A

Communication System: IEEE 802.11g WLAN; Frequency: 2437 MHz;Duty Cycle: 1:1
Medium parameters used (interpolated): f = 2437 MHz; σ = 2 mho/m; ε_r = 51.4; ρ = 1000 kg/m^3
Phantom section: Flat Section
Air Temperature:25.3 deg C;Liquid Temperature:24.2 deg C
Area Scan Find Secondary Maximum Within 2dB and with a peak SAR value greater than 0.0012W/kg

DASY4 Configuration:

- Probe: EX3DV4 - SN3554; ConvF(6.12, 6.12, 6.12);
- Sensor-Surface: 2.5mm (Mechanical Surface Detection)Sensor-Surface: 0mm (Fix Surface)
- Electronics: DAE3 Sn427; Calibrated: 9/22/2005
- Phantom: SAM 12; Type: SAM V4.0; Serial: TP-1150
- Measurement SW: DASY4, V4.6 Build 23; Postprocessing SW: SEMCAD, V1.8 Build 161

Middle CH, Rate=6M/Area Scan (6x11x1): Measurement grid: dx=15mm, dy=15mm

Maximum value of SAR (measured) = 0.163 mW/g

Middle CH, Rate=6M/Zoom Scan (5x5x7)/Cube 0: Measurement grid: dx=7.5mm, dy=7.5mm, dz=5mm

Reference Value = 5.23 V/m; Power Drift = -0.100 dB
Peak SAR (extrapolated) = 0.260 W/kg
SAR(1 g) = 0.131 mW/g; SAR(10 g) = 0.069 mW/g
Maximum value of SAR (measured) = 0.171 mW/g

Middle CH, Rate=6M/Z Scan (1x1x21): Measurement grid: dx=20mm, dy=20mm, dz=5mm

Maximum value of SAR (measured) = 0.123 mW/g

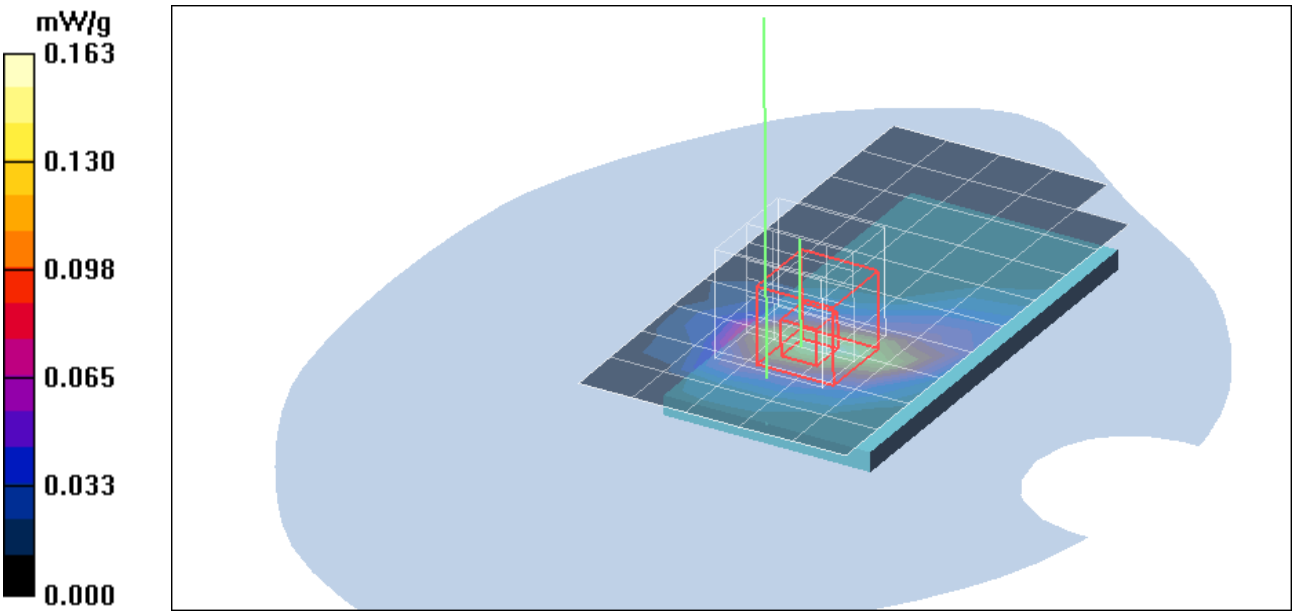
mW/g
0.163
0.130
0.098
0.065
0.033
0.000

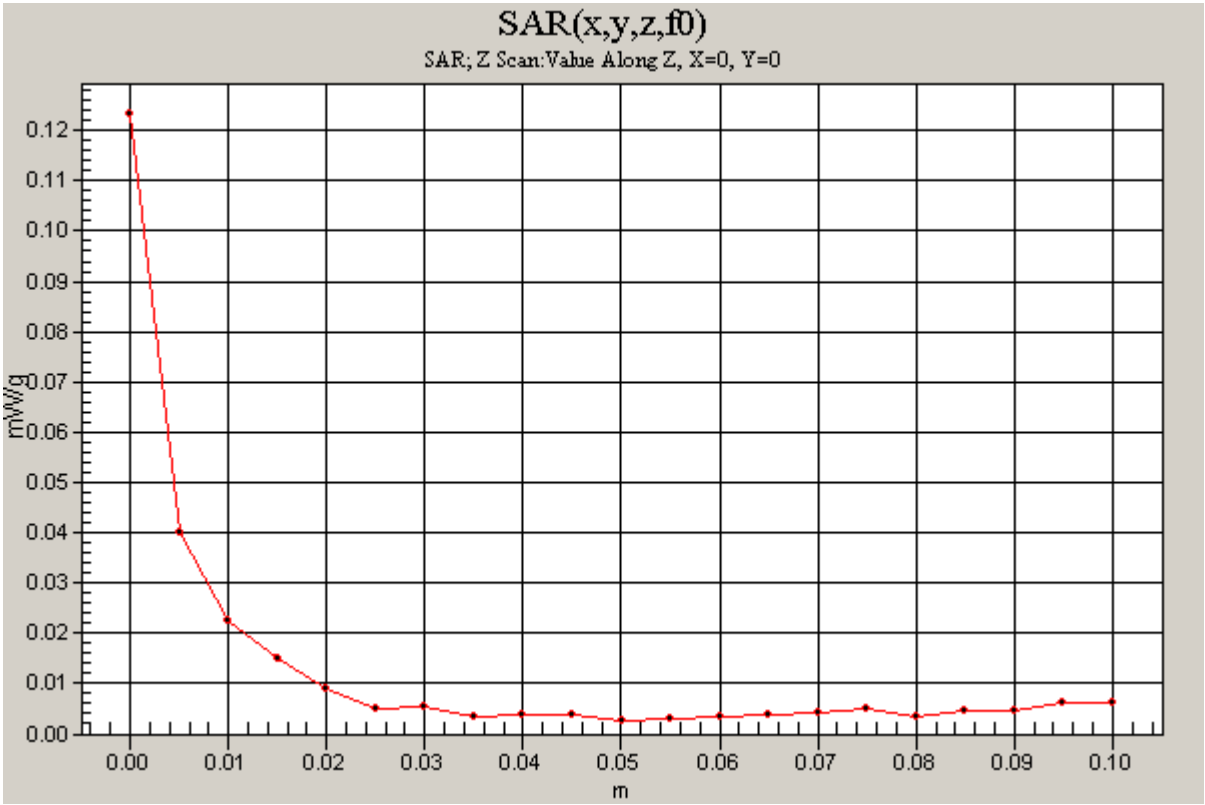
SAR(x,y,z,f0)
SAR; Z Scan:Value Along Z, X=0, Y=0
mW/g
0.12
0.11
0.10
0.09
0.08
0.07
0.06
0.05
0.04
0.03
0.02
0.01
0.00
0.00
0.01
0.02
0.03
0.04
0.05
0.06
0.07
0.08
0.09
0.10
m

Test Laboratory: The name of your organization

802.11b Ant-A Bottom Touch mode

DUT: WE603-H; Type: 802.11b/g Cardbus; Serial: N/A

Communication System: IEEE 802.11b WLAN; Frequency: 2437 MHz;Duty Cycle: 1:1
Medium parameters used (interpolated): f = 2437 MHz; σ = 1.88 mho/m; ε_r = 51.8; ρ = 1000 kg/m^3
Phantom section: Flat Section
Air Temperature:25.3 deg C;Liquid Temperature:24.3 deg C
Area Scan Find Secondary Maximum Within 2dB and with a peak SAR value greater than 0.0012W/kg

DASY4 Configuration:

- Probe: EX3DV4 - SN3554; ConvF(6.12, 6.12, 6.12);
- Sensor-Surface: 2.5mm (Mechanical Surface Detection)Sensor-Surface: 0mm (Fix Surface)
- Electronics: DAE3 Sn427; Calibrated: 9/22/2005
- Phantom: SAM 12; Type: SAM V4.0; Serial: TP-1150
- Measurement SW: DASY4, V4.6 Build 23; Postprocessing SW: SEMCAD, V1.8 Build 161

Middle CH, Rate=11M/Area Scan (6x11x1): Measurement grid: dx=15mm, dy=15mm

Maximum value of SAR (measured) = 0.180 mW/g

Middle CH, Rate=11M/Zoom Scan (5x5x7)/Cube 0: Measurement grid: dx=7.5mm, dy=7.5mm, dz=5mm

Reference Value = 6.22 V/m; Power Drift = -0.021 dB
Peak SAR (extrapolated) = 0.258 W/kg
SAR(1 g) = 0.136 mW/g; SAR(10 g) = 0.072 mW/g
Maximum value of SAR (measured) = 0.172 mW/g

Middle CH, Rate=11M/Z Scan (1x1x21): Measurement grid: dx=20mm, dy=20mm, dz=5mm

Maximum value of SAR (measured) = 0.172 mW/g

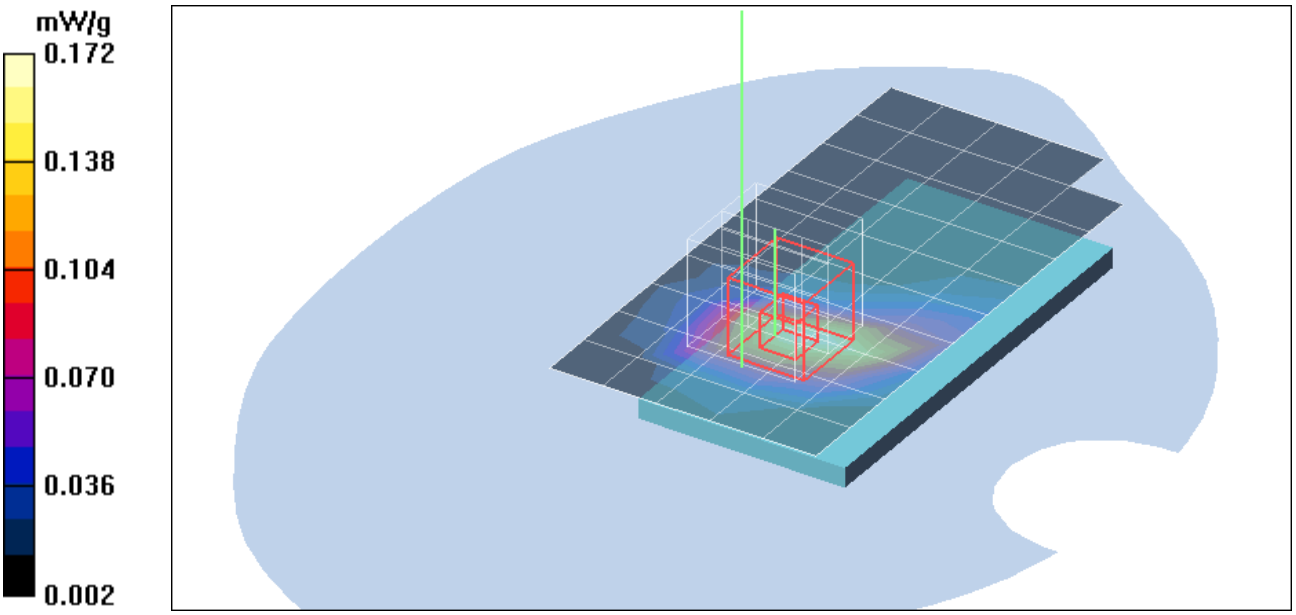
mW/g
0.172
0.138
0.104
0.070
0.036
0.002

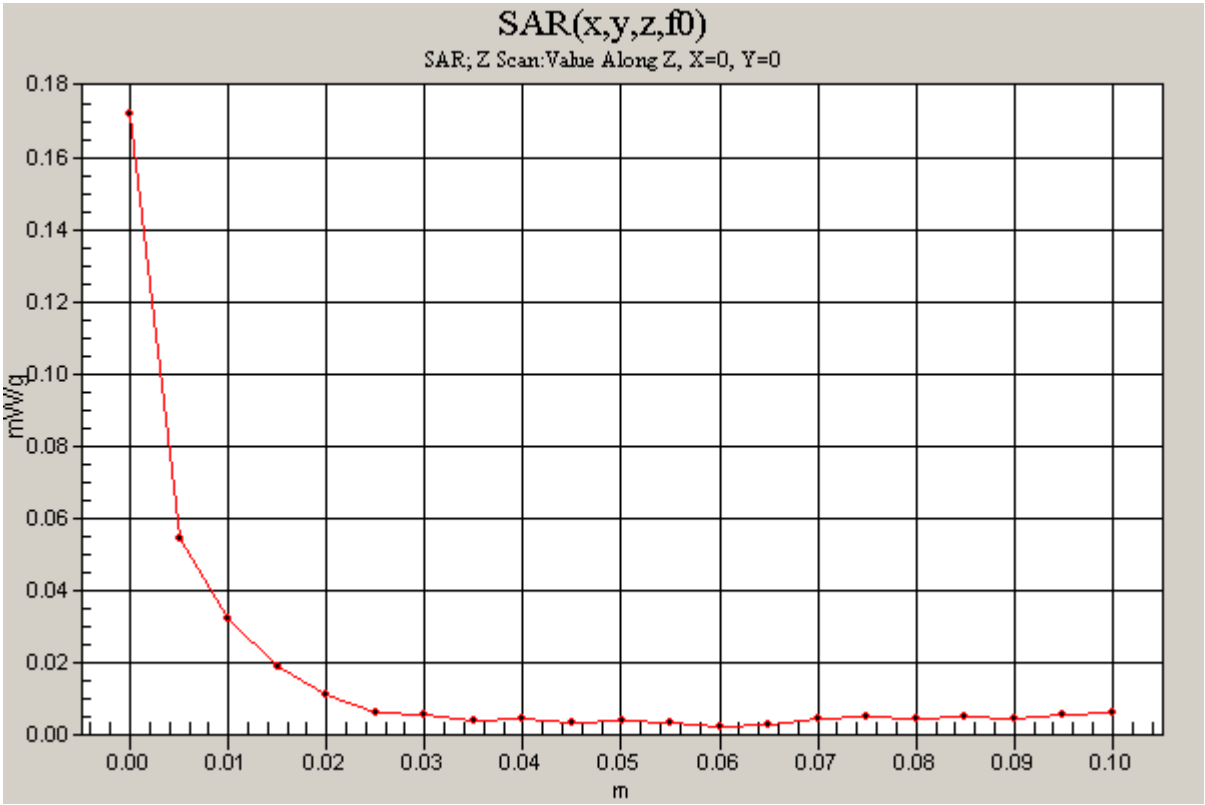
SAR(x,y,z,f0)
SAR; Z Scan:Value Along Z, X=0, Y=0
mW/g
0.18
0.16
0.14
0.12
0.10
0.08
0.06
0.04
0.02
0.00
0.00
0.01
0.02
0.03
0.04
0.05
0.06
0.07
0.08
0.09
0.10
m

Test Laboratory: The name of your organization

802.11g Ant-A Bottom Touch mode

DUT: WE603-H; Type: 802.11b/g Cardbus; Serial: N/A

Communication System: IEEE 802.11g WLAN; Frequency: 2437 MHz;Duty Cycle: 1:1
Medium parameters used (interpolated): f = 2437 MHz; σ = 1.88 mho/m; ε_r = 51.8; ρ = 1000 kg/m^3
Phantom section: Flat Section
Air Temperature:25.3 deg C;Liquid Temperature:24.3 deg C
Area Scan Find Secondary Maximum Within 2dB and with a peak SAR value greater than 0.0012W/kg

DASY4 Configuration:

- Probe: EX3DV4 - SN3554; ConvF(6.12, 6.12, 6.12);
- Sensor-Surface: 2.5mm (Mechanical Surface Detection)Sensor-Surface: 0mm (Fix Surface)
- Electronics: DAE3 Sn427; Calibrated: 9/22/2005
- Phantom: SAM 12; Type: SAM V4.0; Serial: TP-1150
- Measurement SW: DASY4, V4.6 Build 23; Postprocessing SW: SEMCAD, V1.8 Build 161

Middle CH, Rate=6M/Area Scan (6x11x1): Measurement grid: dx=15mm, dy=15mm

Maximum value of SAR (measured) = 0.153 mW/g

Middle CH, Rate=6M/Zoom Scan (5x5x7)/Cube 0: Measurement grid: dx=7.5mm, dy=7.5mm, dz=5mm

Reference Value = 5.02 V/m; Power Drift = -0.112 dB
Peak SAR (extrapolated) = 0.244 W/kg
SAR(1 g) = 0.123 mW/g; SAR(10 g) = 0.064 mW/g
Maximum value of SAR (measured) = 0.161 mW/g

Middle CH, Rate=6M/Z Scan (1x1x21): Measurement grid: dx=20mm, dy=20mm, dz=5mm

Maximum value of SAR (measured) = 0.116 mW/g

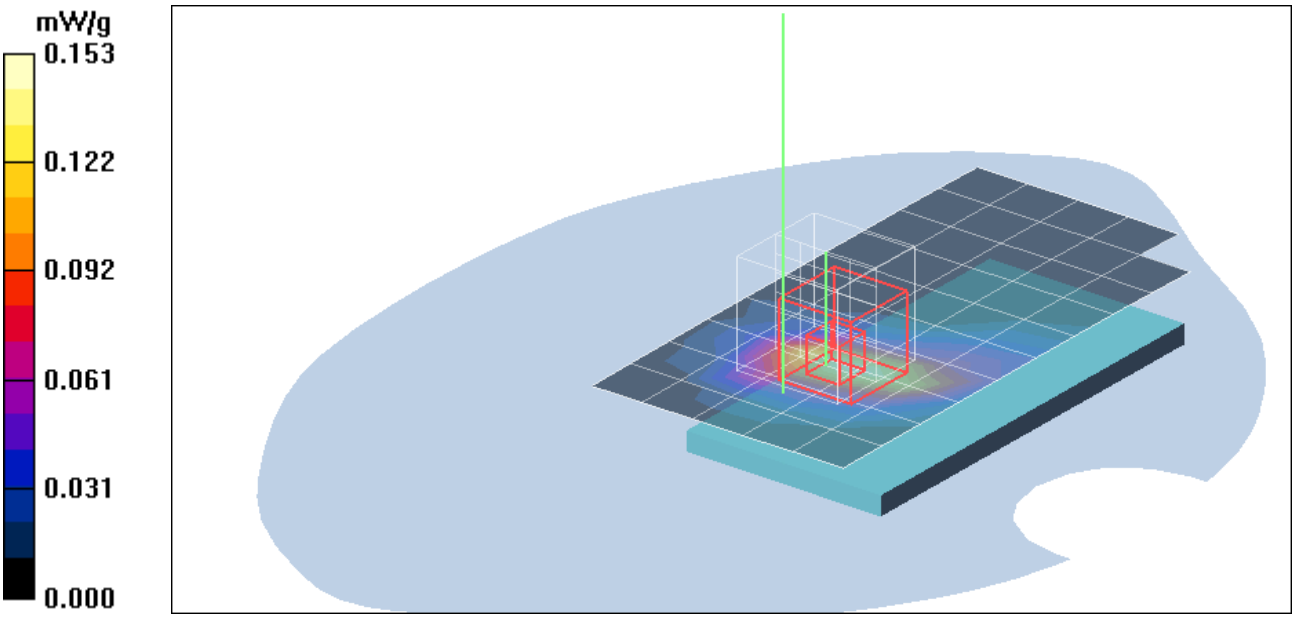
mW/g
0.153
0.122
0.092
0.061
0.031
0.000

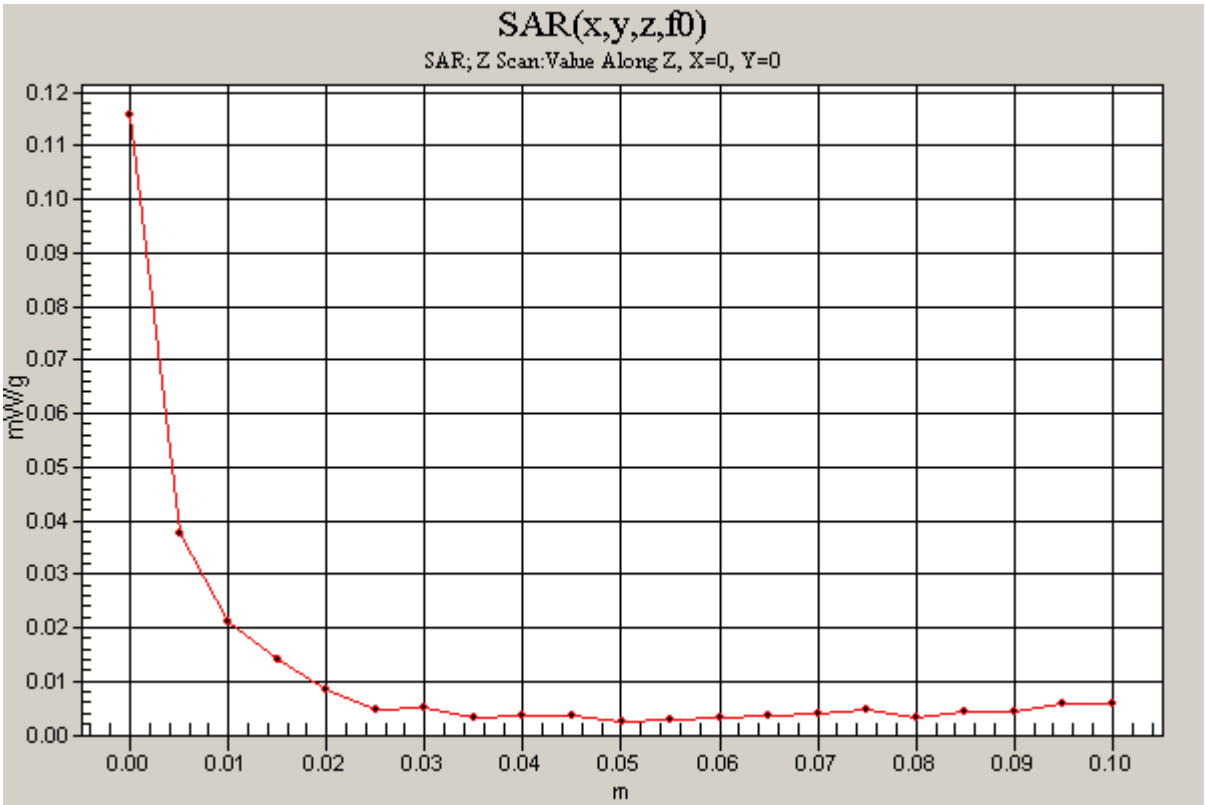
SAR(x,y,z,f0)
SAR; Z Scan:Value Along Z, X=0, Y=0
mW/g
0.12
0.11
0.10
0.09
0.08
0.07
0.06
0.05
0.04
0.03
0.02
0.01
0.00
0.00
0.01
0.02
0.03
0.04
0.05
0.06
0.07
0.08
0.09
0.10
m

Test Laboratory: The name of your organization

802.11b Ant-A Bottom Touch mode

DUT: WE603-H; Type: 802.11b/g Cardbus; Serial: N/A

Communication System: IEEE 802.11b WLAN; Frequency: 2437 MHz;Duty Cycle: 1:1
Medium parameters used (interpolated): f = 2437 MHz; σ = 1.88 mho/m; ε_r = 51.8; ρ = 1000 kg/m^3
Phantom section: Flat Section
Air Temperature:25.3 deg C;Liquid Temperature:24.3 deg C
Area Scan Find Secondary Maximum Within 2dB and with a peak SAR value greater than 0.0012W/kg

DASY4 Configuration:

- Probe: EX3DV4 - SN3554; ConvF(6.12, 6.12, 6.12);
- Sensor-Surface: 2.5mm (Mechanical Surface Detection)
- Electronics: DAE3 Sn427; Calibrated: 9/22/2005
- Phantom: SAM 12; Type: SAM V4.0; Serial: TP-1150
- Measurement SW: DASY4, V4.6 Build 23; Postprocessing SW: SEMCAD, V1.8 Build 161

Middle CH, Rate=11M/Area Scan (6x11x1): Measurement grid: dx=15mm, dy=15mm

Maximum value of SAR (measured) = 0.265 mW/g

Middle CH, Rate=11M/Zoom Scan (5x5x7)/Cube 0: Measurement grid: dx=7.5mm, dy=7.5mm, dz=5mm

Reference Value = 5.36 V/m; Power Drift = -0.054 dB
Peak SAR (extrapolated) = 0.490 W/kg
SAR(1 g) = 0.226 mW/g; SAR(10 g) = 0.105 mW/g
Maximum value of SAR (measured) = 0.326 mW/g

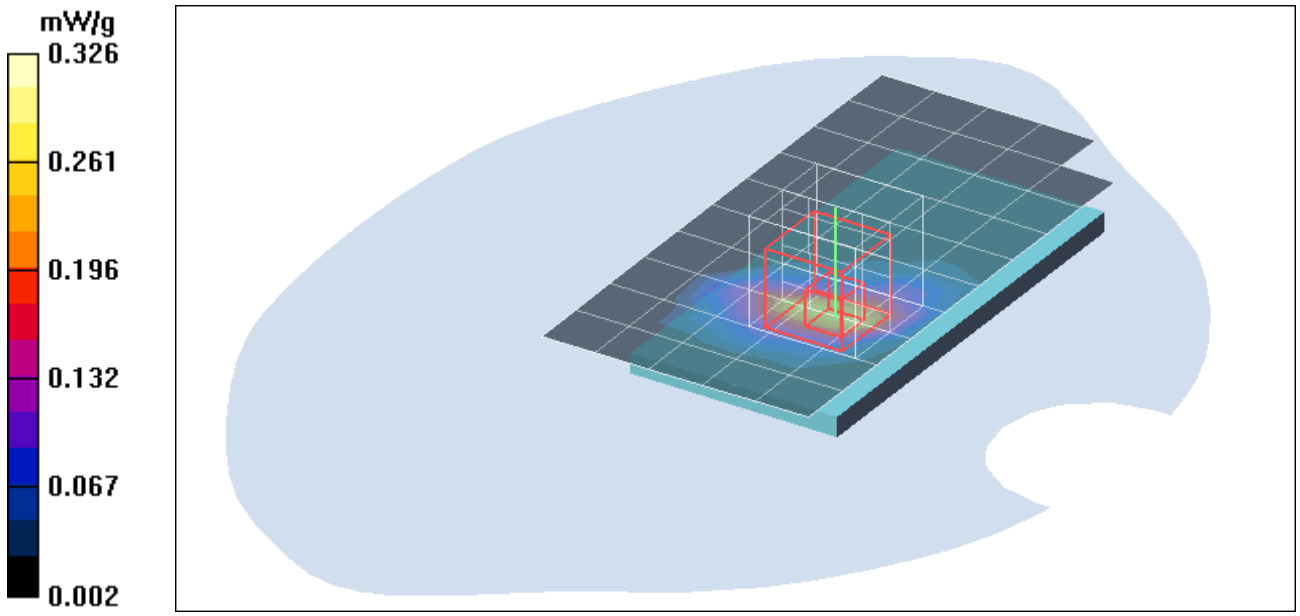

Test Laboratory: The name of your organization

802.11g Ant-A Bottom Touch mode

DUT: WE603-H; Type: 802.11b/g Cardbus; Serial: N/A

Communication System: IEEE 802.11g WLAN; Frequency: 2437 MHz;Duty Cycle: 1:1
Medium parameters used (interpolated): f = 2437 MHz; σ = 1.88 mho/m; ε_r = 51.8; ρ = 1000 kg/m^3
Phantom section: Flat Section
Air Temperature:25.3 deg C;Liquid Temperature:24.3 deg C
Area Scan Find Secondary Maximum Within 2dB and with a peak SAR value greater than 0.0012W/kg

DASY4 Configuration:

- Probe: EX3DV4 - SN3554; ConvF(6.12, 6.12, 6.12);
- Sensor-Surface: 2.5mm (Mechanical Surface Detection)Sensor-Surface: 0mm (Fix Surface)
- Electronics: DAE3 Sn427; Calibrated: 9/22/2005
- Phantom: SAM 12; Type: SAM V4.0; Serial: TP-1150
- Measurement SW: DASY4, V4.6 Build 23; Postprocessing SW: SEMCAD, V1.8 Build 161

Middle CH, Rate=6M/Area Scan (6x11x1): Measurement grid: dx=15mm, dy=15mm

Maximum value of SAR (measured) = 0.200 mW/g

Middle CH, Rate=6M/Zoom Scan (5x5x7)/Cube 0: Measurement grid: dx=7.5mm, dy=7.5mm, dz=5mm

Reference Value = 4.95 V/m; Power Drift = -0.122 dB
Peak SAR (extrapolated) = 0.347 W/kg
SAR(1 g) = 0.160 mW/g; SAR(10 g) = 0.077 mW/g
Maximum value of SAR (measured) = 0.234 mW/g

Middle CH, Rate=6M/Z Scan (1x1x21): Measurement grid: dx=20mm, dy=20mm, dz=5mm

Maximum value of SAR (measured) = 0.092 mW/g

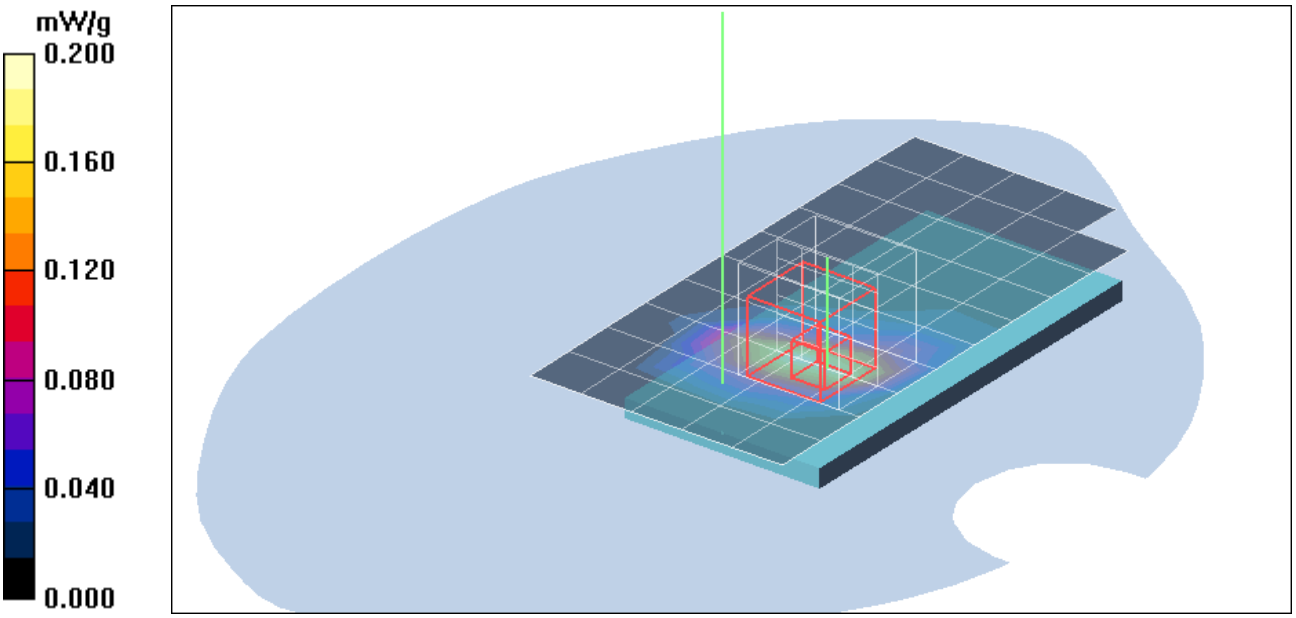
mW/g
0.200
0.160
0.120
0.080
0.040
0.000

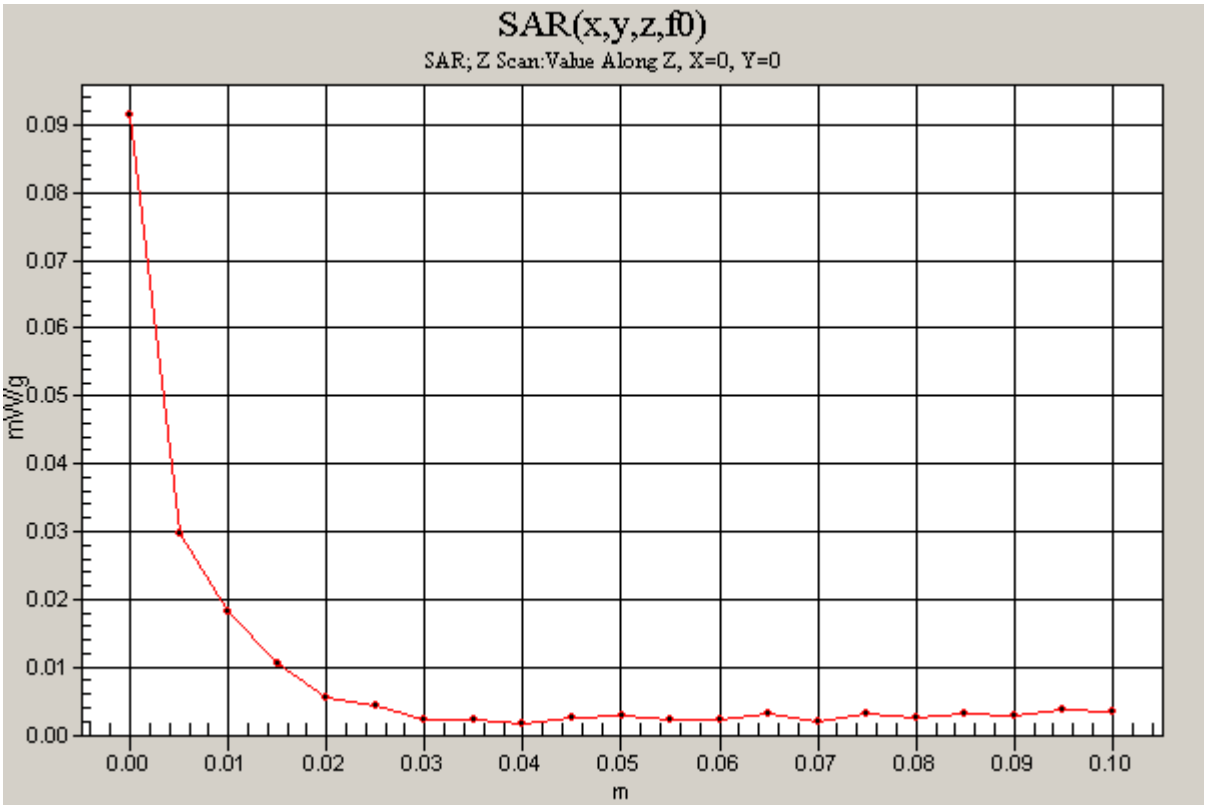
SAR(x,y,z,f0)
SAR; Z Scan:Value Along Z, X=0, Y=0
mW/g
0.09
0.08
0.07
0.06
0.05
0.04
0.03
0.02
0.01
0.00
0.00
0.01
0.02
0.03
0.04
0.05
0.06
0.07
0.08
0.09
0.10
m