E98 Series products

Product Specification

lierda®
利尔达科技集团

Product name：E98 BLE Module

Model：L-BTMEB98

Version：Rev01

File Rivision History

Serial number	Modify log	Modifier	Reviewer	File version	Modified date
01	Initial version	why	sxt	Rev01	2021-4-28

lierda®
利尔达科技集团

Catalog

CHAPTER 1 OVERVIEW 4

1.1 E98 MODULE FEATURES 4

1.2 APPLICATION 5

CHAPTER 2 SPECIFICATIONS 6

CHAPTER 3 HARDWARE LAYOUT AND INTERFACE DESCRIPTION 8

3.1 DIMENSIONAL DRAWING 8

3.2 DIMENSIONAL DRAWING 8

3.3 PCB PACKAGE 10

CHAPTER 4 APPLICATION NOTE 11

4.1 ANTENNA DESIGN GUIDE 11

4.2 BACKPLANE LAYOUT CONSIDERATIONS 12

4.4 PRECAUTIONS 13

CHAPTER 5 PRODUCTION GUIDANCE 14

5.1 PRODUCTION GUIDE 14

5.2 MODULE REQUIREMENTS FOR FLOOR POSITION 14

5.3 STEEL STENCIL DESIGN 15

5.4 REFLOW SOLDERING INSTRUCTIONS 16

CHAPTER 6 PRODUCT PACKAGING 17

6.1 PACKAGING METHOD 17

6.2 STRIP SIZE 17

6.3 PRODUCT DIRECTION 17

ADVISE THE USER 18

lierda 利尔达科技集团

Chapter 1 Overview

The E98 standard hardware module is a high-performance IoT Bluetooth transceiver based on the NORDIC Bluetooth SOC nRF52 series (supporting Bluetooth 5.1). The module uses a stamp-type interface; the package is compatible with the E92 module (Pin-to-Pin) and supports both external antennas and on-board antennas. The product has the characteristics of low power consumption, small size and strong anti-interference ability.

Based on the optimized Bluetooth SDK provided by Lierda, users can easily develop Bluetooth applications, shorten the development cycle, and help you seize market opportunities.

Table 1-1 Model Description

Model	Description
L-BTMEB98-G0NP4	nRF52833, external antenna and on-board antenna, this model does not include software. For software product, please confirm the model and MPQ information with the sales.

1.1 E98 module features

- Bluetooth 5.1
- ARM® Cortex®-M4 32-bit processor, 64 MHz
- 512 KB Flash + 128 KB RAM
- LE Mode：1 Mbps、2 Mbps、500Kbps、125Kbps
- Link Budget：104dB
- Receive sensitivity：-96dB
- Output power：MAX 8dBm
- RSSI accuracy：1dB
- Working voltage：2.5~3.6V
- Number of configurable GPIO ：17
- ADC accuracy：12bit / 200 ksps
- 50Ω RF port
- Programmable peripheral interface-PPI
- DC-DC work mode

1.2 Application

- 2.4GHz low power Bluetooth system;
- Low-power peripherals such as PC, tablet, mobile phone, and handset (HID, remote controler, etc.);
- Comsumer eletronics such as sport and health care;
- Wireless sensor networks such as smart metes and data acquisition;
- Intelligent cloud platform and ecologic access (WeChat, QQ IOT, Jingdong, Ali, Xiaomi, etc.);
- Smart home, LAN, interactive devices, beacon lights.

lierda®
利尔达科技集团

Chapter 2 Specifications

Table 2-1 Product limit parameters

The main parameters			Performance		Remarks
			Minimum	Maximum	
Power supply voltage(V)			-0.3	3.9	
IO voltage(V)			-0.3	VDD+0.3	Not more than 3.9
Maximum RF input power(dBm)			/	0	
Storage voltage(℃)			-40	+125	
Working temperature(℃)			-40	+85	
VESD	Electrostatic discharge(ESD) performance	Human Body Model(HBM),CLASS 2	/	4000V	
		Charged Device Model(CDM)	/	1000V	

Table 2-2 Module working temperature@25℃

The main parameters	Performance			Remarks
	Minimum	Typical	Maximum	
Working voltage(V)	2.5	3.0	3.6	Ripple requirements：peak to peak voltage < 30mV
Power supply rise time(ms)	/	/	60	Supply voltage should rise to 2.5V in 60ms
Working frequency(MHz)	2402	/	2480	
Payload length(bytes)	0	/	251	
Working mode	1 Mbps/2 Mbps/500Kbps/125Kbps			1Mbps by default
Communication protocol	Bluetooth 5.1			
Number of channels	40			
Modulation type	GFSK			
Communication	100m			@3.0V;8dBm; BLE mode1M ; PCB

distance[1]				antenna
Transmit power(dBm)	/	0	/	@3.0V ; Software configurable from -40dBm to +8dBm
Receive sensitivity(dBm)	/	-96	/	@BLE mode 1Mbps;Payload=37

lierda®
利尔达科技集团

Chapter 3 Hardware layout and interface description

3.1 Dimensional drawing

When designing this product, there are alternative material types for Secondary components and PCB. The appearance color may be different under the premise of Performance. The main material (main chip, crystal oscillator, etc.) has no replacement model, but changes will be notified in advance.

TBD

图 3-1 E98 series module outline drawing

* The dimensional tolerances not shown in the figure are in accordance with the GB/T1804-m standard.

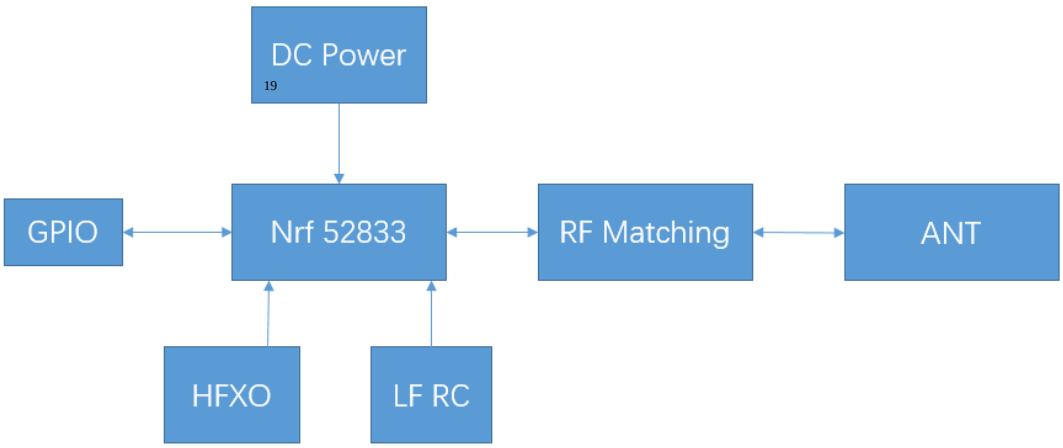

Picture 3-2 Internal block diagram of the E98 series module.

3.2 Dimensional drawing

Table 3-1 Module Pin Function Description

Module Pin	Chip Pin	Remarks
1	D+	NC
2	GND	Power Ground

3	D-	NC
4	P0.03/AIN1	Digital I/O Pin ;Analog I/O Pin
5	P0.02/AIN0	Digital I/O Pin ;Analog I/O Pin
6	P0.00/XL1	Digital I/O Pin ;
7	P0.01/XL2	Digital I/O Pin ;
8	P0.28/AIN4	Digital I/O Pin ;Analog I/O Pin
9	P0.29/AIN5	Digital I/O Pin ;Analog I/O Pin
10	VBAT	Power Supply
11	GND	Power Ground
12	RSTN	Reset Pin
13	SWDCLK	Debug Clock Pin
14	SWDIO	Debug Data Pin
15	P0.30/AIN6	Digital I/O Pin ;Analog I/O Pin
16	P0.31/AIN7	Digital I/O Pin ;Analog I/O Pin
17	P0.04/AIN2	Digital I/O Pin ;Analog I/O Pin
18	P0.05/AIN3	Digital I/O Pin ;Analog I/O Pin
19	P0.09/NFC1	Digital I/O Pin ;NFC input
20	P0.10/NFC2	Digital I/O Pin ;NFC input
21	P1.09	Digital I/O Pin ;
22	P0.11	Digital I/O Pin ;
23	P0.15	Digital I/O Pin ;
24	P0.17	Digital I/O Pin ;
25	P0.20	Digital I/O Pin ;
26	GND	Power Ground
27	ANT	External antenna interface; need to reserve π-type matching circuit when using

For detailed Pin descriptions, please refer to the nRF52833 chip data sheet.

Table 3-2 Module power consumption parameter @25℃

The main parameters	Performance			Remarks
	Minimum	Typical	Maximum	
Transmitter current(mA)	/	15.5	/	@3.0V(DCDC-Mode);8dBm
	/	30.4	/	@3.0V(LDO-Mode);8dBm
	/	6	/	@3.0V(DCDC-Mode);0dBm

	/	11	/	@3.0V(LDO-Mode);0dBm
Receiver current(mA)	/	6	/	@3.0V(DCDC-Mode);1Mbps
	/	10.5	/	@3.0V(LDO-Mode);1Mbps
Sleep current(uA)	/	0.6	/	System OFF , no RAM retention, wake on reset
	/	2.6	/	System ON, 128K RAM retention, wake on RTC

1. The CPU clock speed is 64 MHz, the peripheral is idle, and the power supply voltage is 3.0V.

3.3 PCB Package

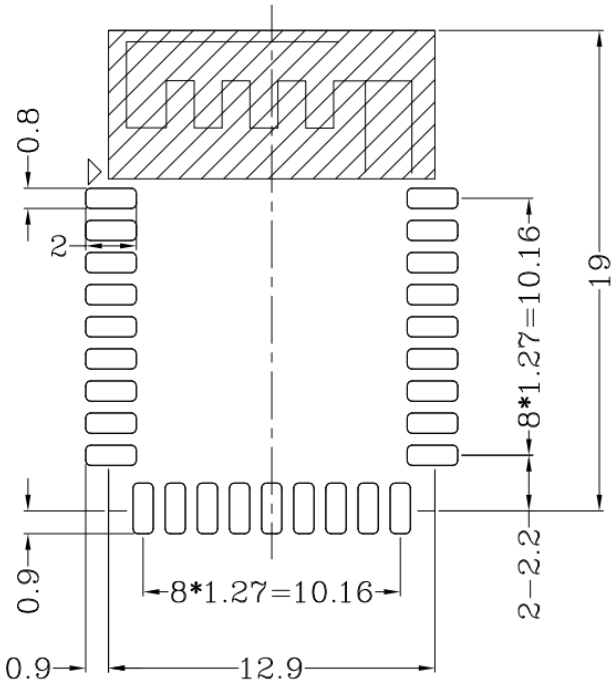

Picture 3-3 E98 Series Module PCB Package - Top View

Note: The shaded area is the PCB antenna, and the bottom layer cannot be copper or placed in any layer of this area.

Chapter 4 Application note

4.1 Antenna design guide

If you have high requirements for communication distance, an external antenna can be used. The IO port required to use the external antenna is PIN27 (ANT). The original antenna position under the module must be completely copper。

The figure below shows the circuit from the module ANT Pin to the external antenna. The red thick line should guarantee 50Ω impedance control. Keep the line as short as possible, do not hit the hole, do not take the acute line. Place more GND vias around the RF traces.

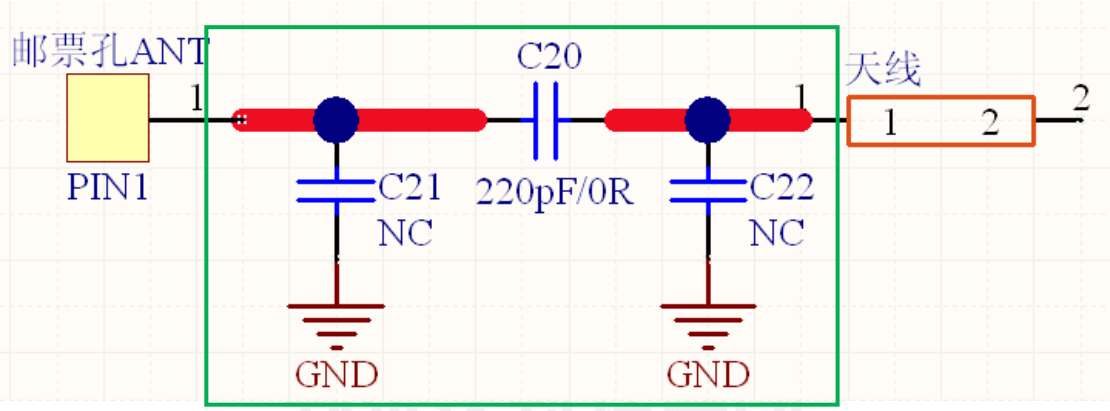

Figure 4-1 Schematic diagram of external antenna impedance matching circuit

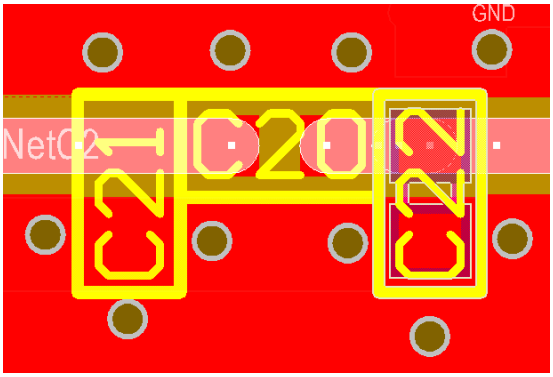

Picture 4-2 External antenna impedance matching circuit PCB schematic and routing instructions

The highlight of the trace sould control the impedance of 50Ω, the relationship between board thickness and line width, line spacing can be referred to:

Recommended value of FR4 Double panel:

(H=plate thickness，W=line width，D= Trace and copper spacing)

H=1.0mm，W=0.8mm，D=0.2mm

H=1.0mm，W=1.0mm，D=0.254mm(recommended)

H=1.2mm，W=1.0mm，D=0.2mm(recommended)

H=1.6mm，W=1.0mm，D=0.2mm (recommended)

(More design support is available to Lierda Technology Consulting)

4.2 Backplane layout considerations

A large clearance area is required around the antenna. Clearance refers to the open area in the projected area of the vertical plane of the antenna (both upper and lower ranges must be considered). In the range of the projection area of the antenna, whether it is patch or side-insertion, do not lay the ground (especially the on-board antenna), do not have metal or devices, and keep the antenna clearance to improve the radiation efficiency of the antenna.

The height (distance) between the antenna and the motherboard is also an important consideration. In general, the antenna needs to be at least 10mm above the main board, and at least 5mm in extreme environments. When the height of the antenna is less than 8 mm, the radiation efficiency of the antenna is limited.

The RF part of the module should not be avoided by the metal cavity. The distance between the RF part and the interference source should be more than 10mm. Common sources of interference are: battery (including electrical connection), capacitor, inductor, button, oscillator, power cord, Metal-containing screws or nuts, CPU, LCD, transformer, speaker, camera, product communication interface cable, power circuit, motor, etc.

If the PCB antenna is used, the PCB antenna should be on the edge of the PCB on the entire substrate. The spacing around the PCB antenna should be 10mm. The layers around the antenna should not be copper, trace or arranged. If there are multiple antennas, the distance between the antennas should be as far as possible to avoid co-channel interference and intermodulation interference;

Users should pay attention to the design. In the area where the Bottom layer has window opening for the antenna pad, no via hole can be placed to prevent short circuit.

4.4 Precautions

1. Power supply

It is recommended to use the DC stabilized power supply to supply power to the module. The power supply ripple is as small as possible. Generally, the ripple is less than 30mV. Excessive ripple may cause low sensitivity and poor connection quality. And the Bluetooth transmit signal will be coupled into the interference signal, causing the RF indicator to exceed the Bluetooth specification. In severe cases, it will be unable to connect and communicate. Try to use LDO to supply power to the module. The LDO should be away from the DC-DC power supply and inductance to prevent DC-DC radiation from contaminating the LDO's power supply. The module needs to be grounded reliably, and please pay attention to the correct connection of the positive and negative poles of the power supply. If a reversed connection is made, the module may be permanently damaged.

2. ESD electrostatic protection

Users should pay attention to the static requirements of the product when designing, see Table 2-1, and add static protection measures when designing the terminal product.

lierda 利尔达科技集团

Chapter 5 Production guidance

5.1 Production guide

It is recommended to use SMT machine patch, and the patch should completed within 24 hours after unpacking, otherwise it is necessary to re-vacuate the package to avoid the bad condition caused by moisture.。

If the package contains a humidity indicator card, it is recommended to judge whether the module needs to be baked according to the humidity card indication. The conditions for baking are as follows:

Baking temperature：125° C±5° C;

Set alarm temperature to 130° C;

After cooling <36 ° C under natural conditions, the SMT patch can be performed;

If the unpacking time is more than 3 months, special attention should be paid to whether the product is damp or not. Because the PCB immersion gold process may cause the pad to oxidize for more than 3 months, it may cause problems such as rosin joint and dry joint.

In order to ensure the reflow soldering pass rate, it is recommended to extract 10% of the products for visual inspection and AOI testing for the first time to ensure the correctness of furnace temperature control, device adsorption mode and placement method.

Operators at all stations in the entire production process must wear electrostatic gloves.

5.2 Module requirements for floor position

It is recommended that the green oil thickness of the bottom plate module position is less than 0.02mm, to avoid excessive thickness, and the high height module cannot effectively contact the solder paste to affect the welding quality.

In addition, the module needs to reserve 2mm space around to ensure the maintenance of it.

5.3 Steel stencil design

The thickness of the steel stencil is selected according to the package type of the device in the board. It is necessary to focus on the following requirements:

The module pad position can be locally thickened to 0.15~0.20mm to avoid rosin joint.

lierda®
利尔达科技集团

5.4 Reflow soldering instructions

Note: This work instruction is only suitable for lead-free work and is for reference only.。

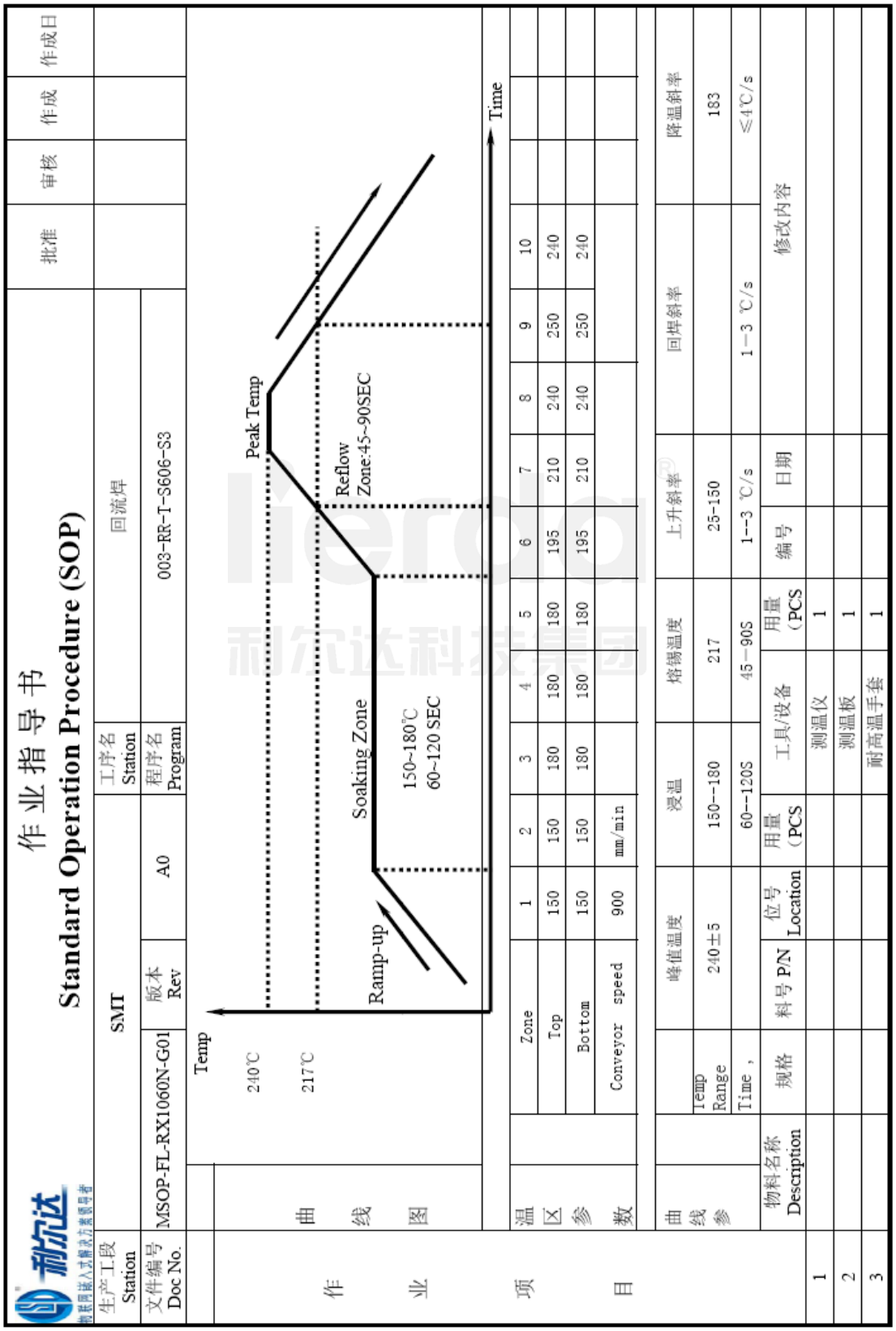

利尔达 物联网嵌入式解决方案领导者

作业指导书
Standard Operation Procedure (SOP)

批准	审核	作成	作成日

生产工段 Station	SMT		工序名 Station	回流焊
文件编号 Doc No.	MSOP-FL-RX1060N-G01	版本 Rev A0	程序名 Program	003-RR-T-S606-S3

作业项目

曲线图

温区参数

Zone	1	2	3	4	5	6	7	8	9	10
Top	150	150	180	180	180	195	210	240	250	240
Bottom	150	150	180	180	180	195	210	240	250	240
Conveyor speed	900 mm/min									

曲线参数

	峰值温度	浸温	熔锡温度	上升斜率	回焊斜率	降温斜率
Temp Range	240±5	150--180	217	25-150		183
Time ,		60--120S	45--90S	1--3 ℃/s	1--3 ℃/s	≤4℃/s

	物料名称 Description	规格	料号 P/N	位号 Location	用量 (PCS	工具/设备	用量 (PCS	编号	日期	修改内容
1						测温仪	1			
2						测温板	1			
3						耐高温手套	1			

Chapter 6 Product packaging

6.1 Packaging method

■ Tape ☐ Foam ☐ Electrostatic bag

6.2 Strip size

6.3 Product direction

Module roll tape packaging orientation：

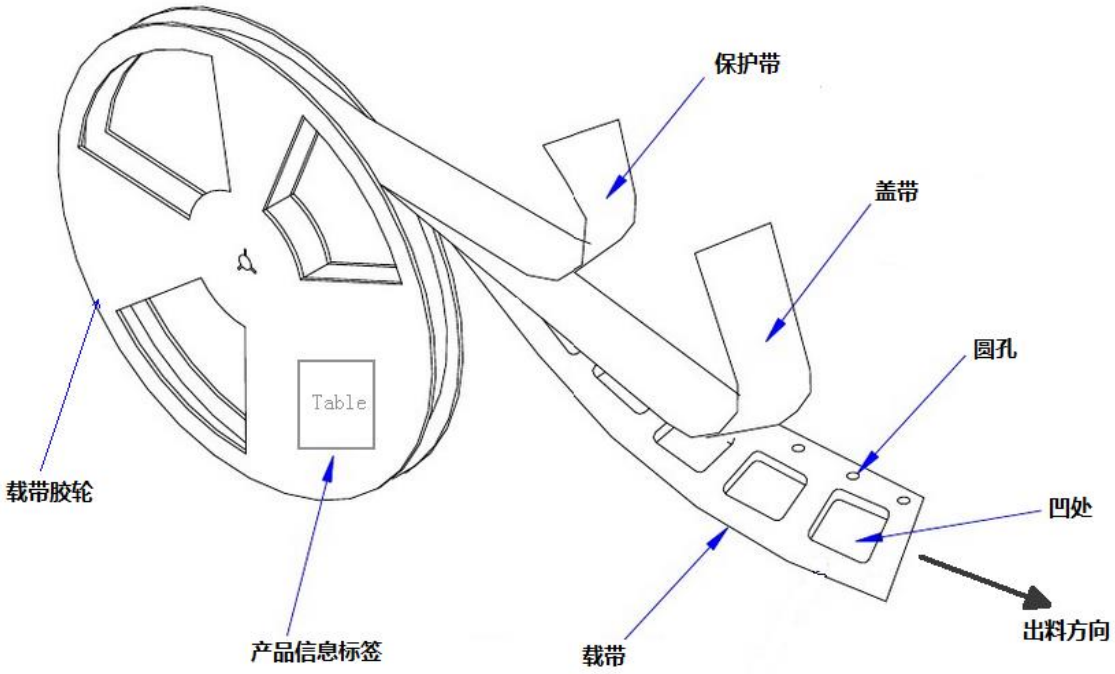

Chapter 7 RF Exposure Information and Statement

This equipment complies with FCC RF radiation exposure limits set forth for an uncontrolled environment.

This device complies with part 15 of the FCC rules . Operation is subject to the following two conditions: (1) this device may not cause harmful interference, and (2) this device must accept any interference received, including interference that may cause undesired operation.

NOTE: The manufacturer is not responsible for any radio or TV interference caused by unauthorized modifications to this equipment. Such modifications could void the user's authority to operate the equipment.

NOTE: This equipment has been tested and found to comply with the limits for a Class B digital device, pursuant to part 15 of the FCC Rules. These limits are designed to provide reasonable protection against harmful interference in a residential installation. This equipment generates uses and can radiate radio frequency energy and, if not installed and used in accordance with the instructions, may cause harmful interference to radio communications. However, there is no guarantee that interference will not occur in a particular installation. If this equipment does cause harmful interference to radio or television reception, which can be determined by turning the equipment off and on, the user is encouraged to try to correct the interference by one or more of the following measures:

- Reorient or relocate the receiving antenna.

- Increase the separation between the equipment and receiver.

-Connect the equipment into an outlet on a circuit different from that to which the receiver is connected.

-Consult the dealer or an experienced radio/TV technician for help

- This device and its antenna(s) must not be co-located or operating in conjunction with any other antenna or transmitter.

Advise the user

Welcome to use the products of Lierda Technology Group Co., Ltd. Please read this warning before using our products. If you have started using the instructions, you have read and accepted this notice.

Lierda Technology Group Co., Ltd. reserves the right to interpret and modify all materials provided, and is subject to change without notice.

lierda®
利尔达科技集团

ORIGINAL EQUIPMENT MANUFACTURER (OEM) NOTES

The OEM must certify the final end product to comply with unintentional radiators (FCC Sections 15.107 and 15.109) before declaring compliance of the final product to Part 15 of the FCC rules and regulations. Integration into devices that are directly or indirectly connected to AC lines must add with Class II Permissive Change.

The OEM must comply with the FCC labeling requirements. If the module's label is not visible when installed, then an additional permanent label must be applied on the outside of the finished product which states: "Contains transmitter module FCC ID: N8NL-BTMEB98G0NP4.
Additionally, the following statement should be included on the label and in the final product's user manual: "This device complies with Part 15 of the FCC Rules. Operation is subject to the following two conditions: (1) This device may not cause harmful interferences, and
(2) this device must accept any interference received, including interference that may cause undesired operation."

The module is allowed to be installed in mobile and portable applications

A module or modules can only be used without additional authorizations if they have been tested and granted under the same intended end - use operational conditions, including simultaneous transmission operations. When they have not been tested and granted in this manner, additional testing and/or FCC application filing may be required. The most straightforward approach to address additional testing conditions is to have the grantee responsible for the certification of at least one of the modules submit a permissive change application. When having a module grantee file a permissive change is not practical or feasible, the following guidance provides some additional options for host manufacturers. Integrations using modules where additional testing and/or FCC application filing(s) may be required are: (A) a module used in devices requiring additional RF exposure compliance information (e.g., MPE evaluation or SAR testing); (B) limited and/or split modules not meeting all of the module requirements; and (C) simultaneous transmissions for independent collocated transmitters not previously granted together.

This Module is full modular approval, it is limited to OEM installation ONLY.
Integration into devices that are directly or indirectly connected to AC lines must add with Class II Permissive Change. (OEM) Integrator has to assure compliance of the entire end product include the integrated Module. Additional measurements (15B) and/or equipment authorizations (e.g. Verification) may need to be addressed depending on co-location or simultaneous transmission issues if applicable. (OEM) Integrator is reminded to assure that these installation instructions will not be made available to the end user