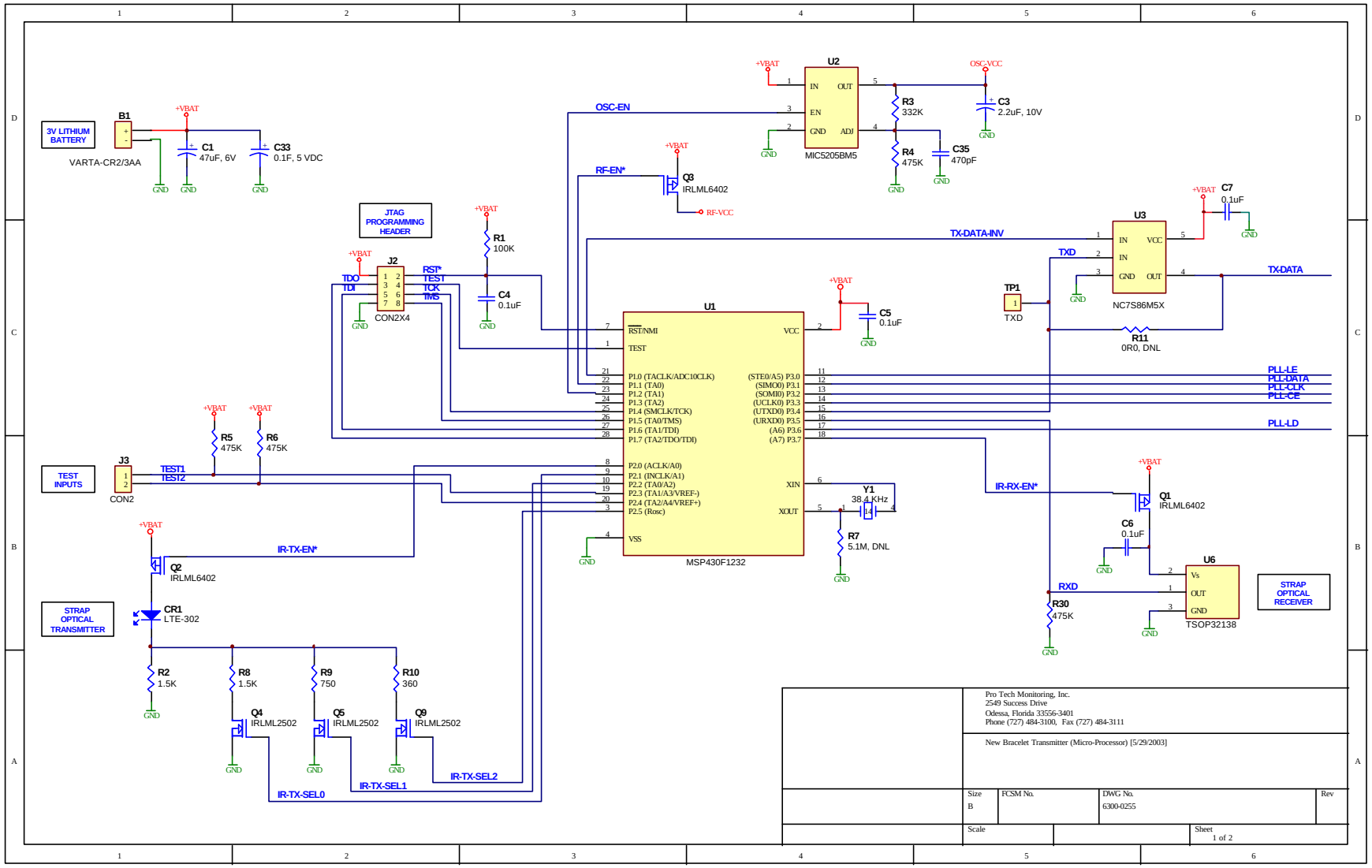
3V LITHIUM BATTERY
B1
VARTA-CR2/3AA
+VBAT
C1
47uF, 6V
C33
0.1F, 5 VDC
GND
U2
IN
OUT
EN
GND
ADJ
MIC5205BM5
OSC-VCC
R3
332K
R4
475K
C35
470pF
C3
2.2uF, 10V
OSC-EN
RF-EN*
Q3
IRLML6402
RF-VCC
JTAG PROGRAMMING HEADER
J2
CON2X4
TDO
TDI
RST*
TEST
TCK
TMS
R1
100K
C4
0.1uF
U1
MSP430F1232
RST/NMI
TEST
P1.0 (TACLK/ADC10CLK)
P1.1 (TA0)
P1.2 (TA1)
P1.3 (TA2)
P1.4 (SMCLK/TCK)
P1.5 (TA0/TMS)
P1.6 (TA1/TDI)
P1.7 (TA2/TDO/TDI)
P2.0 (ACLK/A0)
P2.1 (INCLK/A1)
P2.2 (TA0/A2)
P2.3 (TA1/A3/VREF-)
P2.4 (TA2/A4/VREF+)
P2.5 (Rosc)
VSS
VCC
XIN
XOUT
(STE0/A5) P3.0
(SIMO0) P3.1
(SOMI0) P3.2
(UCLK0) P3.3
(UTXD0) P3.4
(URXD0) P3.5
(A6) P3.6
(A7) P3.7
C5
0.1uF
Y1
38.4 KHz
R7
5.1M, DNL
U3
NC7S86M5X
IN
VCC
GND
OUT
C7
0.1uF
TX-DATA-INV
TXD
TX-DATA
TP1
R11
0R0, DNL
PLL-LE
PLL-DATA
PLL-CLK
PLL-CE
PLL-LD
TEST INPUTS
J3
CON2
TEST1
TEST2
R5
475K
R6
475K
IR-TX-EN*
Q2
IRLML6402
STRAP OPTICAL TRANSMITTER
CR1
LTE-302
R2
1.5K
R8
1.5K
R9
750
R10
360
Q4
IRLML2502
Q5
IRLML2502
Q9
IRLML2502
IR-TX-SEL0
IR-TX-SEL1
IR-TX-SEL2
IR-RX-EN*
Q1
IRLML6402
C6
0.1uF
U6
Vs
OUT
GND
TSOP32138
RXD
R30
475K
STRAP OPTICAL RECEIVER
Pro Tech Monitoring, Inc.
2549 Success Drive
Odessa, Florida 33556-3401
Phone (727) 484-3100, Fax (727) 484-3111
New Bracelet Transmitter (Micro-Processor) [5/29/2003]
Size
B
FCSM No.
DWG No.
6300-0255
Rev
Scale
Sheet
1 of 2

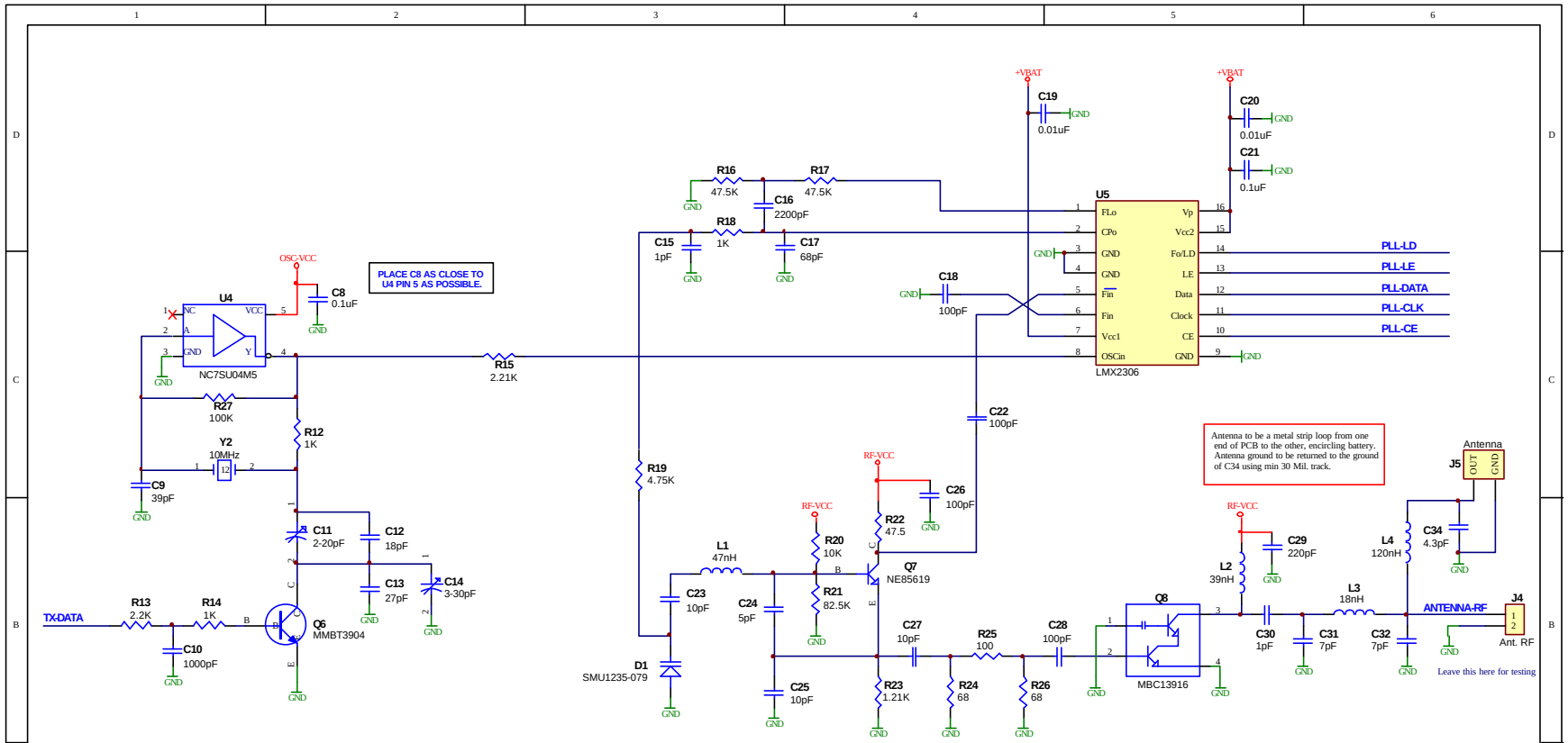
PLACE C8 AS CLOSE TO U4 PIN 5 AS POSSIBLE.
Antenna to be a metal strip loop from one end of PCB to the other, encircling battery. Antenna ground to be returned to the ground of C34 using min 30 Mil. track.
Leave this here for testing
U4
NC7SU04M5
U5
LMX2306
Q6
MMBT3904
Q7
NE85619
Q8
MBC13916
D1
SMU1235-079
Y2
10MHz
J4
Ant. RF
J5
Antenna
TX-DATA
ANTENNA-RF
PLL-LD
PLL-LE
PLL-DATA
PLL-CLK
PLL-CE
+VBAT
OSC-VCC
RF-VCC
GND
R13 2.2K
R14 1K
R15 2.21K
R16 47.5K
R17 47.5K
R18 1K
R19 4.75K
R20 10K
R21 82.5K
R22 47.5
R23 1.21K
R24 68
R25 100
R26 68
R27 100K
R12 1K
C8 0.1uF
C9 39pF
C10 1000pF
C11 2-20pF
C12 18pF
C13 27pF
C14 3-30pF
C15 1pF
C16 2200pF
C17 68pF
C18 100pF
C19 0.01uF
C20 0.01uF
C21 0.1uF
C22 100pF
C23 10pF
C24 5pF
C25 10pF
C26 100pF
C27 10pF
C28 100pF
C29 220pF
C30 1pF
C31 7pF
C32 7pF
C34 4.3pF
L1 47nH
L2 39nH
L3 18nH
L4 120nH
Pro Tech Monitoring, Inc.
2549 Success Drive
Odessa, Florida 33556
Phone (727) 484-3100, Fax (727) 484-3111
New Bracelet Transmitter (RF Section) [5/29/2003]
Size B
FCSM No.
DWG No. 6300-0255
Rev
Scale
Sheet 2 of 2