SPECIFICATION

Part Number	:	**ILA.01**
Product Name	:	Low Profile and High Efficiency 915 MHz ISM Band Loop Antenna
Features	:	Small size antenna, low profile, and high efficiency 915 MHz ISM Band 1.5 dBi Peak Gain 10 x 3.2 x 0.5 mm size SMT Compatible **RoHS Compliant**

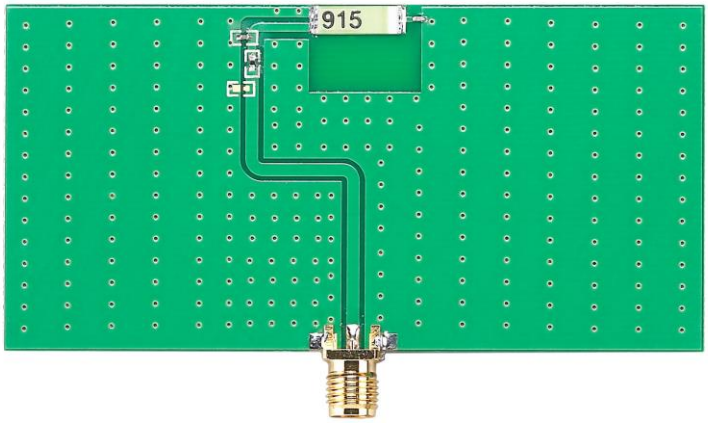

1. Introduction

The ILA.01 is a 915 MHz ISM band antenna with excellent efficiency, 60% at the center frequency and 45% at the band edges. This antenna works the best when placed at the center of the board edge. The antenna, at 10 x 3.2 x 0.5 mm, is low profile and would be suitable for devices with space constraints. The ILA.01 is delivered on tape and reel and now allows M2M customers to use an omni-directional SMT antenna. The omni-directional radiation characteristics allow for excellent performance regardless of device orientation. This is especially useful for devices that are not fixed in one particular spot during use. When there is little PCB space available for antenna placement, but high performance is required, the ILA.01 is the ideal choice. The ILA.01 Loop antenna can be used in automated meter reading (AMR), radio frequency identification (RFID), remote monitoring, healthcare, sensing, and other 915 MHz applications.

2. Specification

ELECTRICAL	
Antenna	ILA.01
Standard	915 MHz ISM
Operation Frequency (MHz)	902-928 MHz
Polarization	Linear
Impedance	50 Ohms
Max VSWR (dBi)	6:1
Max Return Loss (dB)	-2.8 dB
Peak Gain	1.5 dBi
Efficiency (%)	50 typ.
Average Gain (dB)	-5
Radiation Properties	Omni-directional
Max Input Power	5 W

* The ILA.01 antenna performance was measured with 80x40 mm ground plane.

MECHANICAL	
Dimensions (mm)	10x3.2x0.5
Required Space (mm)	11x10.4
Material	Ceramic
EVB Connector	SMA(F)

ENVIRONMENTAL	
Operation Temperature	-40°C to 85°C
Storage Temperature	-40°C to 105°C
Relative Humidity	40% to 95%
RoHS Compliant	Yes

3. Test Setup

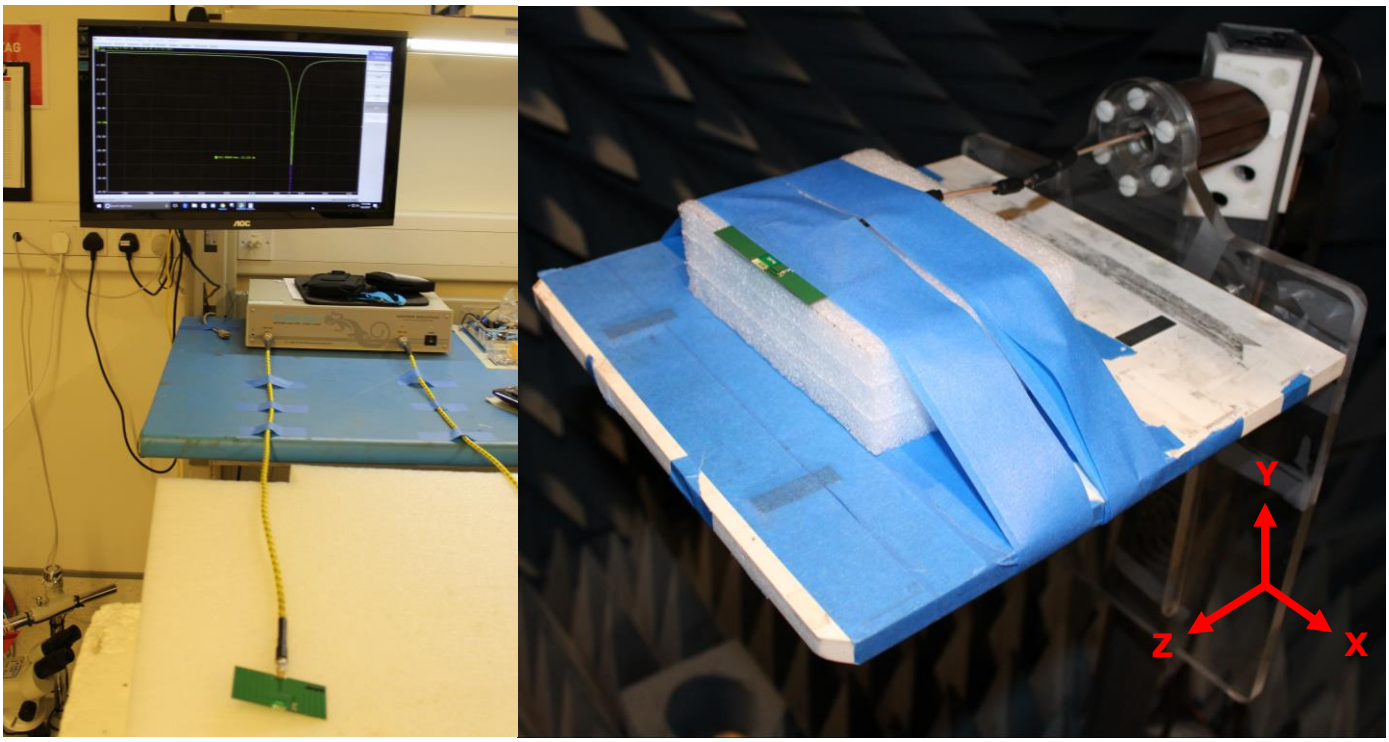

Figure 1. Impedance measurements (left hand) and peak gain, average gain, efficiency, and radiation pattern measurements (right hand).

4. Antenna Parameters

4.1. Return Loss

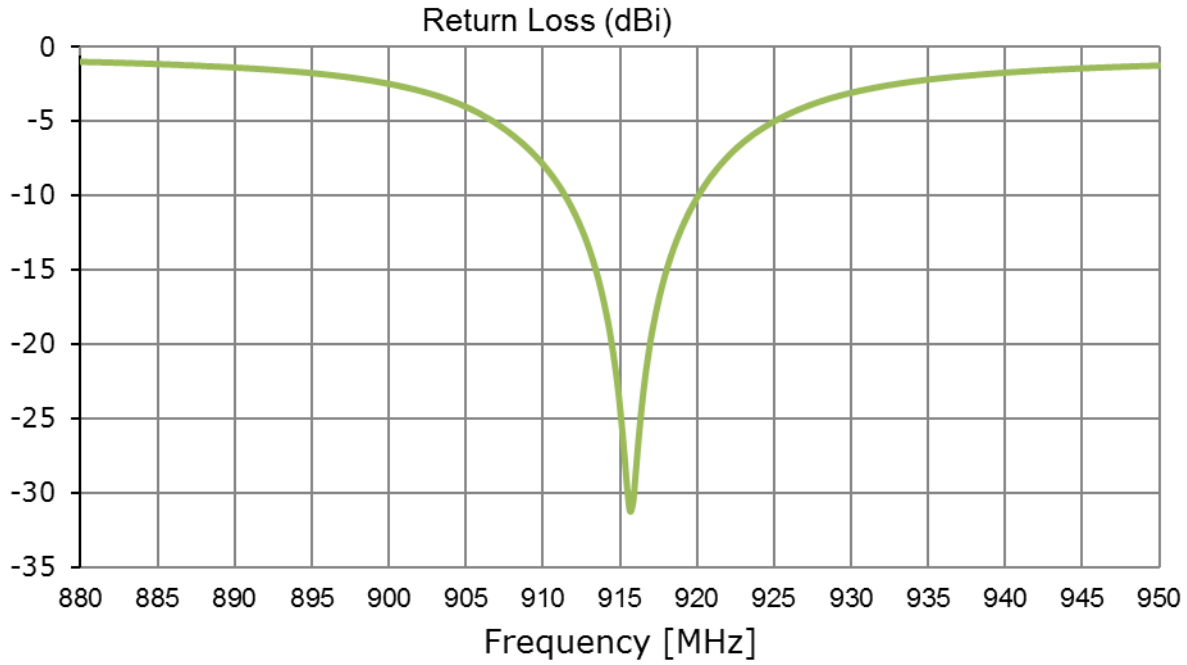

Figure 2. Return loss of 915MHz ISM Band Antenna ILA.01

4.2. VSWR

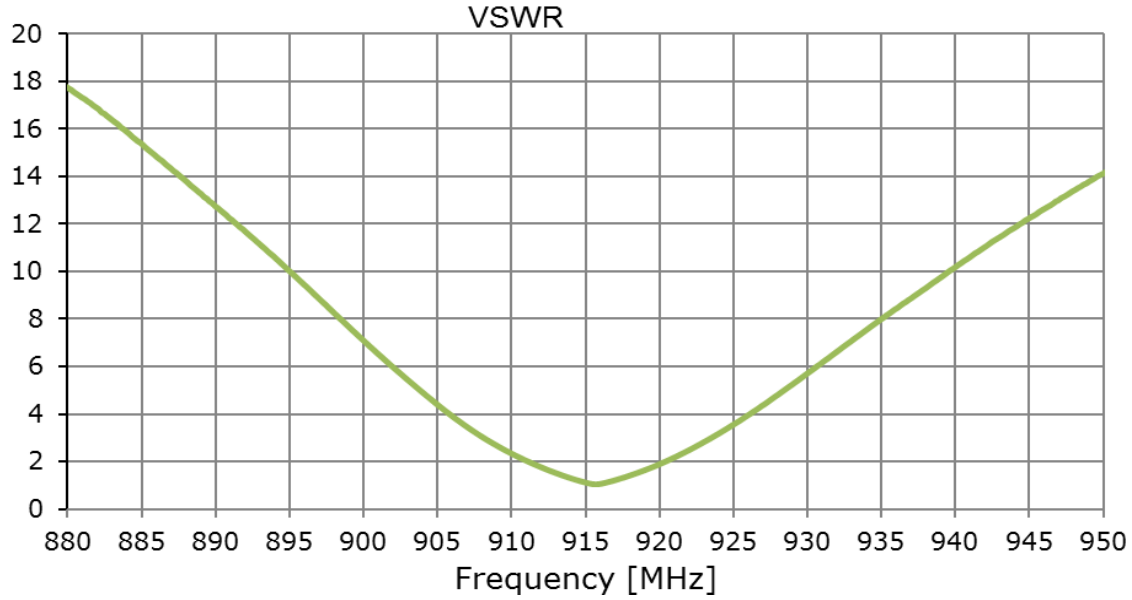

Figure 3. VSWR of 915 MHz ISM Band Antenna ILA.01

4.3. Efficiency

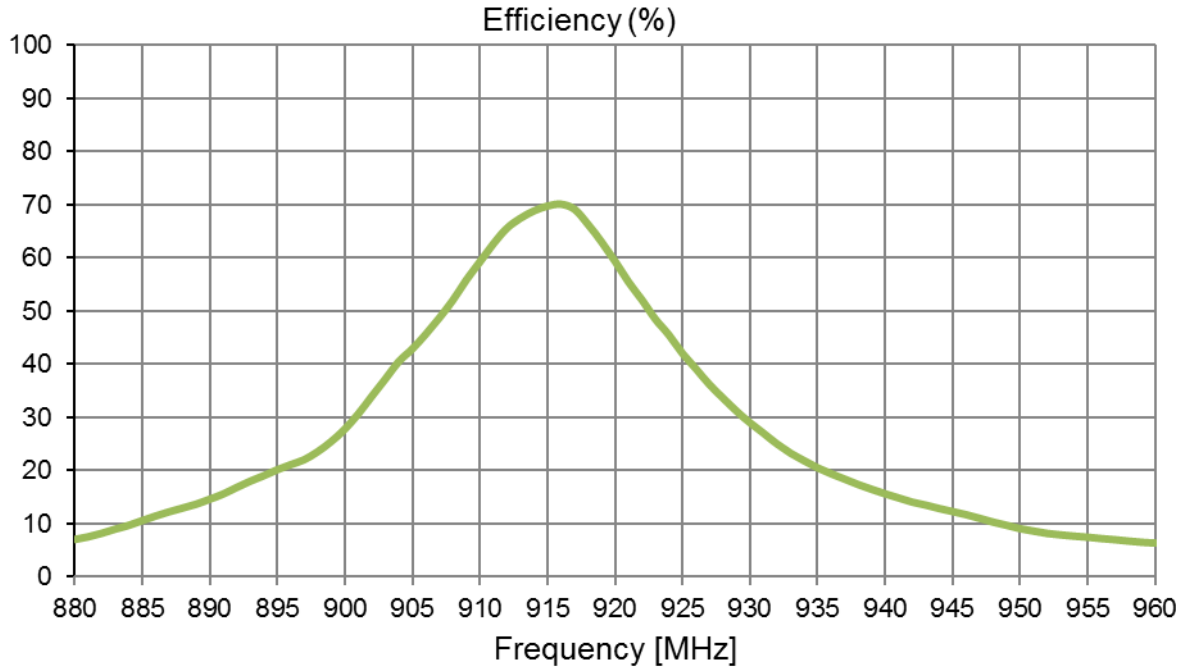

Figure 4. Efficiency of 915 MHz ISM Band Antenna ILA.01

4.4. Peak Gain

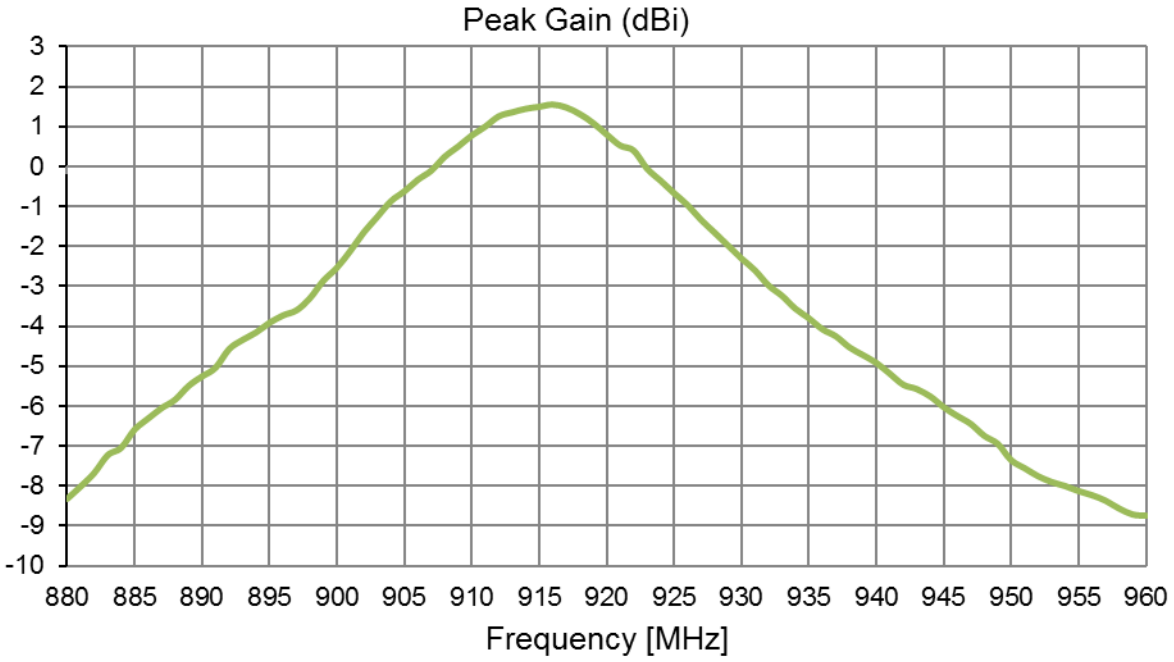

Figure 5. Peak Gain of 915 MHz ISM Band Antenna ILA.01

4.5. Average Gain

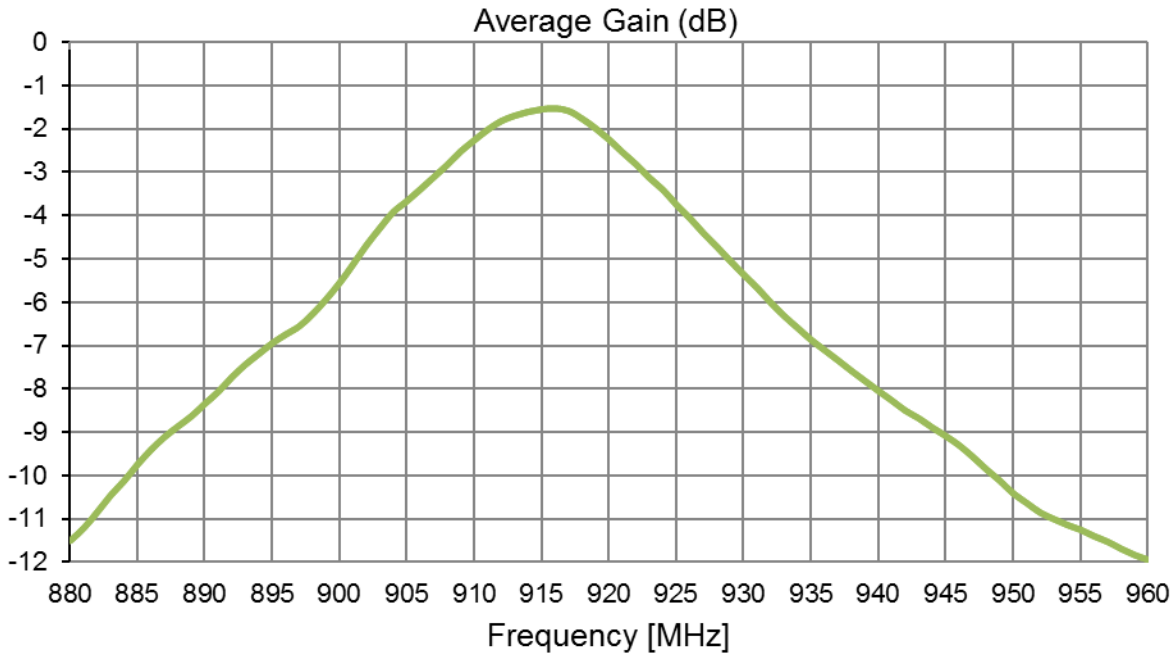

Figure 6. Average Gain of 915 MHz ISM Band Antenna ILA.01

4.6. Radiation Pattern

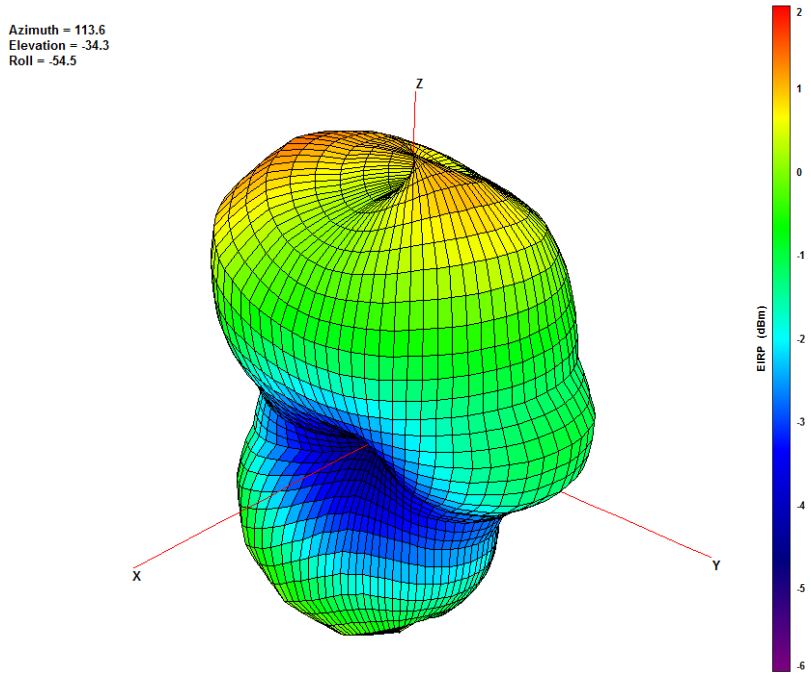

Figure 7. Radiation Pattern at 915 MHz of the ILA.01 Antenna.

5. Layout Guide

5.1 Solder Land pattern

Land pattern for soldering is as shown below. A matching circuit similar to the one shown in section 5.2 is also required.

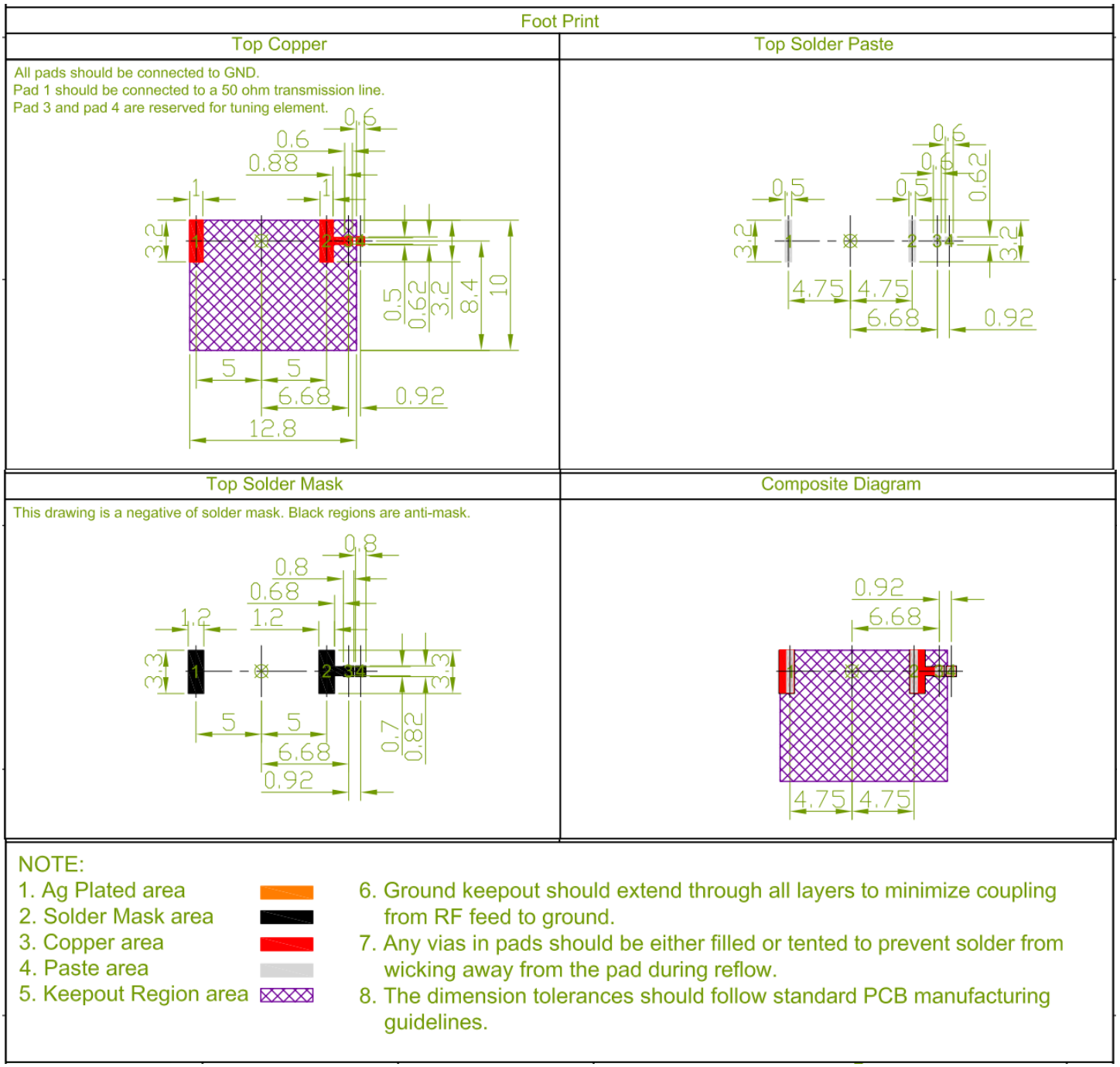

Figure 8. Foot Print Drawing of the ILA.01 Antenna

5.2 Solder Land Pattern

This antenna includes a fine tuning element (as shown in the land patterns above) that can be used to slightly shift antenna resonance.

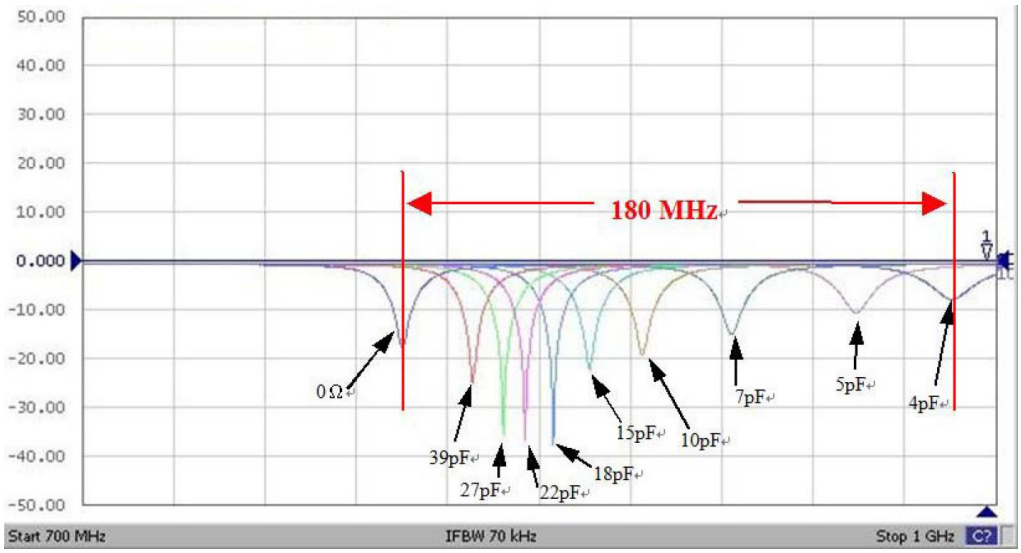

5.3 Matching Circuit

Like all antennas, surrounding components, enclosures, and changes to the GND plane dimensions can alter performance. A pi-matching network like the one shown below is required in case adjustments need to be made. The antenna EVB has a similar matching network. The components on the EVB are a good starting point for a new design, but will need to be adjusted upon integration for best performance. The zero ohm resistor is needed for the ability to solder down a coax pigtail to make measurements with a vector network analyzer.

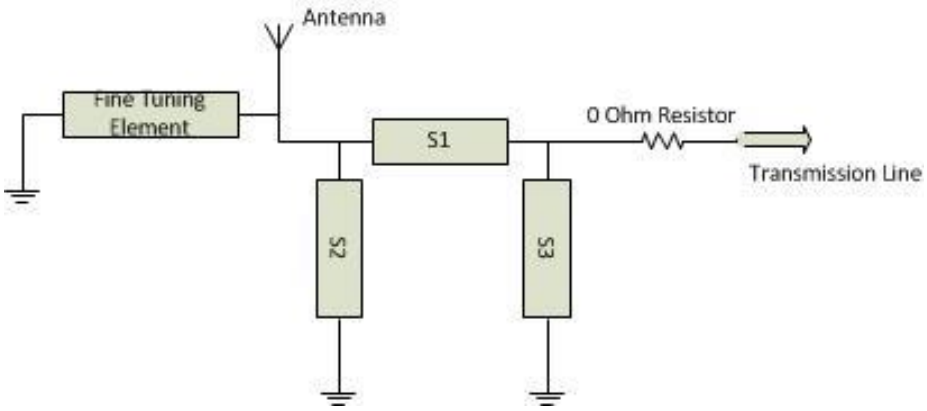

Figure 9. Matching Circuits Block Diagram.

6. Drawings (Unit: mm)

Antenna Main Body

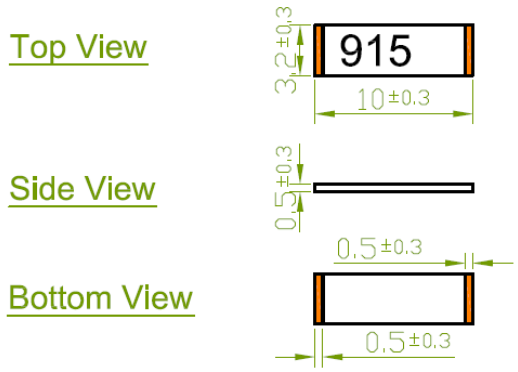

Antenna with EVB

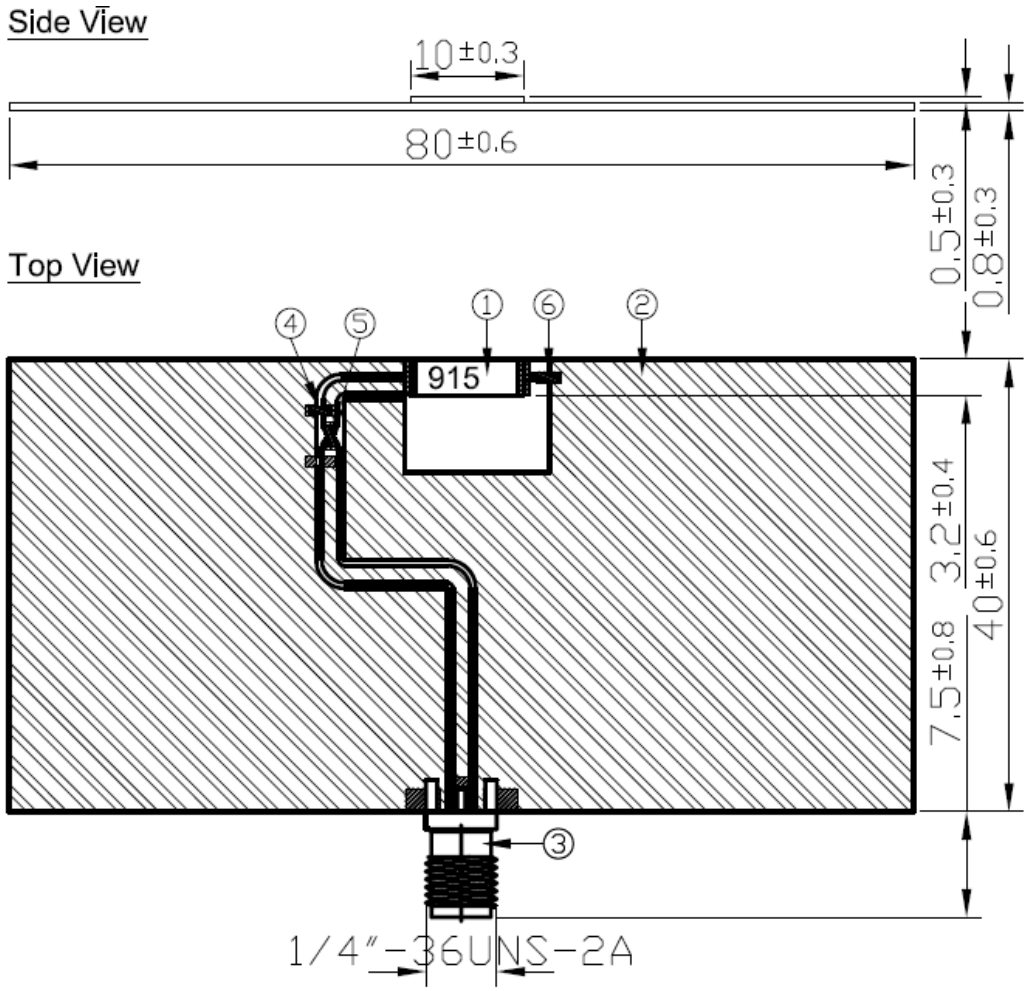

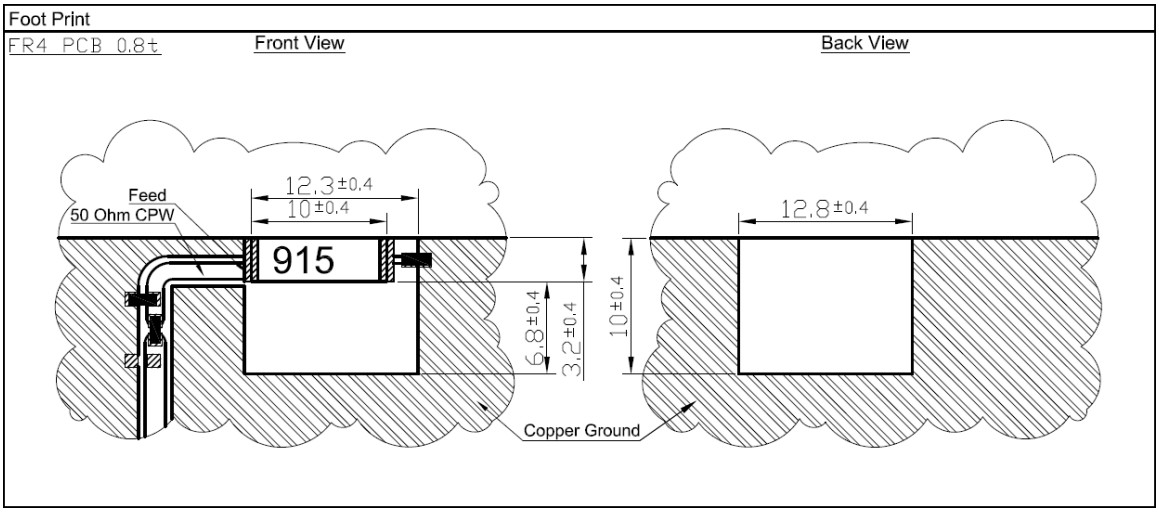

NOTES:
1. Solder Area
2. Logo & Text Ink Printing : Black
3. Copper
4. Matching Component
5. Component 6 is the tuning element of this antenna. D03

	Name	P/N	Material	Finish	QTY
1	ILA.01 Antenna	001513F000012A	Ceramic	N/A	1
2	ILA.01 EVB Board	100213F000012A	FR4 0.8t	Green	1
3	SMA(F) ST	200413F000012A	Brass	Gold	1
4	Capacitor 4.3pF (0402)	001514F020012A	Ceramic	N/A	1
5	Resistor 0Ω (0402)	001511J010012A	Ceramic	N/A	1
6	Capacitor 10pF (0402)	001514F010012A	Ceramic	N/A	1

Figure 10. Drawing of the ILA.01 Antenna

7. Recommended Reflow

The ILA01 Loop Antenna can be assembled following either Sn-Pb or Pb-Free assembly processes. The recommended soldering temperatures are as follows:

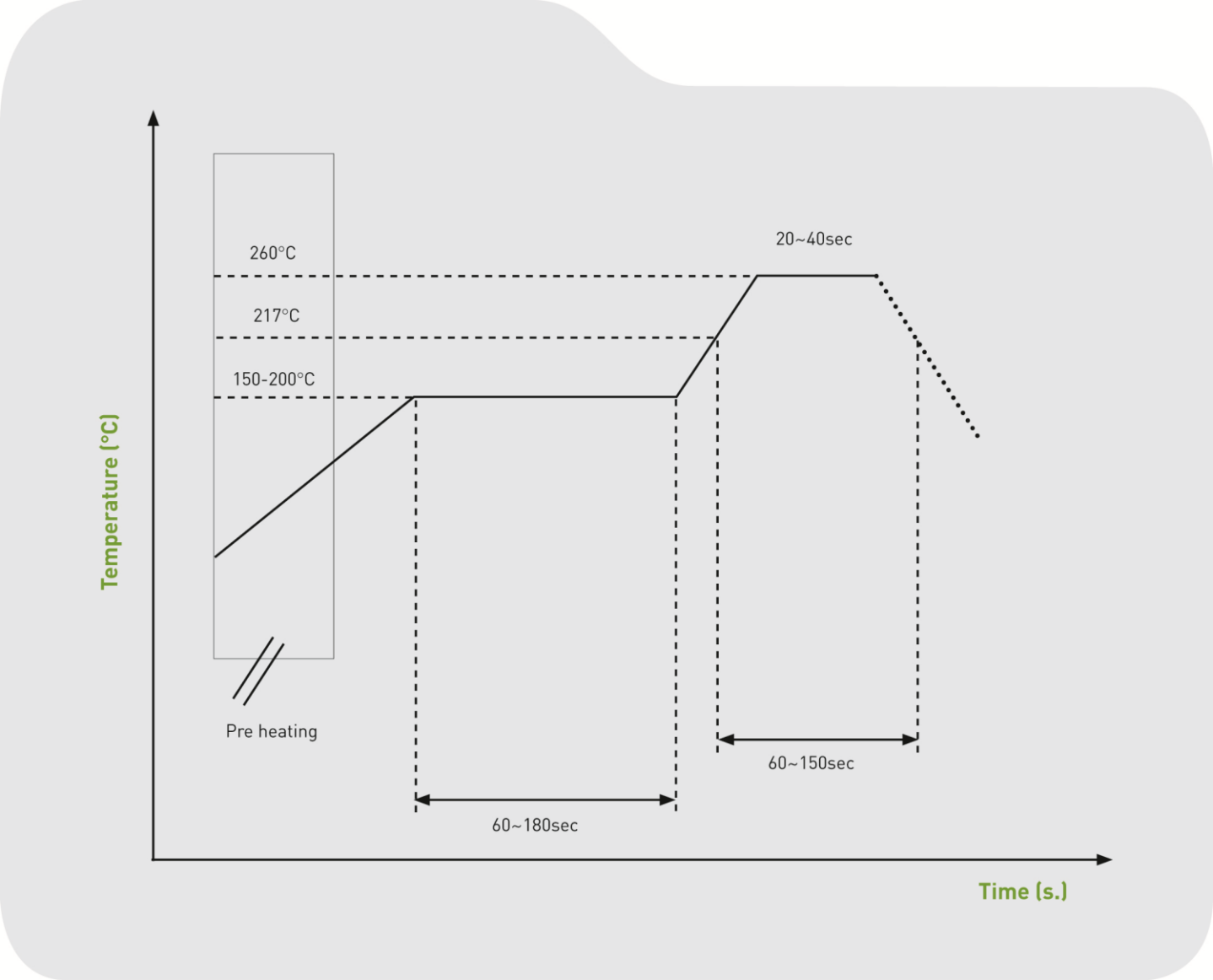

Figure 11. Reflow Temperature Recommendation

8. Packaging

The ILA.01 antennas are delivered in tape and reel with EIA 481-B polystyrene with 6000 pieces per reel.

6000 pcs ILA.01 reel
Dimensions - 420*380mm
Weight -1050g

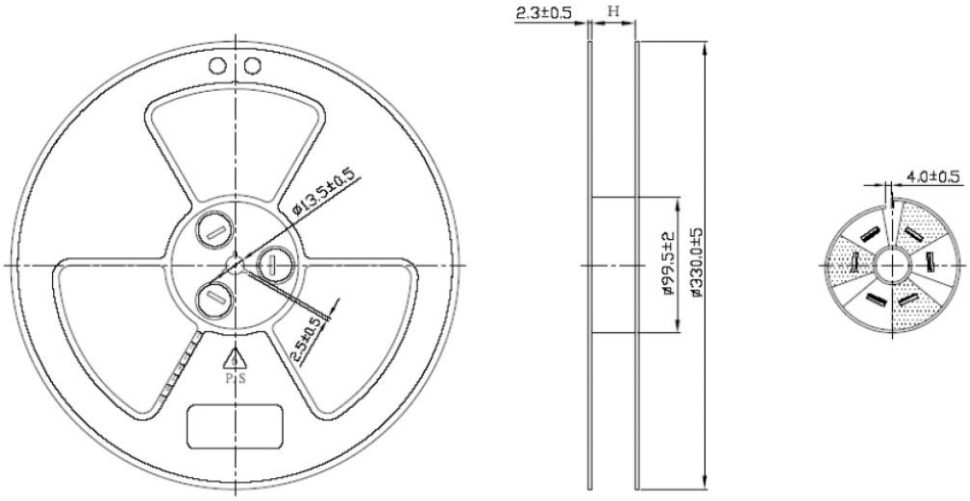

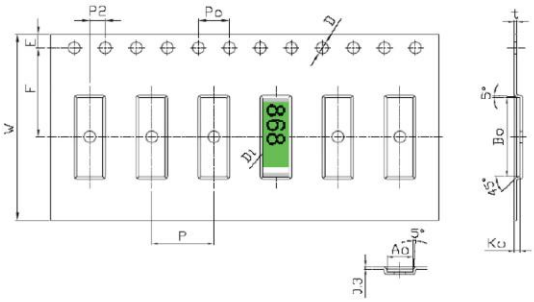

Tape Dimensions(unit: mm)

Feature	Specifications	Tolerances
W	24.00	±0.30
P	8.00	±0.10
E	1.75	±0.10
F	11.50	±0.10
P2	2.00	±0.10
D	1.50	+0.10 0.00
D1	1.50	±0.10
Po	4.00	±0.10
10Po	40.00	±0.20

Pocket Dimensions(unit: mm)

Feature	Specifications	Tolerances
Ao	3.40	±0.10
Bo	10.20	±0.10
Ko	0.70	±0.10
t	0.30	±0.05

6000 pcs ILA.01 reel
Dimensions - 420*380mm
Weight -1050g

6 reels, 36000pcs
in one carton
Carton Dimensions - 350*350*210mm
Weight - 7.1Kg

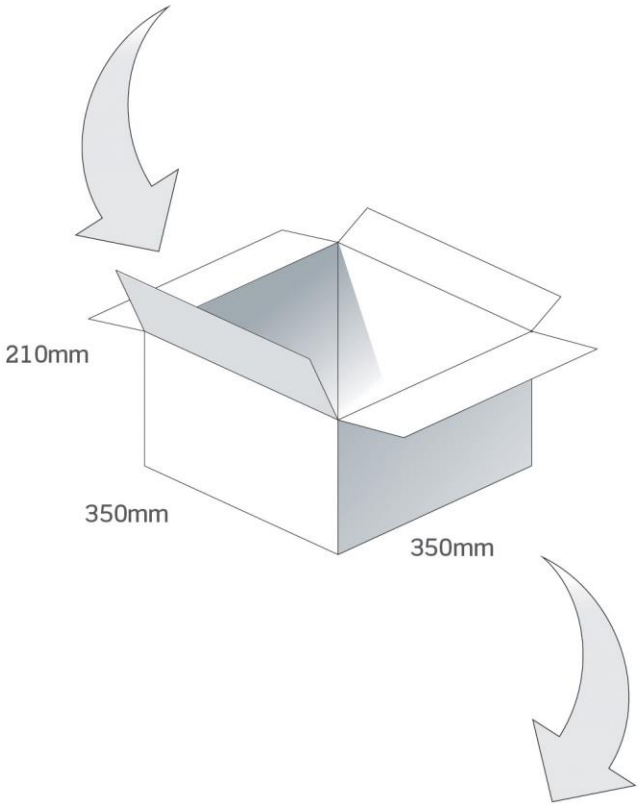

Pallet Dimensions 1200*1000*1460mm
36 Cartons per Pallet
6 Cartons per layer
6 Layers

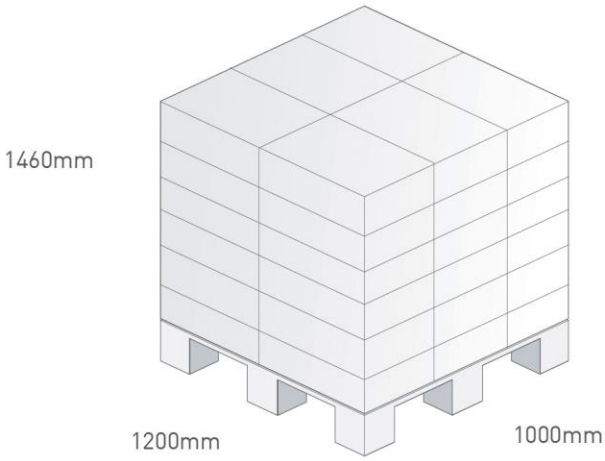

Taoglas makes no warranties based on the accuracy or completeness of the contents of this document and reserves the right to make changes to specifications and product descriptions at any time without notice. Taoglas reserves all rights to this document and the information contained herein.

Reproduction, use or disclosure to third parties without express permission is strictly prohibited.

Copyright © Taoglas Ltd.