TEST REPORT

Applicant:	Allied Universal Electronic Monitoring US, Inc.
Address of Applicant:	1838 Gunn Highway, Odessa, Florida 33556, United States
Manufacturer:	Allied Universal Electronic Monitoring US, Inc.
Address of Manufacturer:	1838 Gunn Highway, Odessa, Florida 33556, United States
Equipment Under Test (EUT)	
Product Name:	Tracker 100
Model No.:	TRC-100-NA-9-00
FCC ID:	NC3TRACKER-100
Applicable standards:	FCC CFR Title 47 Part 2 FCC CFR Title 47 Part 22 FCC CFR Title 47 Part 24
Date of sample receipt:	November 10, 2023
Date of Test:	November 10, 2023-December 22, 2023
Date of report issued:	December 25, 2023
Test Result :	PASS *

* In the configuration tested, the EUT complied with the standards specified above.

Authorized Signature:

Robinson Luo
Laboratory Manager

TESTING
NVLAP LAB CODE 600179-0

This results shown in this test report refer only to the sample(s) tested, this test report cannot be reproduced, except in full, without prior written permission of the company. The report would be invalid without specific stamp of test institute and the signatures of compiler and approver.

2 Version

Version No.	Date	Description
00	*December 25, 2023*	*Original*

Prepared By: ***Date:*** *December 25, 2023*

Project Engineer

Check By: ***Date:*** *December 25, 2023*

Reviewer

3 Contents

Page

1 COVER PAGE 1

2 VERSION 2

3 CONTENTS 3

4 TEST SUMMARY 4

5 GENERAL INFORMATION 5

5.1 GENERAL DESCRIPTION OF EUT 5
5.2 RELATED SUBMITTAL(S) / GRANT (S) 7
5.3 TEST METHODOLOGY 7
5.4 DEVIATION FROM STANDARDS 7
5.5 ABNORMALITIES FROM STANDARD CONDITIONS 7
5.6 TEST FACILITY 7
5.7 TEST LOCATION 7

6 TEST INSTRUMENTS LIST 8

7 SYSTEM TEST CONFIGURATION 9

7.1 TEST MODE 9
7.2 CONFIGURATION OF TESTED SYSTEM 9
7.3 CONDUCTED AVERAGE OUTPUT POWER AND ERP/EIRP 10
7.4 PEAK-TO-AVERAGE RATIO 11
7.5 OCCUPY BANDWIDTH 12
7.6 MODULATION CHARACTERISTIC 13
7.7 OUT OF BAND EMISSION AT ANTENNA TERMINALS 13
7.8 SPURIOUS RADIATION EMISSIONS 14
7.9 FREQUENCY STABILITY V.S. TEMPERATURE MEASUREMENT 21
7.10 FREQUENCY STABILITY V.S. VOLTAGE MEASUREMENT 22

8 TEST SETUP PHOTO 23

9 EUT CONSTRUCTIONAL DETAILS 23

4 Test Summary

Test Item	Section in CFR 47	Result
RF Output Power	Part 2.1046 Part 22.913 Part 24.232	Pass
Peak-to-Average Ratio	Part 2.1046 Part 24.232	Pass
99% Occupied Bandwidth & 26dB Bandwidth	Part 2.1049	Pass
Modulation Characteristics	Part 2.1047	N/A
Spurious Emissions at Antenna Terminal	Part 2.1051 Part 22.917 Part 24.238	Pass
Spurious Radiation Emissions	Part 2.1053 Part 22.917 Part 24.238	Pass
Out of band emission, Band Edge	Part 2.1051 Part 22.917 Part 24.238	Pass
Frequency stability vs. temperature	Part 2.1055 Part 22.355 Part 24.235	Pass
Frequency stability vs. voltage	Part 2.1055 Part 22.355 Part 24.235	Pass

Remarks:

1. Pass: The EUT complies with the essential requirements in the standard.
2. N/A: Not applicable.

5 General Information

5.1 General Description of EUT

Product Name:	Tracker 100
Model No.:	TRC-100-NA-9-00
Test sample(s) ID:	GTS2023110098-1
Sample(s) Status:	Engineer sample
S/N:	1PC1039B03110227230003
Support Bands:	WCDMA Band II, WCDMA Band V
TX Frequency:	WCDMA Band II: 1850MHz~1910MHz WCDMA Band V: 824MHz~849MHz
Modulation type:	WCDMA Band II/V: QPSK 16QAM
Antenna type:	Ceramic Antenna
Antenna gain:	WCDMA Band II: 3.2dBi WCDMA Band V: 1dBi
Power supply:	DC 3.6V, 1230mAh for Li-ion battery

Note:
1. Antenna gain information provided by the customer.
2.The relevant information of the sample is provided by the entrusting company, and the laboratory is not responsible for its authenticity.

Operation Frequency List:

WCDMA Band V		WCDMA Band II	
Channel	Frequency (MHz)	Channel	Frequency (MHz)
4132	826.40	9262	1852.40
4133	826.60	9263	1852.60
⋮	⋮	⋮	⋮
4181	836.20	9399	1879.80
4182	836.40	9400	1880.00
4183	836.60	9401	1880.20
⋮	⋮	⋮	⋮
4232	846.40	9537	1907.40
4233	846.60	9538	1907.60

Final test channel:

WCDMA Band V		WCDMA Band II	
Channel	Frequency(MHz)	Channel	Frequency(MHz)
4132	826.40	9262	1852.40
4183	836.60	9400	1880.00
4233	846.60	9538	1907.60

5.2 Related Submittal(s) / Grant (s)

This submittal(s) (test report) is filing to comply with Section Part 22 /24 of the FCC CFR 47 Rules.

5.3 Test Methodology

Both conducted and radiated testing were performed according to the procedures document on ANSI C63.26:2015 and FCC CFR 47.1046, 2.1047, 2.1049, 2.1051, 2.1053, 2.1055 and 2.1057

5.4 Deviation from Standards

None.

5.5 Abnormalities from Standard Conditions

None.

5.6 Test Facility

The test facility is recognized, certified, or accredited by the following organizations:

● **FCC —Registration No.: 381383**

Designation Number: CN5029

Global United Technology Services Co., Ltd., Shenzhen EMC Laboratory has been registered and fully described in a report filed with the (FCC) Federal Communications Commission. The acceptance letter from the FCC is maintained in files.

● **ISED—Registration No.: 9079A**

CAB identifier: CN0091

The 3m Semi-anechoic chamber of Global United Technology Services Co., Ltd. has been registered by Certification and Engineering Bureau of ISED for radio equipment testing.

● **NVLAP (LAB CODE:600179-0)**

Global United Technology Services Co., Ltd., is accredited by the National Voluntary Laboratory Accreditation Program (NVLAP).

5.7 Test Location

All tests were performed at:

Global United Technology Services Co., Ltd.
Address: No. 123-128, Tower A, Jinyuan Business Building, No.2, Laodong Industrial Zone, Xixiang Road, Baoan District, Shenzhen, Guangdong, China 518102
Tel: 0755-27798480
Fax: 0755-27798960

6 Test Instruments list

Radiated Emission:						
Item	**Test Equipment**	**Manufacturer**	**Model No.**	**Inventory No.**	**Cal.Date (mm-dd-yy)**	**Cal.Due date (mm-dd-yy)**
1	3m Semi- Anechoic Chamber	ZhongYu Electron	9.2(L)*6.2(W)* 6.4(H)	GTS250	June 23, 2021	June 22, 2024
2	Control Room	ZhongYu Electron	6.2(L)*2.5(W)* 2.4(H)	GTS251	N/A	N/A
3	EMI Test Receiver	Rohde & Schwarz	ESU26	GTS203	April 14, 2023	April 13, 2024
4	BiConiLog Antenna	SCHWARZBECK MESS-ELEKTRONIK	VULB9168	GTS640	March 19, 2023	March 18, 2025
5	Double -ridged waveguide horn	SCHWARZBECK MESS-ELEKTRONIK	BBHA 9120 D	GTS208	April 17, 2023	April 16, 2025
6	EMI Test Software	AUDIX	E3	N/A	N/A	N/A
7	Wideband Radio Communication Tester	Rohde & Schwarz	CMW500	GTS575	April 14, 2023	April 13, 2024
8	Loop Antenna	ZHINAN	ZN30900A	GTS534	Nov. 13, 2023	Nov.12, 2024
9	Broadband Preamplifier	SCHWARZBECK	BBV9718	GTS535	April 14, 2023	April 13, 2024
10	Amplifier(1GHz-26.5GHz)	HP	8449B	GTS601	April 14, 2023	April 13, 2024
11	Horn Antenna (18-26.5GHz)	/	UG-598A/U	GTS664	Oct. 29, 2023	Oct. 28, 2024
12	Horn Antenna (26.5-40GHz)	A.H Systems	SAS-573	GTS665	Oct. 29, 2023	Oct. 28, 2024
13	FSV·Signal Analyzer (10Hz-40GHz)	Keysight	FSV-40-N	GTS666	March 13, 2023	March 12, 2024
14	Amplifier	/	LNA-1000-30S	GTS650	April 14, 2023	April 13, 2024
15	CDNE M2+M3-16A	HCT	30MHz-300MHz	GTS692	Nov. 08, 2023	Nov.07, 2024
16	Wideband Amplifier	/	WDA-01004000-15P35	GTS602	April 14, 2023	April 13, 2024
17	Thermo meter	JINCHUANG	GSP-8A	GTS643	April 19, 2023	April 18, 2024
18	RE cable 1	GTS	N/A	GTS675	July 31. 2023	July 30. 2024
19	RE cable 2	GTS	N/A	GTS676	July 31. 2023	July 30. 2024
20	RE cable 3	GTS	N/A	GTS677	July 31. 2023	July 30. 2024
21	RE cable 4	GTS	N/A	GTS678	July 31. 2023	July 30. 2024
22	RE cable 5	GTS	N/A	GTS679	July 31. 2023	July 30. 2024
23	RE cable 6	GTS	N/A	GTS680	July 31. 2023	July 30. 2024
24	RE cable 7	GTS	N/A	GTS681	July 31. 2023	July 30. 2024
25	RE cable 8	GTS	N/A	GTS682	July 31. 2023	July 30. 2024

General used equipment:						
Item	**Test Equipment**	**Manufacturer**	**Model No.**	**Inventory No.**	**Cal.Date (mm-dd-yy)**	**Cal.Due date (mm-dd-yy)**
1	Barometer	KUMAO	SF132	GTS647	April 19, 2023	April 18, 2024

7 System test configuration

7.1 Test mode

During all testing, EUT is in link mode with base station emulator at maximum power level. The spurious emission measurements were carried out in semi-anechoic chamber with 3-meter test range, and EUT is rotated on the worst emission.

Test modes are chosen to be reported as the worst case configuration below:

Test modes		
Band	Radiated	Conducted
WCDMA Band II	■ RMC 12.2Kbps link	■ RMC 12.2Kbps link
WCDMA Band V	■ RMC 12.2Kbps link	■ RMC 12.2Kbps link

7.2 Configuration of Tested System

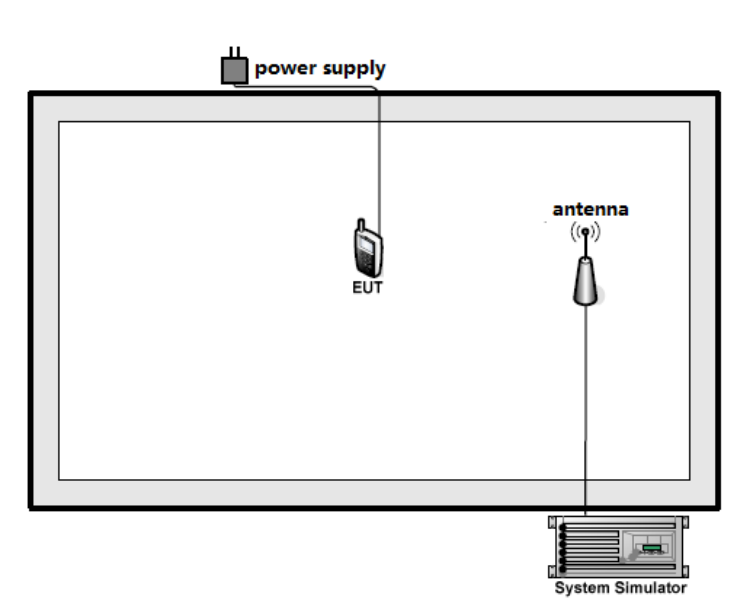

7.3 Conducted Average Output Power and ERP/EIRP

Test Requirement:	FCC part 22.913 & FCC part 24.232 & FCC part2.1046
Test Method:	FCC KDB 971168 D01 V03r01 Section
Limit:	WCDMA Band V: 7W(38.45dBm) WCDMA Band II: 2W(33.01dBm)
Test setup:	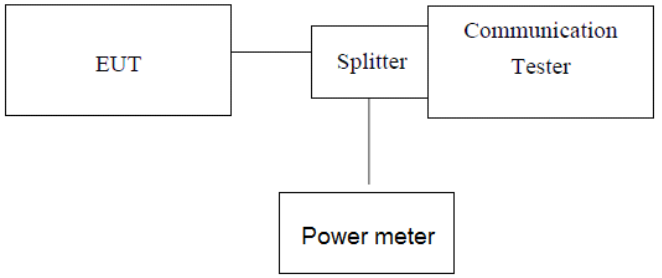 *Note: Measurement setup for testing on Antenna connector*
Test Procedure:	1. The transmitter output port was connected to base station. 2. The RF output of EUT was connected to the power meter by RF cable and attenuator, the path loss was compensated to the results for each measurement. 3. Set EUT at maximum power through base station. 4. Select lowest, middle, and highest channels for each band and different modulation. 5. Measure the maximum burst power. 6. EIRP=measured power+ antenna gain ERP=EIRP-2.15
Test Instruments:	Refer to section 5.0 for details
Test mode:	Refer to section 7.1 for details
Test results:	Pass

Measurement Data: The detailed test data see Appendix

7.4 Peak-to-Average Ratio

Test Requirement:	FCC part 24.232 & FCC part2.1046
Test Method:	FCC KDB 971168 D01 V03r01 Section
Limit:	13db
Test setup:	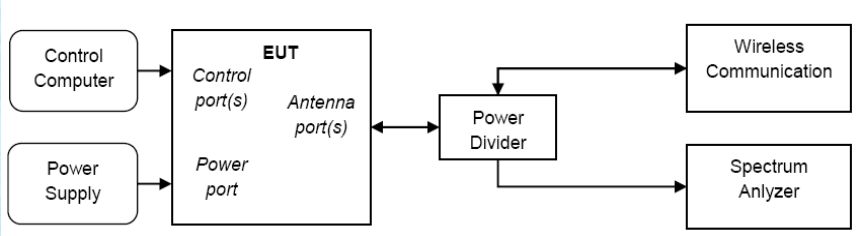
Test Procedure:	A peak to average ratio measurement is performed at the conducted port of the EUT. For WCDMA signals, the spectrum analyzers Complementary Cumulative Distribution Function (CCDF) measurement profile is used to determine the largest deviation between the average and the peak power of the EUT in a given bandwidth. The CCDF curve shows how much time the peak waveform spends at or above a given average power level. The percent of time the signal spends at or above the level defines the probability for that particular power level. For GSM signals, an average and a peak trace are used on a spectrum analyzer to determine the largest deviation between the average and the peak power of the EUT in a bandwidth greater than the emission bandwidth. The traces are generated with the spectrum analyzer set to zero span mode. **Test Settings** 1. The signal analyzer's CCDF measurement profile enabled 2. Frequency= carrier center frequency 3. Measurement BW > EBW of signal 4. for continuous transmissions, set to 1ms 5. Record the maximum PAPR level associated with a probability of 0.1%.
Test Instruments:	Refer to section 5.0 for details
Test mode:	Refer to section 6.1 for details
Test results:	Pass

Measurement Data: The detailed test data see Appendix

7.5 Occupy Bandwidth

Test Requirement:	FCC part2.1049
Test Method:	FCC KDB 971168 D01 V03r01 Section
Test setup:	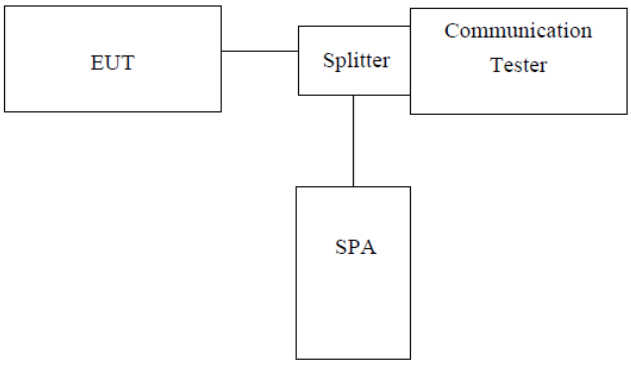 *Note: Measurement setup for testing on Antenna connector*
Test Procedure:	1. The EUT's output RF connector was connected with a short cable to the spectrum analyzer 2. RBW was set to about 1% of emission BW, VBW= 3 times RBW. 3. -26dBc display line was placed on the screen (or 99% bandwidth), the occupied bandwidth is the delta frequency between the two points where the display line intersects the signal trace.
Test Instruments:	Refer to section 5.0 for details
Test mode:	Refer to section 6.1 for details
Test results:	Pass

Measurement Data: The detailed test data see Appendix

7.6 MODULATION CHARACTERISTIC

According to FCC § 2.1047(d), Part 22H & 24E there is no specific requirement for digital modulation, therefore modulation characteristic is not presented.

7.7 Out of band emission at antenna terminals

Test Requirement:	FCC part 22.917 and FCC part 24.238 & FCC part2.1051
Test Method:	FCC KDB 971168 D01 V03r01 Section
Limit:	-13dBm
Test setup:	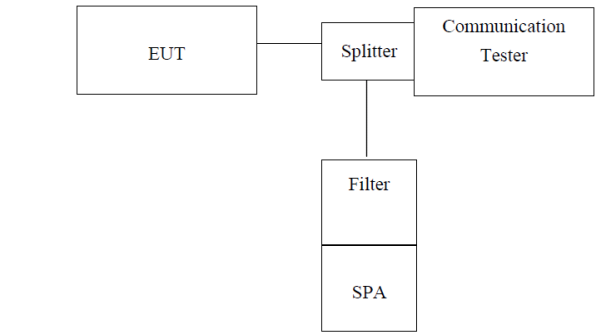 ***Note:*** *Measurement setup for testing on Antenna connector*
Test Procedure:	1 The RF output of the transceiver was connected to a spectrum analyzer through appropriate attenuation. 2 The resolution bandwidth of the spectrum analyzer was set at 1MHz, sufficient scans were taken to show the out of band Emissions if any up to 10th harmonic. 3 For the out of band: Set the RBW, VBW = 1MHz, Start=30MHz, Stop= 10th harmonic. 4 Band Edge Requirements: In the 1 MHz bands immediately outside and adjacent to the frequency block, a resolution bandwidth of at least 1 percent of the emission bandwidth of the fundamental emission of the transmitter may be employed to measure the out of band Emissions.
Test Instruments:	Refer to section 5.0 for details
Test mode:	Refer to section 6.1 for details
Test results:	Pass

Measurement Data: The detailed test data see Appendix

7.8 Spurious Radiation Emissions

Test Requirement:	FCC part 2.1053 & FCC part 22.917 & FCC part 24.238
Test Method:	FCC KDB 971168 D01 V03r01 Section & ANSI C63.26:2015
Test setup:	Below 1GHz 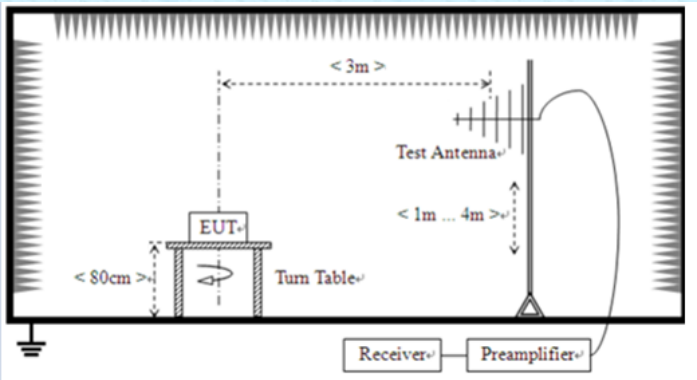 Above 1GHz 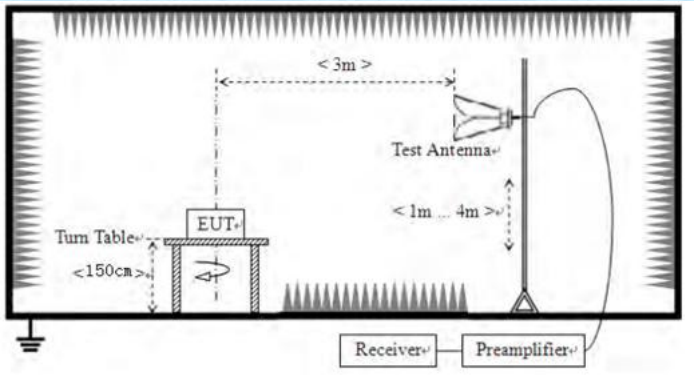 Substituted method: 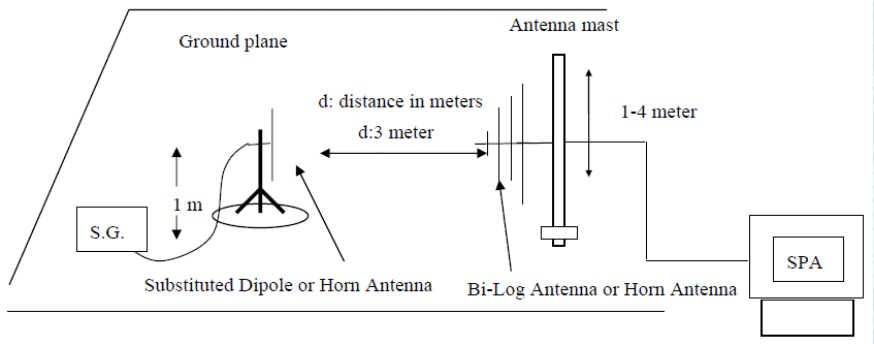
Test Instruments:	Refer to section 6.0 for details
Test mode:	Refer to section 7.1 for details
Test results:	Pass

Measurement Data

Below 1GHz

WCDMA Band II （Lowest channel）

Frequency (MHz)	Read Level (dBuV)	Antenna Factor (dB/m)	Cable Loss (dB)	Preamp Factor (dB)	Level (dBuV/m)	Limit Line (dBuV/m)	Over Limit (dB)	Polarity
68.63	-55.73	21.65	0.93	30.00	-63.15	-13.00	-50.15	Vertical
88.03	-60.86	25.13	1.09	30.00	-64.64	-13.00	-51.64	Vertical
106.01	-66.36	25.13	1.25	30.00	-69.98	-13.00	-56.98	Vertical
166.07	-57.13	22.36	1.66	30.00	-63.11	-13.00	-50.11	Vertical
216.02	-69.00	24.55	1.93	30.00	-72.52	-13.00	-59.52	Vertical
356.68	-74.85	27.07	2.65	30.00	-75.13	-13.00	-62.13	Vertical
44.12	-78.35	25.44	0.71	30.00	-82.20	-13.00	-69.20	Horizontal
87.73	-70.57	25.13	1.09	30.00	-74.35	-13.00	-61.35	Horizontal
185.14	-63.05	22.36	1.77	30.00	-68.92	-13.00	-55.92	Horizontal
263.82	-71.26	25.71	2.19	30.00	-73.36	-13.00	-60.36	Horizontal
411.82	-73.38	28.16	2.91	30.00	-72.31	-13.00	-59.31	Horizontal
704.23	-76.32	32.08	4.10	30.00	-70.14	-13.00	-57.14	Horizontal

WCDMA Band II （Middle channel）

Frequency (MHz)	Read Level (dBuV)	Antenna Factor (dB/m)	Cable Loss (dB)	Preamp Factor (dB)	Level (dBuV/m)	Limit Line (dBuV/m)	Over Limit (dB)	Polarity
84.41	-59.81	21.65	1.07	30.00	-67.09	-13.00	-54.09	Vertical
90.22	-63.31	25.13	1.11	30.00	-67.07	-13.00	-54.07	Vertical
104.17	-69.07	25.13	1.23	30.00	-72.71	-13.00	-59.71	Vertical
167.82	-62.77	22.36	1.67	30.00	-68.74	-13.00	-55.74	Vertical
216.02	-69.64	24.55	1.93	30.00	-73.16	-13.00	-60.16	Vertical
266.61	-72.55	25.71	2.21	30.00	-74.63	-13.00	-61.63	Vertical
51.48	-73.00	25.44	0.79	30.00	-76.77	-13.00	-63.77	Horizontal
80.08	-66.28	21.65	1.03	30.00	-73.60	-13.00	-60.60	Horizontal
88.34	-69.21	25.13	1.10	30.00	-72.98	-13.00	-59.98	Horizontal
165.49	-54.46	22.36	1.66	30.00	-60.44	-13.00	-47.44	Horizontal
264.75	-66.82	25.71	2.19	30.00	-68.92	-13.00	-55.92	Horizontal
414.72	-72.06	28.55	2.92	30.00	-70.59	-13.00	-57.59	Horizontal

WCDMA Band II （Highest channel）

Frequency (MHz)	Read Level (dBuV)	Antenna Factor (dB/m)	Cable Loss (dB)	Preamp Factor (dB)	Level (dBuV/m)	Limit Line (dBuV/m)	Over Limit (dB)	Polarity
58.41	-67.42	25.44	0.85	30.00	-71.13	-13.00	-58.13	Vertical
66.73	-58.57	21.65	0.91	30.00	-66.01	-13.00	-53.01	Vertical
87.42	-54.07	21.65	1.09	30.00	-61.33	-13.00	-48.33	Vertical
169.01	-58.43	22.36	1.68	30.00	-64.39	-13.00	-51.39	Vertical
216.02	-70.14	24.55	1.93	30.00	-73.66	-13.00	-60.66	Vertical
261.98	-73.30	25.13	2.18	30.00	-75.99	-13.00	-62.99	Vertical
79.52	-64.17	21.65	1.02	30.00	-71.50	-13.00	-58.50	Horizontal
83.82	-65.65	21.65	1.06	30.00	-72.94	-13.00	-59.94	Horizontal
169.01	-51.89	22.36	1.68	30.00	-57.85	-13.00	-44.85	Horizontal
264.75	-65.44	25.71	2.19	30.00	-67.54	-13.00	-54.54	Horizontal
413.27	-74.97	28.55	2.92	30.00	-73.50	-13.00	-60.50	Horizontal
687.15	-77.55	32.08	4.05	30.00	-71.42	-13.00	-58.42	Horizontal

WCDMA Band V （Lowest channel）

Frequency (MHz)	Read Level (dBuV)	Antenna Factor (dB/m)	Cable Loss (dB)	Preamp Factor (dB)	Level (dBuV/m)	Limit Line (dBuV/m)	Over Limit (dB)	Polarity
76.78	-60.60	21.65	1.00	30.00	-67.95	-13.00	-54.95	Vertical
88.65	-60.36	25.13	1.10	30.00	-64.13	-13.00	-51.13	Vertical
104.90	-68.12	25.13	1.23	30.00	-71.76	-13.00	-58.76	Vertical
151.60	-63.50	21.23	1.58	30.00	-70.69	-13.00	-57.69	Vertical
169.01	-58.72	22.36	1.68	30.00	-64.68	-13.00	-51.68	Vertical
216.02	-70.25	24.55	1.93	30.00	-73.77	-13.00	-60.77	Vertical
77.05	-64.81	21.65	1.00	30.00	-72.16	-13.00	-59.16	Horizontal
88.34	-67.26	25.13	1.10	30.00	-71.03	-13.00	-58.03	Horizontal
166.07	-52.61	22.36	1.66	30.00	-58.59	-13.00	-45.59	Horizontal
264.75	-62.71	25.71	2.19	30.00	-64.81	-13.00	-51.81	Horizontal
414.72	-72.73	28.55	2.92	30.00	-71.26	-13.00	-58.26	Horizontal
570.61	-76.50	31.11	3.60	30.00	-71.79	-13.00	-58.79	Horizontal

WCDMA Band V （Middle channel）

Frequency (MHz)	Read Level (dBuV)	Antenna Factor (dB/m)	Cable Loss (dB)	Preamp Factor (dB)	Level (dBuV/m)	Limit Line (dBuV/m)	Over Limit (dB)	Polarity
87.42	-57.96	21.65	1.09	30.00	-65.22	-13.00	-52.22	Vertical
103.44	-68.17	25.13	1.22	30.00	-71.82	-13.00	-58.82	Vertical
142.82	-66.60	21.23	1.52	30.00	-73.85	-13.00	-60.85	Vertical
176.27	-61.37	22.36	1.72	30.00	-67.29	-13.00	-54.29	Vertical
216.02	-70.08	24.55	1.93	30.00	-73.60	-13.00	-60.60	Vertical
268.49	-72.61	25.71	2.21	30.00	-74.69	-13.00	-61.69	Vertical
79.80	-65.47	21.65	1.03	30.00	-72.79	-13.00	-59.79	Horizontal
88.03	-67.78	25.13	1.09	30.00	-71.56	-13.00	-58.56	Horizontal
166.07	-52.85	22.36	1.66	30.00	-58.83	-13.00	-45.83	Horizontal
264.75	-66.22	25.71	2.19	30.00	-68.32	-13.00	-55.32	Horizontal
417.64	-75.62	28.55	2.93	30.00	-74.14	-13.00	-61.14	Horizontal
576.64	-75.99	31.11	3.63	30.00	-71.25	-13.00	-58.25	Horizontal

WCDMA Band V （Highest channel）

Frequency (MHz)	Read Level (dBuV)	Antenna Factor (dB/m)	Cable Loss (dB)	Preamp Factor (dB)	Level (dBuV/m)	Limit Line (dBuV/m)	Over Limit (dB)	Polarity
69.60	-58.79	21.65	0.94	30.00	-66.20	-13.00	-53.20	Vertical
77.32	-58.21	21.65	1.01	30.00	-65.55	-13.00	-52.55	Vertical
87.42	-55.71	21.65	1.09	30.00	-62.97	-13.00	-49.97	Vertical
144.34	-61.15	21.23	1.53	30.00	-68.39	-13.00	-55.39	Vertical
169.01	-57.83	22.36	1.68	30.00	-63.79	-13.00	-50.79	Vertical
181.28	-59.79	22.36	1.75	30.00	-65.68	-13.00	-52.68	Vertical
79.52	-64.76	21.65	1.02	30.00	-72.09	-13.00	-59.09	Horizontal
90.22	-69.53	25.13	1.11	30.00	-73.29	-13.00	-60.29	Horizontal
167.82	-52.77	22.36	1.67	30.00	-58.74	-13.00	-45.74	Horizontal
261.98	-65.22	25.13	2.18	30.00	-67.91	-13.00	-54.91	Horizontal
451.14	-77.27	28.93	3.09	30.00	-75.25	-13.00	-62.25	Horizontal
649.66	-76.87	31.82	3.91	30.00	-71.14	-13.00	-58.14	Horizontal

Above 1GHz

WCDMA Band II （Lowest channel）

Frequency (MHz)	Read Level (dBuV)	Antenna Factor (dB/m)	Cable Loss (dB)	Preamp Factor (dB)	Level (dBuV/m)	Limit Line (dBuV/m)	Over Limit (dB)	Polarity
1787.25	-59.63	40.90	9.44	38.56	-47.85	-13.00	-34.85	Vertical
2880.00	-60.81	42.07	11.90	38.60	-45.44	-13.00	-32.44	Vertical
3420.50	-60.56	42.78	14.10	38.51	-42.19	-13.00	-29.19	Vertical
4384.00	-63.36	44.25	16.19	38.28	-41.20	-13.00	-28.20	Vertical
5582.50	-64.86	46.75	19.06	38.62	-37.67	-13.00	-24.67	Vertical
6675.25	-62.51	48.81	22.69	38.84	-29.85	-13.00	-16.85	Vertical
2233.75	-61.71	41.38	10.54	38.50	-48.29	-13.00	-35.29	Horizontal
3573.25	-61.81	42.97	14.29	38.45	-43.00	-13.00	-30.00	Horizontal
4419.25	-64.93	44.28	16.27	38.28	-42.66	-13.00	-29.66	Horizontal
4948.00	-65.56	45.18	17.35	38.39	-41.42	-13.00	-28.42	Horizontal
6287.50	-65.25	48.17	22.42	38.76	-33.42	-13.00	-20.42	Horizontal
8061.75	-64.69	51.49	25.36	42.22	-30.06	-13.00	-17.06	Horizontal

WCDMA Band II （Middle channel）

Frequency (MHz)	Read Level (dBuV)	Antenna Factor (dB/m)	Cable Loss (dB)	Preamp Factor (dB)	Level (dBuV/m)	Limit Line (dBuV/m)	Over Limit (dB)	Polarity
1810.75	-60.94	40.92	9.51	38.54	-49.05	-13.00	-36.05	Vertical
3044.50	-60.50	42.24	12.35	38.59	-44.50	-13.00	-31.50	Vertical
3714.25	-63.69	43.16	14.56	38.37	-44.34	-13.00	-31.34	Vertical
4854.00	-64.81	45.01	17.05	38.37	-41.12	-13.00	-28.12	Vertical
5617.75	-65.02	46.80	19.13	38.62	-37.71	-13.00	-24.71	Vertical
6510.75	-65.06	48.55	22.55	38.81	-32.77	-13.00	-19.77	Vertical
1810.75	-60.24	40.92	9.51	38.54	-48.35	-13.00	-35.35	Horizontal
2997.50	-62.17	42.18	12.23	38.60	-46.36	-13.00	-33.36	Horizontal
3679.00	-62.24	43.10	14.49	38.39	-43.04	-13.00	-30.04	Horizontal
4807.00	-64.81	44.93	16.90	38.36	-41.34	-13.00	-28.34	Horizontal
5406.25	-66.01	46.25	18.58	38.56	-39.74	-13.00	-26.74	Horizontal
6428.50	-63.66	48.40	22.46	38.79	-31.59	-13.00	-18.59	Horizontal

WCDMA Band II （Highest channel）

Frequency (MHz)	Read Level (dBuV)	Antenna Factor (dB/m)	Cable Loss (dB)	Preamp Factor (dB)	Level (dBuV/m)	Limit Line (dBuV/m)	Over Limit (dB)	Polarity
1705.00	-60.22	40.80	8.93	38.62	-49.11	-13.00	-36.11	Vertical
2739.00	-61.15	41.94	11.65	38.60	-46.16	-13.00	-33.16	Vertical
3573.25	-60.54	42.97	14.29	38.45	-41.73	-13.00	-28.73	Vertical
4395.75	-63.20	44.25	16.23	38.28	-41.00	-13.00	-28.00	Vertical
6311.00	-63.16	48.21	22.42	38.77	-31.30	-13.00	-18.30	Vertical
6769.25	-64.33	48.96	22.74	38.86	-31.49	-13.00	-18.49	Vertical
2186.75	-60.72	41.34	10.47	38.48	-47.39	-13.00	-34.39	Horizontal
3526.25	-59.74	42.91	14.23	38.48	-41.08	-13.00	-28.08	Horizontal
4830.50	-65.50	44.99	16.98	38.37	-41.90	-13.00	-28.90	Horizontal
5958.50	-64.49	47.61	20.37	38.69	-35.20	-13.00	-22.20	Horizontal
7286.25	-63.00	50.00	23.79	39.89	-29.10	-13.00	-16.10	Horizontal
8355.50	-61.98	51.73	26.38	42.31	-26.18	-13.00	-13.18	Horizontal

WCDMA Band V （Lowest channel）

Frequency (MHz)	Read Level (dBuV)	Antenna Factor (dB/m)	Cable Loss (dB)	Preamp Factor (dB)	Level (dBuV/m)	Limit Line (dBuV/m)	Over Limit (dB)	Polarity
1881.25	-59.75	40.97	9.43	38.49	-47.84	-13.00	-34.84	Vertical
2680.25	-61.20	41.86	11.61	38.60	-46.33	-13.00	-33.33	Vertical
3244.25	-60.46	42.56	13.02	38.55	-43.43	-13.00	-30.43	Vertical
4113.75	-64.86	43.73	15.39	38.22	-43.96	-13.00	-30.96	Vertical
5171.25	-65.95	45.71	18.15	38.47	-40.56	-13.00	-27.56	Vertical
7098.25	-64.06	49.56	23.39	39.24	-30.35	-13.00	-17.35	Vertical
2186.75	-60.92	41.34	10.47	38.48	-47.59	-13.00	-34.59	Horizontal
3655.50	-62.23	43.07	14.44	38.40	-43.12	-13.00	-30.12	Horizontal
4395.75	-63.70	44.25	16.23	38.28	-41.50	-13.00	-28.50	Horizontal
5453.25	-65.66	46.39	18.71	38.58	-39.14	-13.00	-26.14	Horizontal
6839.75	-64.29	49.08	22.91	38.87	-31.17	-13.00	-18.17	Horizontal
7509.50	-63.72	50.49	24.94	40.64	-28.93	-13.00	-15.93	Horizontal

WCDMA Band V （Middle channel）

Frequency (MHz)	Read Level (dBuV)	Antenna Factor (dB/m)	Cable Loss (dB)	Preamp Factor (dB)	Level (dBuV/m)	Limit Line (dBuV/m)	Over Limit (dB)	Polarity
2210.25	-60.22	41.34	10.55	38.49	-46.82	-13.00	-33.82	Vertical
3502.75	-61.29	42.88	14.20	38.50	-42.71	-13.00	-29.71	Vertical
3855.25	-62.79	43.32	14.84	38.28	-42.91	-13.00	-29.91	Vertical
4748.25	-64.82	44.85	16.78	38.35	-41.54	-13.00	-28.54	Vertical
5864.50	-63.25	47.38	19.77	38.67	-34.77	-13.00	-21.77	Vertical
6546.00	-64.15	48.59	22.58	38.81	-31.79	-13.00	-18.79	Vertical
1916.50	-60.13	41.02	9.39	38.46	-48.18	-13.00	-35.18	Horizontal
2762.50	-61.11	41.97	11.66	38.60	-46.08	-13.00	-33.08	Horizontal
3761.25	-64.63	43.22	14.66	38.34	-45.09	-13.00	-32.09	Horizontal
4419.25	-63.86	44.28	16.27	38.28	-41.59	-13.00	-28.59	Horizontal
5923.25	-64.18	47.47	20.14	38.69	-35.26	-13.00	-22.26	Horizontal
7521.25	-63.46	50.49	24.98	40.67	-28.66	-13.00	-15.66	Horizontal

WCDMA Band V （Highest channel）

Frequency (MHz)	Read Level (dBuV)	Antenna Factor (dB/m)	Cable Loss (dB)	Preamp Factor (dB)	Level (dBuV/m)	Limit Line (dBuV/m)	Over Limit (dB)	Polarity
1681.50	-60.09	40.77	8.79	38.64	-49.17	-13.00	-10.98	Vertical
3056.25	-61.51	42.24	12.38	38.59	-45.48	-13.00	-10.12	Vertical
4372.25	-63.42	44.22	16.15	38.28	-41.33	-13.00	-5.52	Vertical
5606.00	-64.19	46.75	19.12	38.62	-36.94	-13.00	-9.87	Vertical
7298.00	-63.42	50.00	23.87	39.93	-29.48	-13.00	-14.91	Vertical
8238.00	-63.58	51.62	25.66	42.27	-28.57	-13.00	-12.97	Vertical
2069.25	-61.52	41.19	9.73	38.43	-49.03	-13.00	-36.03	Horizontal
3209.00	-61.63	42.47	12.78	38.56	-44.94	-13.00	-31.94	Horizontal
4337.00	-64.41	44.17	16.04	38.27	-42.47	-13.00	-29.47	Horizontal
5241.75	-63.76	45.89	18.32	38.50	-38.05	-13.00	-25.05	Horizontal
5888.00	-64.81	47.43	19.92	38.68	-36.14	-13.00	-23.14	Horizontal
6792.75	-63.92	49.00	22.76	38.86	-31.02	-13.00	-18.02	Horizontal

Note:

1. *Final Level =Receiver Read level + Antenna Factor + Cable Loss – Preamplifier Factor*
2. *The emission levels of other frequencies are very lower than the limit and not show in test report.*

7.9 Frequency stability V.S. Temperature measurement

Test Requirement:	FCC part 22.355 and FCC part 24.235 and Part 27.54
Test Method:	FCC Part2.1055
Limit:	±2.5ppm
Test setup:	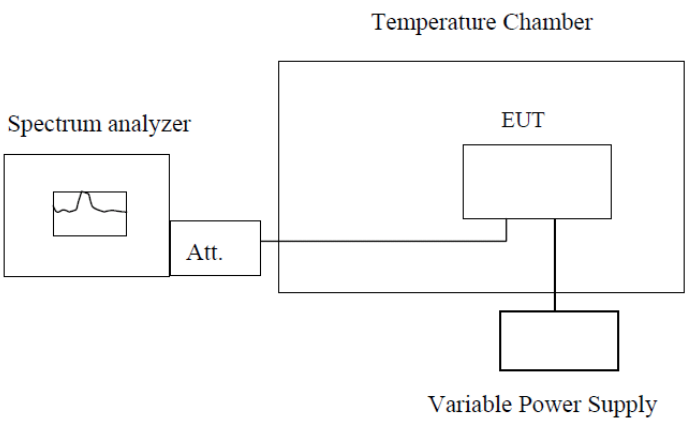 **Note :** Measurement setup for testing on Antenna connector
Test procedure:	1. The equipment under test was connected to an external DC power supply and input rated voltage. 2. RF output was connected to a frequency counter or spectrum analyzer via feed through attenuators. 3. The EUT was placed inside the temperature chamber. 4. Set the spectrum analyzer RBW low enough to obtain the desired frequency resolution and measure EUT 25°C operating frequency as reference frequency. 5. Turn EUT off and set the chamber temperature to –20°C. After the temperature stabilized for approximately 30 minutes recorded the frequency. 6. Repeat step measure with 10°C increased per stage until the highest temperature of +50°C reached.
Test Instruments:	Refer to section 5.0 for details
Test mode:	Refer to section 6.1 for details
Test results:	Pass

Measurement Data: The detailed test data see Appendix

7.10 Frequency stability V.S. Voltage measurement

Test Requirement:	FCC part 22.355 and FCC part 24.235
Test Method:	FCC Part2.1055
Limit:	±2.5ppm
Test setup:	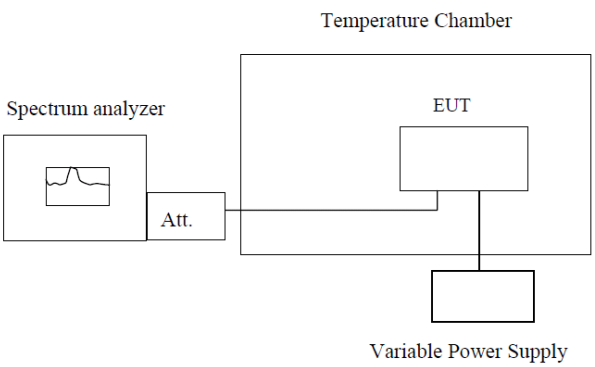 **Note :** Measurement setup for testing on Antenna connector
Test procedure:	1. Set chamber temperature to 25°C. Use a variable DC power source to power the EUT and set the voltage to rated voltage. 2. Set the spectrum analyzer RBW low enough to obtain the desired frequency resolution and recorded the frequency. 3. Reduce the input voltage to specified extreme voltage variation (+/- 15%) and endpoint, record the maximum frequency change.
Test Instruments:	Refer to section 5.0 for details
Test mode:	Refer to section 6.1 for details
Test results:	Pass

Measurement Data: The detailed test data see Appendix

8 Test Setup Photo

Reference to the **appendix I** for details.

9 EUT Constructional Details

Reference to the **appendix II** for details.

------End------