❹ Plug the phone cord into the phone jack on the wall.

❺ Hang the bracket on the phone wall plate.

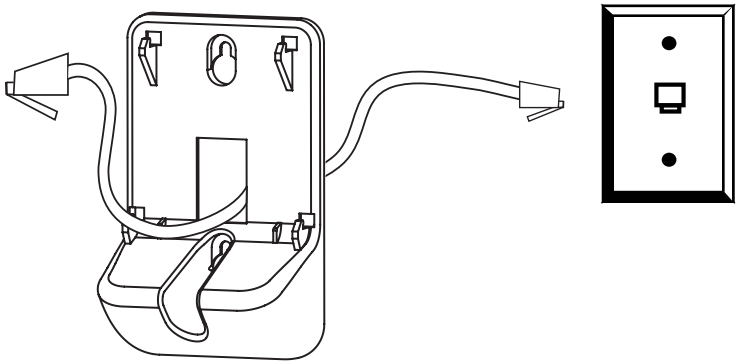

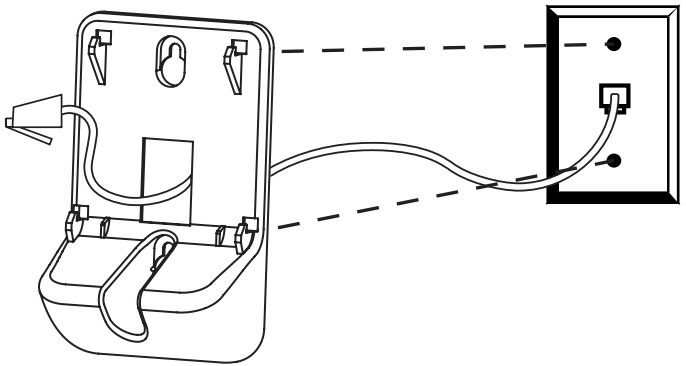

❻ Plug the other end of the phone cord into the jack on the back of the base.

❼ Plug the power cord into a power outlet if it is not already plugged in.

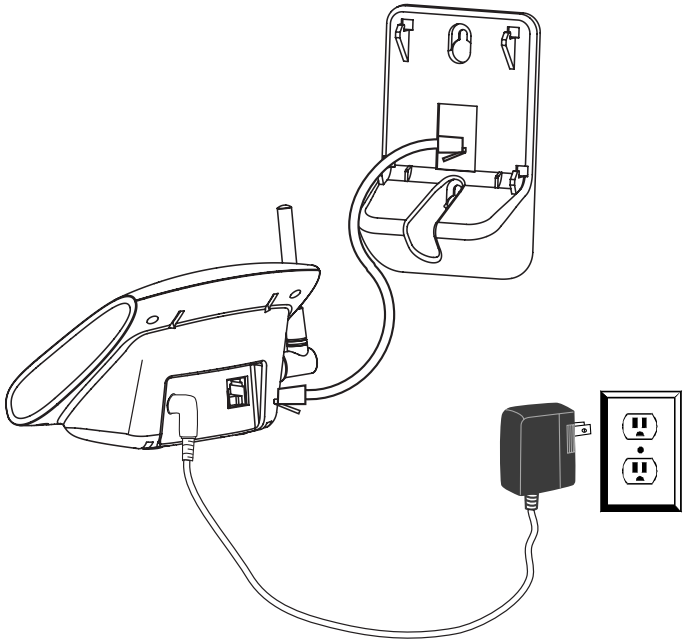

❽ Insert the four tabs on the wall mount into the four slots on the back of the base then push down.

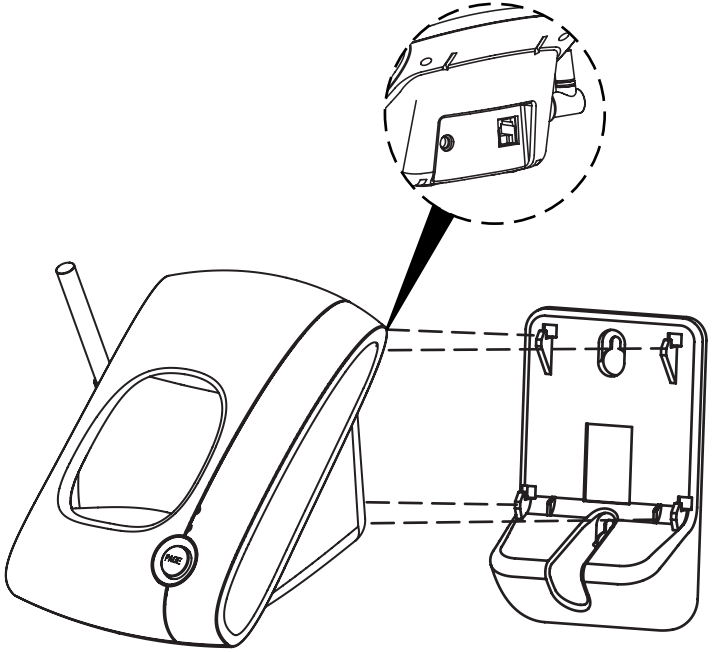

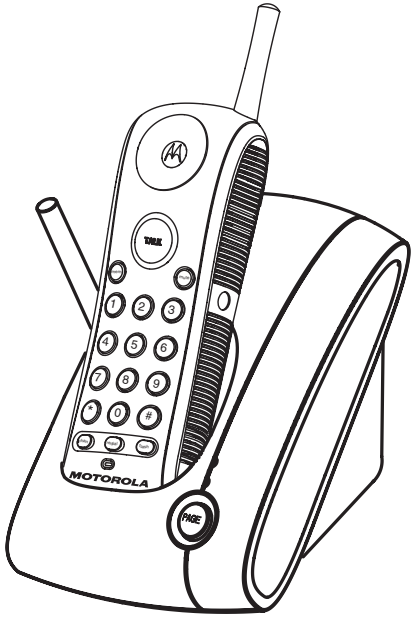

Setting Tone or Pulse

❶ Press **flash**.

❷ Press: * for tone operation or
for pulse operation

❸ Press **flash**.

Tip: If you select pulse, you can still use touch tone menu systems. To activate tone temporarily for one call, press the * key.

Setting the Ringer Tone

❶ Press **flash**.

❷ Press: 1 Ring tone 1
2abc Ring tone 2

❸ Press **flash**.

Now that you have set up your phone, read the next section of this guide for information on how to make calls and store phone numbers in memory.

CAUTION

The long-term characteristics or the possible physiological effects of Radio Frequency (RF) electromagnetic fields have not been evaluated by UL.

If you are concerned with the risk of RF exposure, you may want to limit the duration of calls and position the antenna as far away from your body as is practical.

How to Use

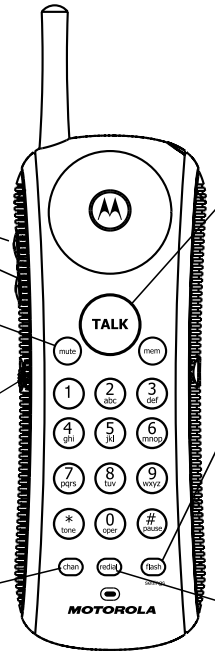

Adjust handset volume

Mute: Press to mute microphone (caller will not hear you). Press again to unmute.

Turn ringer on (up) and off (down)

Chan: Use if you hear interference or static

Talk: Make or answer a call, hang up

Flash: Use for call waiting and 3-way calling

Redial last called number (up to 32 digits)

How to Locate a Lost Handset

❶ Press **page** to find a lost handset.

❷ Follow the sound to locate the lost handset.

Tip: No need to hurry. The handset will not stop beeping until you press **page** again.

❸ Press **page** again to stop the beeping.

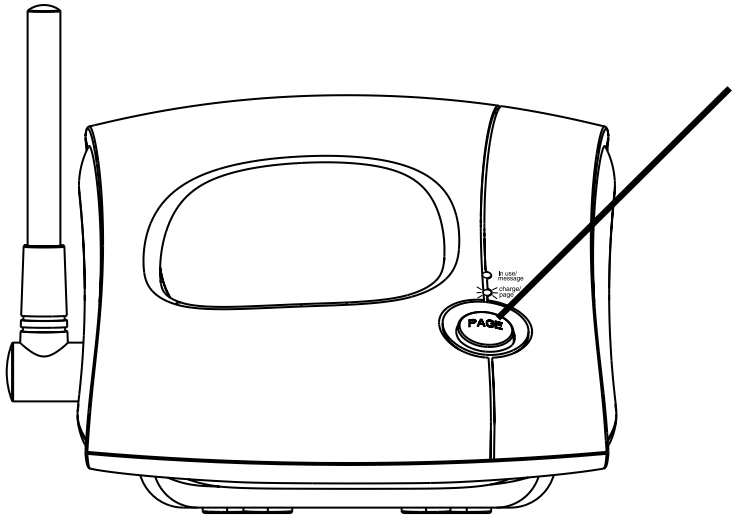

Press to page the person carrying the handset or to locate a lost handset. Press again to cancel the page (or press Talk on the handset).

Storing a Number into Memory

You can store 10 phone numbers into memory with up to 20 digits each.

❶ Turn the phone off.

❷ Press **mem**.

❸ Press any number key (0 oper through 9 wxyz) to select the memory location.

❹ Press **mem**.

❺ Enter the phone number you want to store, or press **redial** to store the last number you dialed.

❻ Press **mem**.

Tip: To insert a pause in the dial sequence (for example, if you have to dial “9” then wait for a dial tone), press the # key twice.

Dialing a Number from Memory

❶ Press TALK.

❷ Press **mem**.

❸ Press the number key (0 oper through 9 wxyz) to select the memory location of the phone number you want to call.

Tip: You can use your memory numbers to simplify calling card calls and other calls that require multiple strings of numbers.

For example, if you stored your calling card number in memory location 1, your calling card password in location 2, and the phone number you want to call in location 3, you would press the following keys to call the number in location 3:

TALK **mem** 1 **mem** 2 abc **mem** 3 def

Storing and Calling Emergency Numbers

When storing an emergency number (such as 911) into memory or making a test call to an emergency number stored in memory, remain on the line and briefly explain to the dispatcher the reason for the call. This should be performed in off-peak hours, such as early morning or late evening.

What to do if...

The phone doesn't work at all (no lights, no dial tone)	• Check the power and phone connections. Is the power cable plugged in at both ends? Phone cable? • Check the battery. Is it charged? Does it fit properly?
No dial tone	• Check the items listed above. • Move closer to the base. • Verify dial tone using another phone. If you have no dial tone on that phone, call your phone company. • Disconnect the phone and reconnect it at a different phone and power outlet.

You can't receive calls	• Check the battery. Is it charged? Does it fit properly? • Make sure the handset ringer is turned on. • Move closer to the base. • Unplug other phones. You may have too many phones on your telephone line to allow all of them to ring.

The signal is weak or has noise or static	• Press **chan** to select a different channel. • Check the battery and power. • Move closer to the base. • Move the base to a different power outlet (especially if the phone is sharing an outlet with an appliance).
You hear other calls on your line	• Press **chan** to select a different channel. • Hang up. Place the handset into the base. Wait 30 seconds then try again. • Disconnect the base from power and phone.

The battery won't charge	• Check the base. Is it properly connected? Are its contacts clean and dry? • Check the battery contacts. Make sure the battery is connected properly. • Is it an old battery? Replace the battery.
The battery loses charge faster than normal	• Is it a new battery? A new battery needs to be charged at least 12 hours before use to maintain normal talk time. • Is it an old battery? Replace the battery.

Motorola Limited Warranty for Consumer Products, Accessories, and Software Purchased in the United States or Canada

What Does this Warranty Cover?

Subject to the exclusions contained below, Motorola, Inc. warrants its telephones and consumer two-way radios that operate via Family Radio Service or General Mobile Radio Service (“Products”), Motorola-branded or certified accessories sold for use with these Products (“Accessories”) and Motorola software contained on CD-Roms or other tangible media and sold for use with these Products (“Software”) to be free from defects in materials and workmanship under normal consumer usage for the period(s) outlined below. This limited warranty is a consumer’s exclusive remedy, and applies as follows to new Motorola Products, Accessories and Software purchased by consumers in the United States or Canada, which are accompanied by this written warranty:

Products and Accessories as defined above, unless otherwise provided for below. Length of coverage: one (1) year from the date of purchase by the first consumer purchaser of the product unless otherwise provided for below.

- **Decorative Accessories and Cases.** Decorative covers, bezels, PhoneWrap™ covers and cases. Length of coverage: limited lifetime warranty for the lifetime of ownership by the first consumer purchaser of the product.
- **Monaural Headsets.** Ear buds and boom headsets that transmit mono sound through a wired connection. Length of coverage: limited lifetime warranty for the lifetime of ownership by the first consumer purchaser of the product.
- **Consumer Two-Way Radio Accessories.** Length of coverage: Ninety (90) days from the date of purchase by the first consumer purchaser of the product.

- **Products and Accessories that are Repaired or Replaced.** Length of coverage: The balance of the original warranty or for ninety (90) days from the date returned to the consumer, whichever is longer.

Software. Applies only to physical defects in the media that embodies the copy of the software (e.g. CD-ROM, or floppy disk). Length of coverage: ninety (90) days from the date of purchase.

Exclusions

Normal Wear and Tear. Periodic maintenance, repair and replacement of parts due to normal wear and tear are excluded from coverage.

Batteries. Only batteries whose fully charged capacity falls below 80% of their rated capacity and batteries that leak are covered by this limited warranty.

Abuse & Misuse. Defects or damage that result from: (a) improper operation, storage, misuse or abuse, accident or neglect, such as physical damage (cracks, scratches, etc.) to the surface of the product resulting from misuse; (b) contact with liquid, water, rain, extreme humidity or heavy perspiration, sand, dirt or the like, extreme heat, or food; (c) use of the Products or Accessories for commercial purposes or subjecting the Product or Accessory to abnormal usage or conditions; or (d) other acts which are not the fault of Motorola, are excluded from coverage.

Use of Non-Motorola Products and Accessories. Defects or damage that result from the use of Non-Motorola branded or certified Products, Accessories, Software or other peripheral equipment are excluded from coverage.

Unauthorized Service or Modification. Defects or damages resulting from service, testing, adjustment, installation, maintenance,

alteration, or modification in any way by someone other than Motorola, or its authorized service centers, are excluded from coverage.

Altered Products. Products or Accessories with (a) serial numbers or date tags that have been removed, altered or obliterated; (b) broken seals or that show evidence of tampering; (c) mismatched board serial numbers; or (d) nonconforming or non-Motorola housings, or parts, are excluded from coverage.

Communication Services. Defects, damages, or the failure of Products, Accessories or Software due to any communication service or signal you may subscribe to or use with the Products, Accessories or Software is excluded from coverage.

Software Embodied in Physical Media. No warranty is made that the software will meet your requirements or will work in combination with any hardware or software applications provided by third parties, that the operation of the software products will be uninterrupted or error free, or that all defects in the software products will be corrected.

Software NOT Embodied in Physical Media. Software that is not embodied in physical media (e.g. software that is downloaded from the internet), is provided **"as is" and without warranty.**

Who is Covered?

This warranty extends to the first end-user purchaser, only.

What will Motorola Do?

Motorola, at its option, will at no charge repair, replace or refund the purchase price of any Products, Accessories or Software that does not conform to this warranty. We may use functionally equivalent reconditioned/refurbished/pre-owned or new Products, Accessories or parts. No data, software or applications added to your Product, Accessory or Software, including but not limited to personal contacts, games and ringer tones, will be reinstalled. To avoid losing such data, software and applications please create a back up prior to requesting service.

How to Get Warranty Service or Other Information

In the USA, call:	In Canada, call:
1-800-353-2729	1-800-461-4575
TTY 1-888-390-6456	TTY 1-888-390-6456

For accessories and software, please call the telephone number designated above for the product with which they are used. You will receive instructions on how to ship the Products, Accessories or Software, at your expense, to a Motorola Authorized Repair Center.

To obtain service, you must include: (a) a copy of your receipt, bill of sale or other comparable proof of purchase; (b) a written description of the problem; (c) the name of your service provider, if applicable; (d) the name and location of the installation facility (if applicable) and, most importantly; (e) your address and telephone number.

What Other Limitations Are There?

ANY IMPLIED WARRANTIES, INCLUDING WITHOUT LIMITATION THE IMPLIED WARRANTIES OF MERCHANTABILITY AND FITNESS FOR A PARTICULAR PURPOSE, SHALL BE LIMITED TO THE DURATION OF THIS LIMITED WARRANTY, OTHERWISE THE REPAIR, REPLACEMENT, OR REFUND AS PROVIDED UNDER THIS EXPRESS LIMITED WARRANTY IS THE EXCLUSIVE REMEDY OF THE CONSUMER, AND IS PROVIDED IN LIEU OF ALL OTHER WARRANTIES, EXPRESS OF IMPLIED. IN NO EVENT SHALL MOTOROLA BE LIABLE, WHETHER IN CONTRACT OR TORT (INCLUDING NEGLIGENCE) FOR DAMAGES IN EXCESS OF THE PURCHASE PRICE OF THE PRODUCT, ACCESSORY OR SOFTWARE, OR FOR ANY INDIRECT, INCIDENTAL, SPECIAL OR CONSEQUENTIAL DAMAGES OF ANY KIND, OR LOSS OF REVENUE OR PROFITS, LOSS OF BUSINESS, LOSS OF INFORMATION OR DATA, SOFTWARE OR APPLICATIONS OR OTHER FINANCIAL LOSS ARISING OUT OF OR IN CONNECTION WITH THE ABILITY OR INABILITY TO USE THE PRODUCTS, ACCESSORIES OR SOFTWARE TO THE FULL EXTENT THESE DAMAGES MAY BE DISCLAIMED BY LAW.

Some states and jurisdictions do not allow the limitation or exclusion of incidental or consequential damages, or limitation on the length of an implied warranty, so the above limitations or exclusions may not apply to you. This warranty gives you specific legal rights, and you may also have other rights that vary from state to state or from one jurisdiction to another.

Laws in the United States and other countries preserve for Motorola certain exclusive rights for copyrighted Motorola software such as the exclusive rights to reproduce and distribute copies of the Motorola software. Motorola software may only be copied into, used in, and redistributed with, the Products associated with such Motorola software. No other use, including without limitation disassembly of such Motorola software or exercise of the exclusive rights reserved for Motorola, is permitted.

Notes

Notes

Notes

motorola.com

6881040B30-A