TrangoFOX™

Subscriber Unit

(for Access5830™ Wireless Broadband System)

User Manual

Overview

This manual covers basic configuration and installation of TrangoFOX Subscriber Units for the Access5830 Wireless Broadband System. The FOX series subscriber units are available three variations.

Model	Part #	Description
FOX5800	M5800S-FSU	5.8 GHz FOX SU with internal 15 dBi antenna
FOX5300	M5300S-FSU	5.3 GHz FOX SU with internal 15 dBi antenna
FOX5800-D	M5800S-FSU-D	5.8 GHz FOX SU for Reflector Dish Part# AD5800-25

TrangoFOX subscriber units work in conjunction with 5.8/5.3 GHz dual-band Access5830™ access points. The FOX5800 and FOX5800-D also work in conjunction with 5.8 GHz single-band Access5800™ access points.

Please refer to the Access5830 (or Access5800) user manual for detailed information on overall system implementation, configuration, and management of your point-to-multipoint system. The Access5830 User Manual also covers many important details of subscriber unit configuration.

FCC Information

This device complies with Part 15 of FCC Rules and Regulations. Operation is subject to the following two conditions: (1) This device may not cause harmful interference and (2) this device must accept any interference received, including interference that may cause undesired operation.

This equipment has been tested and found to comply with the limits for a Class B digital device, pursuant to Part 15 of the FCC Rules. These limits are designed to provide reasonable protection against harmful interference in a residential installation. This equipment generates, uses, and can radiate radio-frequency energy and, if not installed and used in accordance with these instructions, may cause harmful interference to radio communications. However, there is no guarantee that interference will not occur in any particular installation. If this equipment does cause harmful interference to radio or television reception, which can be determined by turning the equipment off and on, the user is encouraged to correct the interference by one of more of the following measures:

1) Reorient the antenna;
2) Increase the separation between the affected equipment and the unit;
3) Connect the affected equipment to a power outlet on a different circuit from that which the receiver is connected to;
4) Consult the dealer and/or experienced radio/TV technician for help.

FCC ID: NCYM5800SFSU
NCYM5800SFSUD
NCYM5300SFSU

Canada: to be announced soon

IMPORTANT NOTE:
Intentional or unintentional changes or modifications must not be made unless under the express consent of the party responsible for compliance. Any such modifications could void the user's authority to operate the equipment and will void the manufacturer's warranty. To comply with FCC RF exposure requirements, the following antenna installation and device operating configurations must be satisfied. The antenna for this unit must be fixed and mounted on outdoor permanent structures with a separation distance of at least two meters from all persons. Furthermore, it must not be co-located or operating in conjunction with any other antenna or transmitter.

Warranty Information

TrangoFOX Subscriber units are warranted for 90 days from date of purchase. Please see www.trangobroadband.com for complete description of warranty coverage and limitations.

Getting to Know Your Radio

Contents

Each Trango FOX subscriber unit comes equipped with the radio itself, a power-over-Ethernet (PoE) J-Box, an AC adapter, and mounting hardware. The FOX5800 and FOX5300 include hardware for wall or pole mounting. The FOX5800-D is equipped with a dish (reflector) mounting bracket.

Figure 1. Components of TrangoFOX Subscriber Unit

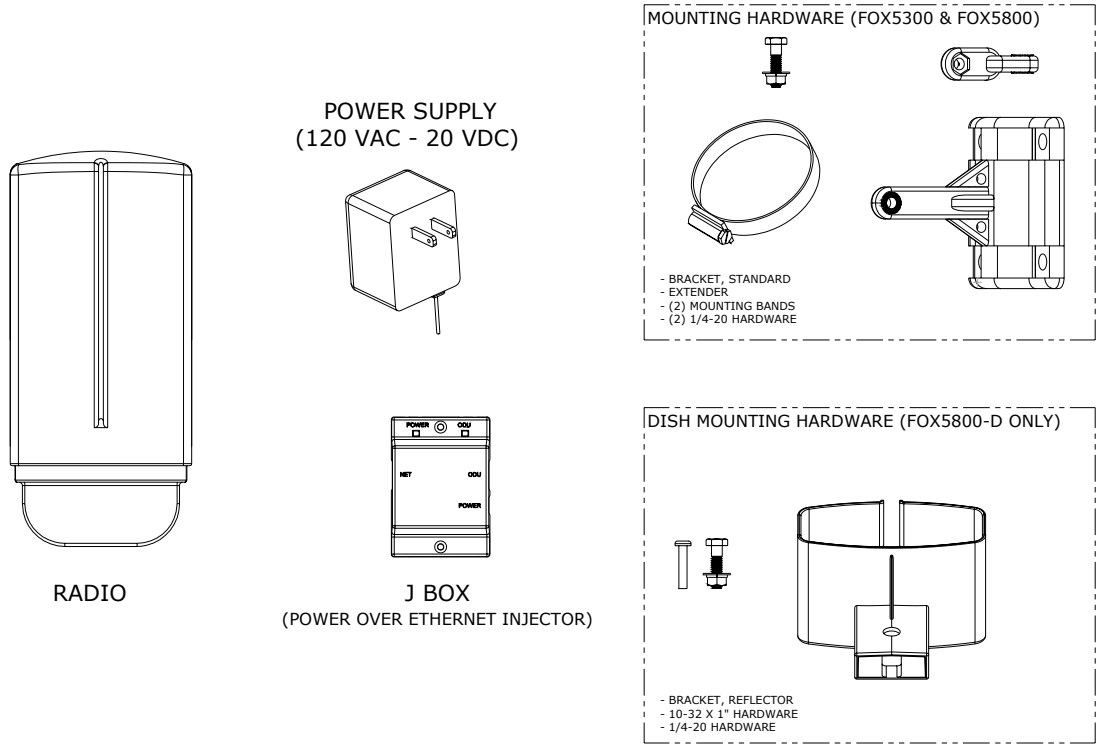

The radio's model number and FCC ID are located on the side of the radio.

Figure 2. Radio Side View

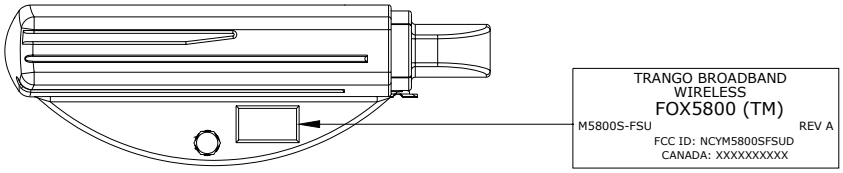

The TrangoFOX radio is equipped with a removable "boot" and weatherproofing foam insert. Removing the boot and foam insert reveals the radio's Ethernet port, LED status lights, reset button, MAC address, and serial number.

Figure 3. Exploded View of Radio, Foam Insert, and Boot

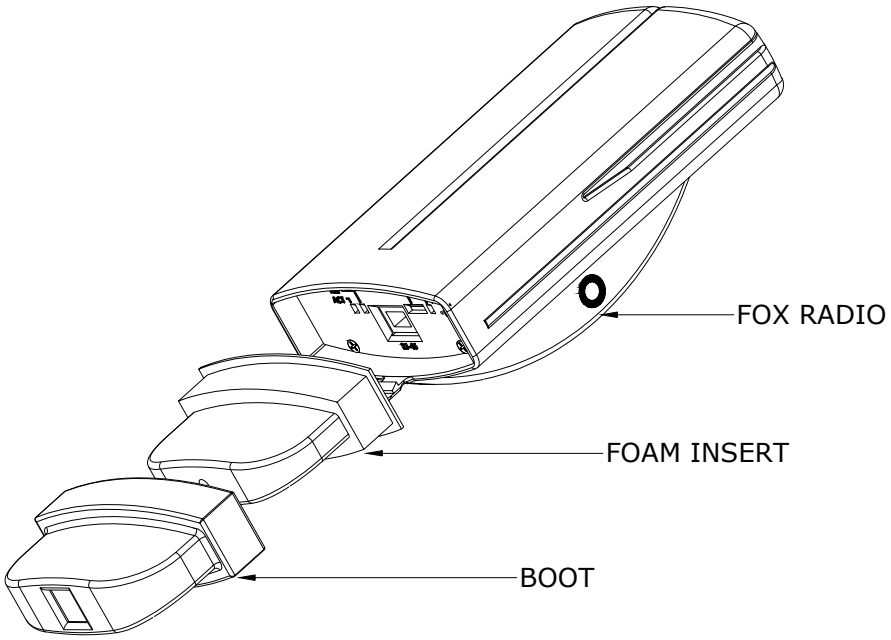

Figure 4. Bottom View (Boot Removed)

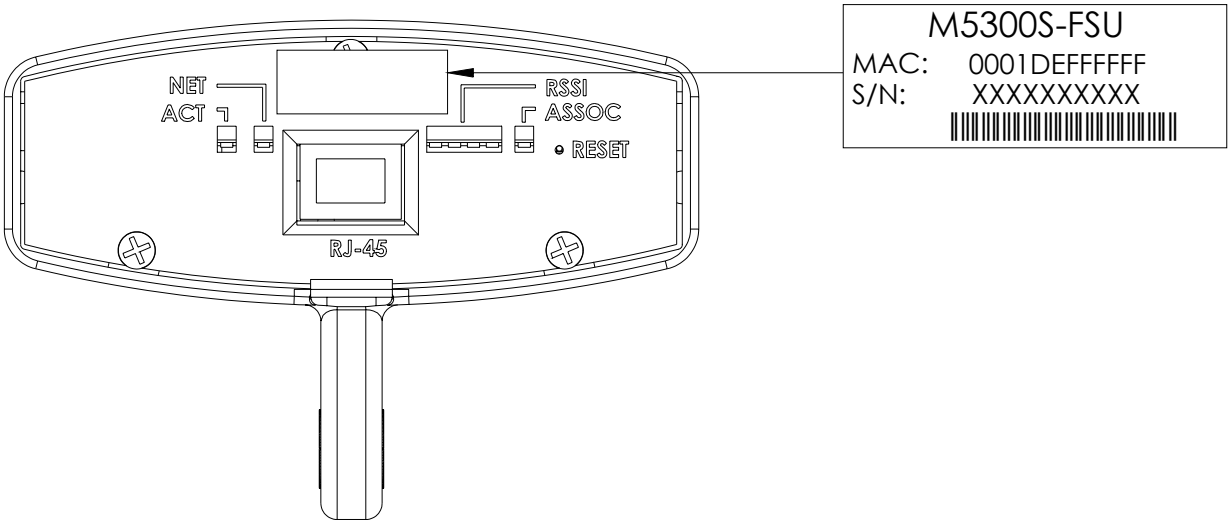

Getting Started

It is recommended to first provision and test the radio on the bench before deploying in the field. This is a particularly useful exercise to the novice user.

Connections and Power

- Remove the "boot" and Foam Insert from the bottom of the radio.
- Connect a Cat-5 (straight through) Ethernet cable (we recommend shielded twisted pair) between the ODU (out door unit) port of the J-box and the RJ-45 connector on the radio. Note that this cable will carry power over Ethernet (PoE).

- If connecting to a COMPUTER, use a Cross-Over Ethernet cable from the NET port of the J-box to the computer's Ethernet port.

  If connecting to a HUB, SWITCH, or ROUTER, use a Straight-Thru cable.

- Plug the AC adapter into an AC outlet.

Figure 5. Wiring Diagram

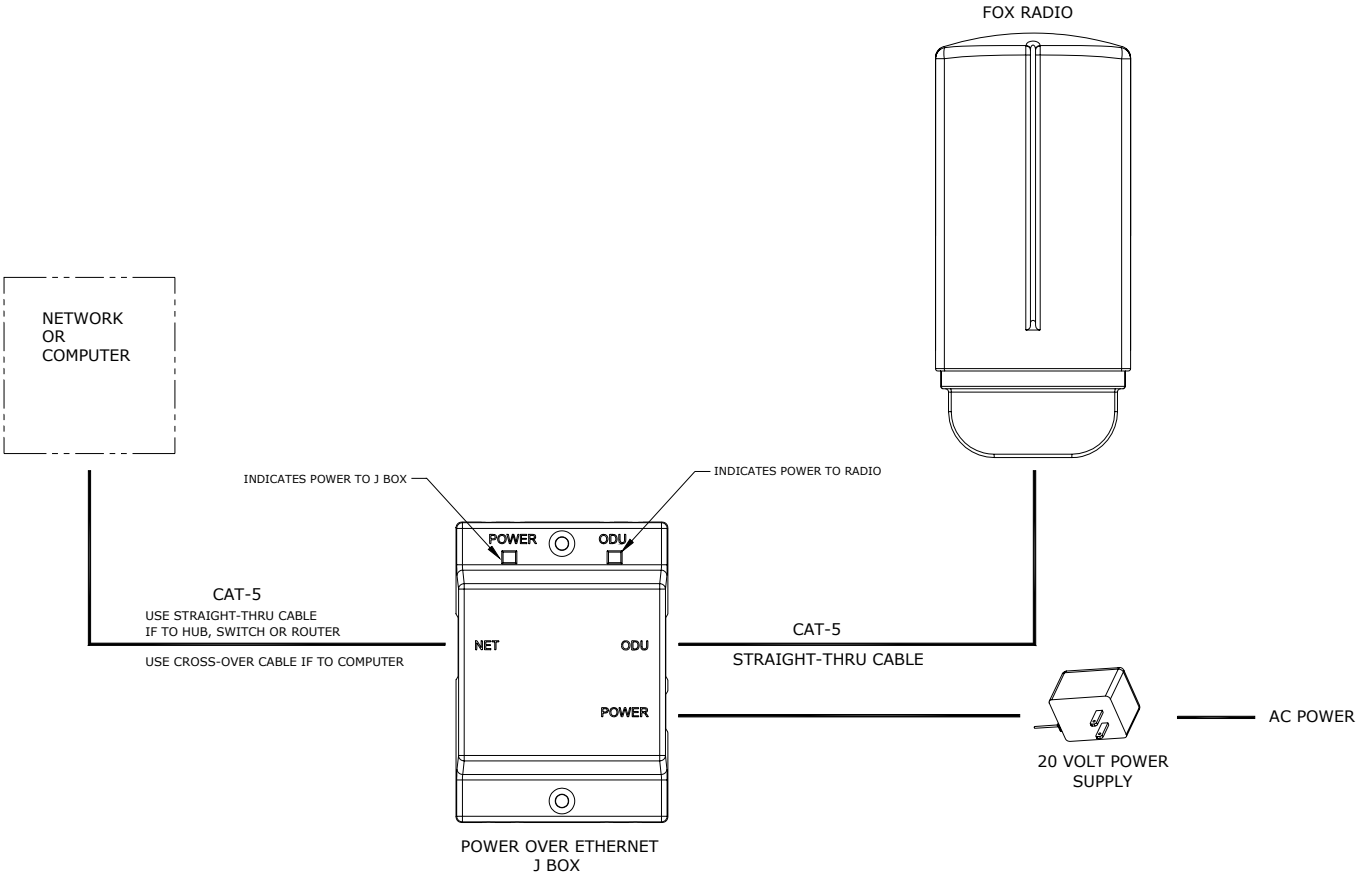

Once the radio is powered, check the LED lights on the bottom of the unit for status information. If the unit is powered, and not associated with an AP, the ASSOC light should be blinking. The NET LED will light if the unit is connected to a 100 Base-T Network.

Figure 6. Radio LEDs and Reset Button

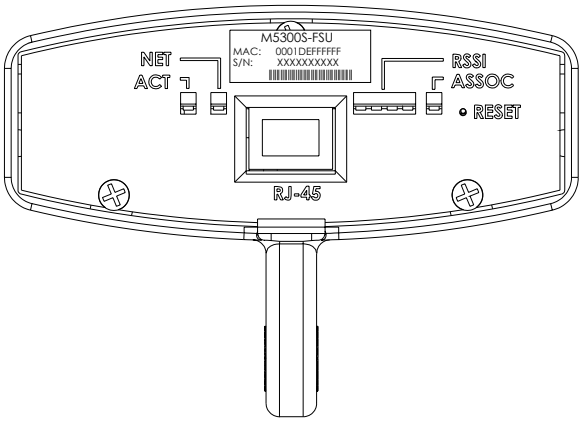

RESET BUTTON
Pressing the Reset Button (while the unit is powered) will restore the radio's factory default IP address and password. The Reset Button does NOT reset any other parameters.

LED Guide

ACT - Indicates Ethernet Receive/Transmit activity.

NET – This LED lights when connected to a 100 BaseT network. The LED remains unlit when connected to a 10 BaseT network

RSSI – Relative Signal Strength Indicator. See page 16 for more details.

ASSOC – This LED indicates one of four statuses:

1. Off - when there is no power at the radio.

2. Blinks once every second - unit is powered on but opmode is OFF.

3. Blinks twice per second - unit is in opmode SU and scanning for an AP

4. Solid On - unit is associated with an AP..

Basic Configuration

The TrangoFOX can be configured using either the Command Line Interface (CLI) or the Web Browser (HTTP) interface. This manual covers the basic HTTP screens from the radio's built in web server. For a more comprehensive description of the provisioning and management tools, as well as the complete command line interface reference guide, please see the Access5830 User Manual.

NOTE: The screenshots presented in this manual are from the FOX5800. Similar screenshots are available on the FOX5300 and FOX5800-D

Browser Interface

The Web browser interface is a powerful and easy-to-use configuration and management tool. Its functionality is a subset of the commands available in the CLI. To use the browser interface – you must have the following:

- An Ethernet connection between a PC and the radio
- Setup your Ethernet PC connection to the subnet that is routable to the radio (default IP address=**192.168.100.100**)
- A web browser (i.e. Microsoft Internet Explorer)

In order to use the browser interface – simply connect the radio to a PC, and type the radio's IP address into the web browser (i.e. Microsoft Internet Explorer). This will bring up a logon page.

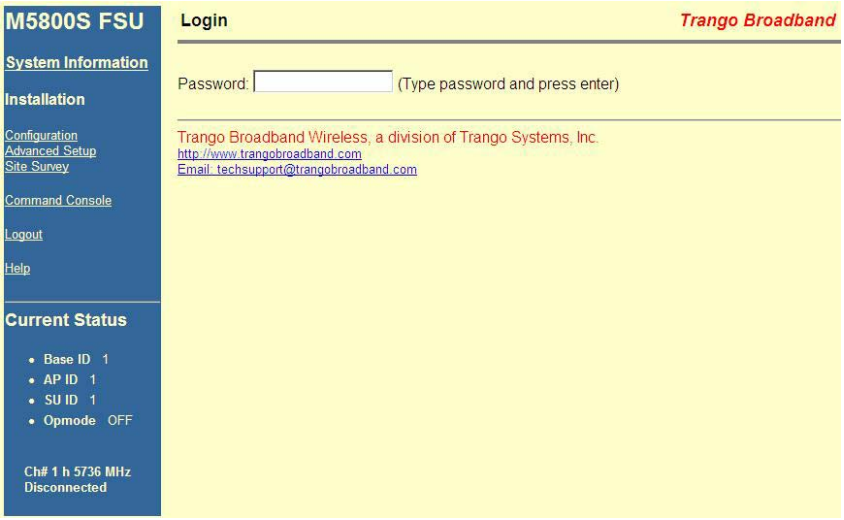

Current Status information is provided in the lower left-hand corner of on all screens. The Current Status shows Base ID, AP ID, SU ID, Current Opmode, Current Channel and polarization, and its RF link status to the AP(Connected or Disconnected).

Type the password (default **trango**) and continue. This will bring up the radio's system information page.

System Information

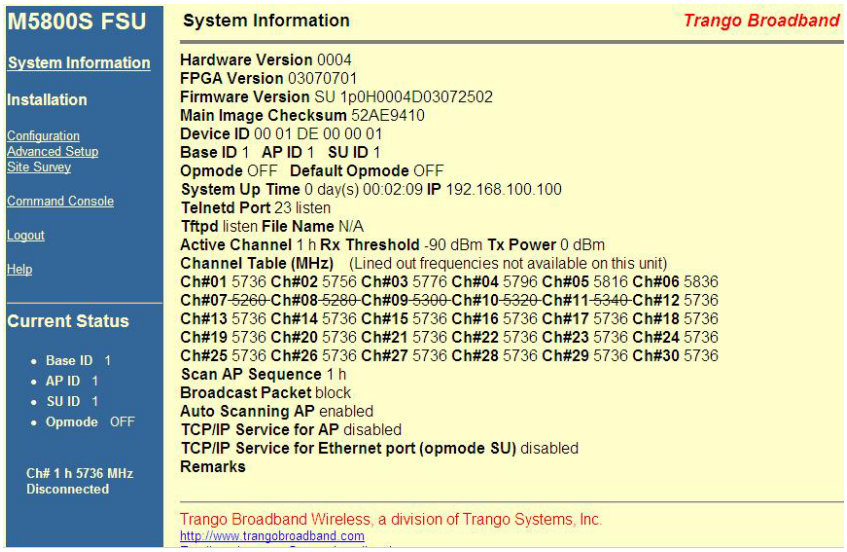

The Browser Interface features useful Help pages which explain all listed parameters. To access the help pages click on the Help link.

Configuration

Many of the parameters listed on the System Information page can be changed by the user. Click on Configuration page for user changeable parameters.

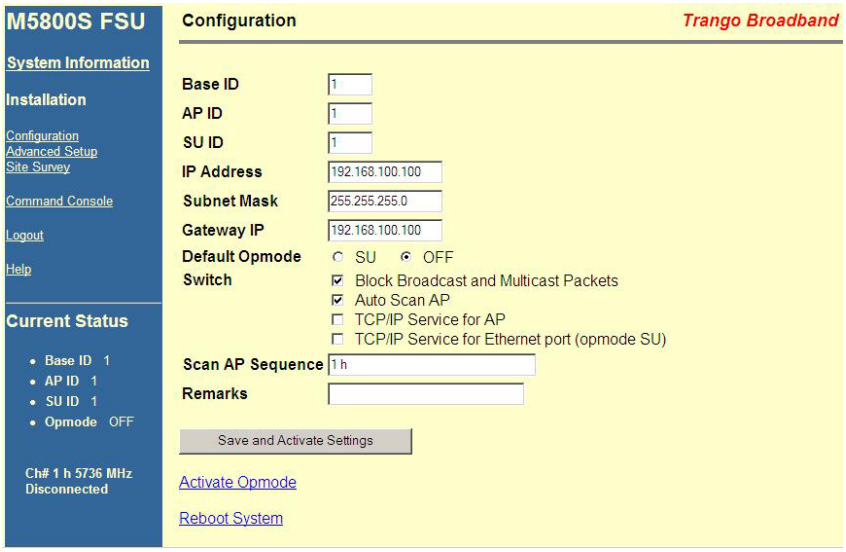

Configuration Page Parameters

Base ID: User definable integer 1-127. The AP that this SU will communicate with must have a matching Base ID loaded into its memory. Can only be changed while opmode is OFF.
AP ID: User definable integer 1-255. Identifies which AP that this SU will attempt association with. Can only be changed while opmode is OFF. NOT USED BY SYSTEM FOR AUTHENTICATION PURPOSES.
SU ID: The identification number assigned by the administrator which must also reside in the AP database.
IP Address: The IP address of the SU for use in Telnet, HTTP, SNMP, TFTP.
Subnet Mask: The subnet mask of the SU for use in Telnet, HTTP, SNMP, TFTP
Gateway IP: Default gateway of the SU for use in Telnet, HTTP, SNMP, TFTP
Default Opmode: Opmode the radio will enter after approximately 30 sec after power on provided no attempt to connect via Telnet is made.
Switches: Checked means active

Block Broadcast and multicast packets - Block these type Ethernet packets when active- ARP packet will be passed however.
Auto Scan AP - Activates channel and polarization scan sequence below.
TCP/IP service for AP - Allows the AP to telnet and HTTP into the SU via the RF link when SU opmode is "SU".
TCP/IP Service for Ethernet Port – Allows telnet and HTTP access to SU from Ethernet port regardless of opmode.

Scan AP sequence: The current channel and antenna polarizations used the SU uses while searching for an AP to associate with. Opmode must be "SU" and Auto Scan AP must be activated.
Remarks: A text field available for system administrator general use. Does not affect system performance.
Save and Activate Settings: Saves the variables to FLASH memory and activates setting.
Activate Opmode: Activates the default opmode. Must be clicked to activate the opmode after changing.
Reboot System: Reboots the system. Make sure all settings have been saved first.

Advanced Setup

In order to optimize your wireless link it may be necessary to reassign channels or change the receivers RF Threshold. To access these parameters, click on the **Advanced Setup** link.

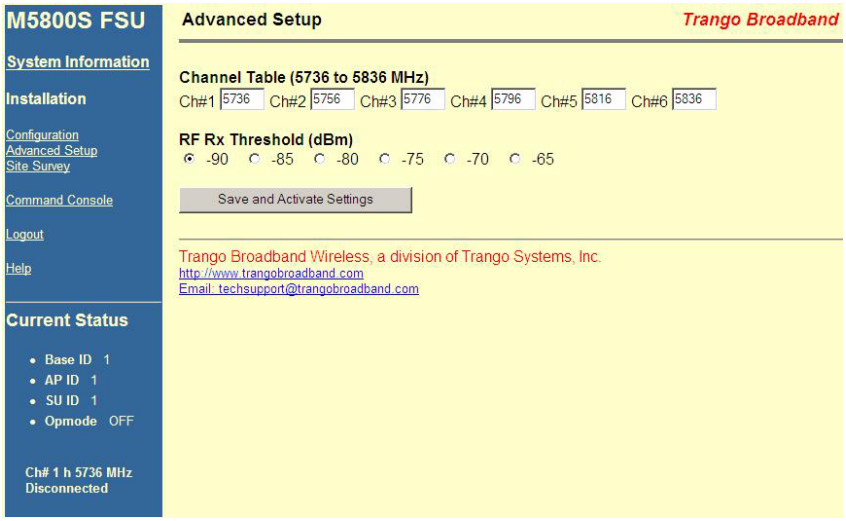

Channel Table : User may redefine each of the frequencies assigned to each channel. Note – Channel table should match channel table in Access Point.
RF RX Threshold: User may utilize this feature to block RF noise which is present below the set threshold. This feature is useful for interference mitigation.
Save and Activate Settings: Saves the setting to FLASH memory and activates setting.

Site Survey

The TrangoFOX includes a browser tool for detecting RF interference. To utilize this feature, click on the Site Survey link.

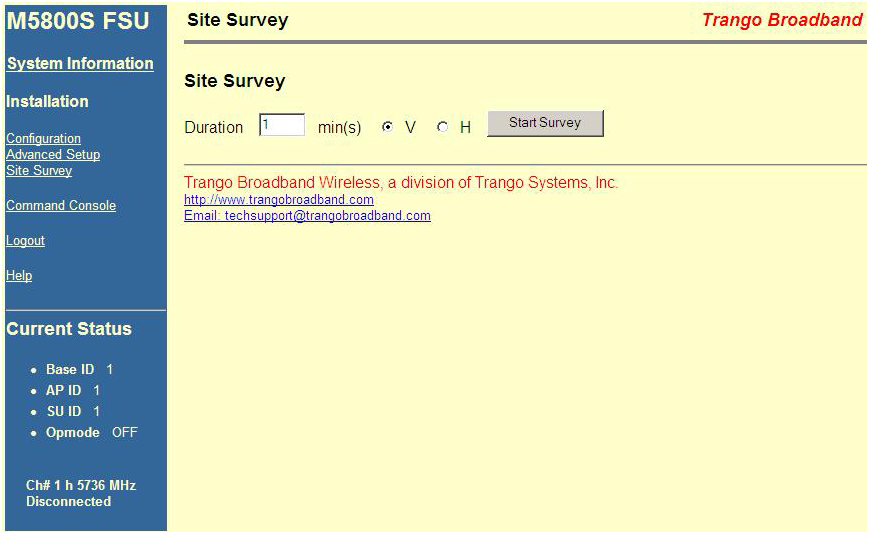

Enter a time duration desired for the site survey. During this interval, the SU will automatically scan frequencies in the band and will report back average and peak signals received. This feature is useful in detecting interference.

This feature can only be accessed when the SU is in opmode OFF.

Command Console

In addition to the functionality of the HTTB browser interface, more functions can be performed via the command line interface (CLI) Most Command Line Interface (CLI) commands may be entered directly from the HTTP Browser's Command Console screen:

Telnet

Although most radio functions can be managed via the browser interface, the command line interface (CLI) does provide slightly more functionality. Most importantly, there are two important functions that must be performed via CLI, that can not be performed via the web browser interface:

CLI Functions not available in Browser Interface

- Change Password (***_password*** command)
- RSSI Continuous readout (***rssi*** command)

To initiate a Telnet session with the TrangoFOX, first open a command prompt (DOS) session on your PC. Open a Telnet session by typing

telnet [ip address of radio]

Example:

```
C:>telnet 192.168.100.100
```

Note: All Trango radios (AP and SU) come factory pre-configured with a default IP address 192.168.100.100.

You will be greeted with current hardware and firmware information and prompted for a password. Type in the password and press enter.

Note: The factory default password is *trango.*

Note: If you can not telnet into the radio, check cable connections, ensure proper use of cross-over vs. straight-through cable, ensure PC's subnet is routable to radio's IP address.

Installation

Hardware

The TrangoFOX is supplied with hardware for pole or wall-mount installations. The diagrams below show a variety of mounting configurations.

Figure 7. Pole Mount (1" – 2" Diameter)

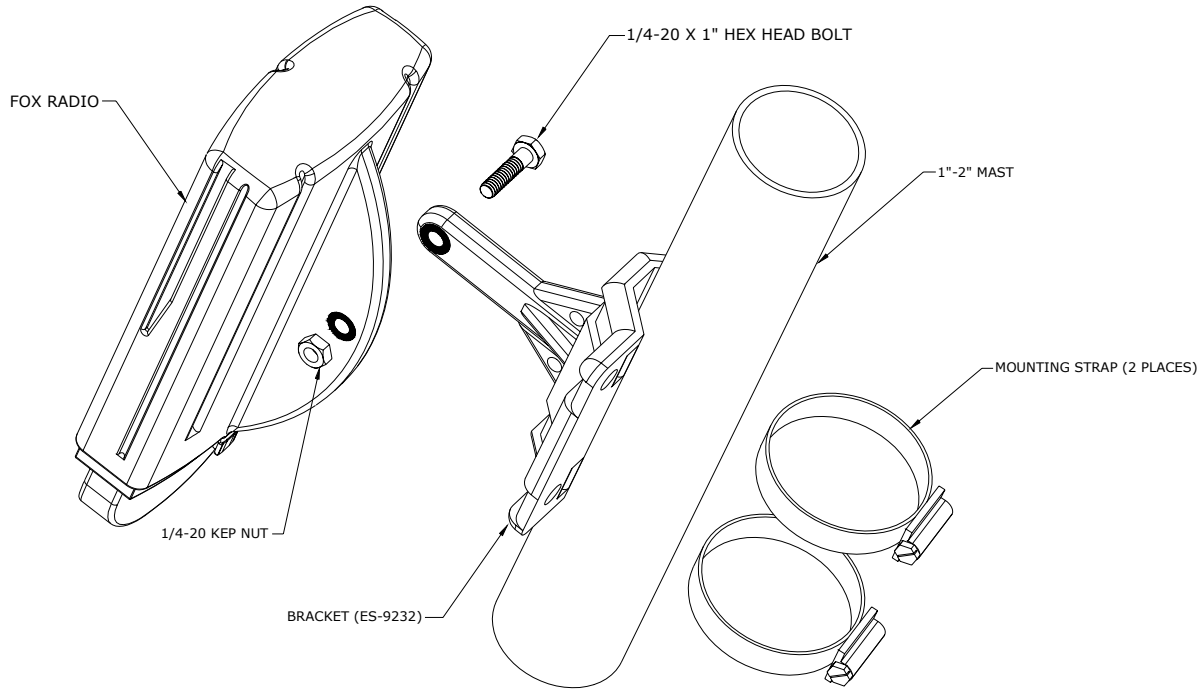

Figure 8. Wall Mount

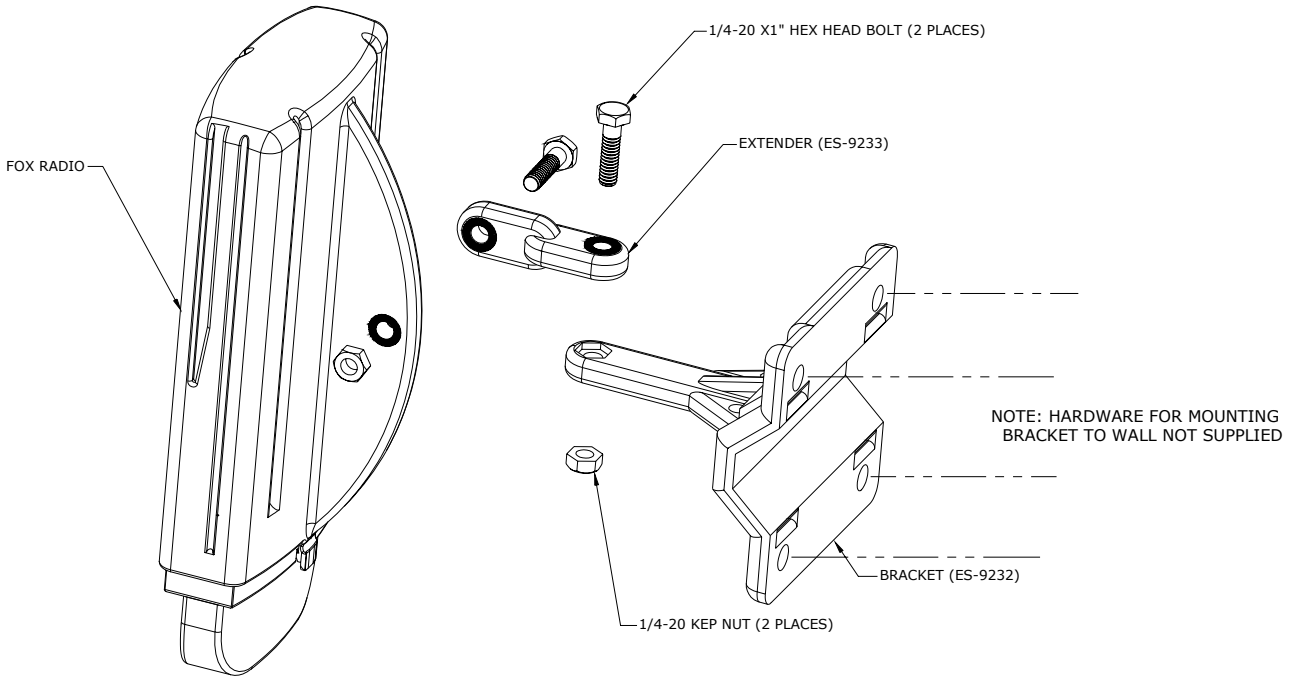

Figure 9. FOX5800-D Mounting on AD5800-25 Reflector

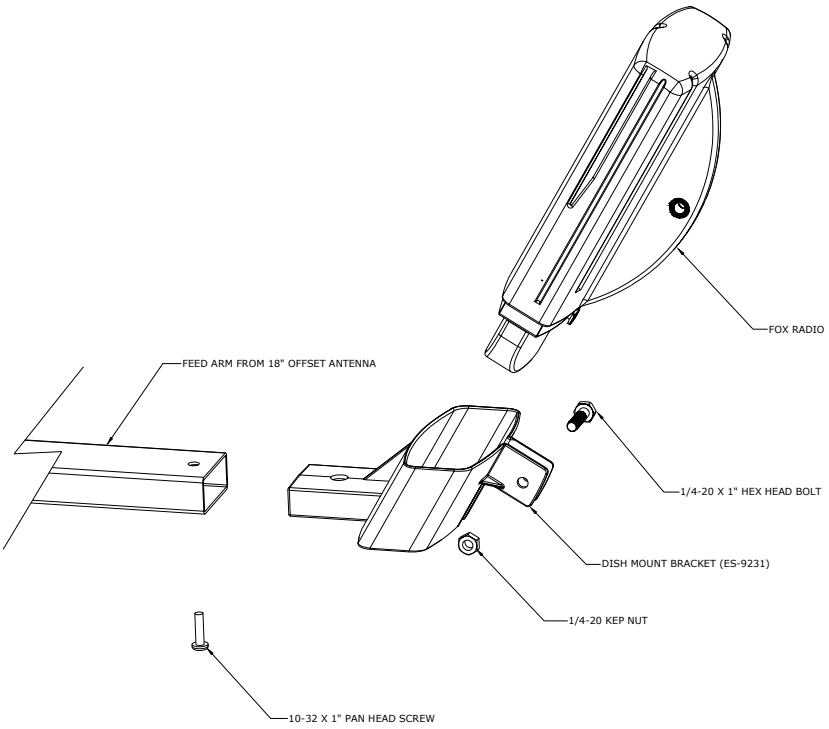

Figure 10. FOX5800-D / AD5800-25 Reflector Dish on Pole

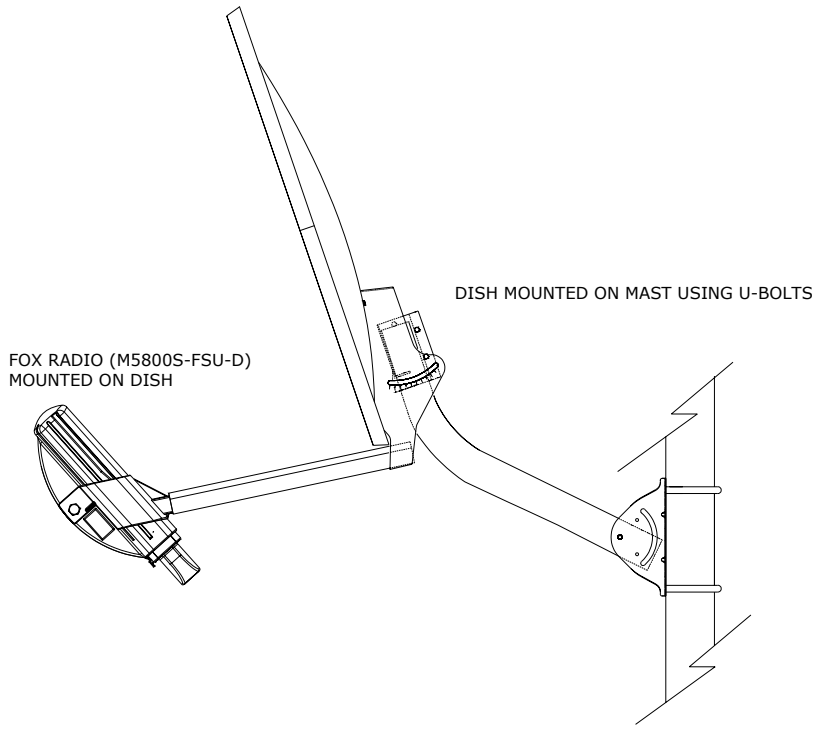

Figure 11. FOX5800-D / AD5800-25 Reflector Dish on Wall

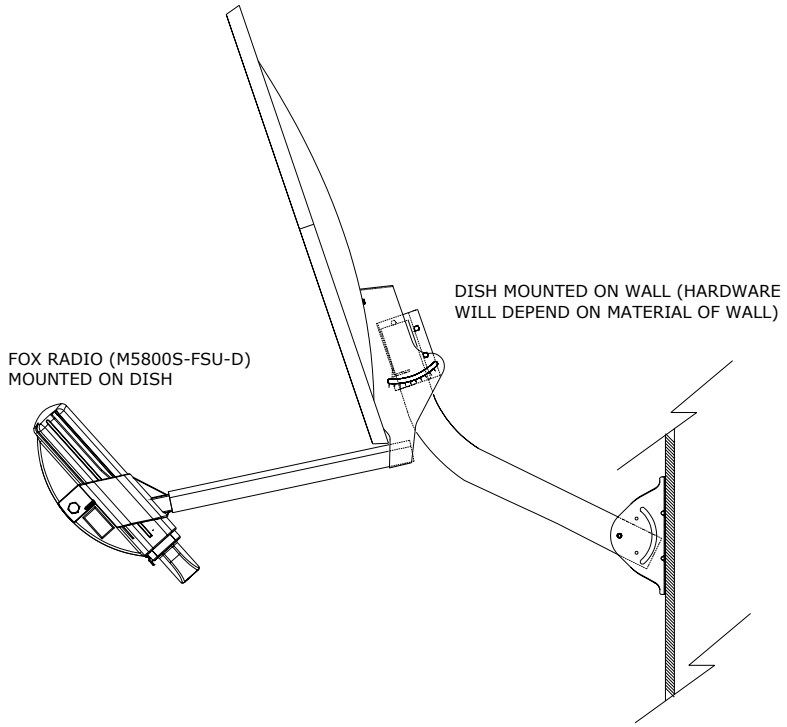

Cabling and Grounding Considerations

Shielded twisted pair Cat-5 cable is recommended for all installations.

It is important to provide strain relief and drip loop for STP Cat-5 cables. Strain relief holes are provided on the FOX5800 and FOX5300 mounting bracket for use with cable tie. Create drip loop and strain relief as shown below.

Figure 12. Cat-5 Cable Stain Relief

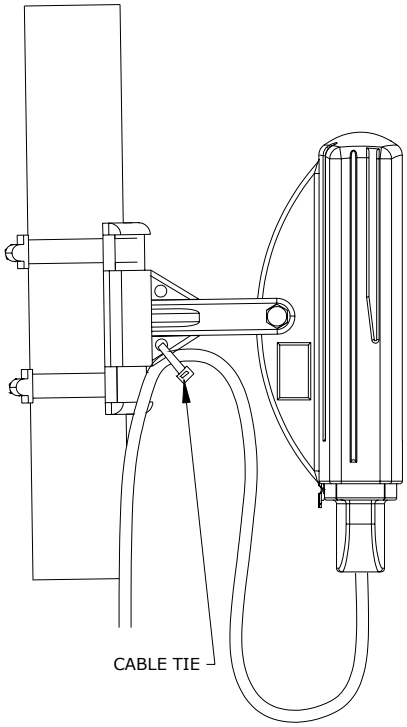

It is advised that the radio be grounded through use of the shielded twisted pair's drain wires. Prior to crimping the STP Cat-5 cable, strip back approximately 18" of sheathing to expose the drain wires. Cut all wires except the drain wires and then crimp as normal. Ensure that the drain wires make contact with the RJ-45 metal housing. Twist together the individual drain wires and connect the other end to a known ground.

Figure 13. Grounding with Drain Wires of Shielded Twisted Pair Cat-5 Cable

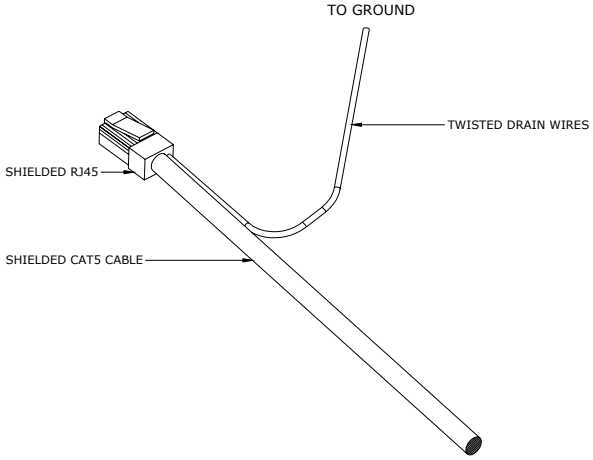

Weather Considerations

It is imperative that the radio be COMPLETELY SEALED when in use. Take care to ensure that the boot and foam insert are properly installed on the bottom of the radio. Without proper sealing, moisture may enter the radio and potentially cause damage which will not be covered under warranty.

Access to the radio RJ-45 Port and LED status lights are purposely located at the bottom of the radio to minimize the risk of water intrusion. **Do not mount the radio upside down.**

✐ Note: The J-Box is not a weatherized device and must be located either indoors or in a weather-protected cabinet.

Antenna Alignment

The four LED RSSI indicators on the bottom of the radio provide a handy alignment tool. If all four LEDs are lit, the unit is receiving –60 dBm or stronger. If no LEDs are lit, there is not sufficient signal strength to establish a wireless link.

LIT LEDs	Signal Strength
0 LED	-80 dBm
1 LED	-75 dBm
2 LED	-70 dBm
3 LED	-65 dBm
4 LED	-60 dBm

For more precise RSSI readings utilize the command line interface RSSI tool according to the procedure presented below.

SU Antenna Alignment Procedure

1. Ensure AP is in opmode "AP"
2. Telnet into the SU
3. Type command ***RSSI <channel> <polarization>*** - Example ***RSSI 3 V*** (chan. 3, vertical polarization)
4. Telnet session screen will begin a continuous readout of the received signal strength.
5. As you read the RSSI reading, move the antenna in the horizontal and vertical planes until the maximum RSSI reading is achieved. For short links you can expect an RSSI of –60 dBm or better. For longer links and RSSI of –75 dBm is acceptable. Any RSSI of less than –80 dBm may be too weak for the radios to reliably associate and pass data.
6. If it is not possible to receive an adequate RSSI reading, it may be necessary to reorient the AP (up/down, left/right), to increase the output power of the AP, or to move the SU to a location with better line-of-sight conditions to the AP.

Once you are satisfied with the RSSI reading, tighten down the SU in the optimum position. To stop the RSSI continuous readout, hit SPACE ENTER.

Specifications

Radio Transmit Specifications

Frequencies:
Storable Channels: 30 memory locations

FOX5800 and FOX5800-D
Frequency Range: 5.736 to 5.836 GHz adjustable in 1 MHz channel increments
Default Channels-
Channel 1: 5.736 GHz
Channel 2: 5.756 GHz
Channel 3: 5.776 GHz
Channel 4: 5.796 GHz
Channel 5: 5.816 GHz
Channel 6: 5.836 GHz

FOX5300
Frequency Range 5.260 to 5.340 GHz adjustable in 1 MHz channel increments
Channel 7: 5.260 GHz
Channel 8: 5.280 GHz
Channel 9: 5.300 GHz
Channel 10: 5.320 GHz
Channel 11: 5.340 GHz

RF Conducted Power:	FOX5800:	Max: +21 dBm +/- 2 dB Min: -12 dBm +/- 2 dB
	FOX5800-D:	Max: +21 dBm +/- 2 dB Min: -12 dBm +/- 2 dB
	FOX5300:	Max: +15 dBm +/- 2 dB Min: -12 dBm +/- 2 dB
EIRP Max:	FOX5800	+36 dBm
	FOX5800-D	+46 dBm (with AD5800-25-D Reflector)
	FOX5300	+30 dBm

Freq. Stability:	.00025 % PLL Stabilized (2.5 ppm) over temp
Freq. Plan:	Single upconversion, 480 MHz IF
Modulated BW:	22 MHz (null to null, 20 dB)
2nd Harmonic atten:	Per CFR47 part 15.205
LO Supression:	Per CFR47 part 15.205
Symbol Rate:	1.375 MSPS
Error Correction:	None
Modulation:	1 Mbps DBPSK for header, 11 Mbps CCK spread spectrum for payload

Receiver Section (check these figures)

Cascade Noise Figure:	< 6 dB
Sensitivity:	- 82 dBm typical-1600 byte packet
(1E10-6 BER)	- 87 dBm typical-64 byte packet
Adj. Channel Rejection:	> 20 dB for 10 % PER
Image Rejection:	> 60 dB for 10% PER
Frequency Plan:	Single conversion, IF at 480 MHz
LO stability:	.00025% PLL stabilized (+/-2.5ppm) over temperature range

Data Input Section

Data Rate (User):	Up to 10 Mbps Sustained throughput
Format:	10/100 BaseT IEEE 802.3 Ethernet compliant
Ethernet packet:	Up to 1600 byte long packets

Power

Input Voltage: Input voltage range at unit is 10.5 VDC to 21 VDC max

Power is supplied on Ethernet cable using junction box provided with up to 330 foot 24 AWG STP cable.

Current Cons.: 400 mA in transmit mode at max power using 20 V standard adapter (8 W)

Data Output Section

Data Rate (User):	10 Mbps Maximum sustained throughput
Format:	10/100 BaseT IEEE 802.3 Ethernet compliant
Ethernet Protocols:	TCP/IP, Telnet, TFTP, UDP, HTTP

Physical Interfaces

LAN Interface:	Shielded RJ45 connector
Power:	Carried on 4 unused pins of Ethernet cable

Mechanical and Environmental

General Material:	High Temp ABS/Polycarbonate Enclosure
Size:	6”x3”1.5”
Weight:	1 lb
Mounting:	Polycarbonate Wall/Pole mount bracket

Environmental

Operating Temp:	-40 to 60 deg C
Storage:	-40 to 85 deg C
Humidity:	100 % When sealed properly
NEMA Rating:	NEMA 4
Shock:	Sustain 3 axis drop from 5 feet

Standard Power Supply

20 Volt DC Power adapter and J-Box supplied with product.

Type:	Linear wall mount transformer
Input:	120 VAC
Output:	20 VDC +/- 1 V
Max current:	1200 mA

FCC Compliance

The transceiver shall comply with the following regulations:
FOX5800 and FOX5800-D: FCC 15.247 Spread Spectrum transmitter - 5.725 to 5.85 GHz – EIRP = +36 dBm max
DOX5300: FCC 15.407(2) U-NII Band 2 transmitter - 5.25 to 5.35 GHz – EIRP = +30 dBm max

Subpart B
Class B Digital device verification

Subpart C
FCC 15.203 Antenna connection requirement – non-standard connection
FCC 15.209 Unwanted emissions below 1GHz -
FCC 15.207(a) AC conducted emissions 450Khz to 30 MHz
FCC 15.205 Restricted bands (LO and harmonics)= 54 dBuV average @3 meters

EN 301 489-1 Part 7.2 - RF Immunity

FOX5800 and FOX5300 Antenna Specifications

Type	Patch Array Antenna
Polarization	Vertical, Horizontal electronically selectable
Range	FOX5800: 4 Miles (LOS) from Access5830 AP with 10 dB fade margin. FOX5300: 2 Miles (LOS) from Access5830 AP with 10 dB fade margin.
Frequency	5.2 to 5.9 GHz
Gain	+15 ± 1 dBi
Azimuth Beamwidth	32°
Elevation Beamwidth	18°

FOX5800-D Antenna Specifications (when mounted on AD5800-25 Reflector Dish)

Type	DSS Style Dish Antenna
Polarization	Vertical, Horizontal electronically selectable
Range	10 Miles (LOS) from Access5830 AP with 10 dB fade margin.
Frequency	5.7 to 5.9 GHz
Gain	+25 dBi
Azimuth Beamwidth	9°
Elevation Beamwidth	9°