Access5830™

Wireless Broadband System

USER MANUAL

June 15, 2005

Revision G
For M5830S Firmware Version 1.12
and TrangoFOX Firmware Version 1.05

Table of Contents

Preface iv
FCC Information ... iv
Warranty Information ... iv
Section 1 Introduction 1
Overview ... 1
SmartPolling™ Overview ... 1
Section 2 Hardware Overview 2
Access5830 Radio Types ... 2
Access5830 AP and SU Hardware Components ... 4
FOX Series Subscriber Units Hardware Components ... 5
Section 3 Getting Started 7
Connections and Power ... 7
Opmode and Radio Management Concepts ... 7
Browser Interface ... 8
Command Line Interface ... 10
Telnet ... 10
Troubleshooting ... 10
Reset Button on FOX Series Radios ... 11
Serial Port on M5830 Series Radios ... 11
Section 4 Basic Configuration via Browser Interface 12
Configuring AP's Subscriber Unit Database ... 12
Configure Other Basic AP Parameters ... 14
Configure Basic SU Parameters ... 16
LED Summary ... 17
Evaluate Link Quality ... 17
RF Link Loopback Test ... 18
SU Ranging / RSSI Test ... 18
Advanced Setup Page ... 19
Other Key Parameters ... 20
Site Survey Page ... 21
Section 5 Basic Configuration via CLI 22
Access Point Basic Settings ... 22
Subscriber Unit Basic Settings ... 25
Subscriber Unit Database (SUDB) Settings ... 27
Section 6 Mounting Hardware 28
M5830 Series Radios (Access Points and Subscriber Units) ... 28
FOX Series Radio Hardware and Mounting ... 30
Cabling and Grounding Considerations ... 32
Weatherizing ... 34
Section 7 Deployment 35
Site Selection ... 35
Site Survey ... 35
Channel Planning ... 36
AP Search and SU Antenna Alignment ... 36
Link Management Commands ... 38
Section 8 Management 41
SU Management from AP ... 41
TCP/IP SU Management ... 42
Loading Multiple SUs into SUDB using DLOAD Command ... 42
Managing AP from SU side of Network ... 42
Objects for Monitoring and Control ... 43
SNMP Setup ... 43
Appendix A HTTP Browser Interface 45
Appendix B Command Set Reference 54
Appendix C Specifications 61
Appendix D RF Primer 66
Glossary 71

Table of Figures

Figure 1-1: Typical Point-to-Multipoint Deployment 1
Figure 2-1: Access5830 Series Radios (AP and SU) 2
Figure 2-2: FOX Series Subscriber Units 2
Figure 2-3: Basic Components of an Access5830 Radio 4
Figure 2-4: Bottom of Access Point (and 5830 Series SU) Shows Access Cover with LEDs 4
Figure 2-5: Components of FOX Series Subscriber Units 5
Figure 2-6: Exploded View of Radio, Foam Insert, and Boot 6
Figure 2-7: Side View of FOX Series SU 6
Figure 2-8: Bottom View of FOX Series SU (Boot Removed) 6
Figure 3-1: Wiring Diagram 7
Figure 3-2: Radio Management Methods 8
Figure 3-3: Browser Interface Login Page 9
Figure 3-4: Web Browser System Information Page 9
Figure 3-5: Pin-outs for Serial Cable 11
Figure 3-6: Terminal Settings 11
Figure 4-1: Bottom of FOX Radio with LEDs 17
Figure 4-2: Bottom of M5830 Radio with LEDs 17
Figure 6-1: M5830 Mounting Hardware Assembly 28
Figure 6-2: Alternative Mounting 28
Figure 6-3: Articulation for M5830S-AP with Mono Pod Mount (not supplied) 29
Figure 6-4: FOX Series SU Pole Mount (1” – 2” Diameter) 30
Figure 6-5: FOX Series SU Wall Mount 30
Figure 6-6: FOX5800-D with Mounting Cradle for DSS Dish Antenna 31
Figure 6-7: FOX5800-D / AD5800-25 Reflector Dish on Pole 31
Figure 6-8: FOX5800-D / AD5800-25 Reflector Dish on Wall 32
Figure 6-9: Grounding Example for M5830 Series 32
Figure 6-10: Cat-5 Cable Strain Relief 33
Figure 6-11: Grounding with Drain Wires of Shielded Twisted Pair Cat-5 Cable 33
Figure 7-1 Default Channel Table (MHz) 36
Figure 8-1: Typical Radio System 66
Figure 8-2: Attenuation of an RF signal 67
Figure 8-3: Radiation Pattern of Directional Antenna 68
Figure 8-4: Multipath Reception 69
Figure 8-5: Fresnel Zone Obstruction 69
Figure 8-6: Fresnel Zone Radius Calculation 70

Table of Tables

Table 1: Access5830 Radio Description 3
Table 2: Reference Table of Basic AP System Information 22
Table 3: Reference Table of Basic SU System Information 25

Section 1 Preface

This manual covers basic configuration and installation of the Access5830 Wireless Broadband System, and applies to the following radio part numbers:

M5830S-AP-60	Dual-band Access Point with internal sectoral patch antenna
M5800S-FSU	FOX5800 5.8 GHz Subscriber Unit
M5300S-FSU	FOX5300 5.3 GHz Subscriber Unit
M5800S-FSU-D	FOX5800-D 5.8 GHz Subscriber Unit (requires external reflector dish)
M5800S-FSU-D2	FOX5800-D2 5.8 GHz Subscriber Unit may be used with or without reflector dish
M5830S-SU	Dual-band Subscriber Unit with integrated patch antenna
M5830S-SU-EXT**	Dual-band Subscriber Unit with connector for external antenna

**The M5830S-SU-EXT subscriber unit must be used in conjunction with an FCC certified external antenna (sold separately). The M5830S-SU-EXT includes two reverse polarity SMA RF Connectors for attachment of external antenna cables. The installation of the M5830S-SU-EXT requires professional installation due to FCC limits on output power settings when using the 5.3 GHz U-NII band. Contact your sales person for more information regarding "Professional Installation Guide."

FCC Information

This device complies with Part 15 of the FCC Rules and Regulations. Operation is subject to the following two conditions: (1) This device may not cause harmful interference, and (2) this device must accept any interference received, including interference that may cause undesired operation.

This equipment has been tested and found to comply with the limits for a Class B digital device, pursuant to Part 15 of the FCC Rules. These limits are designed to provide reasonable protection against harmful interference in a residential installation. This equipment generates, uses, and radiates radio-frequency energy; if not installed and used in accordance with these instructions, the unit may cause harmful interference to radio communications. However, there is no guarantee that interference will not occur in any particular installation. If this equipment does cause harmful interference to radio or television reception, which can be determined by turning the equipment off and on, the user is encouraged to correct the interference by one of more of the following measures:

1) Reorient the antenna.
2) Increase the separation between the affected equipment and the unit.
3) Connect the affected equipment to a power outlet on a different circuit from that which the receiver is connected to.
4) Consult the dealer and/or experienced radio/TV technician for help.

FCC ID: NCYM5830SSU
FCC ID: NCYM5830SSUEXT
FCC ID: NCYM5830SAP60
FCC ID: NCYM5800SFSU
FCC ID: NCYM5300SFSU
FCC ID: NCYM5800SFSUD
FCC ID: NCYM5800SFSUD2

IMPORTANT NOTE: Intentional or unintentional changes or modifications must not be made unless under the express consent of the party responsible for compliance. Any such modifications could void the user's authority to operate the equipment and will void the manufacturer's warranty. To comply with FCC RF exposure requirements, the following antenna installation and device operating configurations must be satisfied. The antenna for this unit must be fixed and mounted on outdoor permanent structures with a separation distance of at least two meters from all persons. Furthermore, it must not be co-located or operating in conjunction with any other antenna or transmitter.

Warranty Information

Radios from Trango Broadband Wireless are warranted from one year from date of purchase. Please see www.trangobroadband.com for a complete description of warranty coverage and limitations.

Section 2 Introduction

Your Trango Broadband Access5830 radio system provides a reliable and robust means to deliver broadband access to a wide geographic region through wireless Ethernet connectivity. This section will familiarize you with basic operational concepts, as well as an overview of the various components and hardware of the Access5830 system.

Overview

The dual-band Access5830 is a highly versatile and cost effective outdoor point-to-multipoint solution for wireless broadband service providers and enterprise connectivity applications. The Access5830 delivers 10 Mbps over the air, and operates in either the 5.8 GHz ISM band or the 5.3 GHz U-NII band. Software switchable dual polarized antennas, coupled with two bands of frequency operation, allow a total of 22 non-overlapping channel/polarization combinations.

✐ Note: In this document, and within the radio configuration itself, the designators of "ISM" (5725-5850 MHz) and "UNII" (5250-5350 MHz) are used to distinguish between the two bands.

The Access5830 system is classified as a Layer 2 multi-point bridge. Authentication of the SUs is performed using a secure, proprietary method at the MAC level, and thus all forms of Ethernet traffic and unlimited IP addresses will pass seamlessly over the system. There is no limitation on the number of IP addresses or hardware devices that an individual SU may have physically connected to it.

Both APs and SUs can be easily configured and managed through built in serial and Ethernet interfaces. A web browser can be used for quick set up and deployment. The Access5830 radios are powered using "power-over-Ethernet" for ease and low-cost installation. Both APs and SUs feature a handy "site survey" tool to check for interference.

The Access5830 system consists of two types of radios: Access Points (AP) and Subscriber Units (SU). The AP unit acts as a hub in a star configuration wireless multipoint network supporting up to 512 subscriber units. The AP delivers wireless broadband service (Ethernet connectivity) to one or more SUs according to a proprietary adaptive dynamic polling algorithm called SMARTPolling™. Network operators can co-locate multiple APs (up to 22) at a single cell site, thus increasing the aggregate throughput available at each wireless point of presence (POP).

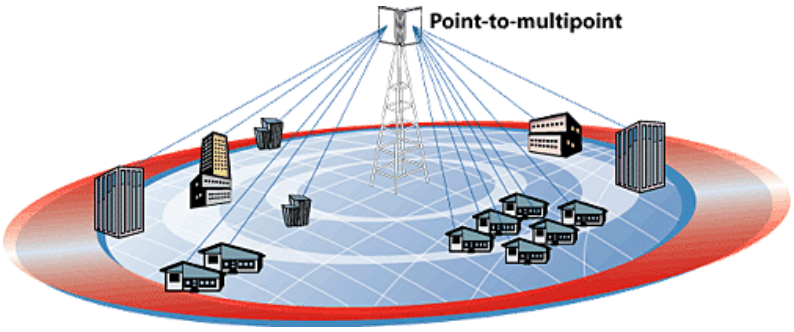

Figure 2-1: Typical Point-to-Multipoint Deployment

The Access5830 AP provides a host of comprehensive tools and functions. The AP typically resides at the center of the point-to-multipoint (PMP) network, and performs all management functions including the allocation of bandwidth for all associated SUs.

SmartPolling™ Overview

One of the major advantages of the Access5830 system is the ability of the AP to handle multiple SU connections, and share the 10 Mbps data throughput very efficiently. Bandwidth allocation is managed by the AP's SmartPolling™ algorithm according to provisioning rules set up by the system administrator. The AP polls each SU in a round robin format to determine if the SU has data to transfer. The SU only transmits the

data "upstream" to the AP when the AP gives it authorization via a "transmit grant." The SU parses every "downstream" data packet from the AP, and identifies packets intended for it. In order for an SU to communicate with an AP, the system administrator must first add the MAC address and ID number of that SU to the subscriber database in the AP. The SmartPolling™ algorithm will poll active SUs more often, thus not wasting time and bandwidth on inactive SUs. Several other parameters are considered in the SmartPolling™ algorithm, including Committed Information Rate (CIR), Maximum Information Rate (MIR), and the Priority Setting.

Each of the above parameters is set in the AP by the system administrator and cannot be controlled at the SU. These parameters will be covered in greater detail later in this text.

When power is first applied to a properly installed SU, it will scan all the channels in its scan table searching for an AP with the same Base ID that is sending transmit grants. The SU will then stop the channel scanning process and lock onto the AP's channel and respond to the AP using maximum RF power. Before the AP can add the SU to the polling list, it must authenticate the SU by verifying the MAC address and performing a ranging operation to the SU.

Once successfully authenticated and ranged, the SU will be added to the AP's normal polling list. The AP will then adjust the RF transmit power of the SU according to the Target RSSI parameter set in the AP. This process is referred to as "power leveling."

Section 3 Hardware Overview

This section provides details about each radio in the Access5830 family. Each radio in the Access5830 family includes electronically switchable dual-polarized antennas (internal or external). All units are designed for outdoor installation, and are powered by Power-over-Ethernet (POE) for ease of installation. The Access5830 Access Point and Subscriber Units are dual-band radios, and provide channels of operation in both the 5.8 GHz ISM band and the 5.3 GHz UNII band. The FOX series subscriber units operate in either the 5.8 GHz ISM band (M5800S series) or the 5.3 GHz UNII band.

Access5830 Radio Types

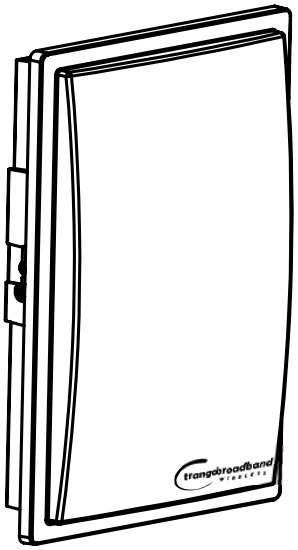

Figure 3-1: Access5830 Series Radios (AP and SU)

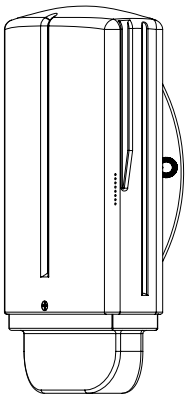

Figure 3-2: FOX Series Subscriber Units

Table 1: Access5830 Radio Description

	Description	Freq. Band(s)	Antenna Gain	MAX EIRP	Style
Access Point					
M5830S-AP-60	Dual Band AP with internal 60° antenna	5725-5850 MHz (ISM) 5250-5350 MHz (UNII)	14 dBi	36 dBm 30 dBm	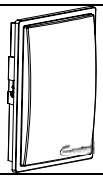
Subscriber Units					
M5800S-FSU	FOX5800 SU FOX Series 5.8 GHz SU with internal antenna	5725-5850 MHz	15 dBi	36 dBm	
M5800S-FSU-D	FOX5800-D SU FOX Series 5.8 GHz SU requires AD5800-25 External Dish antenna (Note: this unit will not work without the dish)	5725-5850 MHz	25 dBi	47 dBm	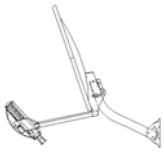
M5800S-FSU-D2	FOX5800-D2 SU FOX Series 5.8 GHz SU may be used with AD5800-25 External Dish antenna or without.	5725-5850 MHz	8 dBi 25 dBi (w/dish)	32 dBm 49 dBm	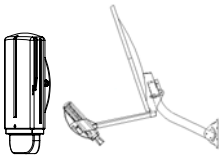
M5300S-FSU	FOX5300 SU FOX Series 5.3 GHz SU with internal antenna	5250-5350 MHz	15 dBi	30 dBm	
M5830S-SU	5830 Series Dual Band SU with internal antenna.	5725-5850 MHz 5250-5350 MHz	17 dBi	36 dBm 30 dBm	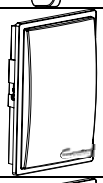
M5830S-SU-EXT	Dual Band SU with external antenna connectors	5725-5850 MHz 5250-5350 MHz	N/A	Up to 52 dBm 30 dBm	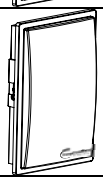

Note: The FOX5800 and FOX5800-D radios contain different integrated antennas. The FOX5800 includes a multi-element antenna that will not work properly when placed on an AD5800-25-D dish. The FOX5800-D2 may be used with or without the reflector dish

Access5830 AP and SU Hardware Components

Each radio comes equipped with a power-over-Ethernet (PoE) J-Box, an AC adapter, and mounting hardware. The Access5830 AP (part #M5830S-AP-60) also includes a serial programming cable.

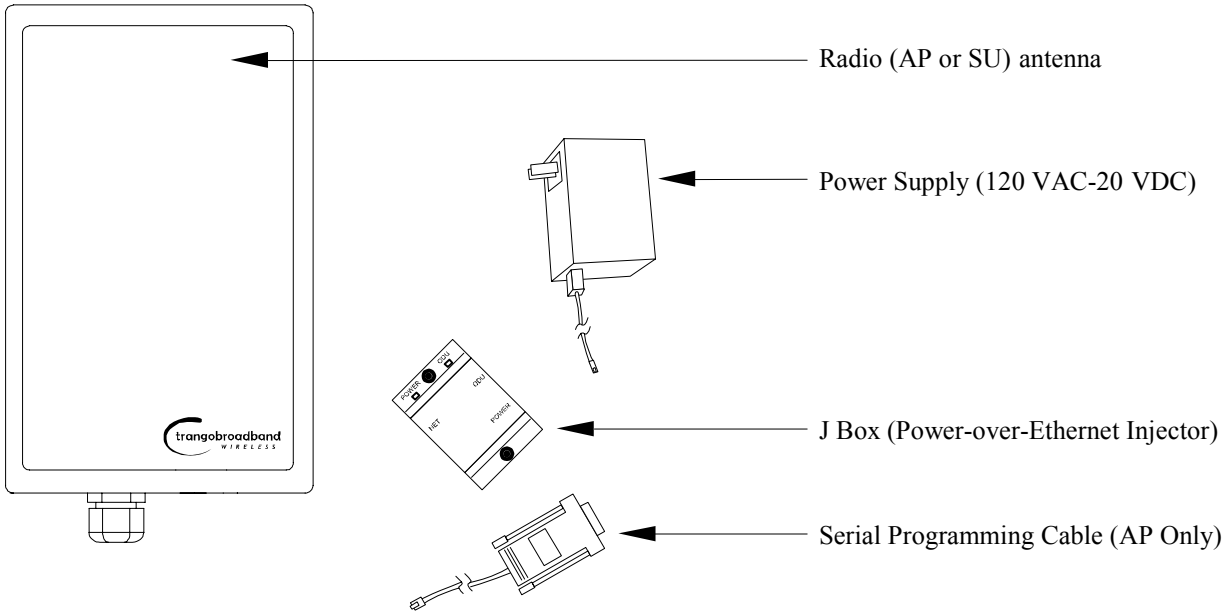

Figure 3-3: Basic Components of an Access5830 Radio

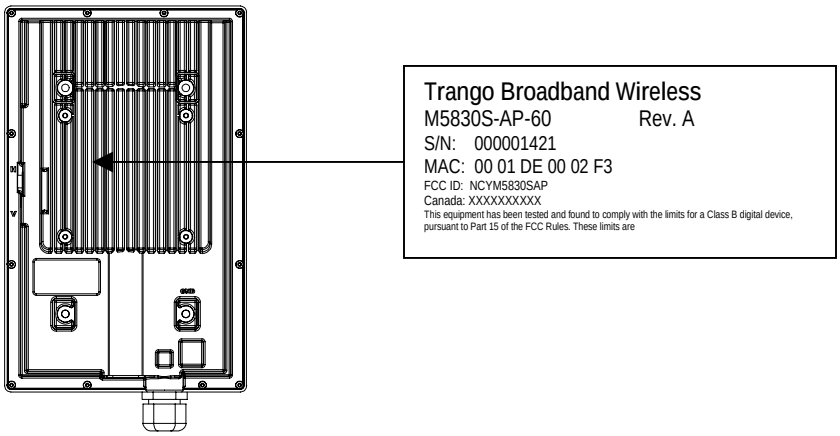

Figure 2-4: Back of Access Point (and 5830 Series SU) Shows Equipment Identification Tag

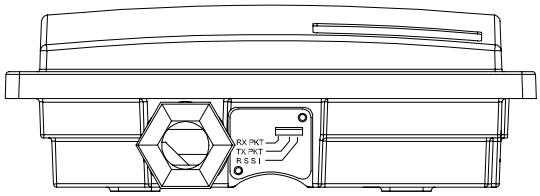

Figure 3-4: Bottom of Access Point (and 5830 Series SU)

At the bottom of the Access5830 are two access ports: a twist-on weatherproof cable port for the RJ-45 Ethernet port, and an access cover (port plug for the RJ-11 serial port. Most configuration and management tasks can be performed through the Ethernet port. Below the port plug are three LEDs that provide RF link-status information, and will be discussed later in this text.

→ Note: When placing the port plug, ensure that it is properly seated by pressing around all the edges and in the center.

FOX Series Subscriber Units Hardware Components

Each FOX series subscriber unit comes equipped with the radio itself, a power-over-Ethernet (PoE) J-Box, an AC adapter, and mounting hardware. The FOX5800 and FOX5300 include hardware for wall or pole mounting (excluding wall mount screws and pole-mount hose clamps). The FOX5800-D is equipped with a dish/reflector mounting bracket. The FOX5800-D2 is equipped with both the dish mount and the stand-alone wall/pole mount.

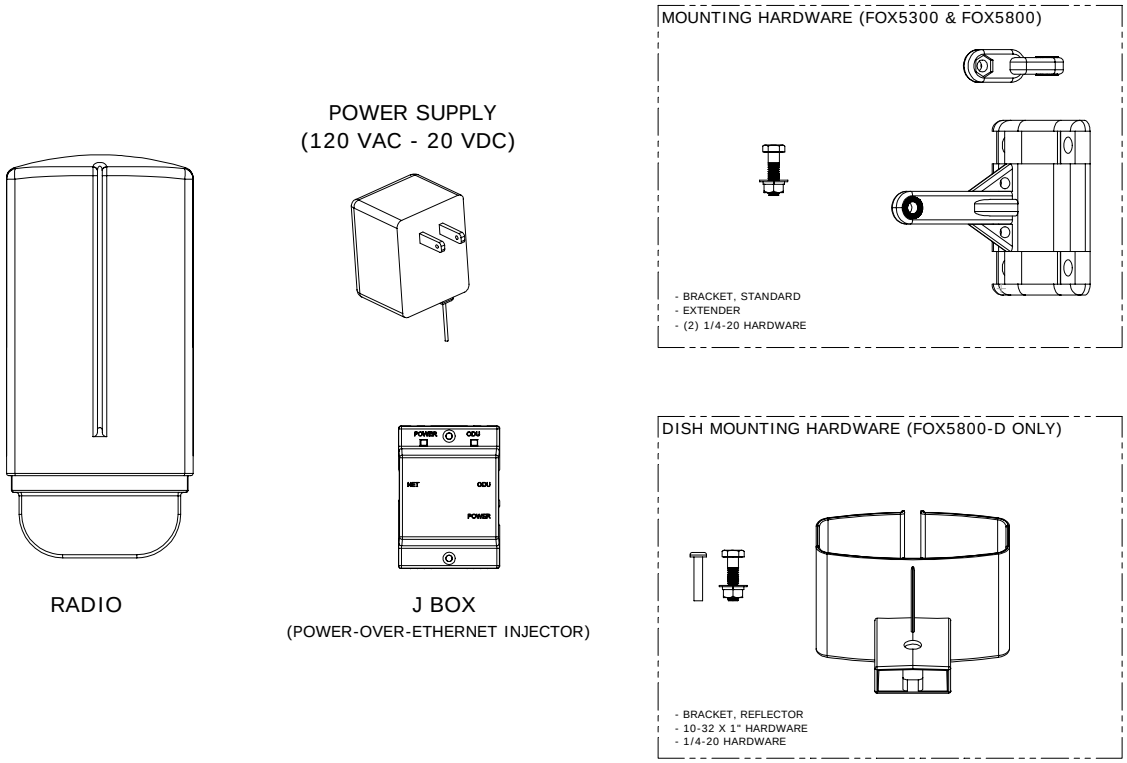

Figure 3-5: Components of FOX Series Subscriber Units

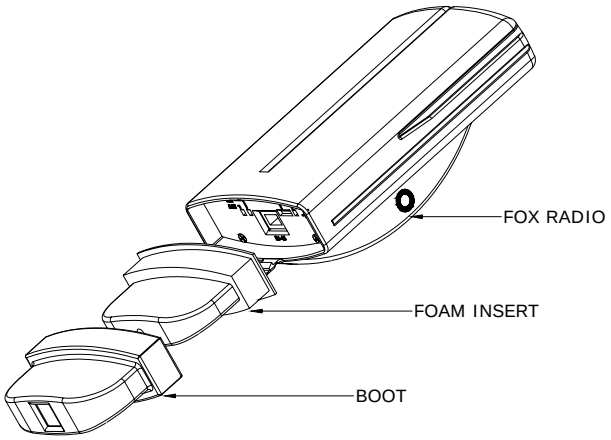

Figure 3-6: Exploded View of Radio, Foam Insert, and Boot

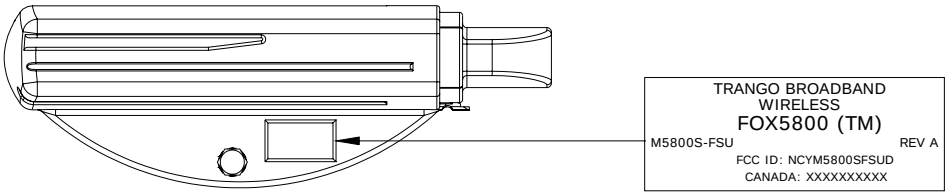

Figure 3-7: Side View of FOX Series SU

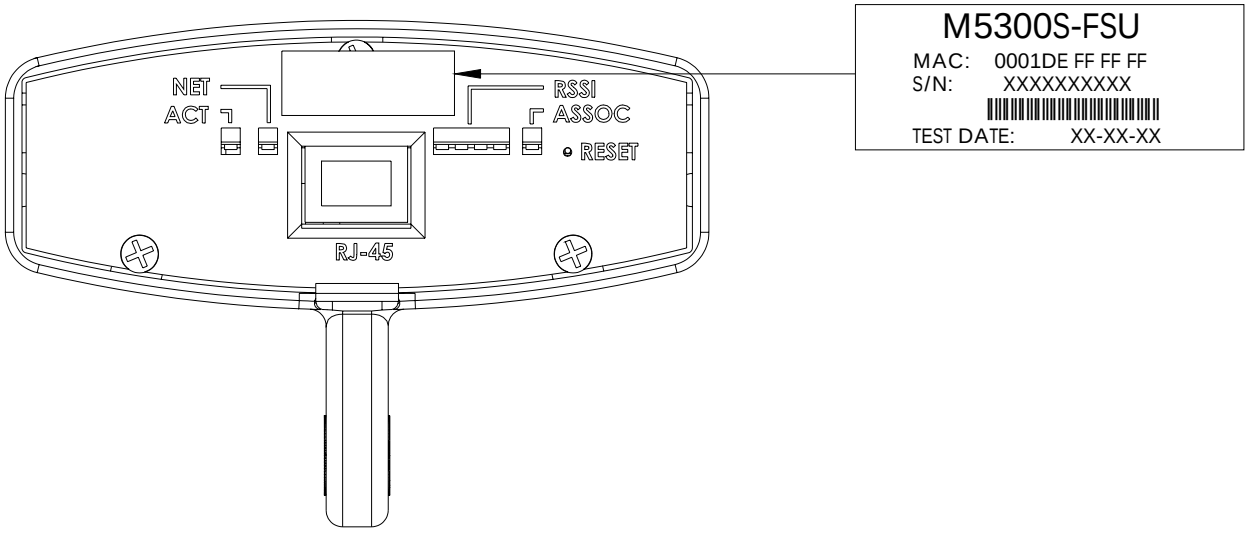

Figure 3-8: Bottom View of FOX Series SU (Boot Removed)

The radio's model number and FCC ID are located on the side of the radio. The MAC address is on a separate label located under the radio's boot.

The TrangoFOX radio is equipped with a removable "boot" and weatherproofing foam insert. Removing the boot and foam insert reveals the radio's Ethernet port, LED status lights, reset button, MAC address, and serial number. Pressing the reset button resets the unit's IP address and password to factory defaults.

Section 4 Getting Started

This section explains how to power your radios, establish TCP/IP connectivity to the radios, as well as how to access the HTTP browser and the command line interfaces.

Connections and Power

Connection and powering of the radios is the same for both APs and SUs.

- Connect a Cat-5 (straight through) Ethernet cable (we recommend shielded twisted pair) between the ODU (out door unit) port of the J-box and the RJ-45 connector on the radio. Note that this cable will carry power-over-Ethernet (PoE).

- If connecting to a COMPUTER, use a Cross-Over Ethernet cable from the NET port of the J-box to the computer's Ethernet port.

  If connecting to a HUB, SWITCH, or ROUTER, use a Straight-Thru cable.

- Plug the AC adapter into an AC outlet.

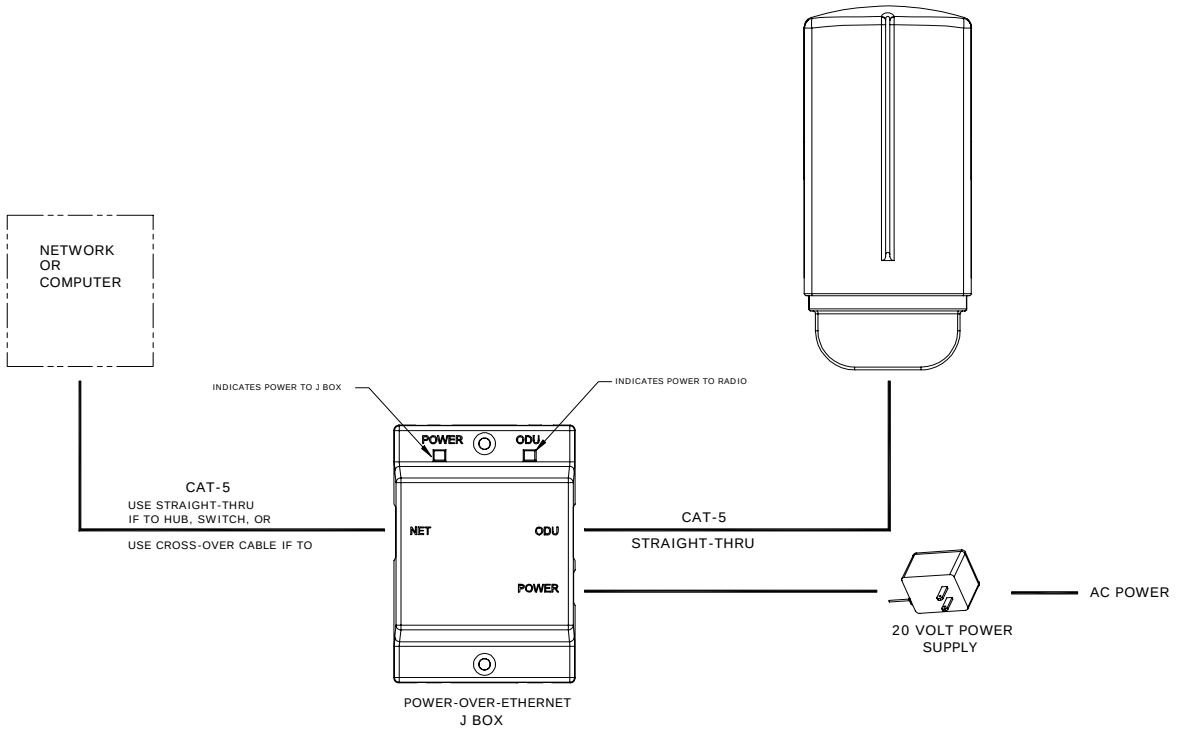

Figure 4-1: Wiring Diagram

Both green LEDs on the J-box should be lit, indicating power is present at the J-box as well as the radio.
You are now ready to configure the radio via the Ethernet port.

Opmode and Radio Management Concepts

Proper connections to the radios, and careful IP/routing and planning, will enable the network administrator to access and manage the radios remotely over the network.

Radio management through TCP/IP can be performed from a PC connected to the Ethernet port of the radio. Furthermore, PCs connected to the AP can manage SUs over the wireless connection. However, a PC connected to an SU cannot gain direct TCP/IP access to the AP over the wireless connection.

To fully understand radio management for the Access5830 system, it is important to be familiar with the concept of operation mode or "Opmode."

APs can be in one of two Opmodes: Opmode "OFF" or Opmode "AP." When in Opmode "OFF," the radio is not transmitting, and is not attempting to associate with the SUs. Alternatively, when in Opmode "AP," the radio is transmitting, and is attempting to associate with the SUs. Similarly, SUs have two Opmodes: Opmode "SU" and Opmode "OFF."

Certain functions, such as the site survey function and the SU RSSI function can only be performed while the radio is in Opmode "OFF." See Appendix D – Command Set Reference for a complete listing of commands, and the appropriate Opmode(s) for each command.

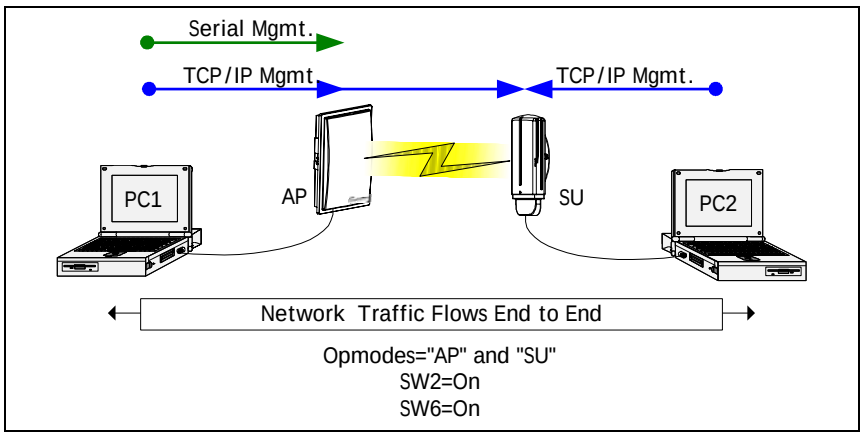

Figure 4-2: Radio Management Methods

Notes about Switch Settings

Access5830 firmware includes several "switches" that are used to set certain operational parameters of the radios. Switch settings can be changed using the HTTP browser interface or the Command Line Interface. For purposes of TCP/IP radio management, the following three switches are important:

SU Switch 6 - TCP/IP access direct to SU from SU side of network requires that switch 6 (SW 6) be "ON." SW 6 was introduced with the FOX series subscriber units and v1.11 firmware for the M5830 Series SU. Default setting for SW 6 (from factory) is "ON." If SW 6 is off, TCP/IP access to the SU from the SU side of the network is possible only if the SU's Opmode is "OFF."

SU Switch 2 - TCP/IP access to the SU from the AP side of network requires that the SU's switch 2 (SW 2 – TCP/IP for AP) be "ON." Default setting for SW 2 (from factory) is "ON."

AP and SU Switch 5 – In order to utilize the radio's HTTP Browser interface, switch 5 (SW 5) must be "ON." Default setting for SW 5 (from factory) is "ON."

Browser Interface

The HTTP browser interface is an easy-to-use, configuration and management tool. The web pages originate from the radio itself, so no additional software is needed on the managing PC other than a web browser.

The browser interface's functionality is a subset of the commands available in the command line interface (CLI). To use the browser interface, the following must be present:

- An Ethernet connection between a PC and the radio
- Set your PC's Ethernet properties to a subnet that is routable to the radio (radio default IP address=**192.168.100.100**)
- A web browser (i.e. Microsoft Internet Explorer)

In order to use the browser interface, simply connect the radio to a PC and type the radio's IP address into the web browser. This will bring up the Login page.

Note: Only one user can have an HTTP session with a given radio at a time. The log out timer is set to five minutes.

Note: Most pages are similar for Access Points and Subscriber Units. When there are significant differences, both are included in this text. With each page there is a brief description of the major features. For more discussion on any feature see the Command Set Reference, or click the Help hyperlink.

Figure 4-3: Browser Interface Login Page

Type the password (default **trango**) and continue. This will bring up the radio's System Information page.

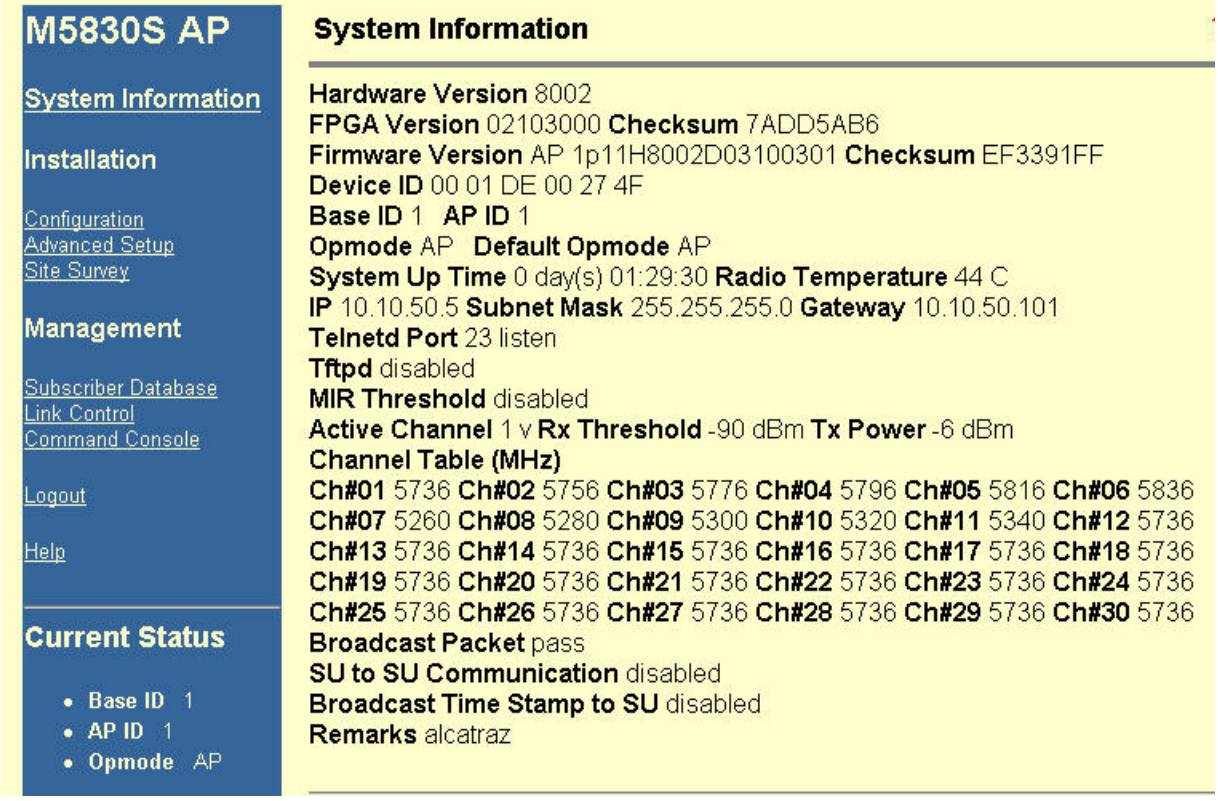

Figure 4-4: Web Browser System Information Page

Figure 3-4 shows the System Information page for an Access Point. Basic system information for a subscriber unit is similar, and is covered in detail later in this text.

The following describes the primary features and pages of the HTTP Browser interface:

Navigation Column: The blue rectangular column on the left of all pages. The top displays the model number of the radio to which you are connected. On the bottom of the Navigation Column is the Current Status of the radio, including its Base ID, AP ID, and current Opmode. In addition, there are the following links:

System Information Page: Shows most of the basic configuration parameters of the radio. It is the first page shown after login.

Configuration Page: The essential parameters, such as Base ID, channel, and polarization, are set here.

Advanced Setup Page: The advanced RF parameters, such as Transmit Power, are set here.

Site Survey Page: From here, in Opmode "OFF," the user can conduct a spectrum analysis.

Subscriber Database Page: This is the page that defines which SUs can associate with the AP.

Link Control Page: With this page you can determine which SUs are connected, and how they are performing.

Command Console Page: Runs any console command that is not interactive (i.e. ***ipconfig***). The results are reported back on the HTTP screen. For a complete list of console commands, type "help" in the entry field.

Logout Link: This will end the current HTTP session with the radio.

Help Page: The Browser Interface features useful Help pages that explain all listed parameters. To access the help pages click on the Help link. For a complete description on the use of the Browser Interface, see Appendix A.

Command Line Interface

Although most radio functions can be managed using the browser interface, the command line interface (CLI) does provide slightly more functionality. The CLI can be accessed through Telnet (all radios), or via the serial port (excluding FOX radios).

Telnet

Open a command prompt (DOS) session on your PC. Open a Telnet session by typing:

telnet [<ip address of radio>]

Example:
C:>telnet 192.168.100.100

All Trango radios (APs and SUs) are factory pre-configured with a default IP address of 192.168.100.100. In Telnet you will be greeted with the current hardware and firmware information, and prompted for a password. Type in the password and press enter. The factory default password is **trango.**

To terminate a CLI session (Telnet or Serial) type the command ***logout***.

Note: Type ***help*** or ***?*** for a listing of all CLI commands. Type ***help [<command>]***, for the syntax of a particular command.

The majority of the CLI commands will be covered throughout this text as well as in Appendix D -- Command Set Reference.

Troubleshooting

If you can not telnet into the radio or open an HTTP browser session, check your cable connections to ensure proper use of cross-over vs. straight-through cable, and ensure your PC's subnet is routable to the radio's IP address. If you still cannot access the radio's management interfaces, consult the troubleshooting guide available at http://www.trangobroadband.com/support/appnotes_web.htm.

Reset Button on FOX Series Radios

FOX Series radios feature a reset button that can be pressed with a small object such as a paper clip. Pressing the reset button will reset the radio's IP address to factory default of ***192.168.100.100***, and password ***trango***. The reset button can be useful if you forget or are unsure of the radio's IP address/password.

Serial Port on M5830 Series Radios

M5830 Access Points and Subscriber Units feature a serial port. The serial port is useful in the event that the radio cannot be accessed via TCP/IP (HTTP or Telnet). A Terminal Emulation program (such as HyperTerminal on the Windows operating system) can be used to access the radio's CLI using the radio's serial port, which is located behind the RJ-11 access cover on the bottom of the radio. A serial programming cable has been provided with each AP for this purpose. The same cable may be used for subscriber units. To terminate a CLI session (Telnet or Serial) type the command ***logout***. Type ***help*** or ***?*** for a listing of all CLI commands. Type ***help [<command>]*** for the syntax of a particular command.

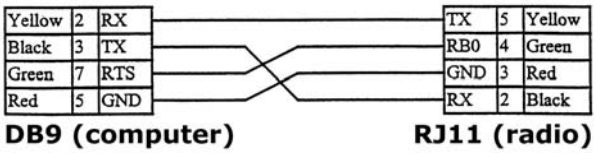

Figure 4-5: Pin-outs for Serial Cable

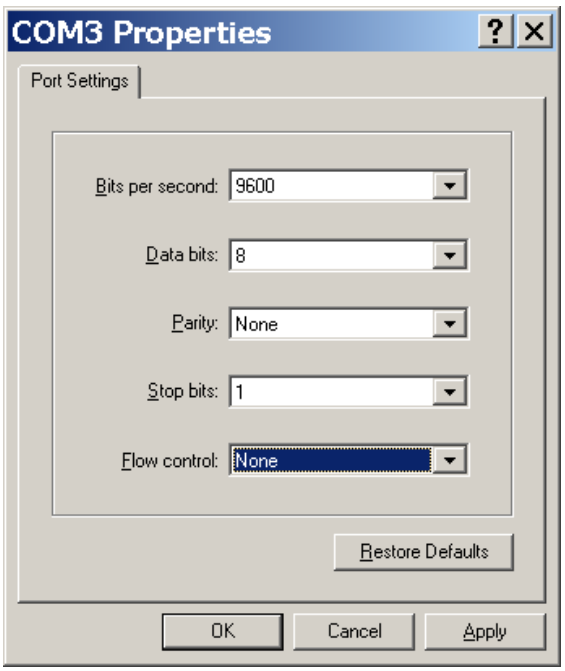

Figure 4-6: Terminal Settings

Note: Serial management (via the RJ-11 port) is possible on both APs and SUs regardless of Opmode and switch settings.

Note: If you have forgotten your password, follow the following directions:

1. Connect you PC to the radio with the serial cable.
2. Open HyperTerminal.
3. Power cycle the radio.
4. While it is loading, you will be able to see this in HyperTerminal, press ***enter***.
5. Type ***resetpassword***.
6. Type ***main***. This will continue the loader.

The password is now ***trango***.

Section 5 Basic Configuration via Browser Interface

This section describes a few more basic concepts and how to establish a basic wireless link between the AP and the SU, using the Browser (HTTP) Interface. This section addresses only the most basic steps in establishing a link in the lab, or a bench-top environment. It is highly recommended that you read the other sections of this manual to gain an understanding of all important configuration parameters and procedures prior to deploying any wireless equipment.

In this section you will:

- Learn about AP and SU Basic Configuration Screens and Parameters
- Populate Access Point's Subscriber Unit Database (SUDB) with at least one SU
- Configure Other Basic AP Parameters
- Configure Basic SU Parameters
- Establish a Wireless Link
- Evaluate Link Quality

The Access5830 uses the concept of "association" to indicate that the APs and SUs are communicating. If all parameters are properly set, the AP will begin actively searching for the SUs in its SUDB. Once an active SU is detected, the authentication and association process will begin.

Essentials to Establish a Wireless Link

- Base ID in AP and SU must match
- SU ID and MAC Address of SU must match an entry in the SUDB
- AP's RF Channel and Polarization must exist in the SU's channel scan table
- AP must be in Opmode "AP"
- SU must be in Opmode "SU"
- Adequate signal strength must be received at each radio

If all of these parameters are met, and if the AP and SU are within range and properly aligned, the wireless link will automatically establish itself and Ethernet traffic will begin to pass between the radios.

✐ Note: This section utilizes the Browser Interface as the configuration tool. For the equivalent CLI commands, see Appendix B.

Configuring AP's Subscriber Unit Database

Prior to establishing a wireless link, the user must configure the Subscriber Unit Database (SUDB) in the AP with each SU's MAC address and related settings. The subscriber unit database includes detailed information about each SU. Use the Subscriber Database page to add, modify, and delete SUs. The key information for each SU includes the following:

SU ID: User Definable Subscriber Unit ID (1…8190)

TYPE: PR Priority or REG Regular. Priority SUs are favored in the dynamic polling process and thus respond with less latency than regular SUs.

SU to SU: Group # (1..F in hex) for SU to SU communications. Only SUs with same SU to SU group # may communicate with each another.

✐ Note: SUs using SU to SU communication must be on the same subnet!

CIR: Committed Information Rate. Minimum rate (measured in Kbps) at which the AP will attempt to deliver bandwidth to that SU. Maximum setting is 9999.

MIR: Maximum Information Rate. Maximum rate (measured in Kbps) at which the AP will attempt to deliver bandwidth to that SU. Maximum setting is 9999.

DEVICE ID: MAC address of the SU.

To set up an SU in the SUDB, complete the following steps:

1. Connect to the AP (see Getting Started), and open the Subscriber Database page.

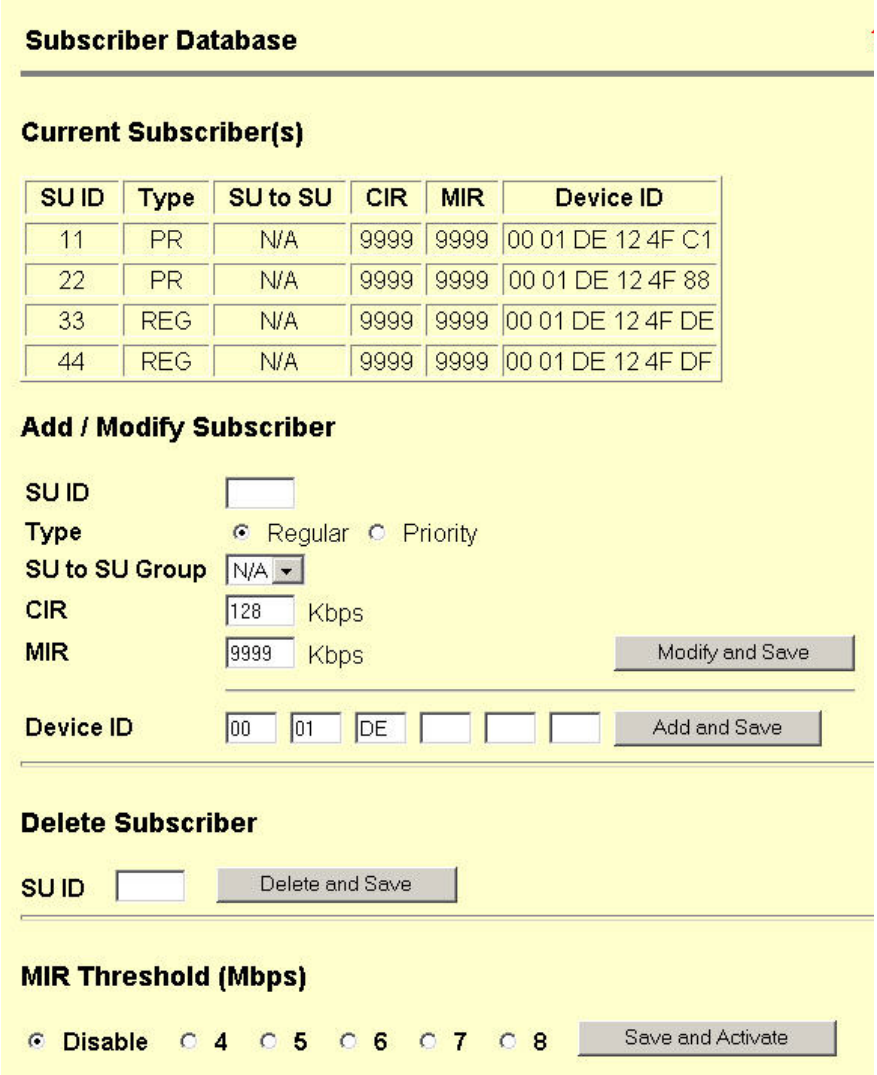

2. Enter the SU ID.
3. Select either PRIORITY or REGULAR.
4. If SU will be part of an SU to SU group, enter the SU to SU group number.

Note: SUs using SU to SU communication must be on the same subnet!

5. Enter the SU's CIR.
6. Enter the SU's MIR.
7. Enter the SU's Device ID.
8. Click Save and Activate changes.

Important! Always remember to Save and Activate changes, or the SUDB will revert back to its previous state after a power cycle or reboot.

Configure Other Basic AP Parameters

In addition to setting up the SU in the SU Database, the following settings from the AP's Configuration page must be set (or left at default).

Base ID: User definable base station ID (1-127); typically assigned to a group of APs at a particular cell site. The Base ID in the AP must match the Base ID in the SU in order for the link to be established. This parameter can only be changed while in Opmode "OFF."

AP ID: User definable AP ID (1-255). This parameter is for informational purposes only and does not play a role in the establishment of a link. This parameter can only be changed while in Opmode "OFF."

IP Address, Subnet Mask, and Gateway: The IP configuration of the radio for configuration and network management purposes. Since this is a layer-II device, these parameters do not play a role in establishing a wireless link.

Default Opmode: Operation mode of the radio after a power cycle or reboot. When the radio enters Opmode "AP," it will be transmitting. When the radio enters Opmode "OFF," the radio is not transmitting, but can be accessed via the Ethernet port. The radio can be put into Opmode "OFF" regardless of its default Opmode by telneting into it within the first 30 seconds after a power cycle or reboot.

Active Channel/Polarization: The current channel and antenna polarization of the unit when in Opmode "AP."

To configure the AP's other basic settings, complete the following steps:

Connect to the AP (see Getting Started) and open the Configuration page.

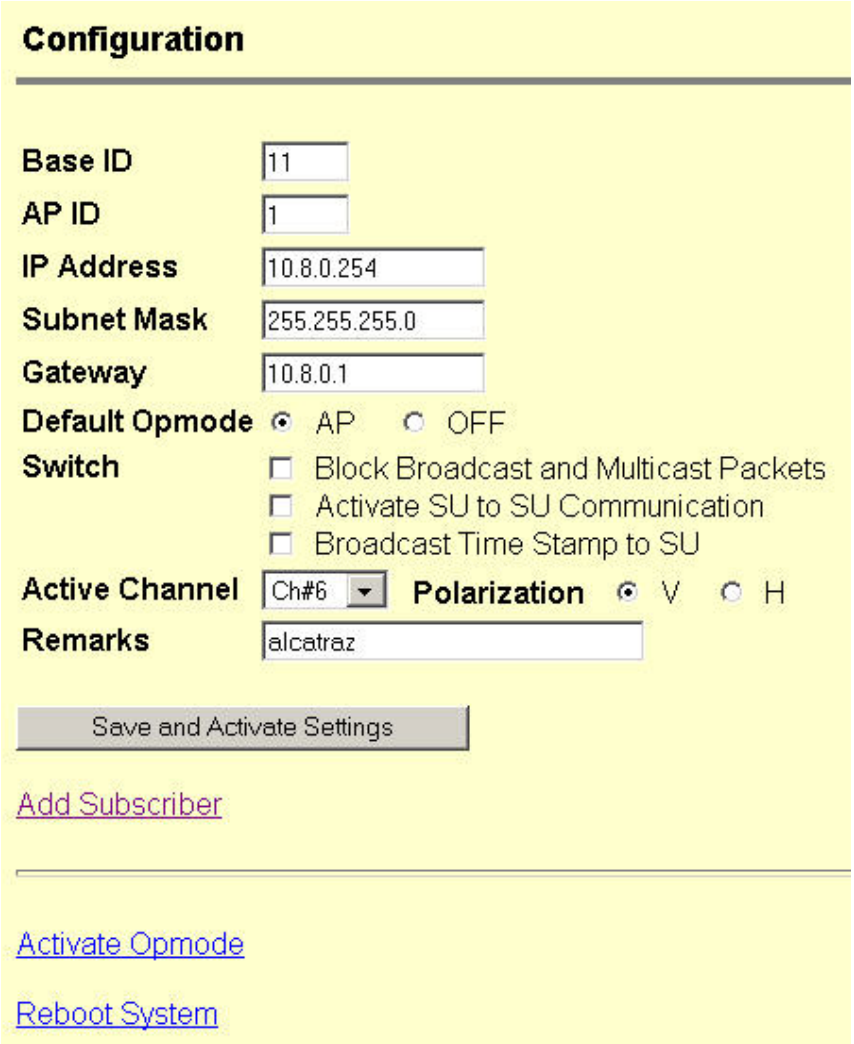

1. Set the Base ID. (Must match the SU.)
2. Set the AP ID. (Used to identify the AP, not essential in establishing a link.)
3. Set the IP, Subnet, and Gateway. (Not essential for a link.)
4. Set the Default Opmode to "AP."
5. Set the Active Channel and Polarization. (Must match at least one set in the SU Scan Table.)
6. Click Save and Activate Settings.
7. If you changed the IP address, log onto the radio using the new IP address.
8. Start Opmode “AP” by rebooting (click Reboot System), or click Activate Opmode.

At this point the AP will begin actively searching for any SU in its SUDB. Once an active SU is detected, the authentication and association process will begin. When the AP is in Opmode “AP,” the red LED on the bottom of the AP should be solidly lit, indicating that the radio is in Opmode “AP” and transmitting.

Configure Basic SU Parameters

Each SU must be set up with basic information to communicate with the AP. At a minimum the Base ID must match the Base ID of the AP, the SU ID must match the SU ID in the AP's SUDB, and the AP's active channel must exist in the SU's AP Scan Sequence.

To set up the SU, complete the following steps:

1. Connect to the SU (see Fundamentals), and open the Configuration page.

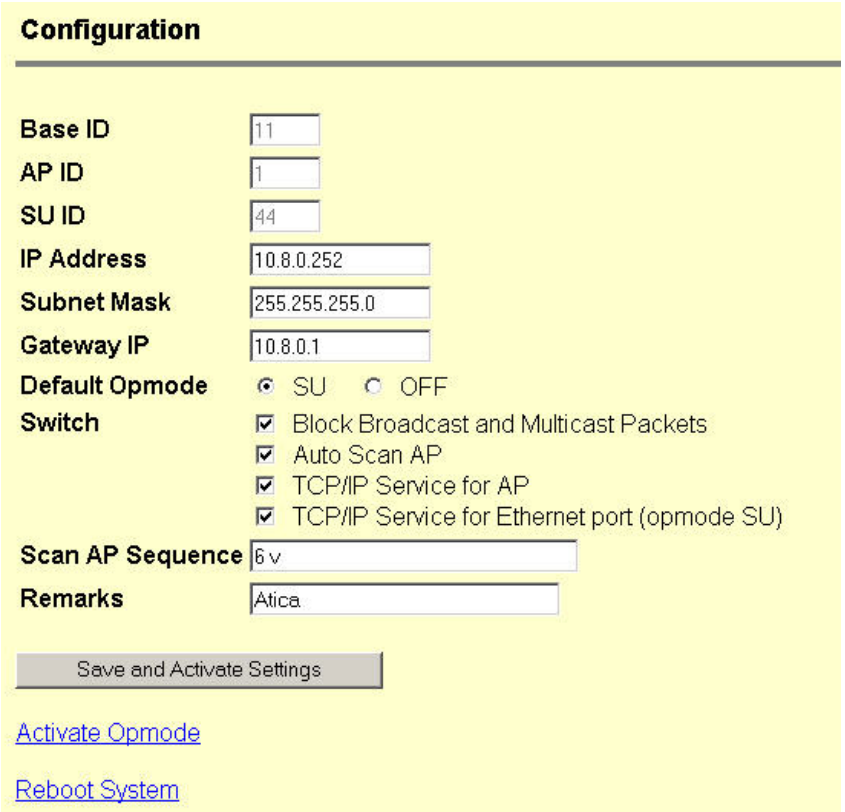

2. Set the Base ID. (Must match the AP.)
3. Set the SU ID. (Must match the entry in the AP's SUDB.)
4. Set the IP, Subnet, and Gateway. (Not essential for a link.)
5. Set the Default Opmode to "SU."
6. Input a series of Channels and Polarizations into the Scan AP Sequence, including the one on the AP.
7. Click Save and Activate Settings.
8. Reboot System. (This will terminate your HTTP session.)

At this point, if all of the parameters have been set correctly and the radios are within range, association between AP and SU will occur.

LED Summary

At this point it is useful to learn about the various LEDs, which can be found on the bottom of Access5830 radios (both M5830 series and FOX series). These LEDs can assist the user in determining radio and link status.

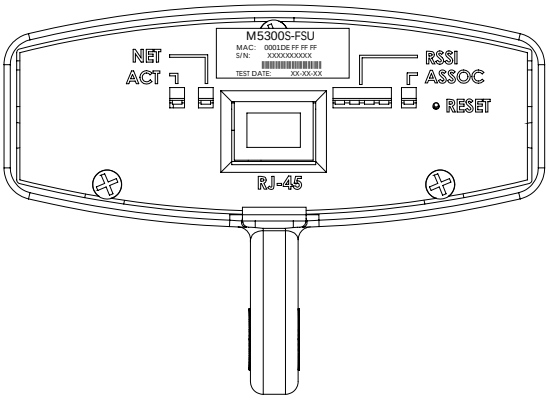

Figure 5-1: Bottom of FOX Radio with LEDs

FOX Series Radio LED Guide

ACT – Indicates Ethernet Receive/Transmit activity.

NET – This LED lights when connected to a 100 BaseT network. The LED remains unlit when connected to a 10 BaseT network

RSSI – Relative Signal Strength Indicator. See page Antenna Alignment section for more details.

Lit LEDs	Signal Strength
0 LED	-80 dBm
1 LED	-75 dBm
2 LED	-70 dBm
3 LED	-65 dBm
4 LED	-60 dBm or greater

ASSOC – This LED indicates one of four statuses:

1. Off - when there is no power at the radio.
2. Blinks once every second - unit is powered on, but in Opmode "OFF."
3. Blinks twice per second - unit is in Opmode "SU," and is scanning for an AP.
4. Solid On - unit is associated with an AP.

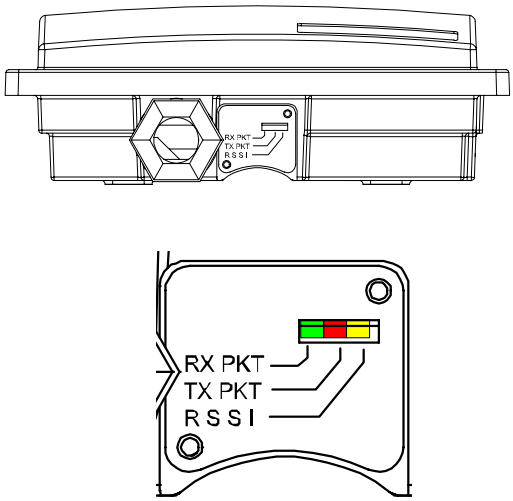

Figure 5-2: Bottom of M5830 Radio with LEDs

M5830 LED Guide

Rx/Green – Indicates RF (wireless) receive activity

Tx/Red – Indicates RF (wireless) transmit activity

RSSI/Yellow – Relative Signal Strength Indicator

LED	Signal Strength
Not Lit	< -80 dBm
Blinking	> -80 dBm < -65 dBm
Solid	> -65 dBm

M5830S-AP -60

LEDs	State of the Radio
	Associated (Green and Yellow may be blinking)
	AP is transmitting, but nothing is associated
	No power or Opmode "OFF"

M5830S-SU and M5830S-SU-EXT

LEDs	State of the Radio
	Associated (All may be blinking)
	SU is receiving, but not associated
	No power, Opmode "OFF," or No AP present

Evaluate Link Quality

It takes approximately 60 seconds for the radios to complete the boot-up cycle, which includes switching on the Opmode, handshaking, and association. If more than one scan channel exists in the SU Scan Table, or if the AP is busy servicing many SUs, the association process may take slightly longer. The radio's firmware includes several useful tools to assist in determining which SUs are associated, and the quality of each link. The LEDs are a quick method for verifying link quality. Another useful tool is the Link Control page.

Link Control

SU Association Status

Associated	107
Associating	
Power Off	11, 22, 33, 44

RF Link Loopback Test

SU ID [ ] Duration [1] min(s) [Loopback Test]

SU Ranging / RSSI Test

SU ID [ ] [Ranging Test]

Power Level All Associated SUs

[Powerleveling] (Target RSSI: -60 dBm)

Using this page the user can immediately see which SUs have associated. In the page shown, SU ID# 107 is associated, and SU IDs 11, 22, 33, and 44, are not. Consider "Power Off" status synonymous with "not associated."

Power leveling takes place automatically every time an SU associates, so in most cases it is not necessary to manually run power leveling. A thorough explanation of this feature is in the Configuration section.

RF Link Loopback Test

This is the built-in performance test. Specify an SU ID and time in minutes to conduct the test. The test is prioritized, so it will take precedence over all other traffic. 1600 byte packets are sent and received between the SU and AP at 50 millisecond intervals over the time specified. The success rate, and number of packets received, in bytes, is reported for SU and AP.

SU ID 107 **Duration** 1 min(s)

	Bytes	Success Rate
AP Sent	332640	100 %
SU Received	332640	100 %
AP Received	332640	100 %

SU Ranging / RSSI Test

Reports the distance from AP in miles, SU TX Power, SU temperature, and the received signal strength for uplink and downlink for the specified SU. Use a link budget calculator to analyze results.

SU ID 107

Distance	RSSI from SU	RSSI from AP	SU Tx Power	SU Radio Temp
0.0 mi	-57 dB	-40 dB	-12 dBm	46 C

Advanced Setup Page

The Advanced Setup page includes several important parameters including RF TX Power, RF RX Threshold, and Target RSSI from SU (AP only). This screen also includes the radio's channel table, which can be configured by the user.

Note: M5830 Series radios include both UNII and ISM bands on this screen. FOX Series radios only include either the ISM or UNII band.

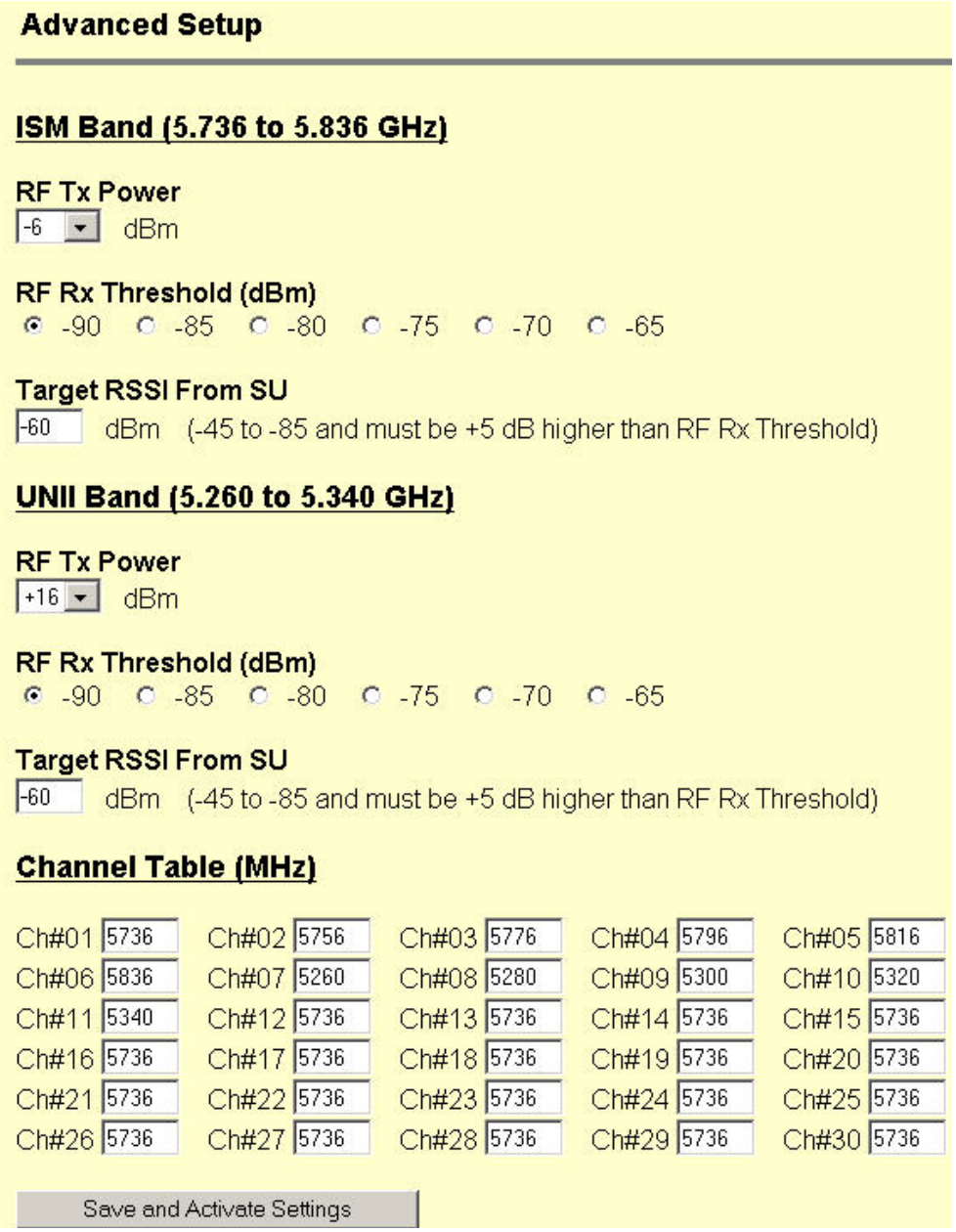

RF TX Power: Sets the conducted RF power output from the radio. This does not include antenna gain. A higher number is more powerful.

RF RX Threshold: Sets the receive threshold of the radio.. By increasing the RF RX Threshold, the user effectively reduces the receiver sensitivity of the radio. The advantage of increasing the receiver threshold is

that the radio will not process signals received below this level, so it is very useful for mitigating interference. The disadvantage of increasing the receiver threshold is a corresponding reduction in range due to reduced receiver sensitivity. For a smaller radius of operation use a higher threshold (-65 is higher than -70).

Target RSSI from SU: Used by the power leveling process to automatically adjust the RF output power level of all SUs in a sector so the signal strength from each SU as measured at the AP, will be roughly equal. Make sure that all SUs are power leveled after changing this number (See Link Control page).

Channel Table: Assigns channel numbers to actual frequencies of operation. Default settings allow the largest number of channels within the band, while still maintaining a 20 MHz channel width.

Other Key Parameters

This section describes the remainder of the parameters listed on the System Information page. Most of these parameters are the same for both APs and SUs.

System Information

Hardware Version 8002
FPGA Version 02103000 **Checksum** 7ADD5AB6
Firmware Version AP 1p11H8002D03100301 **Checksum** EF3391FF
Device ID 00 01 DE 00 27 4F
Base ID 1 **AP ID** 1
Opmode AP **Default Opmode** AP
System Up Time 0 day(s) 01:29:30 **Radio Temperature** 44 C
IP 10.10.50.5 **Subnet Mask** 255.255.255.0 **Gateway** 10.10.50.101
Telnetd Port 23 listen
Tftpd disabled
MIR Threshold disabled
Active Channel 1 v **Rx Threshold** -90 dBm **Tx Power** -6 dBm
Channel Table (MHz)
Ch#01 5736 **Ch#02** 5756 **Ch#03** 5776 **Ch#04** 5796 **Ch#05** 5816 **Ch#06** 5836
Ch#07 5260 **Ch#08** 5280 **Ch#09** 5300 **Ch#10** 5320 **Ch#11** 5340 **Ch#12** 5736
Ch#13 5736 **Ch#14** 5736 **Ch#15** 5736 **Ch#16** 5736 **Ch#17** 5736 **Ch#18** 5736
Ch#19 5736 **Ch#20** 5736 **Ch#21** 5736 **Ch#22** 5736 **Ch#23** 5736 **Ch#24** 5736
Ch#25 5736 **Ch#26** 5736 **Ch#27** 5736 **Ch#28** 5736 **Ch#29** 5736 **Ch#30** 5736
Broadcast Packet pass
SU to SU Communication disabled
Broadcast Time Stamp to SU disabled
Remarks alcatraz

Hardware Version: Hardware version is factory-set and can not be changed by user.

FPGA Version: Field programmable gate array firmware currently loaded on the radio. Normally the FPGA firmware will not require upgrading.

Firmware Version: Main firmware. In this example, the version part of the string is 1p11 (v1.11), the hardware code is H8002, and the remainder of the string is a date code.

Device ID: MAC address of the radio.

Telnetd Port: User changeable telnet port of radio.

TFTPD: Current status of TFTP daemon. Used for uploading firmware.

MIR Threshold: Enable/Disable the Maximum Information Rate (MIR) Threshold. The MIR Threshold is the aggregate throughput on the AP at which the AP will start to enforce CIR rules for SUs.

Active Channel: The channel currently being used by the radio.

RFRX Threshold: Sets the receive threshold of the AP. The AP will not process signals received below this level, so it is very useful for mitigating interference. For a smaller radius of operation, use a higher threshold (-65 is higher than -70).

Broadcast Packet: This software switch (0) enables/disables the blocking of Ethernet control packets, except ICMP and ARP, to reduce the amount of unnecessary overhead introduced into the wireless link.

SU to SU Communication: If this AP switch is on, SUs with matching SU to SU groups (except group 0) can communicate in peer-to-peer mode via the AP, without the need for a router behind the AP.

✐ Note: SUs using SU to SU communication must be on the same subnet!

Broadcast Time Stamp to SU: If this AP switch is on, the AP will send a copy of the real time clock to the SU every 60 seconds. May be used for tracking statistics when using SNMP.

Remarks: User definable radio information (i.e. customer name, address of installation, and so on). Maximum 28 characters can be stored

Site Survey Page

This is a useful tool for detecting interference. It is not meant as a substitute for a Spectrum Analyzer. The radio must be in Opmode "OFF" in order to use this feature. Enter the number of minutes desired for the survey, and select the polarization. Click "Start Survey." A survey of the default 6 channels will be performed. Results are reported in dBm per channel as average and peak. A channel is reported to be "Clear" if the peak and average are below the RF RX Threshold by more than 8 dB.

Section 6 Basic Configuration via CLI

It is important for users to be familiar with the CLI interface as well as the Browser Interface. This section covers how to utilize the radio's CLI interface to establish a working wireless link. Much of the information presented here is similar to the information presented in Section 5.

This section covers the most common settings using the CLI. Topics include:

- Access Point Basic Settings
- Subscriber Unit Basic Settings
- Subscriber Unit Database Settings

A comprehensive treatment of radio settings is found in Appendix B -- Command Set Reference.

See the "Getting Started" section for a description of how to access the radio via Telnet or Serial Interface

Access Point Basic Settings

After logging into an AP or SU , it is good practice to type the ***sysinfo*** command to see the radio's basic system information. Example (Access Point):

```
#> sysinfo
[Hardware Version] 8002
[FPGA Version] 02103000 [Checksum] 7ADD5AB6
[Firmware Version] AP 1p11H8002D03100301 [Checksum] EF3391FF
[Device ID] 00 01 DE 00 27 4F [Base ID] 11 [AP ID] 1
[System Up Time] 0 day(s) 00:55:51
[Radio Temperature] 43 C
[Opmode] ap [Default Opmode] ap [Opmode Start] 30 sec
[IP] 10.10.50.5 [Subnet Mask] 255.255.255.0 [Gateway] 10.10.50.101
[Httpd Port] 80 [Httpd Status] listen
[Telnetd Port] 23 [Telnetd Status] connected (10.10.50.1,1039)
[Tftpd] disabled
[MIR Threshold] off [MIR Threshold Kbps]  4096
[Active Channel] 6 v 5836 MHz
[RF Rx Threshold] -90 dBm
[RF Tx Power] 22 dBm
Channel Table: (MHz)
[Ch#01] 5736 [Ch#02] 5756 [Ch#03] 5776 [Ch#04] 5796 [Ch#05] 5816 [Ch#06] 5836
[Ch#07] 5260 [Ch#08] 5280 [Ch#09] 5300 [Ch#10] 5320 [Ch#11] 5340 [Ch#12] 5736
[Ch#13] 5736 [Ch#14] 5736 [Ch#15] 5736 [Ch#16] 5736 [Ch#17] 5736 [Ch#18] 5736
[Ch#19] 5736 [Ch#20] 5736 [Ch#21] 5736 [Ch#22] 5736 [Ch#23] 5736 [Ch#24] 5736
[Ch#25] 5736 [Ch#26] 5736 [Ch#27] 5736 [Ch#28] 5736 [Ch#29] 5736 [Ch#30] 5736

[Broadcast Packet] pass
[Remarks] Alcatraz
```

The user can change many of these parameters. A description of each of these changeable parameters, along with the related command, is shown in the table below.

Important! When changing settings, it is usually necessary to type the ***save ss*** command in order to update the radio's flash memory. If you do not type the ***save ss*** command, the settings will be lost the next time the radio is rebooted or powercycled. The command ***save ss*** is equivalent to the ***updateflash systemsetting*** command.

.

Table 2: Reference Table of Basic AP System Information

AP SYSTEM INFORMATION PARAMETERS AND RELATED COMMANDS		
AP Parameter	**Description**	**Related CLI Command**
Device ID	MAC Address of AP	N/A
Base ID	Specifies the cell or cluster to which the AP belongs. Base ID is one of three key pieces of	***set baseid <baseid>*** Example:

AP SYSTEM INFORMATION PARAMETERS AND RELATED COMMANDS		
AP Parameter	**Description**	**Related CLI Command**
	information, along with active channel, and SUDB information for the establishment of a link.	#>Set baseid 10
AP ID	Informational parameter used to provide a unique number for each AP. Useful for AP sector planning. Please note that AP ID is not used by the system for SU authentication.	***set apid <apid>*** Example: #>Set apid 3
Opmode	Current Opmode of radio.	***opmode ap [<y>]*** This sets radio in Opmode "AP." To set radio to Opmode "OFF," reboot, and access radio via Ethernet port within the first 30 seconds.
Default Opmode	Determines the Opmode ("AP" or "OFF") of the radio after reboot/power cycle. When the parameter is set to "AP," the radio will progress into Opmode "AP" automatically after reboot/power cycle.	***set defaultopmode <ap | off>*** Example: #>set defaultopmode ap
Opmode Start	Determines the amount of time the radio will remain in Opmode OFF after reboot before progressing to the default Opmode.	***set defaultopmode ap <time (sec)>*** Example: #>set defaultopmode ap 60
IP Subnet Gateway	IP, Subnet, and Gateway address of radio.	***ipconfig [<new ip> <new subnet mask> <new gateway>]*** Example: #>ipconfig 10.1.1.2 255.0.0.0 10.1.1.1
TFTPD Status	TFTPD status (on or off). TFTPD should be turned on to import file into radio (such as new firmware). Default is off. TFTPD will revert to Off after rebooting.	***tftpd [<on | off>]***
Service Radius	User specified estimate of the distance of the furthest SU the AP will serve. Based on this information, the AP will determine the maximum wait time for an SU to respond to a poll before it starts to poll the next one. Note: This parameter has no effect on the actual coverage radius of the radio.	***set serviceradius [<ism|unii> <miles>]*** Examples: #>set serviceradius ism 5 #>set serviceradius unii 2
MIR Threshold (On or Off)	Enable/Disable the Maximum Information Rate (MIR) Threshold.	***set mir <on | off>***

AP SYSTEM INFORMATION PARAMETERS AND RELATED COMMANDS		
AP Parameter	**Description**	**Related CLI Command**
MIR Threshold Kbps	User specified MIR Threshold to determine total throughput level at which the AP serves only CIR (committed information rate) to associated SUs. When MIR Threshold is disabled, the AP will serve MIR for all its SUs. When MIR Threshold is activated, and the network traffic exceeds the MIR threshold, the AP will only serve CIR for all its SUs. When MIR Threshold is activated, and the network traffic does not exceed the MIR threshold, the AP will still serve MIR for all its SUs.	***set mir threshold [<Kbps>]*** Example: #>set mir threshold 2000
Active Channel	Current RF channel and polarization (v)ertical or (h)orizontal.	***freq writescan [<ch#> <v | h>]*** Example: #>freq writescan 5 v **This command will change the channel of the AP to 5, with vertical polarization.**
RF RX Threshold	Specifies the receiver sensitivity of the AP. It is a powerful tool when the radio is in a noisy environment. AP will block out any signal received that is below the RF RX threshold. Separate settings exist for both ISM and UNII bands.	***rfrxth [<ism|unii> <-90 | -85 | -80 | -75 | -70 | -65>]*** examples: #>rfrxth ism –70 #>rfrxth unii -90
RF TX Power	Current transmit power of the AP not including antenna gain.	***power [<setism|senunii> <min | max | dBm>]*** Examples: #>power setism 10 #>power setunii 4
Channel Table	Lists the assigned frequencies to each channel. Note that default channels 1 – 6 are assigned to ISM band, and channels 7 – 11 are assigned to UNII band. All channels may be re-assigned as desired by the user.	***freq writechannel [<ch#> <freq>]*** Example: #>freg writechannel 20 5785 This command will change channel 20 to 5785 MHz.
Broadcast Packet Filter	This software switch (0) enables/disables the blocking of Ethernet control packets, except ICMP and ARP, to reduce the amount of unnecessary overhead introduced to the wireless link.	***sw 0 [<on | off>]*** (default is on) Example: #>sw 0 on
Remarks	User definable radio information (i.e. customer name, address of installation, and so on). Maximum of 28 characters can be stored.	***remarks [<remarks>]*** Example: #>remarks 123 Elm Street

Subscriber Unit Basic Settings

Log into the SU. To receive a comprehensive snapshot of the system's configuration info and status, type the command ***sysinfo***.

```
#> sysinfo
[Hardware Version] 0004
[FPGA Version] 03110601 [Checksum] 1D28DCC4
[Firmware Version] FSU 1p01H0004D03100101 [Checksum] 191D17BC
[Device ID] 00 01 DE 12 4F DF [Base ID] 11 [AP ID] 1 [SU ID] 44
[System Up Time] 0 day(s) 00:04:20
[Radio Temperature] 35
[Opmode] su [Default Opmode] su [Opmode Start] 30 sec
[IP] 10.8.0.252 [Subnet Mask] 255.255.255.0 [Gateway] 10.8.0.1
[Httpd Port] 80 [Httpd Status] listen
[Telnetd Port] 23 [Telnetd Status] connected (10.8.0.2,1041)
[Tftpd] disabled
[RF Tx Power] 22 dBm
[RF Rx Threshold] -90 dBm
Channel Table: (MHz)
[Ch#01] 5736 [Ch#02] 5756 [Ch#03] 5776 [Ch#04] 5796 [Ch#05] 5816 [Ch#06] 5836
[Ch#07] 5260 [Ch#08] 5280 [Ch#09] 5300 [Ch#10] 5320 [Ch#11] 5340 [Ch#12] 5736
[Ch#13] 5736 [Ch#14] 5736 [Ch#15] 5736 [Ch#16] 5736 [Ch#17] 5736 [Ch#18] 5736
[Ch#19] 5736 [Ch#20] 5736 [Ch#21] 5736 [Ch#22] 5736 [Ch#23] 5736 [Ch#24] 5736
[Ch#25] 5736 [Ch#26] 5736 [Ch#27] 5736 [Ch#28] 5736 [Ch#29] 5736 [Ch#30] 5736
[Channel Scan Sequence] 6 v
[Active Channel] 6 v  Disconnected
[Broadcast Packet] block [Auto Scan AP] on [TCP/IP for AP] on [TCP/IP LocalEth]on
[Remarks] Attica
[RF Rx] 0 kbps [RF Tx] 0 kbps [Eth Rx] 3 kbps [Eth Tx] 8 kbps
Success.
```

Many of these parameters can be changed by the user. A description of each of these changeable parameters, along with the related command, is shown in the table below.

Important! When changing settings, it is usually necessary to type the ***save ss*** command in order to update the radio's flash memory. If you do not type the ***save ss*** command, the setting will be lost the next time the radio is rebooted or power cycled. The command ***save ss*** is equivalent to the command ***updateflash systemsetting***.

Table 3: Reference Table of Basic SU System Information

SU SYSTEM INFORMATION PARAMETERS AND RELATED COMMANDS		
SU Parameter	**Description**	**Related CLI Command**
Device ID	MAC Address of the SU	N/A
Base ID	Specifies the cell or cluster to which the SU belongs.	***set baseid <baseid>*** Example: #>Set baseid 10
SU ID	Together with Base ID, it is the unique identifier of this SU used in association. It is used to execute commands from the AP to this specific SU.	***set suid <suid>*** Example: #>Set suid 3
AP ID	Informational parameter that shows to which AP the SU is associated. Please note that AP ID is not used by the system for SU authentication.	Informational Parameter
Opmode	Current Opmode of radio.	***opmode su [< y>]*** This sets the radio in Opmode "SU." To set the radio in Opmode "OFF," reboot and access radio via Ethernet port within the first 30 seconds.
Default Opmode	Determines the Opmode ("SU" or "OFF") of the radio after reboot/power cycle. When the parameter is set to "SU," the	***set defaultopmode <su | off>***

SU SYSTEM INFORMATION PARAMETERS AND RELATED COMMANDS		
SU Parameter	**Description**	**Related CLI Command**
	radio will progress into Opmode "SU" automatically after reboot/power cycle.	Example: #>set defaultopmode ap
Opmode Start	Determines the amount of time the radio will remain in Opmode "OFF" after reboot before progressing to the default Opmode.	***set defaultopmode su [<time (sec)>]*** Example: #>set defaultopmode su 60
IP Subnet Gateway	IP, Subnet, and Gateway address of radio.	***ipconfig [<new ip> <new subnet mask> <new gateway>]*** Example: #>ipconfig 10.1.1.3 255.0.0.0 10.1.1.1
TFTPD	TFTPD status (on or off). TFTPD should be turned on to import file into radio (such as new firmware). Default is off. TFTPD will revert to off after reboot/power cycle.	***tftpd [<on | off>]***
RF TX Power	Current transmit power of the SU not including antenna gain. This is controlled during the association process.	Informational Parameter
Channel Scan Sequence	Shows the various channels (in sequence) that the SU will scan while searching for an AP.	***freq writescan [<ch #> <h | v>]…*** Example: #>freq writescan 1 h 2 v 2 h 3 v
Active Channel	Shows the channel used in the current association, and "Associated" or "Disconnected" depending on the association status.	Information Parameter
Broadcast Packet Filter	This software switch (0) enables/disables the blocking of Ethernet control packets, except ICMP and ARP, to reduce the amount of unnecessary overhead introduced to the wireless link.	***sw 0 [<on | off>]*** (default is on) Example: #>sw 0 on
AP Autoscan	This software switch (1) is to turn AP autoscan on or off.	***sw 1 [<on | off>]*** (default is on)
TCP/IP for AP	This software switch (2), when on, allows users at the AP side of the network to telnet or HTTP into the SU.	***sw 2 [<on | off>]*** (default is on)
TCP/IP for Local Ethernet	This software switch (switch 6) when on, allows users on the wired side of the SU to telnet or HTTP into the SU.	***sw 6 [<on | off>]*** (default is on)
Remarks	User definable radio information (i.e. customer name, address of installation, and so on). Maximum 28 of characters can be stored.	***remarks [<remarks>]*** Example: #>remarks 678 Oak Ave
Counters: RF TX RF RX Eth TX Eth RX	These are averages of wired and wireless, transmit and received, traffic in Kbps.	Informational Parameter

Subscriber Unit Database (SUDB) Settings

Once you are familiar with the AP's basic system information, you are ready to add one or more SUs to the SUDB. There are three basic commands related to the SUDB: ***sudb add***, ***sudb view***, and ***save sudb.***

To add an SU to the database, you will need to know the following information:

1. SU ID (user defined – a unique integer that identifies the SU within this AP's SUDB)
2. MAC ID of SU (printed on the back of the SU)
3. Polling priority, either PRIORITY or REGULAR

   Note: SUs designated as PRIORITY will get polled more often by the AP.
4. CIR (Committed Information Rate) – minimum bandwidth the SU will be delivered from the AP in Kbps
5. MIR (Maximum Information Rate) – maximum bandwidth the SU will be delivered from the AP in Kbps

Note: Maximum settings for CIR and MIR are 9999 Kbps, which is equivalent to not using these settings.

To add an SU to the database, use the following command and syntax:

sudb add <suid> <pr | reg> <cir> <mir> <device id>
<suid>: SU identification (1~8190)
pr: priority user
reg: regular user
<cir>: committed information rate (0~9999)
<mir>: maximum information rate (0~9999)
<device id>: xx xx xx xx xx xx in hexadecimal (this is the MAC address of the SU)

Example:
#>sudb add 4 pr 9999 9999 F3 3C 50 67 89 D4

In this example SU #4 was added as a Priority SU with CIR and MIR both set to 9999. The MAC ID of this SU is F3 3C 50 67 89 D4.

Note: You can add up to 2000 entries in the SUDB. It is recommended that users not enter any more SUs than necessary since excessive numbers of inactive SUs in the database may negatively impact system performance.

To view the entries in the SUDB, type the command ***sudb view***.

Other important SUDB related commands are ***sudb delete*** and ***sudb modify***. See Appendix B for detailed descriptions of these commands.

Important! After updating the SUDB, type the command ***save sudb*** to save the SUDB. If you do not save, the SUDB file will revert back to its previous state after power cycle or reboot.

Section 7 Mounting Hardware

M5830 Series Radios (Access Points and Subscriber Units)

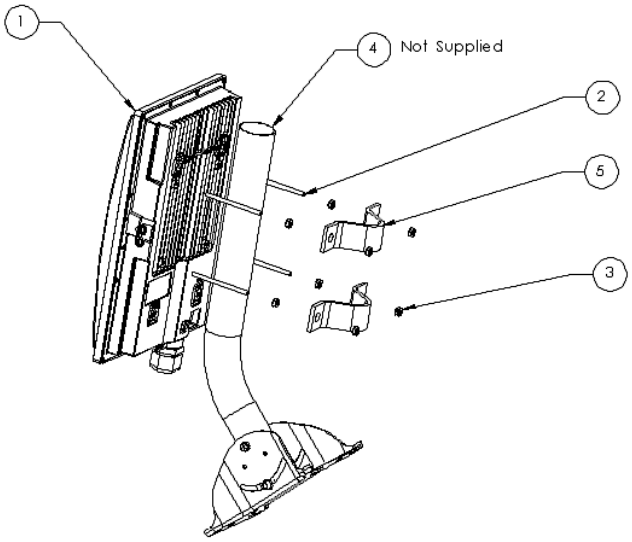

ITEM NO.	PART NUMBER	QTY.
1	Radio	1
2	#10 x 3" Threaded Rod	4
3	#10 Keps Nut	8
4	Mono Pod Mount (Not Supplied)	1
5	"V" Bracket	2

Figure 7-1: M5830 Mounting Hardware Assembly

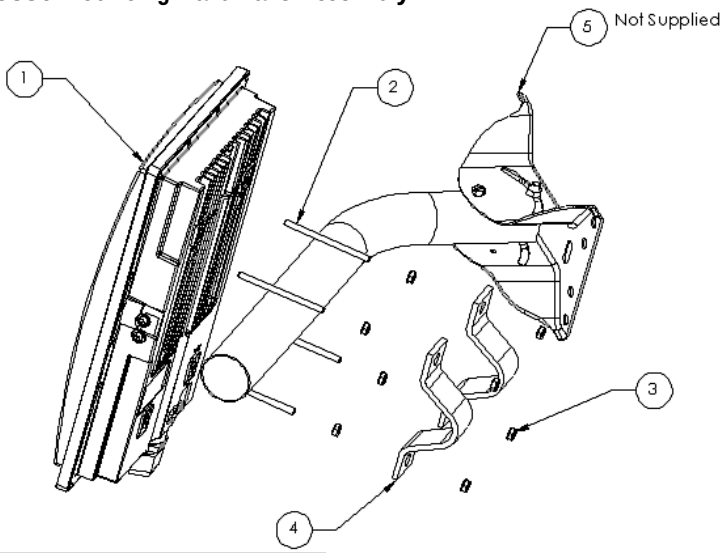

ITEM NO.	PART NUMBER	QTY.
1	Radio	1
2	#10 x 3" Threaded Rod	4
3	#10 Keps Nut	8
4	"V" Bracket	2
5	Mono Pod Mount (Not Supplied)	1

Figure 7-2: Alternative Mounting

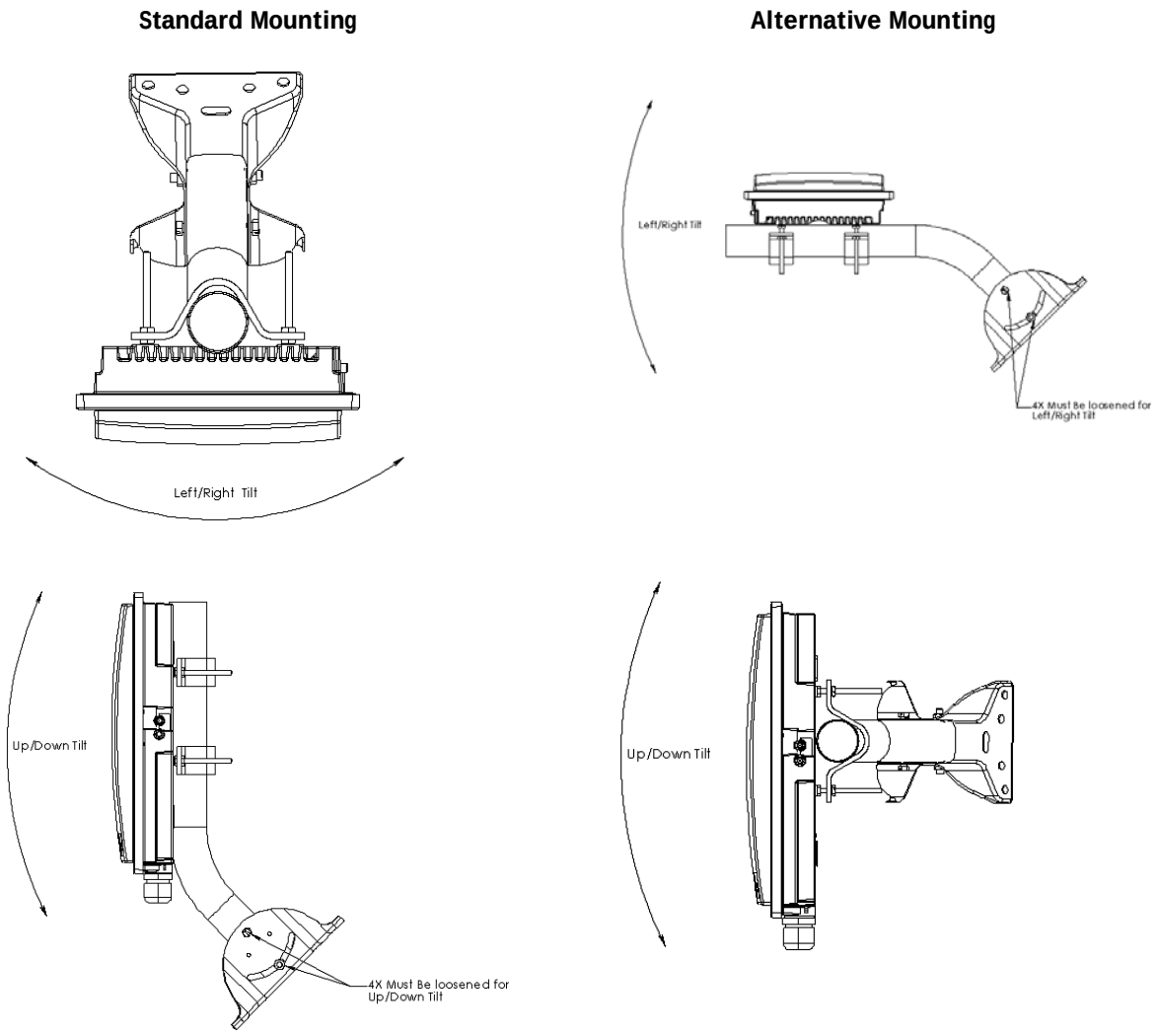

Figure 7-3: Articulation for M5830S-AP with Mono Pod Mount (not supplied)

FOX Series Radio Hardware and Mounting

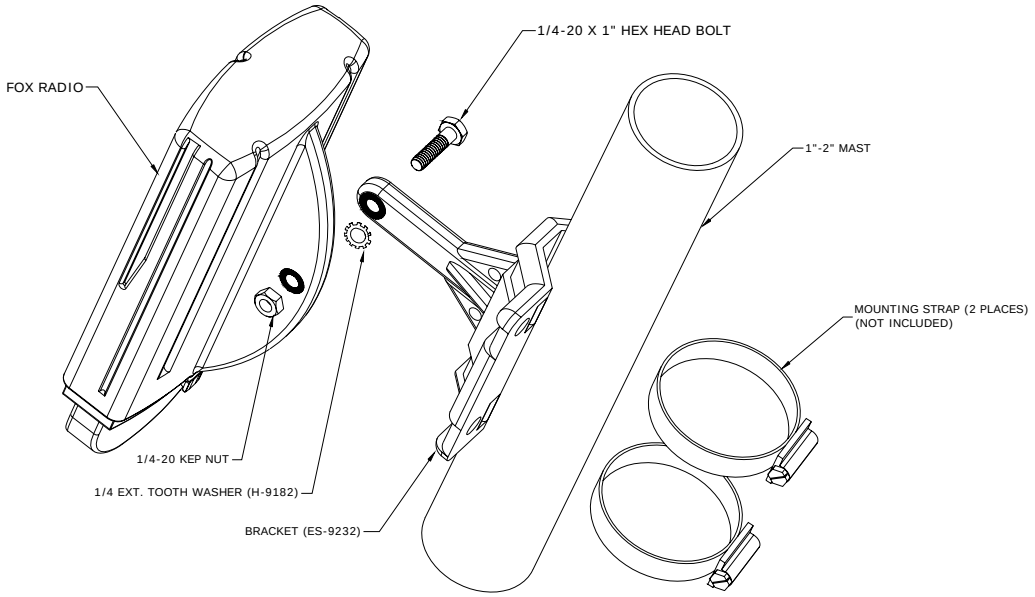

Figure 7-4: FOX Series SU Pole Mount (1" - 2" Diameter)

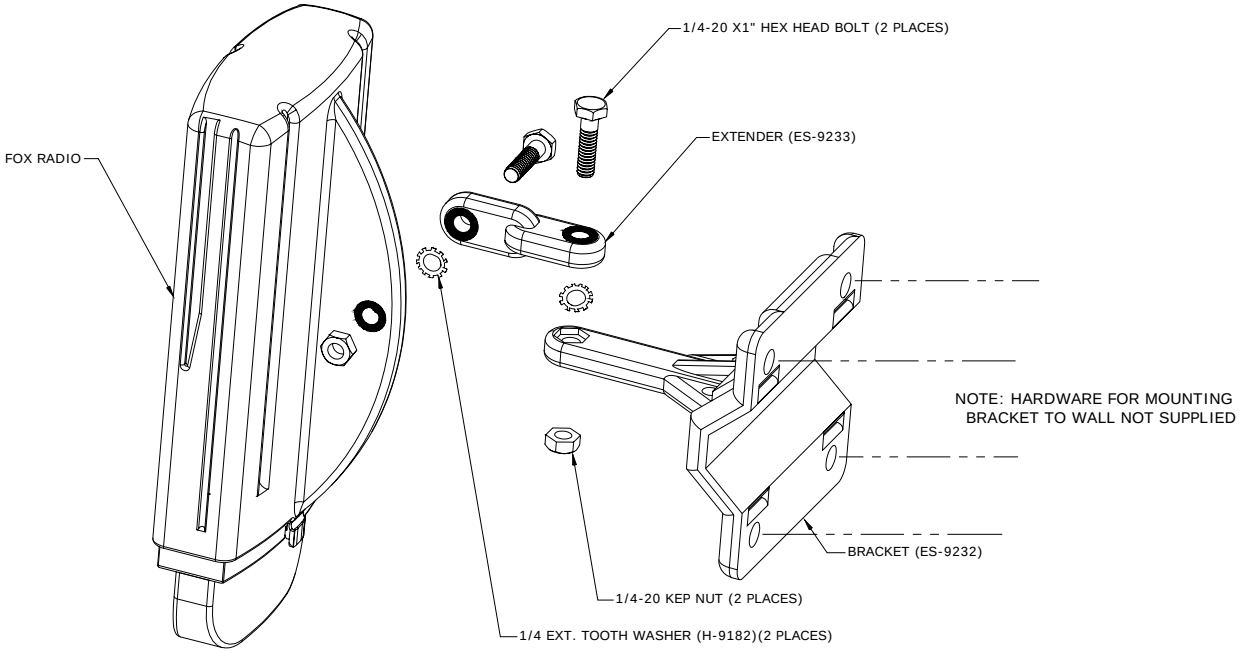

Figure 7-5: FOX Series SU Wall Mount

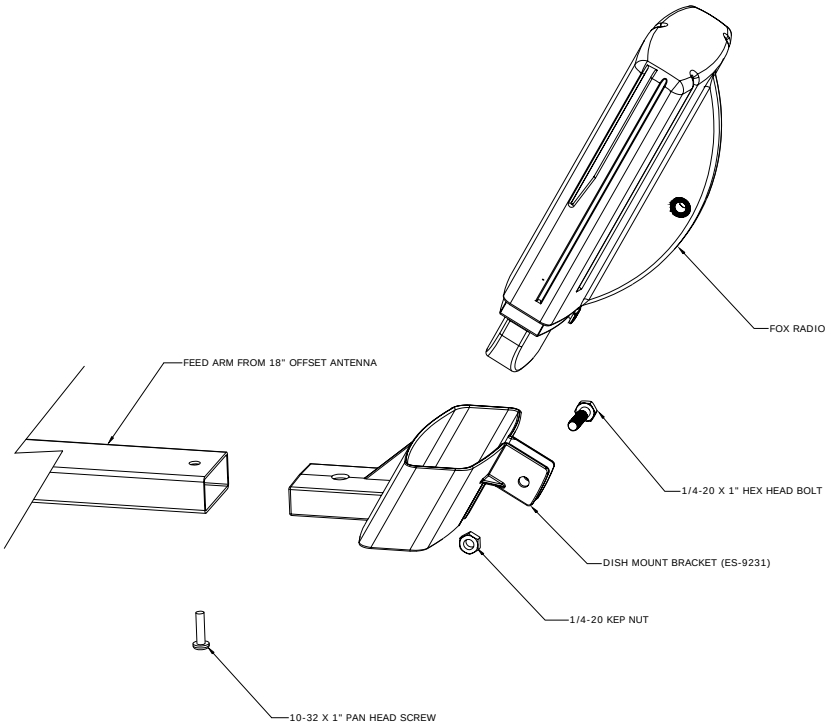

Figure 7-6: FOX5800-D with Mounting Cradle for DSS Dish Antenna

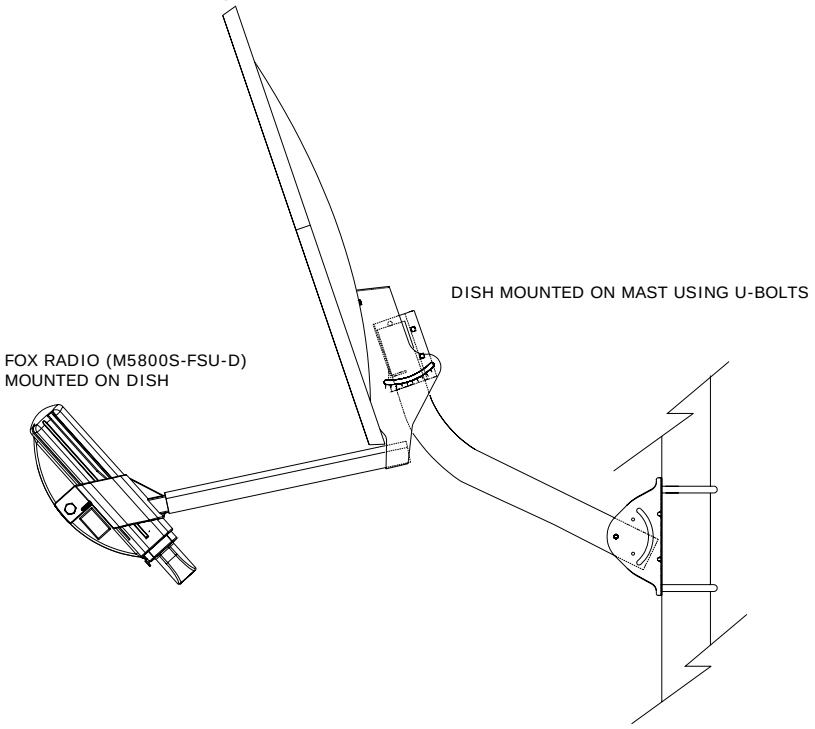

Figure 7-7: FOX5800-D / AD5800-25 Reflector Dish on Pole

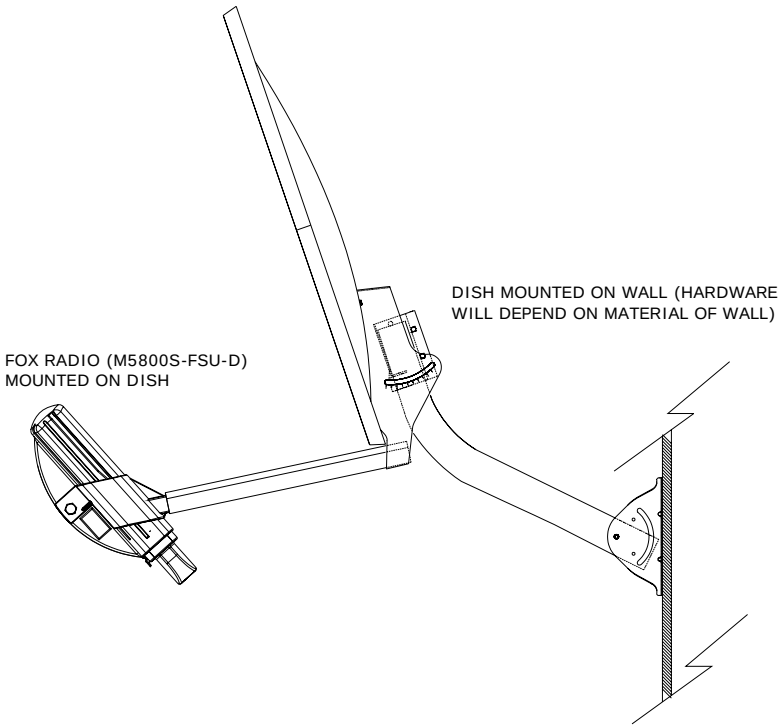

Figure 7-8: FOX5800-D / AD5800-25 Reflector Dish on Wall

Cabling and Grounding Considerations

Proper mounting of the radio includes consideration for grounding. Please note that if the radio is attached to a metal pole that is earth-grounded, no other grounding is necessary. If the radio is not earth-grounded via the mounting bracket, you must attach a grounding wire to the grounding stud on the back of the radio as in the adjacent diagram.

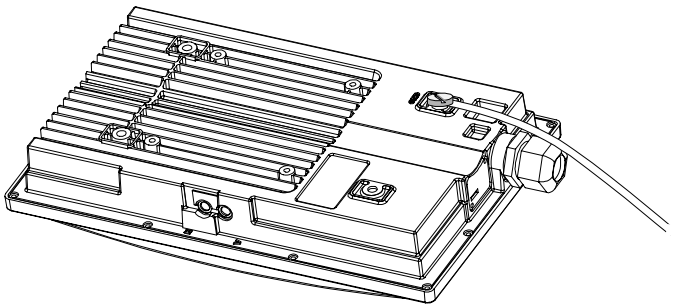

Figure 7-9: Grounding Example for M5830 Series

Shielded twisted pair Cat-5 cable is recommended for all installations.

It is important to provide strain relief and drip loop for the STP Cat-5 cables. Strain relief holes are provided on the FOX5800 and FOX5300 mounting bracket for use with cable tie. Create drip loop and strain relief as shown below.

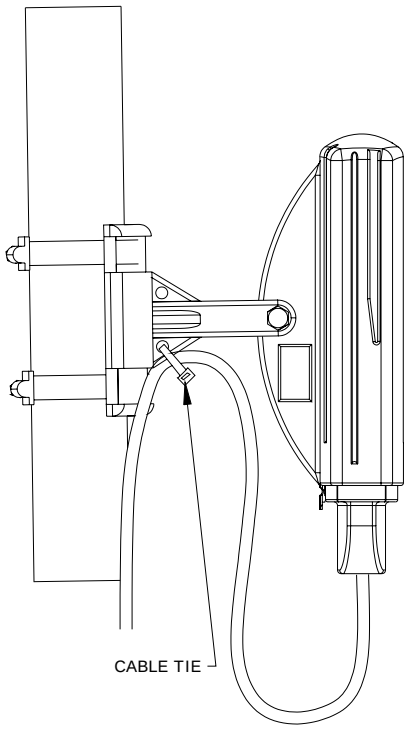

Figure 7-10: Cat-5 Cable Strain Relief

It is advised that the radio be grounded through the use of the shielded twisted pair's drain wires. Prior to crimping the STP Cat-5 cable, strip back approximately 18" of sheathing to expose the drain wires. Cut all wires except the drain wires and then crimp as normal. Ensure that the drain wires make contact with the RJ-45 metal housing. Twist together the individual drain wires and connect the other end to a known ground.

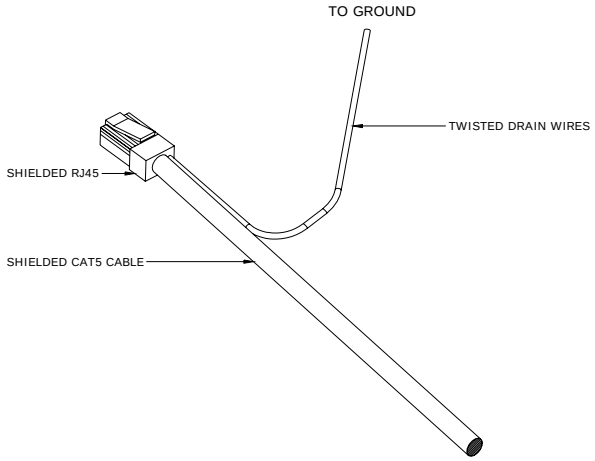

Figure 7-11: Grounding with Drain Wires of Shielded Twisted Pair Cat-5 Cable

Weatherizing

Important! If not using a conduit, the Ethernet port compression washer on the 5830 series radios should be loosely tightened around the cat-5 cable to allow pressure equalization within the radio's enclosure. Leave approximately 1 mm around the Cat-5.

It is important to provide strain relief and drip loop for the STP Cat-5 cables. Do not mount the radio upside down.

Important! The J-Box is not a weatherized device, and must be located either indoors or in a weather-protected cabinet.

Note: The shield within the Cat-5 cable does not need to be grounded if the radio itself is grounded. It is important to consider that most Cat-5 cable will deteriorate over time if exposed to the weather (especially direct sunlight). It is recommended that installers place all Cat-5 cables inside conduit. Plastic conduit is sufficient. If metal conduit is used, it is not necessary to use shielded Cat-5 cable.

Section 8 Deployment

Once you are familiar with the basic operation of the radios you are ready for deployment in the field. The deployment process consists of the following steps:

- Site Selection
- Site Survey
- Channel Planning
- SU Antenna Alignment
- Link Management Commands

Site Selection

Proper site selection for your AP will help ensure a successful deployment. Site selection will depend on a wide variety of factors, but from the radio's performance standpoint, please consider the following:

- Path from AP to SU should provide unobstructed line-of-sight, thus it is advisable to place the AP as high as possible on a tall building or tower.
- Ethernet cable limit is 330 feet from Ethernet device (router, switch) to the radio.
- Grounding of radios is recommended for optimal performance.
- AP provides sector coverage of 60° degrees azimuth and 10° degrees elevation
- Consider nearby sources of interference that could degrade the performance of the radio. Mount radio as far from sources of interference as possible.

✐ Note: See Appendix D – RF Primer for more information on site selection.

Site Survey

Both the AP and SU provide a powerful on-board site survey tool, which will tell you if interference is present in the 5.8 GHz or 5.3 GHz bands.

In order to use the survey command, the radio must be in Opmode "OFF." The survey can be performed for any specified amount of time (in seconds), and for either the horizontal or vertical polarization.

Prior to performing the site survey, place the radio in the installation spot, and aim the radio in the desired direction.

After the specified period, the results of this test will provide you with a listing of each channel in the band, the average signal received, and the maximum signal received during the survey period.

In general you will be looking for frequencies with signal strength of –85 dBm or lower. If interference is present on various channels, it is recommended that you chose clean channels, or alternate polarizations, for your deployment. If it is not possible to use a clean channel/polarization combination, there are various methods available to mitigate the affects of interference. These methods include the use of the RFRX THRESHOLD settings, or the use of external shields on the AP.

The survey can be run from either the browser or command line interface.

See Example on following page:

```
#> survey ism 30 h
Running site survey for 30 seconds.  Press any key to stop
```

Freq 5724 MHz peak -73 dBm max avg -91 dBm
Freq 5728 MHz peak -83 dBm max avg -94 dBm
Freq 5732 MHz peak -90 dBm max avg -96 dBm
Freq 5736 MHz Ch 1 peak -82 dBm max avg -94 dBm
Freq 5740 MHz peak -84 dBm max avg -94 dBm
Freq 5744 MHz peak -83 dBm max avg -94 dBm
Freq 5748 MHz peak -90 dBm max avg -96 dBm
Freq 5752 MHz peak -83 dBm max avg -94 dBm
Freq 5756 MHz Ch 2 peak -90 dBm max avg -96 dBm
Freq 5760 MHz peak -83 dBm max avg -94 dBm
Freq 5764 MHz peak -83 dBm max avg -94 dBm
Freq 5768 MHz peak -90 dBm max avg -96 dBm
Freq 5772 MHz peak -90 dBm max avg -96 dBm
Freq 5776 MHz Ch 3 peak -82 dBm max avg -94 dBm
Freq 5780 MHz peak -83 dBm max avg -94 dBm
Freq 5784 MHz peak -83 dBm max avg -94 dBm
Freq 5788 MHz peak -90 dBm max avg -96 dBm
Freq 5792 MHz peak -81 dBm max avg -93 dBm
Freq 5796 MHz Ch 4 peak -81 dBm max avg -93 dBm
Freq 5800 MHz peak -80 dBm max avg -93 dBm
Freq 5804 MHz peak -89 dBm max avg -96 dBm
Freq 5808 MHz peak -81 dBm max avg -93 dBm
Freq 5812 MHz peak -82 dBm max avg -94 dBm
Freq 5816 MHz Ch 5 peak -80 dBm max avg -93 dBm
Freq 5820 MHz peak -89 dBm max avg -96 dBm
Freq 5824 MHz peak -85 dBm max avg -94 dBm
Freq 5828 MHz peak -51 dBm max avg -56 dBm ****
Freq 5832 MHz peak -65 dBm max avg -89 dBm
Freq 5836 MHz Ch 6 peak -44 dBm max avg -50 dBm ****
Freq 5840 MHz peak -63 dBm max avg -88 dBm

In this example of a survey on horizontal polarization run from a FOX series subscriber unit for 30 seconds, the largest amount of interference is detected on channel 6.
The asterisks, ****, indicate the highest amounts of interference detected.

Once the site survey is completed, you are ready to install your radios. It is recommended that APs be installed first. The reason for this is that the SU has a built-in RSSI tool that will help you properly aim the SU at the AP to achieve maximum signal strength.

Channel Planning

For installations involving co-location of AP's, channel planning is of paramount importance. For maximum AP co-location quantities, it is important to assign frequencies of maximum spacing and alternating polarizations for adjacent APs. Use of the 5.3 spectrum UNII band as well as the 5.8 spectrum ISM band will allow maximum co-location potential. For very dense deployments of multiple APs, it may be necessary to use the optional AP Shielding kit in order to mitigate interference from nearby APs.

[Ch#01]5736 [Ch#02]5756 [Ch#03]5776 [Ch#04]5796 [Ch#05]5816 [Ch#06]5836
[Ch#07]5260 [Ch#08]5280 [Ch#09]5300 [Ch#10]5320 [Ch#11]5340 [Ch#12]5736
[Ch#13]5736 [Ch#14]5736 [Ch#15]5736 [Ch#16]5736 [Ch#17]5736 [Ch#18]5736
[Ch#19]5736 [Ch#20]5736 [Ch#21]5736 [Ch#22]5736 [Ch#23]5736 [Ch#24]5736
[Ch#25]5736 [Ch#26]5736 [Ch#27]5736 [Ch#28]5736 [Ch#29]5736 [Ch#30]5736

Figure 8-1 Default Channel Table (MHz)

Various AP channel plans can be implemented. Many of the factors will depend on the unique circumstances at each particular site. See http://www.trangobroadband.com/support/appnotes.htm for additional information on channel planning schemes.

AP Search and SU Antenna Alignment

Once the AP is installed and aligned in the correct general direction, it is time to install the SU. The hardware installation of the SU is similar to the AP, including considerations for line-of-sight, cable distances, cable type, weather sealing, and grounding.

Once the SU is installed and aimed in the general direction of the AP, it is time to perform an RSSI (relative signal strength indicator) test to determine the signal strength from the AP, and to precisely align the SU antenna for maximum signal strength.

Although it is possible to rely upon the subscriber unit's LEDs for alignment, more precise RSSI readings are available from the command line interface ***ssrssi*** command.

In conjunction with the ***ssrssi*** command, it is also useful to perform the ***apsearch*** command that will tell you which AP is providing an adequate signal at the location of the SU.

AP Search

1. Ensure AP is in Opmode "AP."
2. Run the ***apsearch*** command to verify which AP is providing the strongest signal strength.

Example:

```
#> apsearch

Ch 1 5736 MHz h peak -96 dBm avg -99 dBm
        v peak -97 dBm avg -99 dBm
Ch 2 5756 MHz h peak -97 dBm avg -99 dBm
        v peak -97 dBm avg -99 dBm
Ch 3 5776 MHz h peak -97 dBm avg -99 dBm
        v peak -97 dBm avg -99 dBm
Ch 4 5796 MHz h peak -97 dBm avg -99 dBm
        v peak -97 dBm avg -99 dBm
Ch 5 5816 MHz h peak -97 dBm avg -99 dBm
        v peak -97 dBm avg -99 dBm
Ch 6 5836 MHz h peak -44 dBm avg -45 dBm  B11 A 1  peak -44 dBm avg -45 dBm rx 1545 pkts
       v peak -58 dBm avg -99 dBm
#>
```

In this example, the only significant energy is on channel 6 with horizontal polarization. Further, the Base ID is 11, and the AP ID is 1. There is significant energy on channel 6, polarization vertical. However, this SU is set to horizontal polarization and will ignore that energy.

***ssrssi* Command for Antenna Alignment**

Telnet into the SU (while in Opmode "OFF") or access the radio via HyperTerminal/serial port. Type the command ***ssrssi <channel> <polarization>***.

The telnet session screen will begin a continuous readout of the received signal strength. As you read the RSSI reading, move the antenna in the horizontal and vertical planes until the maximum RSSI reading is achieved. For short links you can expect an RSSI of –60 dBm or better. For longer links an RSSI of –75 dBm is acceptable. Any RSSI of less than –80 dBm is likely too weak for the radios to reliably associate and pass data.

Examples:

```
#> ssrssi 2 v

Press [space] then [enter] to stop

AP  ?  -97 dBm
AP  ?  -97 dBm
AP  ?  -97 dBm
#>

#> ssrssi 6 v
Press [space] then [enter] to stop
AP  ?  -58 dBm
AP  ?  -58 dBm
AP  ?  -58 dBm
#>

#> ssrssi 6 h
```

ssrssi 2 v — In this example very little energy was detected, although the AP was in Opmode "AP," since the wrong frequency and polarization were used.

ssrssi 6 v — In this example the correct channel was used, but the wrong polarization, so a significant amount of energy was detected, the AP cannot be discerned because the SU is looking for energy on a particular frequency and polarization.

ssrssi 6 h — Here, the correct channel and polarization show the most energy, and the SU is able to discern the AP ID.

```
Press [space] then [enter] to stop
AP 11  -44 dBm
AP 11  -46 dBm
AP 11  -47 dBm
#>
```

If it is not possible to receive an adequate RSSI reading, it may be necessary to reorient the AP (up/down, left/right), increase the output power of the AP, or move the SU to a location with better line-of-sight conditions to the AP.

Once you are satisfied with the RSSI reading, tighten down the SU in the optimum position. To stop the RSSI continuous readout, hit SPACE ENTER.

SU Alignment Using LEDs

The LED RSSI indicators on the bottom of the radio provide a handy alignment tool. If all four LEDs are lit (on FOX Series Subscriber Units), the unit is receiving –60 dBm or stronger. If no LEDs are lit, there is not sufficient signal strength to establish a wireless link.

Lit LEDs	Signal Strength
0 LED	-80 dBm
1 LED	-75 dBm
2 LED	-70 dBm
3 LED	-65 dBm
4 LED	-60 dBm

On an M5830 Series Subscriber Unit, the single amber light on the bottom of the SU will also indicate RSSI according to the following parameters:

RSSI ≤ -80dBm	not lit
RSSI > -80dBm	blinking (blink rate increases with signal strength)
RSSI ≥ -65dBm	solid

Link Management Commands

Once the radios are properly aligned for maximum RSSI, ensure the SU's default Opmode is "SU" and that all configuration parameters are correct.

Reboot the SU. Once the SU enters Opmode "SU," the authentication process will begin and the two radios will begin to associate. From the AP side there are several basic diagnostics commands, such as ***su ping***, ***su status***, and ***su testrflink***, to ensure that a reliable RF link has been established. It may take one minute or more for the association process to complete. This process may take longer if there are many SUs in that sector.

If all tests show favorable results, the wireless link will automatically begin passing Ethernet traffic between the radios.

In establishing and diagnosing the quality of the link between the AP and SU(s), there are a few commands that are especially useful. All of these commands are performed at the AP. A summary of these commands follows:

su
Displays the status of all SUs in the AP's SUDB. SUs in the SUDB will appear by SU ID, and will be classified into one of the following status categories: Associated, Associating, and OFF.

su live
Displays a list of SUs that are currently associating with the AP (by SU ID).
Example:

#> su live
---------- Live ----------
88
--> 1 SU

Success.

Note: In this and the following examples, the SU ID is 88.

su ping <su#>
The AP will send 10 RF pings to the designated SU ID. The response from each ping will indicate latency (in micro-seconds) and the strength (RSSI) of the signal received back from the SU for each of the 10 pings. Note that this command will also tell you the distance from the AP to the SU.
Example:
#> su ping 88
[#Begin]
[0088]
Ping #0 -> 292 us [-43 dB]
Ping #1 -> 288 us [-43 dB]
Ping #2 -> 286 us [-43 dB]
Ping #3 -> 287 us [-43 dB]
Ping #4 -> 287 us [-43 dB]
Ping #5 -> 287 us [-43 dB]
Ping #6 -> 287 us [-43 dB]
Ping #7 -> 287 us [-43 dB]
Ping #8 -> 290 us [-43 dB]
Ping #9 -> 288 us [-43 dB]
suid 88: range[avg/min/max 288/286/292 us] max rssi[-43 dBm] distance[0.1 mi]
[#End]
Success.

su status <su #>
The AP will poll the SU for that SU's current status, and will provide information such as SU range from AP, signal strength received at SU from AP, SU temperature, etc...
Example:
#> su status 88
[#Begin]
[suid] 88

[tm] 10566282	The up time in milliseconds
[rf rx] 40 Kbits/s	Wireless received kilobits/second
[rf tx] 0 Kbits/s	Wireless transmitted kilobits/second
[eth rx] 0 Kbits/s	Wired received kilobits/second
[eth tx] 40 Kbits/s	Wired transmitted kilobits/second
[rssi] -46	Signal strength in dBm at the SU
[tx power] -8	Transmit power at the SU
[temp] 42	Temperature of the SU in Celsius.

[#End]
Success.

rssi
This command can only be executed from the SU while in Opmode "SU."
#> rssi

[1] peak -44 dBm avg -45 dBm ****
[2] peak -44 dBm avg -45 dBm ****
[3] peak -44 dBm avg -45 dBm ****
[4] peak -44 dBm avg -45 dBm ****
[5] peak -44 dBm avg -44 dBm ****
[6] peak -44 dBm avg -50 dBm ****

linktest <su#>
This command checks the integrity of the wireless link from the standpoint of performance. The AP will send 500 large packets to the SU, and the SU will return what it receives to the AP. Small numbers of errors are inconsequential. Look first for an average throughput above 9000 kilobits per second (kbps). A perfect link (without dropped packets) will yield average throughput over 10,000 kbps. If heavy packet loss occurs it may be caused by interference or multi-path.

Example:
#> linktest 88

[suid] 88 [pkt len] 1600 bytes [# of pkts per cycle] 500 [cycle] 10

0 [AP Tx]500 [AP Rx]500 [AP RxErr]0 [SU Tx]500 [SU Rx]500 [SU RxErr]0
1277ms 10023 kbps
1 [AP Tx]500 [AP Rx]500 [AP RxErr]0 [SU Tx]500 [SU Rx]500 [SU RxErr]0
1278 ms 10015 kbps
.
.
9 [AP Tx]500 [AP Rx]500 [AP RxErr]0 [SU Tx]500 [SU Rx]500 [SU RxErr]0
1277 ms 10023 kbps

[AP Total nTx] 5000 pkts
[AP Total nRx] 5000 pkts
[AP Total nRxErr] 0 pkts

[SU Total nTx] 5000 pkts
[SU Total nRx] 5000 pkts
[SU Total nRxErr] 0 pkts

[AP to SU Error Rate] 0.00 %
[SU to AP Error Rate] 0.00 %

[Avg of Throughput] 10017 kbps

su testrflink <su#>
This command also checks the integrity of the wireless link from the standpoint of packet loss. Similar to the ***linktest*** command, however this test does not provide as much detail. In this test, the AP will send 20 large packets to the SU, and the SU will in turn send the same 20 packets back to the AP. The expected result of an error free link is 20..20..20, indicating (in the following sequence) 20 packets sent from AP, 20 packets received back at AP, and 20 packets received at SU. Any results other than 20..20..20 indicate lost packets, and are most likely due to interference or an inadequate signal to noise ratio.

The "r" is used to repeat the RF link test repeatedly, until the user terminates the test by hitting SPACE ENTER.
#> su testrflink 8000 r

Press [space] then [enter] to stop
[len] 1512
[suid] 8000
[0] .....[AP Tx] 20 [AP Rx] 20 [SU Rx] 20
[1] .....[AP Tx] 20 [AP Rx] 20 [SU Rx] 20
[2] .....[AP Tx] 20 [AP Rx] 20 [SU Rx] 20
[3] .....[AP Tx] 20 [AP Rx] 20 [SU Rx] 20
[4] .....[AP Tx] 20 [AP Rx] 20 [SU Rx] 20
[5] .....[AP Tx] 20 [AP Rx] 20 [SU Rx] 20

Success.
#>
As another example, a result of 20..10..18 would indicate 20 packets sent from AP, 18 packets received at SU, and 10 packets received back at the AP. For thorough results it is recommended you run the command repeatedly for at least 1 minute or more to determine if packets are passing without error consistently over time.

Section 9 Management

This section covers the following topics:

- SU Management from AP
- TCP/IP SU Management
- Security
- SNMP

SU Management from AP

Network management can be performed by the following methods

- HTTP Interface
- CLI See Appendix B -- Command Set Reference
- SNMP Manager

The AP provides functionality and several commands that permit the management of associated SUs. In fact, most system management functions for the SU can be performed by issuing commands from the AP. Presented below are a few examples of these commands:

su <ping | info | status> <suid>

su powerleveling <all | suid>

su ipconfig <suid> <new IP> <new subnet> <new gateway>

su reboot <all | suid>

su restart <all | suid>

su testrflink <all | suid> [<r>]

su testrflink aptx [<pkt, 20..100>]

su sw <suid> <sw #> <on | off>

Note: SU commands issued from the AP will automatically update the SU's flash memory. No ***save ss*** command is necessary.

As an example, you can change SUs password for a single SU or all the SUs in a sector: ***su password <all|suid> <pwd> <pwd>***
Type the following:
Example: su password 7 hello hello (to remotely change the password on SU#7 to "hello")

As another example, to change the SUs IP, subnet, and gateway: ***su ipconfig <suid> <new ip> <new subnet> <new gateway>***
Type the following:
#>su ipconfig 7 192.168.10.10 255.255.255.0 192.168.10.1

In this example SU ID #7's IP address is changed to 192.168.10.10, the subnet mask is changed to 255.255.255.0, and the gateway is changed to 192.168.10.1.

In addition to the SU commands, a couple of "broadcast" commands are also provided that will broadcast parameters to all associated SUs in a sector.

As an example, to broadcast a new channel/scan table to one or all SUs: ***bcastscant <all | suid> <ch #> <h | v>…***

#>bcastscant all 5 v 2 h

In this example, the AP will transmit a new channel scan table (channel 5 vertical, 2 horizontal) to all associated SUs. This command will broadcast the table every second for 60 minutes. To stop the broadcast sooner, type the command ***bcastscant stop***.

A complete description of these commands and many others can be found in Appendix B -- Command Set Summary.

TCP/IP SU Management

As noted in the "Getting Started" section, it is possible to use the telnet and HTTP interface to manage the SU from the AP side of the wireless connection as long as switch #2 (TCP/IP for AP switch) is turned on at the SU. To turn on switch 2 (while logged into the AP) use the following command:

su sw <su-id | all> 2 on

Example: su sw 2 all on (to turn on switch 2 for all associated SUs)

Note: Switch 2 default from factory is on.

Loading Multiple SUs into SUDB using DLOAD Command

To load a full database of SU entries into the AP SUDB, you need to create a SUDB in ASCII text file format. As shown below, each row represents all information for one SU. Each column is an information field, which includes: SU ID, SU to SU group, service level, CIR, MIR, and MAC address.

```
0001 0001 3000 9999 0001 de01 0203 --- Subscriber 1
…
0003 0011 5000 9999 0001 de04 0506
0004 0011 0512 9999 0001 de01 0203 --- Subscriber 4
0000 0000 0000 0000 0000 0000 0000 --- End of file indicator
---- ---- ---- ---- --------------
 |   ||  |   |       |
 |   ||  |   |       |---------- MAC Address
 |   ||  |   |--------------------- MIR (Kbps)
 |   ||  |-------------------------- CIR (Kbps)
 |   ||------------------------------ Service level
 |   |                        (5: priority user)
 |   |                        (1: regular user)
 |   |------------------------------- Peer-to-peer group #
 |   |                        (1 to F in hex)
 |------------------------------------ SU ID (1~8192)
```

1. ***telnet*** into the AP, run command ***tftpd*** on to enable tftp process
2. ***tftp*** the file to the AP from your DOS prompt example: tftp <IP of AP> put mySUs.txt
3. ***telnet*** into the AP
4. Run command ***sudb dload*** to load and activate the database
5. Run command sudb ***view*** to verify the database entries

Run command ***updateflash sudb*** to write the database to non-volatile memory.

Managing AP from SU side of Network

The Access5830 was designed to prevent users on the SU side of the network from accessing the AP via telnet or HTTP interface. If it is necessary for network administrators to access an AP from the SU side of the network the user must first telnet into a router, or similar device, located behind the AP, then telnet from the router into the AP.

SNMP

The Access5830 supports Simple Network Management Protocol (SNMP) for network management. Network management consists of the following 4 categories: configuration, accounting, alarm, and monitoring and control. These capabilities allow the network operator to provide superior services through higher network accessibility and integrated accounting systems. For more information on SNMP and its uses, you can visit http://www.faqs.org/faqs/snmp-faq/.

The Trango SNMP solution supports MIB-II (system only) and the Trango proprietary Management Information Base (MIB). The SNMP agent resides on the AP ONLY. It gathers health, status, and performance statistics from all SUs locally, then responds back to the SNMP manager upon request.

Users interested in using the SNMP functionality should review the entire Access5830 MIB for a complete understanding of its features.

The following is an overview of a few of the more commonly used SNMP objects in the Access5830 system.

Objects for Monitoring and Control

SU Bandwidth Monitoring

- **suEthRXAvgThroughputLog** – Average payload data throughput (in Kbits/sec) received on the Ethernet port over the period specified by suStatisticsSamplePeriod (1 ~ 60 minutes).
- **suEthTXAvgThroughputLog -** Average payload data throughput (in Kbits/sec) transmitted on the Ethernet port over the period specified by suStatisticsSamplePeriod (1 ~ 60 minutes).
- **suRFRXAvgThroughputLog -** Average payload data throughput (in Kbits/sec) received on the RF link over the period specified by suStatisticsSamplePeriod (1 ~ 60 minutes).
- **suRFTXAvgThroughputLog -** Average payload data throughput (in Kbits/sec) transmitted on the RF link over the period specified by suStatisticsSamplePeriod (1 ~ 60 minutes).
- **suRfInOctets** – Number of octets of payload transmitted from AP's RF port.
- **suRfOutOctets** – Number of octets of payload received on AP's RF port.

AP Bandwidth Monitoring

- **aptrafficEthRXAvgThroughputLog** – Average payload data throughput (in Kbits/sec) received on the Ethernet port over the period of 1 minute.
- **aptrafficEthTXAvgThroughputLog** – Average payload data throughput (in Kbits/sec) transmitted on the Ethernet port over a period of 1 minute.
- **aptrafficRFRXAvgThroughputLog** – Average payload data throughput (in Kbits/sec) received on the RF link over a period of 1 minute.
- **aptrafficRFTXAvgThroughputLog** – Average payload data throughput (in Kbits/sec) transmitted on the RF link over the period of 1 minute.
- **aptrafficEthInOctets** – Number of octets of payload received on the Ethernet port.
- **aptrafficEthOutOctets** – Number of octets of payload transmitted on the Ethernet port.
- **aptrafficRfInOctets** – Number of octets of payload received on the RF port.
- **aptrafficRfOutOctets** – Number of octets of payload transmitted on the RF port.

Link Status Monitoring –Various traps are defined as follows:

- Cold start – when SNMP agent starts running
- Link Up – when the AP enters Opmode "AP"
- Link Down – when the AP reboots
- SU Link Up – when SU associates to the AP
- SU Link Down – when SU disassociates from the AP
- "AP" Opmode Failure – when AP fails to enter Opmode "AP"

AP and SU Control – SNMP also provides several control capabilities. The majority of the features available on the CLI are also available via SNMP. Here are a few of these features:

- Add/delete subscriber
- Change channel
- Set power
- Set radio sensitivity

Review the Trango MIB (trango_m5830sap_1p0.mib) for the complete listing of MIB Objects.

SNMP Setup

Trango Broadband provides only the MIB portion of the SNMP Management system. The radios act as individual agents. It is up to the user to provide an SNMP Manager software from a third party vendor. Below is an example of the setup process for SNMPc from Castle Rock™.

1. Unzip trangopkg.zip file to a local temporary directory.
2. Go to your local temporary directory. There you will see the 4 files shown below.
    a. trango_m5830sap_1p0.mib – M5830S AP MIB file
    b. trango.ico – M5830S AP icon
    c. autoico.txt – instruction file (Selects Trango icon automatically during initial set-up.)
3. Copy trango_m5830sap_1p0.mib file to C:\Program Files\SNMPc Network Manager\mibfiles
4. Copy autoico.txt file to C:\Program Files\SNMPc Network Manager\mibfiles

5. Copy trango.ico file to C:\Program Files\SNMPc Network Manager\bitmaps.
6. The MIB needs to be compiled into the SNMPc database.

By default, the Read Community is set to "**public**" and the Write Community is set to "**private**" in the AP. The Trap Community is "**SNMP_trap**." The manager needs to have the same settings in order to communicate with the AP successfully.

To send traps from the AP, set the following:

- trap destination IP (Trango MIB object trapconfig–trapconfigInfo)
- trap community string (Trango MIB object trapconfig–aptrpTable-AptrpEntry)
- enable each trap (Trango MIB object traponfig–aptrpTable-AptrpEntry)

For all the set operations, set object SaveAndActivate at apsystem-apsystemInfo to write the information to FLASH.

Appendix A HTTP Browser Interface

Below are screen shots of most of the browser pages that manage the Access5830 system. The pages originate from the radio itself, so no additional software is needed on the managing PC other than a web browser. A Web Browser on a computer with an Ethernet connection to the radio and the IP address of the radio are all that are required.

No more than one user can have an HTTP session with a given radio at one time. The log out timer is set to five minutes.

Most pages are similar for Access Points and Subscriber Units. When there are significant differences both are included in this text. With each page there is a brief description of the major features. For more discussion on any feature see Appendix B -- Command Set Reference, or click the Help hyperlink.

Login Page: Although there are hot links on the left column of the page, you must first type in the password and press Enter.

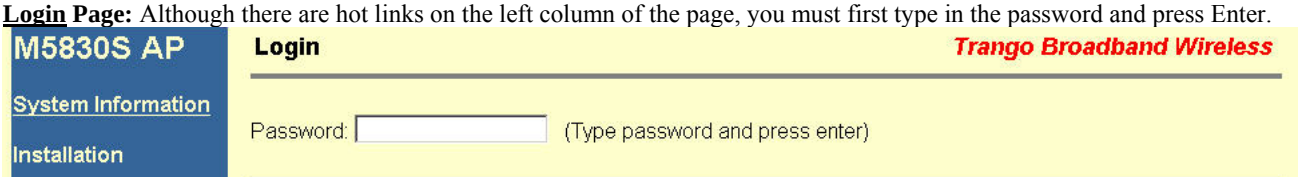

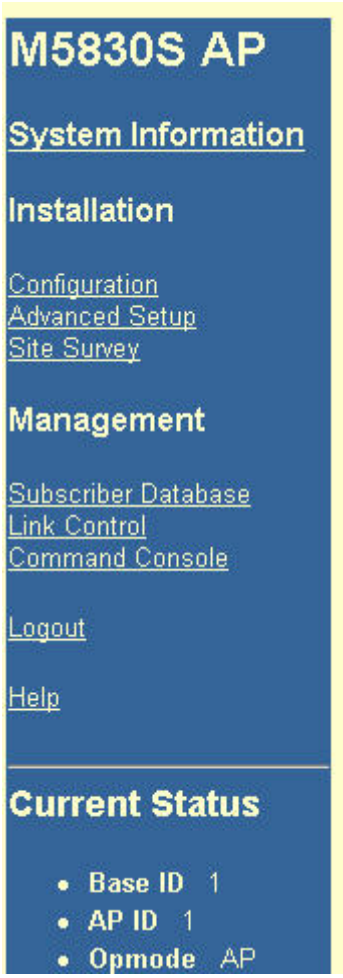

Navigation Column: This is that blue rectangular column on the left, which is shown on all pages. On the top is the model number of the radio to which you are connected. On the bottom of the Navigation column is the Current Status of the radio including its Base ID, AP ID, and current Opmode. In addition there are the following links, which are dealt with separately below, available in the Navigation column:

System Information Page: This page shows most of the basic configuration parameters of the radio. It is the first page shown after login.

Configuration Page: The essential parameters, such as Base ID, channel, and polarization, are set here.

Advanced Setup Page: The advanced RF parameters, such as Transmit Power, are set here.

Site Survey Page: From here, in Opmode "OFF," the user can conduct a spectrum analysis.

Subscriber Database Page: This is the page for defining which SUs can associate to the AP.

Link Control Page: Determine which SUs are connected, and how they are performing, with this page.

Command Console Page: Runs any console command that is not interactive (i.e. ***ipconfig***). It reports the results back via the HTTP screen. For a complete list of console commands, type "help" in the entry field.

Logout Link: This will end the current HTTP session with the radio.

Help Page: A brief help page describes all items on all pages.

System Information

Hardware Version 8002
FPGA Version 02103000 **Checksum** 7ADD5AB6
Firmware Version AP 1p11H8002D03100301 **Checksum** EF3391FF
Device ID 00 01 DE 00 27 4F
Base ID 1 **AP ID** 1
Opmode AP **Default Opmode** AP
System Up Time 0 day(s) 01:29:30 **Radio Temperature** 44 C
IP 10.10.50.5 **Subnet Mask** 255.255.255.0 **Gateway** 10.10.50.101
Telnetd Port 23 listen
Tftpd disabled
MIR Threshold disabled
Active Channel 1 v **Rx Threshold** -90 dBm **Tx Power** -6 dBm
Channel Table (MHz)
Ch#01 5736 **Ch#02** 5756 **Ch#03** 5776 **Ch#04** 5796 **Ch#05** 5816 **Ch#06** 5836
Ch#07 5260 **Ch#08** 5280 **Ch#09** 5300 **Ch#10** 5320 **Ch#11** 5340 **Ch#12** 5736
Ch#13 5736 **Ch#14** 5736 **Ch#15** 5736 **Ch#16** 5736 **Ch#17** 5736 **Ch#18** 5736
Ch#19 5736 **Ch#20** 5736 **Ch#21** 5736 **Ch#22** 5736 **Ch#23** 5736 **Ch#24** 5736
Ch#25 5736 **Ch#26** 5736 **Ch#27** 5736 **Ch#28** 5736 **Ch#29** 5736 **Ch#30** 5736
Broadcast Packet pass
SU to SU Communication disabled
Broadcast Time Stamp to SU disabled
Remarks alcatraz

Hardware Version: Hardware version is factory-set and cannot be changed by user.

FPGA Version: Low-level firmware currently loaded on the radio.

Firmware Version: Primary firmware. Normally this is the only firmware that needs to be upgraded. The version part of the string is 1p11, the hardware is H8002, and the rest is a date code.

Device ID: MAC address of the radio.

Base ID: Specifies the cell or cluster to which the AP belongs. Base ID is one of three key pieces of information, along with active channel and subscriber database information, for the establishment of a link between the AP and SUs.

AP ID: Informational parameter used to provide an unique number for each AP. It is useful for AP sector planning. Please note that AP ID is not used by the system for SU authentication.

Opmode: Current operation mode of the radio. "ON" indicates transmitting. "OFF" indicates not transmitting.

Default Opmode: Is the Opmode the radio will enter after waiting for the period of time determined by the Default Opmode parameter. This is provided no attempt to connect via serial port or Telnet is made.

IP,Subnet Mask, & Gateway: The IP address of the AP for use in Telnet, HTTP, SNMP, and TFTP. It is not essential to pass traffic.

Telnetd Port: User changeable telnet port of radio.

Tftpd: Current status of TFTP daemon. Used for uploading firmware.

MIR Threshold: Enable/Disable the Maximum Information Rate (MIR) Threshold. Used in bandwidth throttling.

Active Channel: The channel currently being used by the AP.

RX Threshold: Sets the receive threshold of the AP. The AP will not process signals received below this level, so it is very useful for interference mitigation. For a smaller radius of operation, use a higher threshold (-65 is higher than -70).

TX Power: Sets the conducted RF power output of the radio. This does not include antenna gain. A higher number is more powerful.

Channel Table: Lists each of the assigned frequencies to each channel. Note that the default channels 1 – 6 are assigned to the ISM band and channels 7 – 11 are assigned to the UNII band. All channels may be re-assigned as desired by the user.

Broadcast Packet: This software switch (0) enables/disables the blocking of Ethernet control packets, except ICMP and ARP, to reduce the amount of unnecessary overhead introduced to the wireless link.

SU to SU Communication: Allows SUs with the same group # to communicate directly with each other through the AP. SUs using SU to SU communication must be on the same subnet!

Remarks: User definable radio information (i.e. customer name, address of installation, and so on). A maximum of 28 characters can be stored.

AP Configuration

Note: Some of the parameters below will be unavailable (grayed out) if the radio is in Opmode "AP." Remember to Save and Activate Settings.

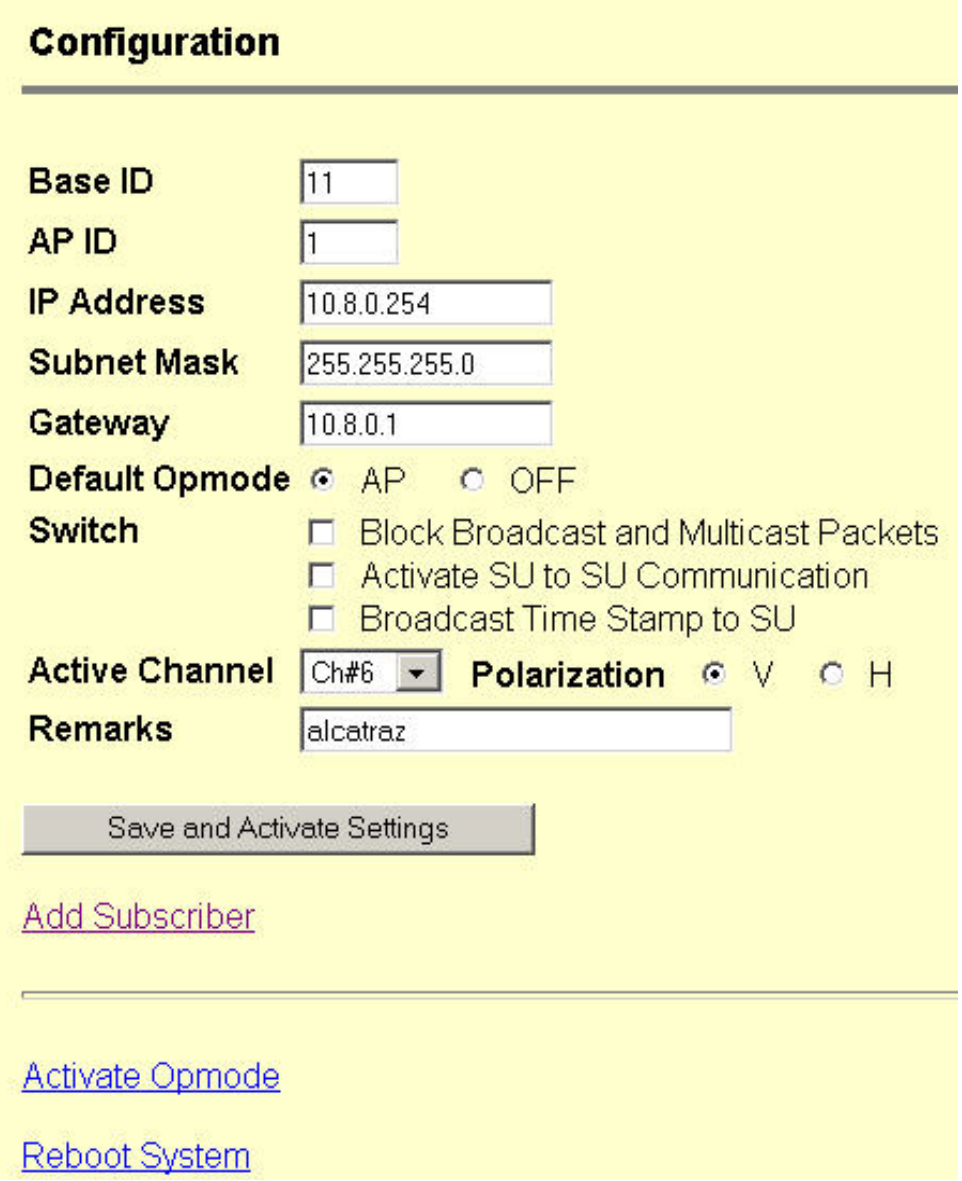

Base ID: Arbitrary integer 1-127. All SUs that wish to communicate with the Base station must have same Base ID loaded into their memory. It can only be changed while in Opmode "OFF."

AP ID: Arbitrary integer 1-255. For identifying APs within a single Base station. It can only be changed while in Opmode "OFF."

IP Address: The IP address of the AP for use in Telnet, HTTP, SNMP, and TFTP.

Default Opmode: Is the Opmode, after a reboot or power cycle, that the radio will enter after the period of time determined by the Default Opmode parameter. Provided that no attempt to connect via serial port or Telnet is made.

Switches: Checked means active.

Block Broadcast and multicast packets: Block these types of Ethernet packets when active. ARP packet will be passed.

Activate SU to SU communication: Allows SUs in matching groups (except group 0) to communicate with each other via the AP. See the Subscriber Database section for more information.

Broadcast time stamp to SU: Sends a copy of the real time clock to the SU every 60 seconds. May be used for tracking statistics when using SNMP.

Active Channel/Polarization: The current channel and antenna polarization being used in the sector when Opmode is "AP." SUs in this sector must have these values loaded in their AP Scan sequence.

Remarks: A text field available for system administrator's general use. Does not affect system performance.

Save and Activate Settings: Saves the variables to FLASH memory and activates setting.

Add Subscriber: Links to Subscriber Database page to enter new subscriber.

Activate Opmode: Turns Opmode to "AP," to turn the Opmode to "OFF," see Default Opmode.

Reboot System: Reboots the system. Make sure all settings have been saved first.

SU Configuration

Note: Some of the parameters below will be unavailable (grayed out) if the radio is in Opmode "SU." Remember to Save and Activate Settings.

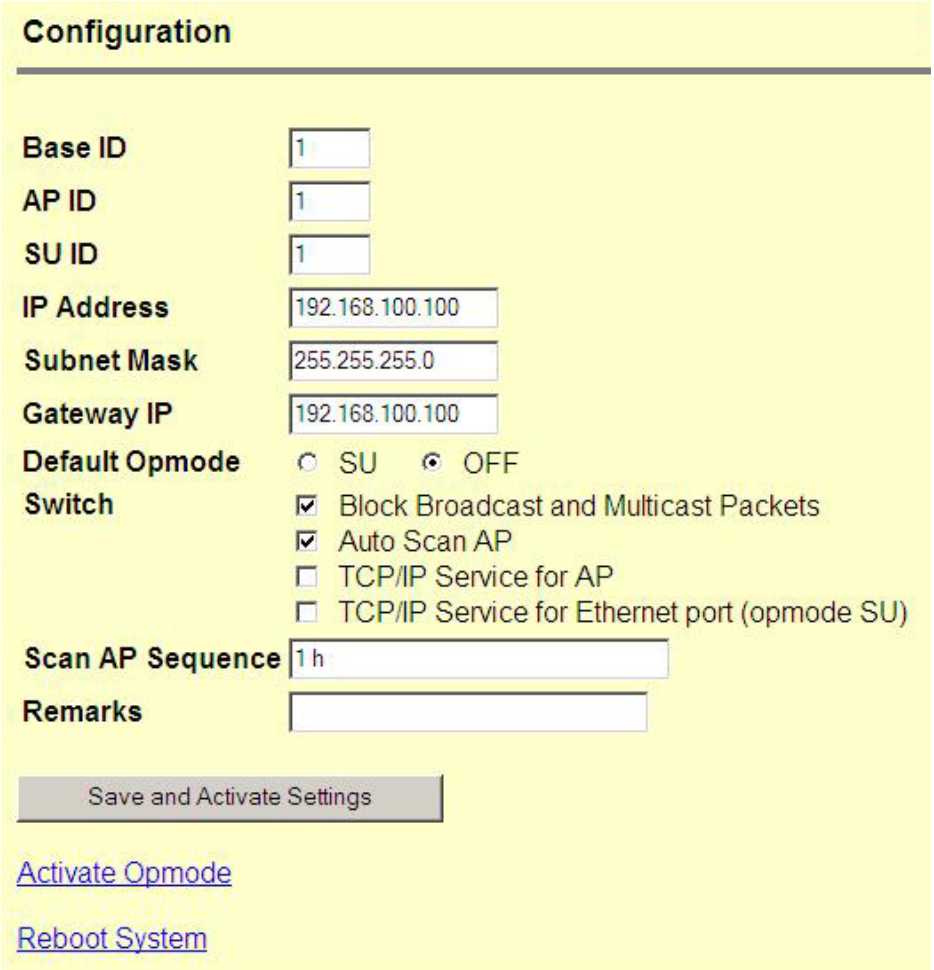

Base ID: User definable base station ID (1-127). Typically assigned to a group of APs at a particular cell site. The Base ID in the AP must match the Base ID in SU in order for a link to be established.

AP ID: User definable AP ID (1-255). This parameter is for informational purposes only and does not play a role in the establishment of a link.

SU ID: This parameter is used to uniquely identify the SU within a particular sector. The range is 1-8190. The SUID, along with its priority type, SU to SU group (if active), CIR, MIR, and device ID must be in the AP's SUDB before a link with the AP is established. Can only be changed while in Opmode "OFF."

IP Address, Subnet Mask and Gateway: The IP Address, Subnet Mask, and Gateway of the radio for configuration and network management purposes. Since this is a layer-II device, these parameters do not play a role in the establishment of a wireless link.

Default Opmode: Operation mode of the radio after power cycle or reboot. When the radio enters Opmode "SU," it will be transmitting. When the radio enters Opmode "OFF," the radio is not transmitting, but can be accessible via the Ethernet port. The radio can be put into Opmode "OFF" regardless of its default Opmode by accessing the radio via Telnet or HTTP within the first 30 seconds after power cycle or reboot.

Switches: Checked means active.

Block Broadcast and multicast packets: Block these types of Ethernet packets when active. ARP and DHCP packets will be passed regardless of this setting.

Auto Scan AP: Will scan all channels and polarization in search of an AP.

TCP/IP Service for AP: Allows TCP/IP access into the SU via the RF link when the SU is in Opmode "SU."

TCP/IP Service for Ethernet port (Opmode "SU"): Allows TCP/IP access into the SU via the Ethernet port when the SU is in Opmode "SU."

Scan AP Sequence: The set of channels and antenna polarizations the SU will automatically scan while it searches for an AP.

Remarks: A descriptive text field for general use (i.e. the location of the unit). It does not affect system performance.

Save and Activate Settings: Saves to memory any settings that were altered. These settings are then activated. Note: All changed settings will revert to previous values after reboot/power cycle if Save and Activate is not selected.

Activate Opmode: Activates radio's Opmode to "SU," which means it is transmitting. To turn a radio to Opmode "OFF," see Default Opmode.

Reboot System: Reboots the system. Make sure all settings have been saved first.

AP Advanced Setup Page

Note: The Advanced Setup page is divided into three sections: ISM, U-NII, and Channel Table. There is a different range for parameters in ISM and U-NII bands. Remember to Save and Activate Settings.

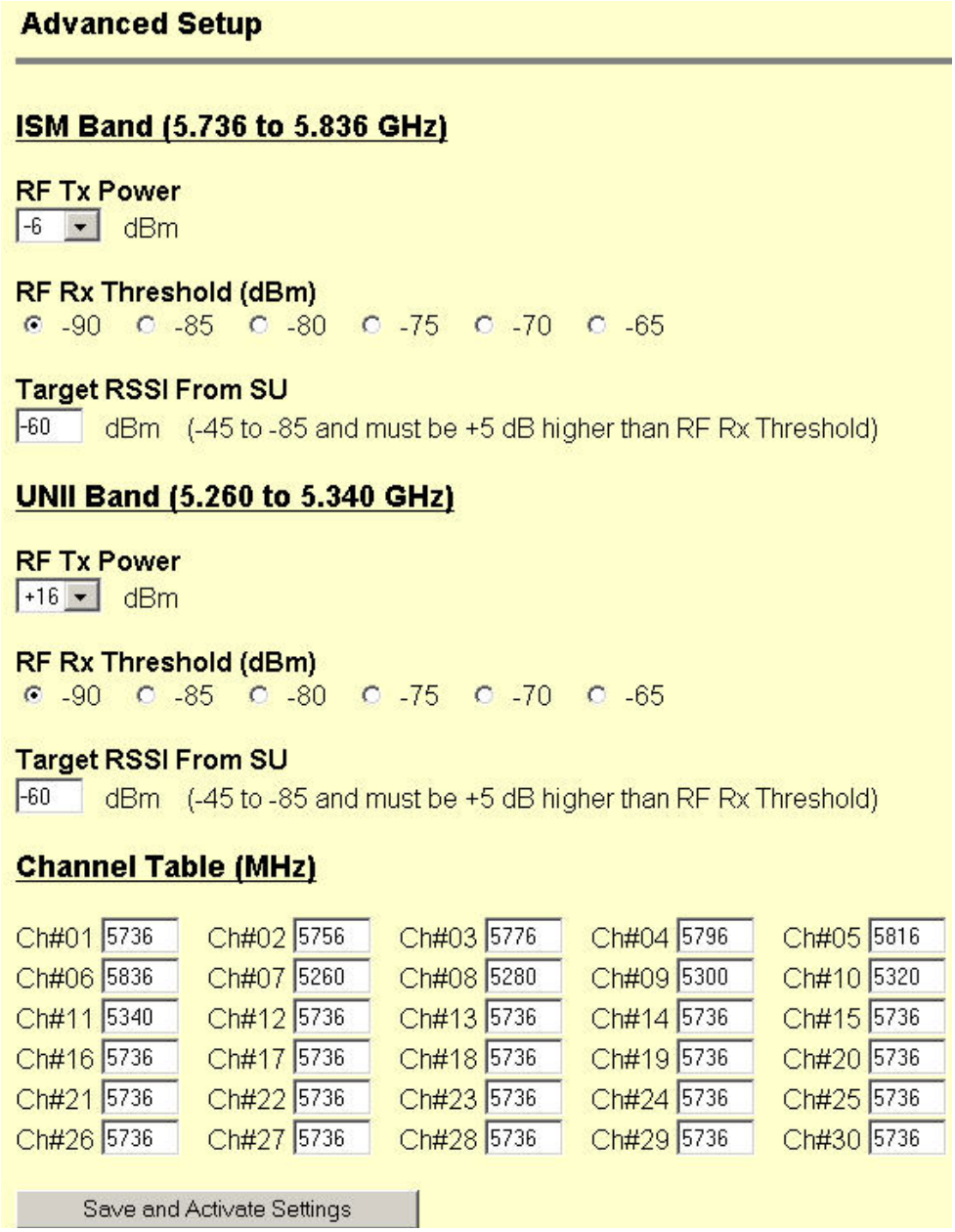

RF TX Power: Sets the conducted RF power output of the radio. This does not include antenna gain. A higher number is more powerful.

RF RX Threshold: Sets the receive threshold of the AP. The AP will not process signals received below this level, so it is very useful for interference mitigation. For a smaller radius of operation use a higher threshold (-65 is higher than -70).

Target RSSI from SU: Used to adjust the RF power level of the SUs so they all have roughly the same level at the AP. Make sure that all SUs are power leveled after changing this number (See Link Control page).

Channel Table: Assigns channel numbers to actual frequencies of operation. Default settings allow the largest number of channels.

AP Subscriber Database Page

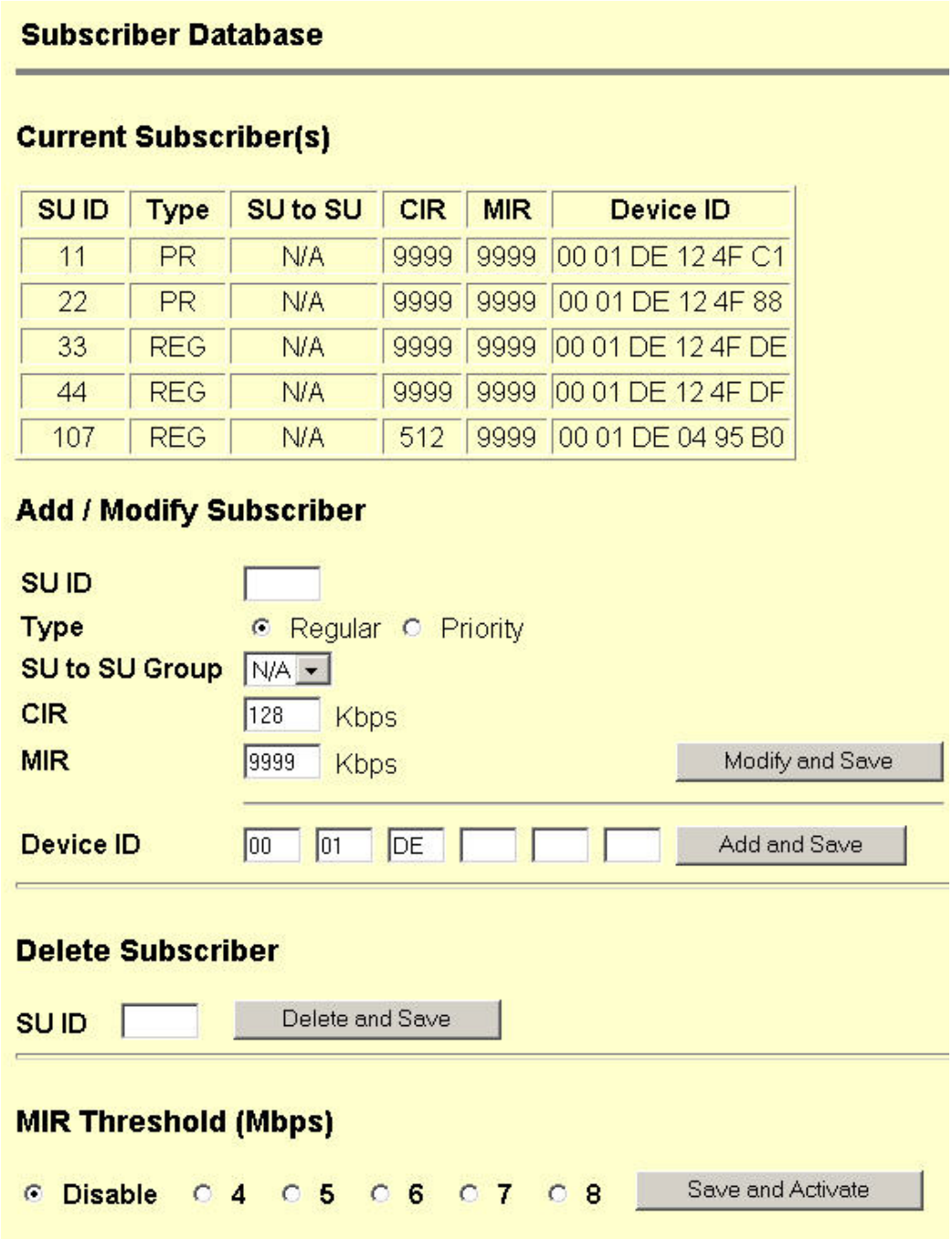

Current Subscriber(s): This table contains the database for the only SUs that can link to this AP. It displays one SU per row. This table is empty by default. Descriptions of the individual parameters are below:

SU ID: An integer that uniquely identifies the SU within this AP's SUDB (1~8190).

Type: Is a polling priority; it is either PRIORITY or REGULAR. Note: SUs designated as PRIORITY will get polled more often by the AP.

SU to SU Group: This parameter is a peer-to-peer group that the SU belongs to. By default, two SUs connected to the same AP cannot communicate to each other. With the SU to SU switch turned on, SUs in the same peer-to-peer group can communicate to each other via the AP. There are 15 groups (1~F hexadecimal) available. Please note that the SUs should be set as priority users for this feature to improve latency, and they must share the same subnet.

CIR: Committed Information Rate, or minimum bandwidth, the SU will have delivered from the AP (0~9999).

MIR: Maximum Information Rate, or maximum bandwidth, the SU will have delivered from the AP (0~9999).

Device ID: The SU's MAC address, which is printed on the back of the SU.

Add and Save: Use a new SU ID to add. Add up to 2000 entries in the SUDB. It is recommended that users not enter any more SUs than necessary since excessive numbers of inactive SUs in the database will negatively impact system performance.

Modify and Save: Modify an existing SU entry.

Delete and Save: Is performed by typing the SU ID of the unit you want to delete and clicking the button.

MIR Threshold: User specified MIR Threshold to determine total throughput level at which AP serves only CIR (committed information rate) to associated SUs. When MIR Threshold is disabled, the AP will attempt to serve MIR for all its SUs. When MIR Threshold is activated, and the network traffic exceeds the MIR threshold, the AP will only serve CIR for all its SUs. When MIR Threshold is activated, and the network traffic does NOT exceed the MIR threshold, the AP will still serve MIR for all its SUs.

Site Survey Page

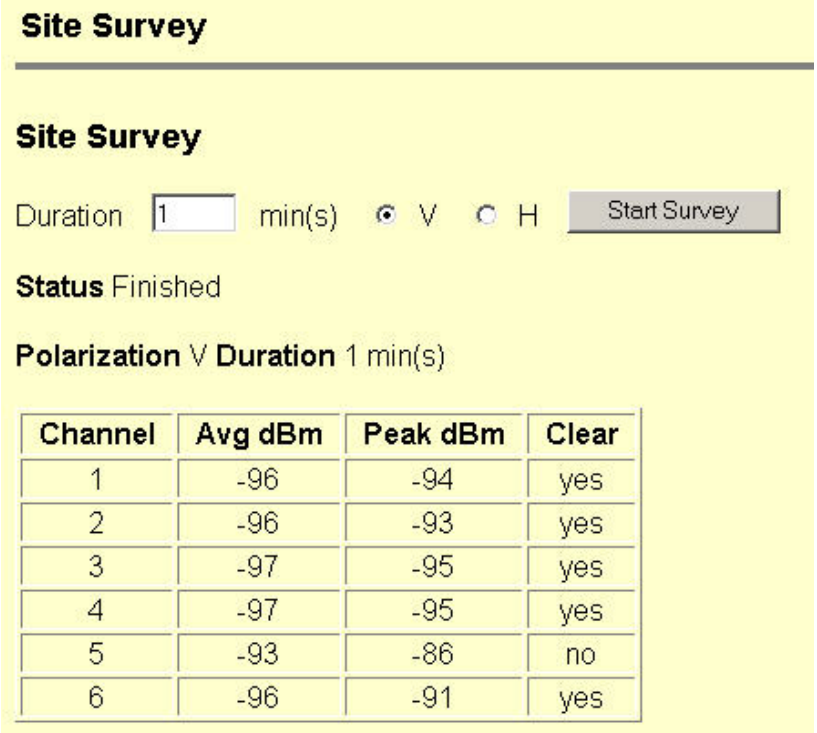

Channel	Avg dBm	Peak dBm	Clear
1	-96	-94	yes
2	-96	-93	yes
3	-97	-95	yes
4	-97	-95	yes
5	-93	-86	no
6	-96	-91	yes

The Site Survey is an extremely useful tool in determining whether there is interference.

Enter the number of minutes desired for the survey and select the polarization. Then click "Start Survey." It surveys the first 11 channels across both bands. Results are reported. A channel is clear if the peak and average power levels detected are equal to or 8 dBm below the RF Threshold.

A similar page is available on the SU.

Link Control Page

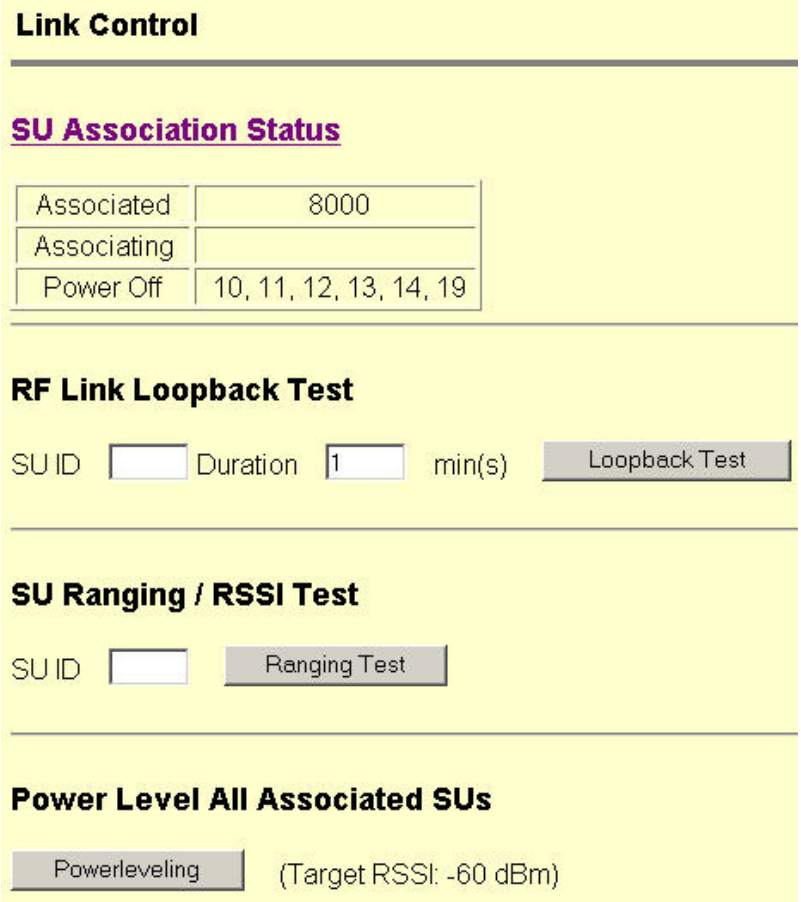

SU Association Status: Shows SU ID numbers and status of SUs. Power Off is equivalent to Not Associated.

RF Link Loopback Test: This is the built-in performance test. Specify a SU ID and time in minutes to conduct the test. The test is prioritized, so it will take precedence over all other traffic. 1600 byte packets are sent and received between the SU and AP at 50 millisecond intervals over the time specified. The success rate and number of bytes is reported.

SU Ranging/RSSI Test: Reports the distance for specified SU from the AP in miles, and the received signal strength for uplink and downlink.

Power Level all SUs: Adjusts the transmit power of all SUs to attempt to bring the AP's received signal strength as close as possible to the Target RSSI. Use the Advanced Setup page to adjust the Target RSSI.

Appendix B Command Set Reference

+ indicates command may not work properly through HTTP's command console.

Command	*Description*	*AP/SU*	*Remarks*
?	display complete help pages	both	
? <command>	display list of command's syntax	both	
_password <new password> <new password>	specify new password (max 15 octs)	both	
apsearch <sec> <ch #> <v | h> <ch #> <v | h>]…+	monitor traffic from all APs	both	
baud [<9600 | 115200>]	display or set console baud rate	both	default = 9600 bps.
bcastscant <all | suid> <ch#> <h | v>…	broadcast new scan and channel frequency table to a single or all SUs	AP	up to 31 channels and polarizations available AP will broadcast packet every second for 60 mins Example: *bcastscant all 3 v 2 h*
bcastscant stop	stop *bcastscant*	AP	
bye	same as "*logout*"	both	
date	display current date	both	
date [<mm> <dd> <yy>]	set current date <mm> = 1..12 <dd> = 1..31 <yy> = 1..99	AP	
echo [<on | off>]	echo input characters in telnet	both	default = on. If double characters appear while typing in the radio's CLI, the echo off command will cure the problem.
eth <link | r | w | reset>	display or set Ethernet setting	both	
exit	same as "*logout*"	both	
freq	display current channel	Both	
freq <ch#> <h | v>	change current channel and polarization	Both	Example: *freq 6 v* Note: This command is typically used to temporarily change a radio's channel.
freq channeltable	display channel table	Both	
freq scantable	display scan sequence table	Both	
freq writechannel [<ch #> <freq>]…	build channel and write to flash <ch #> = 1..30, <freq> = 5736..5836	Both	channel # 31 is invalid. Example: *freq writechannel 5 5755 6 5775*
freq writescan [<ch #> <h | v>]	set active channel and polarization	AP	Use this command to change channel and polarization, and write to flash.
freq writescan [<ch #> <h | v>]…	build scan sequence in SU <ch #> = 1..30	SU	channel # 31 is invalid. Example: *freq writescan 1 h 2 v 3 h*
help	display complete help text	Both	
help <command>	displays list of command's syntax	Both	
heater [<on temp> <off temp>]	changes the turn-on and turn-off temperature threshold (in °C) of the radio's internal heater		Normally the user will not need to alter this setting. Example: *heater 0 10*

Command	*Description*	*AP/SU*	*Remarks*
ipconfig <new ip> <new subnet mask> <new gateway>+	assign radio's IP, subnet mask, and gateway IP	Both	
linktest <su id> [<packet length, bytes> [<# of packets> [<# of cycles>]]]	perform over-the-air test for packet loss and throughput	AP	
log	display last log entry: 1. Time tag (sec) 2. RF receives user payload in Kbytes 3. RF transmits user payload in Kbytes 4. Local Ethernet receives user payload in Kbytes 5. Local Ethernet transmits user payload in Kbytes 6. RSSI (SU only) 7. TX power (SU only) 8. Temp	Both	one log entry every min
log <# of entry, 1..179>	display last log entries	Both	up to 3 hours
log sum <# of entry, 1..179>	display the sum of last log entries 1. RF receives user payload in Kbytes 2. RF transmits user payload in Kbytes 3. Local Ethernet receives user payload in Kbytes 4. Local Ethernet transmits user payload in Kbytes 5. RSSI of latest log entry (SU only) 6. TX power of latest log entry (SU only) 7. Temp of latest log entry	Both	up to 3 hours
logout	logout of CLI session	Both	
maclist [<reset>]	display or resets MAC table	Both	
opmode	display current Opmode	Both	
opmode ap [<y>]	set Opmode to be AP (use "y" if Opmode is not same as default)	AP	
opmode su [<y>]	set Opmode to be SU (use "y" if Opmode is not same as default)	SU	
ping <ip address>	ping local Ethernet device	Both	It only works for local Ethernet devices, not SU or any device behind SU.
power	display default and current TX power level	Both	default = max
power <setism | setunii> <min | max | dBm>	specify TX power for both bands	Both	SUs' power will be adjusted by AP when associated
reboot	reboot unit	Both	
remarks [<str>]	string length should be 1 to 28 characters	Both	

Command	*Description*	*AP/SU*	*Remarks*
reset [<all | 0...n>]…	reset radio to factory default settings Parameters are in groups. The following parameters will be reset for the AP: 0 - BASE ID = 1, AP ID = 1 Subnet Mask = 255.255.255.0 Gateway = radio IP Password = trango 1 - Channel Tables Active Channel = 1 h 2 - TX Power = Max RF Threshold = -90 dBm Target RSSI = -60 dBm Service Radius (ISM/UNII) = (10/4) mi MIR Threshold = off 3 - SNMP Community String (Read/Write) = (public/private) SU: 0 - BASE ID = 1, AP ID = 1 SU ID = 1 Subnet Mask = 255.255.255.0 Gateway = radio IP Password = trango 1 - Channel Tables Scan Table = 1 h 7 h Active Channel = 1 h 2 - TX Power = Max RF Threshold = -90 dBm	Both	Examples: *reset all* – resets parameters 0-3. *reset 0* – resets Base ID, AP ID, subnet, gateway, and password. *reset 1* - resets channel tables Note: parameter #3 does not apply to SU
restart	same as "*reboot*"		
rfrxth [<ism | unii> <-90|-85|-80|-75|-70|-65>]	specify RF RX Threshold	Both	default = -90 dBm for both bands
rfrxthreshold …	same as "*rfrxth*"	Both	
rssi	display current RX RSSI from associated radio	Both	
rssi r +	display RX RSSI continuously	Both	
save	same as "*updateflash*"	Both	Examples: *save ss* (save system settings) *save sudb* (save SUDB changes) *save mainimage* (update flash memory with new firmware)
set apid <ap-id>	set AP ID, <ap-id> = 1..255	Both	
set baseid <base-id>	set base station id, <base-id> = 1..127	Both	
set defaultopmode ap <mins>	set default Opmode to be AP, <min> = 0..10	AP	default Opmode is AP, 0 = 30 s
set defaultopmode su <mins>	set default Opmode to be SU, <min> = 0..10	SU	default Opmode is SU, 0 = 30 s
set gateway [<ip address>]	set or display gateway's IP	AP	If IP is 0.0.0.0, or

Command	*Description*	*AP/SU*	*Remarks*
			255.255.255.255, radio will not ping gateway.
set httpport [<port #>]	set or display HTTPD port number	Both	default = 80
set mir <on | off>	enable or disable MIR threshold	AP	default = off
set mir threshold [<kbps>]	set MIR threshold, <kbps> = 1000..9999	AP	default = 6114 kbps (6 Mbps)
set rssitarget <dB>	set Target RSSI to be received from SUs	AP	It must be in the range -45 to -75 and +5 dB higher than RF RX Threshold.
set serviceradius [<ism | unii> <miles>]	set or display service range, <miles> = 0 .. 30	AP	default: ISM = 10 miles UNII = 4 miles Used for determining timeout duration in polling sequence. Does not actually determine service range.
set snmpcomm [<read | write | trap (id | setall str)>]	display or assign SNMP community string	AP	Community string is SNMP's password.
set suid <su-id>	specify unit's SU ID	SU	After changing SU ID it is recommended to reboot the radio.
set telnetport [<port #>]	specify telnet port, <port #> = 1..65534	Both	default = 23
ssrssi <ch #> <v | h>	display RSSI on the current channel	Both	Useful for antenna alignment. To stop the continuous readout hit space, enter.
su	display the SU info summary	AP	
su <suid>	display SU payload status	AP	
su all	display all registered SU	AP	
su info <su-id>	display request SU's info: 1. H/W version 2. F/W date code 3. FPGA version 4. Image checksum 5. Device ID 6. IP address 7. Scan sequence table 8. Packet filter on/off 9. Auto scan AP on/off 10. TCPIP for AP on/off 11. HTTPD on/off 12. Remarks	AP	
su ipconfig <new ip> <new subnet> <new gateway>	assign radio's IP, subnet mask, and gateway IP	AP	
su live	display all SUs that are associated	AP	
su password <all | suid> <pwd> <pwd>	set SU's password remotely	AP	
su ping <su-id>	request SU's ranging and RSSI information	AP	
su powerleveling <all | suid> [<target, dB>]	calibrate SU's power leveling	AP	Target RSSI in dB
su poweroff	display all SU that are in the "poweroff" group	AP	
su priority	display all SUs that are in the priority group	AP	

Command	*Description*	*AP/SU*	*Remarks*
su reboot <su-id>	reboot one SU	AP	
su reboot all	reboot all associated SU	AP	
su restart <su-id>	restart one SU	AP	
su restart all	restart all associated SU	AP	
su rssi <su-id>	request SU's RSSI	AP	
su status <su-id>	display request SU's current status: 1. Current time mark 2. RF receives user payload in Kbytes 3. RF transmits user payload in Kbytes 4. Local Ethernet receives user payload in Kbytes 5. Local Ethernet transmits user payload in Kbytes 6. Current RSSI 7. Current RF Tx Power (dBm) 8. Current temp	AP	
su sw <su-id | all> <sw #> <on | off>	set SU's sw # on or off	AP	
su testrflink <suid> [<r>]	send 20 1512 bytes long packet payload to <suid> and listen r: will repeat until user presses space enter	AP	Example: *su testrflink 10 r*
su testrflink all [<r>]	send 20 1512 bytes long packet to all associated SU and listen	AP	
su testrflink aptx [<# of pkts, 20..100>]	set or display # of pkts per cycle	AP	default = 20
su testrflink setlen [<length in bytes>]	set or display the length of test packet <length> = 64 .. 1600 and must be times X4	AP	default length = 1512
sudb add <suid> <pr | reg> <cir> <mir> <device id>	add new entry to SUDB	AP	Example: *sudb add 7 pr 9999 9999 00 01 DE 34 32 E5*
sudb delete <suid | all>	remove one or all entries from SUDB	AP	
sudb dload	download and interpret SUDB file from TFTP buffer and write to flash memory	AP	Used to load a text file that contains the SUDB into the AP. This command can be useful if there are large numbers of SUs associated with an AP. User will create a text file according to the format described in the "management" chapter. User must TFTP the SUDB file into the radio's TFTP buffer. Then type the command ***sudb dload***. Note: This command must be followed by ***save sudb***.
sudb modify <suid> <cir | mir> <kbps>	modify CIR and MIR setting in one entry	AP	Example: *sudb modify 7 cir 516*
sudb modify <suid> <su2su> <group-id, 0..F>	modify group ID for SU to SU communication	AP	Example: *sudb modify 7 su2su 6*

Command	*Description*	*AP/SU*	*Remarks*
	group 0: disabled group		
sudb view	display all entries in SUDB	AP	
sulog	display last SU log 1. Time tag (ms) 2. Sample period (1..60 mins) 3. RF receives user payload in Kbytes 4. RF transmits user payload in Kbytes 5. Local Ethernet receives user payload in Kbytes 6. Local Ethernet transmits user payload in Kbytes 7. RSSI 8. TX power 8. Temp	AP	default sample period = 10 mins
sulog <# of entry, 1..18>	display SU log entry (#)	AP	up to 18 entries (3 hours)
sulog lastmins [<time stamp, sec>]	If time stamp = current up time stamp, then will display last SU log. Otherwise will display: [#Begin] [#None] [#End]	AP	
sulog sampleperiod [<1..60>]	set or display SU log sample period	AP	default sample period = 10 mins
survey <ism | unii> <sec> <h | v>	spectrum analysis pf the entire band	Both	Example: *survey ism 30 h*
sw	display current switch settings	Both	
sw 0 [<on | off>]	packet filter for broadcast/multicast On = filtering	Both	default = on need to update flash
sw 1 [<on | off>]	enable SU to autoscan searching each channel in scan table for AP On = Autoscan enabled	SU	default = on need to update flash
sw 2 [<on | off>]	TCP/IP service for AP. Allows TCP/IP access to SU from AP side of network via wireless link.	SU	default = off need to update flash
sw 3 [<on | off>]	enable SU to SU feature (peer-to-peer)	AP	default = off need to update flash
sw 4 [<on | off>]	broadcast time stamp to SU (AP only)	AP	default = off need to update flash
sw 5 [<on | off>]	HTTPD browser interface enable / disable. On = enabled	Both	default = on need to update flash
sw 6 [<on | off>]	TCP/IP Access to Ethnernet port of SU while radio is in Opmode SU	SU	default = on need to update flash
sysinfo	display system configuration	Both	
temp	display current temperature	Both	Note: FOX series SU does not include an internal temperature sensor. FOX series radio receives its temperature from the AP, as long as AP is running current firmware. If AP is running older firmware, FOX Series SU will report temperature of 35° C.

Command	*Description*	*AP/SU*	*Remarks*
tftpd [<on | off>]	enable or disable TFTPD service		
time	display current time	Both	
time <hh> <mm> <ss>	set current time <hh> = 0..23 <mm> = 0..59 <ss> = 0..59	AP	
tm	display current time mark	Both	
updateflash _loader+	For updating the radio's loader firmware. Gets loader image from TFTP buffer and writes to flash memory at loader image section.	AP	This command is rarely used since the loader firmware does not often require updating.
updateflash <mainimage | fpgaimage> <current checksum> <new checksum>	For updating radio's main firmware or FPGA firmware. Gets firmware image from TFTP buffer, verifies checksum, and writes to flash memory at main or FPGA image section.	Both	Examples: **updateflash mainimage 483985 1092844** *updateflash fpgaimage 83383 393D38*
uniimaxpower [<dBm>]	set max TX power limit	SU	For M5830S-SU-EXT only. Example: *uniimaxpower 6* This command is used to set the maximum power output of the radio while it is operating in the U-NII band.
updateflash sudb	write current SU database into flash memory at SUDB section	AP	
updateflash systemsetting	write current configuration into flash memory at system configuration section	Both	same results achieved with abbreviated command: *save ss*
ver	displays firmware version info 1. version number and date code 2. Firmware and FPGA version code 3. Firmware and FPGA image checksum	Both	

Appendix C Specifications

M5830S-SU and M5830S-AP-60

All specifications apply to the M5830S-SU and M5830S-AP-60 radios unless otherwise stated.

Radio Transmit Specifications

Frequencies:		
Storable Channels:	30 memory locations	
Channel spacing:	Low Band:	5.260 to 5.340 GHz in 1 MHz increments
	High Band:	5.736 to 5.836 GHz in 1 MHz increments
Default Channels-		
Channel 1:	5.736 GHz	
Channel 2:	5.756 GHz	
Channel 3:	5.776 GHz	
Channel 4:	5.796 GHz	
Channel 5:	5.816 GHz	
Channel 6:	5.836 GHz	
Channel 7:	5.260 GHz	
Channel 8:	5.280 GHz	
Channel 9:	5.300 GHz	
Channel 10:	5.320 GHz	
Channel 11:	5.340 GHz	
Channel 12-30: Unprogrammed		
AP RF Conducted Power:	Low Band:	Max: +16 dBm +/- 2 dB
		Min: -8 dBm +/- 2 dB
	HighBand:	Max: +22 dBm +/- 2 dB
		Min: -8 dBm +/- 2 dB
AP EIRP Max:	+36 dBm High band with internal 14 dBi patch antenna	
	+30 dBm Low band with internal 14 dBi patch antenna	
SU RF Conducted Power:	Low Band:	Max: +13 dBm +/- 2 dB
		Min: -8 dBm +/- 2 dB
	High Band:	Max: +22 dBm +/- 2 dB
		Min: -8 dBm +/- 2 dB
SU EIRP Max:	+40 dBm High band with internal 18 dBi patch antenna (M5830S-SU only)	
	+30 dBm Low band Maximum	
Freq. Stability:	.00025 % PLL Stabilized (2.5 ppm) over temp	
Freq. Plan:	Double upconversion, 480 MHz IF	
Modulated BW:	22 MHz (null to null, 20 dB)	
2nd Harmonic atten:	Per CFR47 part 15.205	
LO Supression:	Per CFR47 part 15.205	
Symbol Rate:	1.375 MSPS	
Error Correction:	None	
Modulation:	1 MBPS DBPSK for header, 11 MBPS CCK spread spectrum for payload	

Receiver Section

Cascade Noise Figure:	< 6 dB
Sensitivity:	- 83 dBm typical-1600 byte packet
(1E10-6 BER)	- 87 dBm typical-64 byte packet
Adj. Channel Rejection:	> 20 dB for 10 % PER
Image Rejection:	> 60 dB for 10% PER
Frequency Plan:	Double conversion, IF at 480 MHz

LO stability:	.00025% PLL stabilized (+/-2.5ppm) over temperature range

Data Input Section

Data Rate (User):	Up to 10 MBPS Sustained throughput
Format:	10/100 BaseT IEEE 802.3 Ethernet compliant
Ethernet packet:	Up to 1600 byte long packets

Power

Input Voltage:	Input voltage range at unit is 10.5 VDC to 28 VDC max

Power is supplied over Ethernet cable using junction box provided, with up to 300 feet of 24 AWG STP cable.

Current Cons.:	575 mA in transmit mode at max power using 24 V standard adapter (11.5W) 500 mA in receive mode using 20 V standard adapter (10 W)

Data Output Section

Data Rate (User):	10 MBPS Maximum sustained throughput
Format:	10/100 BaseT IEEE 802.3 Ethernet compliant
Ethernet Protocols:	TCP/IP, Telnet, TFTP, UDP, and HTTP

Physical Interfaces

Serial Interface:	Shielded RJ11 connector
LAN Interface:	Shielded RJ45 connector
Power:	Carried on 4 unused pins of Ethernet cable

Mechanical and Environmental

General

Material:	Powdercoated Aluminum base with polycarbonate radome
Size:	12.5”x5”x8” including mounting studs
Weight:	4 lbs
Mounting:	Pole mounting hardware provided

Environmental

Operating Temp:	-40° - 60° C
Storage:	-40° - 85° C
Humidity:	100 % when sealed properly
NEMA Rating:	NEMA 4
Shock:	Sustain 3 axis drop from 5 feet

Standard Power Supply

24 Volt DC Power adapter and J-Box supplied with product.

Type:	Linear wall mount transformer
Input:	120 VAC
Output:	24 VDC +/- 1 V
Max current:	1200 mA

FCC Compliance:

The transceiver shall comply with the following regulations:
FCC 15.247 Spread Spectrum transmitter
FCC 15.407(2) UNII Band 2 transmitter

Part 15 Subpart B
Class B Digital device verification

Part 15 Subpart C
FCC 15.203 Antenna connection requirement – non-standard connection
FCC 15.209 Unwanted emissions below 1GHz

FCC 15.207(a) AC conducted emissions 450Khz to 30 MHz
FCC 15.205 Restricted bands (LO and harmonics)= 54 dBuV average @3 meters
EN 301 489-1 Part 7.2 - RF Immunity

M5830S-SU Internal Patch Antenna

Type:	Patch Array Antenna
Polarization:	Vertical and Horizontal electrically selectable
Frequency:	5.2 to 5.9 GHz
Gain:	+17 +/- 1 dBiL (Low Band)
	+18 +/- 1 dBiL (High Band)
Az Beamwidth:	18 degrees (3 dB down)
El Beamwidth:	10 degrees (3 dB down)
Cross Pol:	>20 dB
Front/Back:	>30 dB
Cross Pol:	>15 dB
Front/Back Ratio:	>30 dB
VSWR:	2:1
Wind Loading:	80 mph operational

M5830S-AP-60 Internal Patch Antenna

Type:	Patch Array Antenna
Polarization:	Vertical, Horizontal electrically selectable
Frequency:	5.2 to 5.9 GHz
Gain:	+14 +/- 1 dBiL (Low Band)
	+14 +/- 1 dBiL (High Band)
Az Beamwidth:	>60 degrees (3 dB down)
El Beamwidth:	10 degrees (3 dB down)
Cross Pol:	>20 dB
Front/Back:	>30 dB

FOX Series Subscriber Units

Radio Transmit Specifications

M5800S-FSU, M5800S-FSU-D, M5800S-FSU-D2
Frequency Range: 5.736 to 5.836 GHz adjustable in 1 MHz channel increments
Default Channels-

Channel 1:	5.736 GHz
Channel 2:	5.756 GHz
Channel 3:	5.776 GHz
Channel 4:	5.796 GHz
Channel 5:	5.816 GHz
Channel 6:	5.836 GHz

M5300-FSU
Frequency Range 5.260 to 5.340 GHz adjustable in 1 MHz channel increments

Channel 7:	5.260 GHz
Channel 8:	5.280 GHz
Channel 9:	5.300 GHz
Channel 10:	5.320 GHz
Channel 11:	5.340 GHz

RF Conducted Power:	M5800S-FSU:	Max: +21 dBm +/- 2 dB
		Min: -12 dBm +/- 2 dB
	M5800S-FSU-D:	Max: +21 dBm +/- 2 dB
		Min: -12 dBm +/- 2 dB

	M5800S-FSU-D2	Max: 24 dBm +/- 2 dBm Min: -12 dBm +/ 2dB
	M5300S-FSU:	Max: +15 dBm +/- 2 dB Min: -12 dBm +/- 2 dB
EIRP Max:	M5800S-FSU:	+36 dBm
	M5800S-FSU-D:	+46 dBm (with AD5800-25-D Reflector)
	M5800S-FSU-D2	+49 dBm (with AD5800-25-D Reflector)
	M5800S-FSU-D2	+32 dBm (without reflector)
	M5300S-FSU:	+30 dBm

Freq. Stability:	.00025 % PLL stabilized (2.5 ppm) over temp
Freq. Plan:	Double upconversion, 480 MHz IF
Modulated BW:	22 MHz (null to null, 20 dB)
2nd Harmonic atten:	Per CFR47 part 15.205
LO Supression:	Per CFR47 part 15.205
Symbol Rate:	1.375 MSPS
Error Correction:	None
Modulation:	1 Mbps DBPSK for header, 11 Mbps CCK spread spectrum for payload

Receiver Section (check these figures)

Cascade Noise Figure:	< 6 dB
Sensitivity:	- 82 dBm typical-1600 byte packet
(1E10-6 BER)	- 87 dBm typical-64 byte packet
Adj. Channel Rejection:	> 20 dB for 10 % PER
Image Rejection:	> 60 dB for 10% PER / double conversion
Frequency Plan:	IF at 480 MHz
LO stability:	.00025% PLL stabilized (+/-2.5ppm) over temperature range

Data Input Section

Data Rate (User):	Up to 10 Mbps sustained throughput
Format:	10/100 BaseT IEEE 802.3 Ethernet compliant
Ethernet packet:	Up to 1600 byte long packets

Power

Input Voltage:	Input voltage range at unit is 10.5 VDC to 24 VDC max

Power is supplied over Ethernet cable using junction box provided, with up to 300 feet of 24 AWG STP cable.

Current Cons.:	400 mA in transmit mode at max power using 20 V standard adapter (8 W)

Data Output Section

Data Rate (User):	10 Mbps maximum sustained throughput
Format:	10/100 BaseT IEEE 802.3 Ethernet compliant
Ethernet Protocols:	TCP/IP, Telnet, TFTP, UDP, and HTTP

Physical Interfaces

LAN Interface:	Shielded RJ45 connector
Power:	Carried on 4 unused pins of Ethernet cable

Mechanical and Environmental

General Material:	High Temp ABS/Polycarbonate Enclosure
Size:	9.2”x4.25”3.1”
Weight:	1.5 lb (radio)
Mounting:	Polycarbonate Wall/Pole mount bracket

Environmental

Operating Temp:	-40° to 60° C
Storage:	-40° to 85° C
Humidity:	100 % when sealed properly
NEMA Rating:	NEMA 4

Standard Power Supply

20 Volt DC Power adapter and J-Box supplied with product.

Type:	Linear wall mount transformer
Input:	120 VAC
Output:	20 VDC +/- 1 V
Max current:	1200 mA

FCC Compliance

The transceiver complies with the following regulations:
M5800S-FSU, M5800S-FSU-D, M5800S-FSU-D2: FCC 15.247 Spread Spectrum transmitter
M5300S-FSU: FCC 15.407(2) U-NII Band 2 transmitter

Part 15 Subpart B
Class B Digital device verification

Part 15 Subpart C
FCC 15.203 Antenna connection requirement – non-standard connection
FCC 15.209 Unwanted emissions below 1GHz
FCC 15.207(a) AC conducted emissions 450Khz to 30 MHz
FCC 15.205 Restricted bands (LO and harmonics)= 54 dBuV average @3 meters

M5800S-FSU and M5300S-FSU Antenna Specifications

Type:	Patch Array Antenna
Polarization:	Vertical, Horizontal electronically selectable
Range:	M5800S-FSU: 4 Miles (LOS) from Access5830 AP with 10 dB fade margin M5300S-FSU: 2 Miles (LOS) from Access5830 AP with 10 dB fade margin
Frequency:	5.2 to 5.9 GHz
Gain:	+15 ± 1 dBi
Azimuth Beamwidth:	32°
Elevation Beamwidth:	18°

M5800S-FSU-D2 Antenna Specifications (stand alone)

Type:	Patch Array Antenna
Polarization:	Vertical, Horizontal electronically selectable
Range:	2 miles (LOS) with 10 dB fade margin
Frequency:	5.7 to 5.9 GHz
Gain:	+8 ± 1 dBi
Azimuth Beamwidth:	60°
Elevation Beamwidth:	60°

M5800S-FSU-D & M5800S-FSU-D2 Antenna Specifications (when mounted on AD5800-25 Reflector Dish)

Type:	DSS Style Dish Antenna
Polarization:	Vertical, Horizontal electronically selectable
Range:	10 Miles (LOS) from Access5830 AP with 10 dB fade margin
Frequency:	5.7 to 5.9 GHz
Gain:	+25 dBi
Azimuth Beamwidth:	9°
Elevation Beamwidth:	9°

Appendix D RF Primer

This section explains and simplifies many of the concepts relating to antennas and RF (Radio Frequency) technology. It is not intended as a substitute for all the academic background that can be useful in deploying any wireless system.

General Concepts

A radio system modulates, or encodes, information to the transmitter. This modulated signal is transmitted through an antenna, which converts the RF signal into an electromagnetic wave. The transmission medium for the electromagnetic wave is free space (air). The electromagnetic wave is intercepted by the receiving antenna, which converts it back to an RF signal. Ideally, this RF signal is the same as the one originally generated by the transmitter. The signal is then demodulated back to its original form.

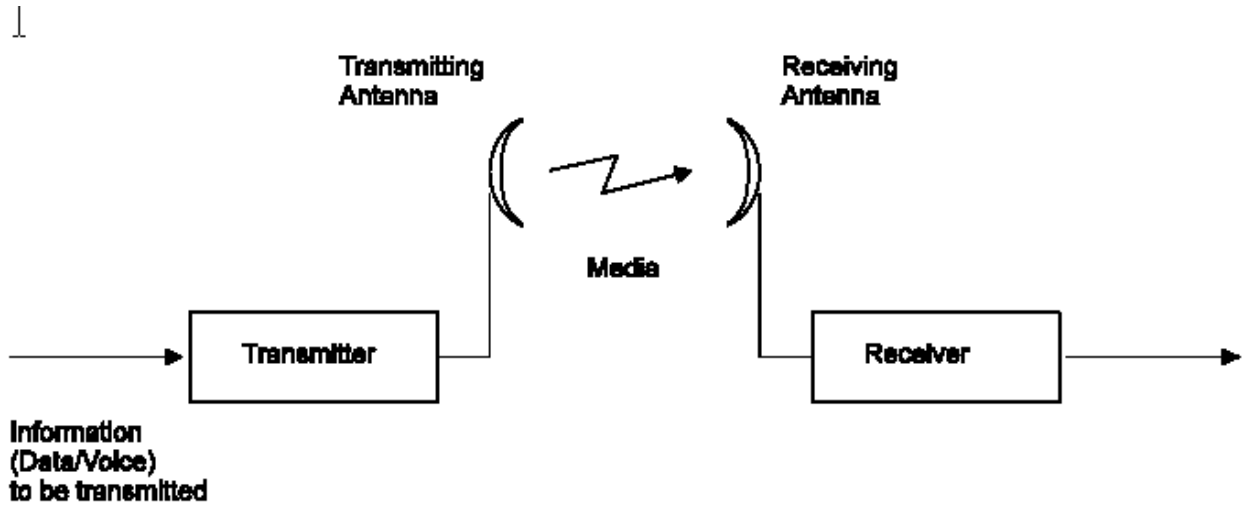

Figure 9-1: Typical Radio System

RF Power Level

The dB convention is an abbreviation for decibels. It shows the relationship between two values. For example dBm is the relation between power levels expressed in Watts. RF power levels at either the transmitter output or the receiver input is expressed in dBm. It can also be expressed in Watts. For link budget calculations, the dBm convention is more convenient than the Watts convention. The relation between dBm and Watts can be expressed as follows:

$$P_{dBm} = 10 \times \text{Log}\ (PmW/1mW)$$

For example:

$$1\ \text{Watt} = 1000\ \text{mW};$$

$$P_{dBm} = 10 \times \text{Log}\ (1000mW/1mW) = 30dBm$$

Attenuation

Attenuation (fading) of an RF signal is defined as follows:

Figure 9-2: Attenuation of an RF signal

P_{in} is the incident power level at the attenuated input. Pout is the output power level at the attenuated output. Attenuation is expressed in dB as follows:

$$P_{dB} = -10 \times \text{Log}\,(P_{out}/P_{in})$$

For example: If, due to attenuation, half the power is lost (Pout/Pin = 1/2), attenuation in dB is:

$$-10 \times \text{Log}\,(1/2) = 3\text{dB}$$

Path Loss

It is the loss of power of an RF signal traveling (propagating) through space. It is expressed in dB. Path loss depends on:

- The distance between transmitting and receiving antennas
- Radio line of sight clearance between the receiving and transmitting antennas
- The precision with which the antennas are aimed

Free Space Loss

Is the attenuation of an electromagnetic wave while propagating through space. This attenuation is calculated using the following formula:

$$\text{Free space loss} = 32.4\text{dB} + 20\text{x}\text{Log}(F_{MHz}) + 20\text{x}\text{Log}(R_{Km})$$

Where F is the RF frequency expressed in MHz, R is the distance between the transmitting and receiving antennas. At 5.8 GHz, this formula is:

$$100+20\text{x}\text{Log}(R_{Km})$$

Antenna Characteristics

Isotropic Antenna

Is a hypothetical antenna having equal radiation intensity in all directions. It is used as a zero dB gain reference in radiated power calculations (gain).

Antenna Gain

A measure of radiated power relative to an isotropic antenna. Antenna gain is expressed in dBi.

Radiation Pattern

A graphical representation in either polar or rectangular coordinates of the spatial energy distribution of an antenna.

Side Lobes

The radiation lobes in any direction other than that of the main lobe.

Omni-directional Antenna

Radiates and receives equally in all directions (in azimuth and elevation). The following diagram shows the radiation pattern of an omni-directional antenna with its side lobes in polar form.

Directional Antenna

Radiates and receives most of the signal power in one direction. The following diagram shows the radiation pattern of a directional antenna with its side lobes in polar form.

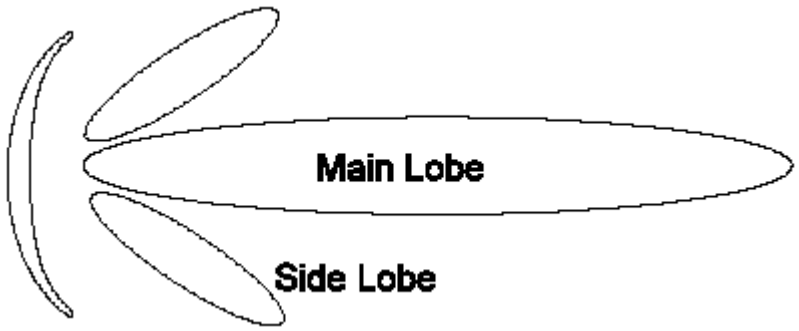

Figure 9-3: Radiation Pattern of Directional Antenna

Antenna Beamwidth

It is a common figure of merit used to define the angle between two half-power (-3 dB) points on either side of the main lobe of radiation.

Receiver Sensitivity

Receiver sensitivity is defined as the minimum RF signal power level required at the input of a receiver for certain performance (i.e. BER).

EIRP

EIRP (Effective Isotropic Radiated Power) is defined as the antenna transmitted power that is equal to the transmitted output power minus cable-loss plus the transmitting antenna gain.

Pout = Output power of transmitter expressed in dBm
Ct = Transmitter cable attenuation in dB
Gt = Transmitting antenna gain in dBi
Gr = Receiving antenna gain in dBi
Pl = Path loss in dB
Cr = Receiver cable attenuation is dB
Si = Received power level at receiver input in dBm
Ps = Receiver sensitivity in dBm
Si = Pout - Ct + Gt - Pl + Gr - Cr
EIRP = Pout - Ct + Gt

Link Budget Example:

Link Parameters:
Frequency: 5.8 GHz
Pout = 4 dBm (2.5 mW)
Tx and Rx cable length (Ct and Cr) = 10 m. cable type RG214 (0.6 dB/meter)
Tx and Rx antenna gain (Gt and Gr) = 17 dBi
Distance between sites = 3 Km
Receiver sensitivity (Ps) = -85 dBm

Link Budget Calculation:
EIRP = Pout - Ct + Gt = 16 dBm
Pl = 32.4 + 20xLog(FMHz) + 20xLog(RKm) □117 dB
Si = EIRP - Pl + Gr - Cr = -79 dBm

In this example the received signal power is above the sensitivity threshold, so the link should work. The problem is that there is only a 6 dB difference between received signal power and sensitivity. Normally a higher margin is desirable due to fluctuation in the received power as a result of signal fading.

Signal Fading

Fading is any loss of signal from a wide variety of factors: RF noise, solar flares, variations in the atmosphere, internal noise in the system, all play a role.

Multipath

The transmitted signal arrives at the receiver from different directions, with different path lengths, attenuation and delays. The summed signal at the receiver may result in an attenuated signal.

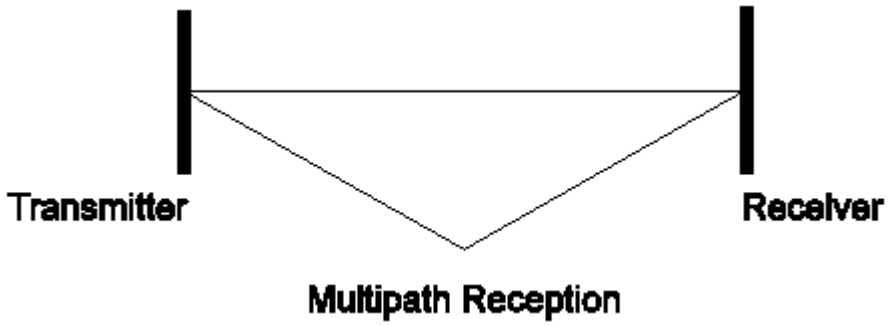

Figure 9-4: Multipath Reception

Line of Sight

An optical line of sight exists if an imaginary straight line can connect the antennas on either side of the link. Radio wave clear line of sight exists if a certain area around the optical line of sight (Fresnel zone) is clear of obstacles. Poor line of sight exists if the first Fresnel zone is obscured.

- Link Budget Calculations
- Weather conditions (rain, wind, etc.) At high rain intensity (150 mm/hr), the fading of an RF signal at 5.8 GHz may reach a maximum of 0.02 dB/Km, and wind may cause fading due to antenna motion.
- Interference: Interference may be caused by another system on the same frequency range, external noise, or some other co-located system.

Radio Line of Sight

A clear line of sight exists when no physical objects obstruct viewing one antenna from the location of the other antenna.

A radio wave clear line of sight exists if a defined area around the optical line of sight (Fresnel Zone) is clear of obstacles.

Fresnel Zone

The Fresnel zone is the area of a circle around the line of sight. The Fresnel Zone is defined as follows:

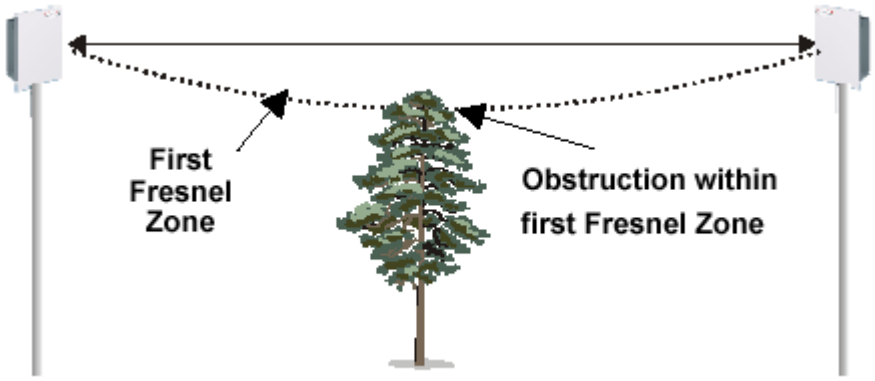

Figure 9-5: Fresnel Zone Obstruction

When at least 80% of the first Fresnel Zone is clear of obstacles, propagation loss is equivalent to that of free space.

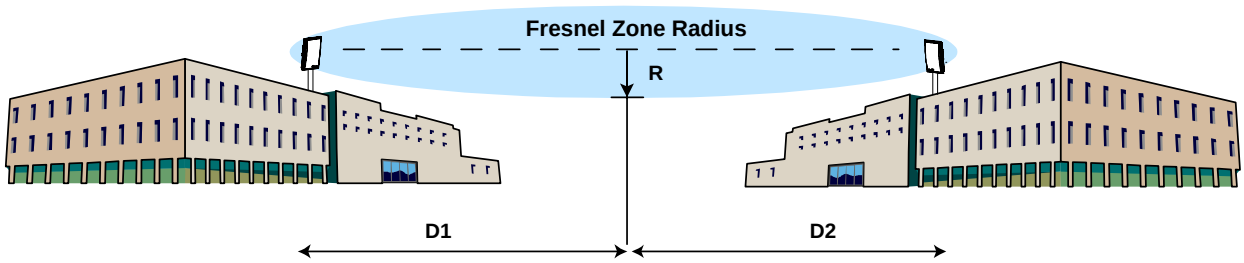

The formula for calculating the radius of the first Fresnel zone, as depicted in Figure 30, is given as:

$$R = 72.1\sqrt{\frac{D1 * D2}{f * (D1 + D2)}} \quad \text{(ft)}$$

Figure 9-6: Fresnel Zone Radius Calculation

Where D1 and D2 are the distances from the terminals to the point of interest (in miles); and ,*f* is the frequency (in GHz).

(Note: multiply results by 0.3048 to obtain a solution in meters)

Glossary

A

Antenna Gain The gain of an antenna is a measure of the antenna's ability to direct or focus radio energy over a region of space. High gain antennas have a more focused radiation pattern in a specific direction.

AP Access Point. A wireless LAN or WAN data transceiver that uses radio waves to connect a wired network with wireless stations. It is the Point in a Point-to-Multipoint system.

AP-Centric The Access5830 is a Point to Multipoint system with the access point being the single point and Subscriber Units being the multi-points. It is sometimes referred to as a cell system. See also Base Station.

Associated Term used to describe an AP and SU which are communicating in a wireless link.

B

Base Station A center of a point-to-multipoint deployment. Also called cell sites. A base station is typically the location of multiple access points.

Broadcast Packet A single data message (packet) sent to all addresses on the same subnet.

C

CCK Complementary Code Keying. A modulation technique used for wireless WAN transmission at 5.5 and 11 Mbps.

Cell The area of radio range or coverage in which the wireless devices can communicate with the base station. The size of the cell depends upon the speed of the transmission, the type of antenna used, and the physical environment, as well as other factors.

D

Data Rates The range of data transmission rates supported by a device. Data rates are measured in megabits per second (Mbps).

dBi A ratio of decibels to an isotropic antenna that is commonly used to measure antenna gain. The greater the dBi value, the higher the gain, and the more acute the angle of coverage.

DHCP Dynamic Host Configuration Protocol. A protocol available with many operating systems that automatically issues IP addresses within a specified range to devices on the network. The device retains the assigned address for a specific administrator-defined period.

Domain Name The text name that refers to a grouping of networks or network resources based on organization-type or geography. For example: name.com— commercial, name.edu— educational, name.gov— government, name.net— network provider (such as an ISP), name.ar— Argentina, name.au— Australia, and so on.

DNS Domain Name Server. A server that translates text names into IP addresses. The server maintains a database of host alphanumeric names and their corresponding IP addresses.

DSSS Direct Sequence Spread Spectrum. A type of spread spectrum radio transmission that spreads its signal continuously over a wide frequency band.

E

Ethernet The most widely used wired local area network. Ethernet uses carrier sense multiple access (CSMA) to allow computers to share a network and operates at 10, 100, or 1000 Mbps, depending on the physical layer used.

EIRP Effective Isotropic Radiated Power. Conducted RF power in dBm plus antenna gain in dBi.

Firmware Software that is programmed on a memory chip.

G

Gateway A device that connects two otherwise incompatible networks together.

GHz Gigahertz. One billion cycles per second. A unit of measure for frequency.

IP Address The Internet Protocol (IP) address of a station, or the layer three address used in routing packets.

IP Subnet Mask The number used to identify the IP subnetwork, indicating whether the IP address can be recognized on the LAN, or if it must be reached through a gateway. Number is expressed in a form similar to an IP address (i.e. 255.255.255.0).

ISM Industrial Scientific Medical. FCC designation for various parts of the radio spectrum originally allocated for unlicensed use. For the Access5830, it refers to the 5.725 to 5.850 frequency band.

Isotropic A theoretical antenna that radiates its signal 360 degrees both vertically and horizontally in a perfect sphere.

M

MAC Address Media Access Control Address. A unique 48-bit number used in Ethernet data packets to identify an Ethernet device, such as an Access Point, your client adapter, or a Subscriber Unit.

Modulation Any of several techniques for combining user information with a transmitter's carrier signal.

Multipath The echoes created as a radio signal bounces off of physical objects.

Multicast Packet A single data message (packet) sent to multiple addresses.

P

Packet A basic message unit for communication across a network. A packet usually includes routing information, data, and sometimes error detection information.

R

Range A linear measure of the distance that a transmitter can send a signal.

Receiver Sensitivity A measurement of the weakest signal a receiver can receive and still correctly translate it into data.

RF Radio frequency. A generic term for radio-based technology.

S

Spread Spectrum A radio transmission technology that spreads the user information over a much wider bandwidth than otherwise required in order to gain benefits such as improved interference tolerance and unlicensed operation.

T

Transmit Power The power level the radio transmits from its antenna port.

U

UNII Unlicensed National Information Infrastructure. Regulations for UNII devices operating in the 5.15 to 5.35 GHz and 5.725 to 5.825 GHz frequency bands.

UNII-1 Regulations for UNII devices operating in the 5.15 to 5.25 GHz frequency band.

UNII-2 Regulations for UNII devices operating in the 5.25 to 5.35 GHz frequency band.

UNII-3 Regulations for UNII devices operating in the 5.725 to 5.825 GHz frequency band.

Unicast Packet A single data message (packet) sent to a specific IP address.