Access5830™

Wireless Broadband System

USER MANUAL

[draft]

Table of Contents

Overview 3
FCC Information 3
Warranty Information 3
Getting to Know Your Radio 4
- Contents 4
- Ethernet and Serial Ports 5
- Antennas 5

AP/SU Operational Overview 5
Getting Started 7
- Connections and Power 7

Basic Configuration 8
- Opmode Concept 8
- HTTP Browser Interface 9
- Logging On to your Radio via Telnet. 9
- Access Point Set Up and Configuration 10
- AP System Information 10
- AP Subscriber Unit Database 12
- Subscriber Unit Set Up and Configuration 13
- SU System Information 14

Establishing a Wireless Link 16
- Access Point 16
- Subscriber Unit 16
- Association Concept (AP to SU communications) 16
- Basic Diagnostics 17

Deployment 18
- Site Selection 19
- Site Survey 19
- Channel Planning 19
- Installation 20
- SU Installation and Antenna Alignment 21
- Link Test 22

Managing your Access5830 Network 22
- Network Setup 22
- Command Line Interface 22
- Telnetting into remote SU 23
- Managing AP from SU side of Network 23

Troublshooting 23
Specifications 24
Appendix 1 -- Access5830™ Command Line Interface (CLI) 25
Appendix 2 – HTTP Browser Interface 33

Overview

This manual covers basic configuration and installation of the Access5830 Wireless Broadband System and applies to the following radio part numbers:

M5830S-AP-60	Access Point with internal sectoral patch antenna
M5830S-SU	Subscriber Unit with internal patch antenna

Note: The installation of the M5830S-SU requires professional installation due to FCC limits on output power settings when using the 5.3 GHz U-NII band. Contact your sales person for more information regarding the definition of "Professional Installation".

FCC Information

This device complies with Part 15 of FCC Rules and Regulations. Operation is subject to the following two conditions: (1) This device may not cause harmful interference and (2) this device must accept any interference received, including interference that may cause undesired operation.

This equipment has been tested and found to comply with the limits for a Class B digital device, pursuant to Part 15 of the FCC Rules. These limits are designed to provide reasonable protection against harmful interference in a residential installation. This equipment generates, uses, and can radiate radio-frequency energy and, if not installed and used in accordance with these instructions, may cause harmful interference to radio communications. However, there is no guarantee that interference will not occur in any particular installation. If this equipment does cause harmful interference to radio or television reception, which can be determined by turning the equipment off and on, the user is encouraged to correct the interference by one of more of the following measures:

1) Reorient the antenna;
2) Increase the separation between the affected equipment and the unit;
3) Connect the affected equipment to a power outlet on a different circuit from that which the receiver is connected to;
4) Consult the dealer and/or experienced radio/TV technician for help.

FCC ID: NCYM5830SAP
FCC ID: NCYM5830SSU
Canada: XXXXXXXXXX

IMPORTANT NOTE:
Intentional or unintentional changes or modifications must not be made unless under the express consent of the party responsible for compliance. Any such modifications could void the user's authority to operate the equipment and will void the manufacturer's warranty. To comply with FCC RF exposure requirements, the following antenna installation and device operating configurations must be satisfied. The antenna for this unit must be fixed and mounted on outdoor permanent structures with a separation distance of at least two meters from all persons. Furthermore, it must not be co-located or operating in conjunction with any other antenna or transmitter.

Warranty Information

Radios from Trango Broadband Wireless are warranted from one year from date of purchase. Please see www.trangobroadband.com for complete description of warranty coverage and limitations

Welcome!

Your Trango Broadband Access5830 radio system provides the latest innovations in high speed fixed wireless broadband. The Access 5830 is a point-to-multipoint (PMP) system which provides network connectivity at speeds up to 10 Mbps with a range of 10 miles or beyond depending on antenna configuration. The Access5830 is unique in that it can operate in either the 5.8 GHz ISM band or the 5.3 GHz U-NII band.

The Access5830 system consists of two types of radios: Access Points (AP) and Subscriber Units (SU). The AP will deliver wireless broadband service to one or more SU's according to a proprietary polling algorithm called SMARTPolling™. Each AP can associate with and deliver service to up to 512 SU's. With careful channel planning, (and adequate spacing and shielding) network operators can co-locate up to 22 AP's at a single cell site.

The AP and SU conform to maximum radiated power limits as established by the FCC.

Band	AP Max EIRP	Approximate max range (AP to SU)
5.8 GHz ISM Band	36 dBm	6 Miles (allowing for 10 dB fade margin)
5.3 GHz U-NII Band	30 dBm	2 Miles (allowing for 10 dB fade margin)

In this document and within the radio configuration itself, the designators of "ISM" and "U-NII" are used to distinguish between the two bands.

Getting to Know Your Radio

Contents

Each Access 5830 radio comes equipped with the radio itself, a power-over-Ethernet (POE) J-Box, an AC adapter, and mounting hardware. The Access5830 AP (part # M5830S-AP-60) also comes with a serial programming cable. Dual-polarized internal antennas are included within the radome of the AP and the short range SU (Part #M5830S-SU).

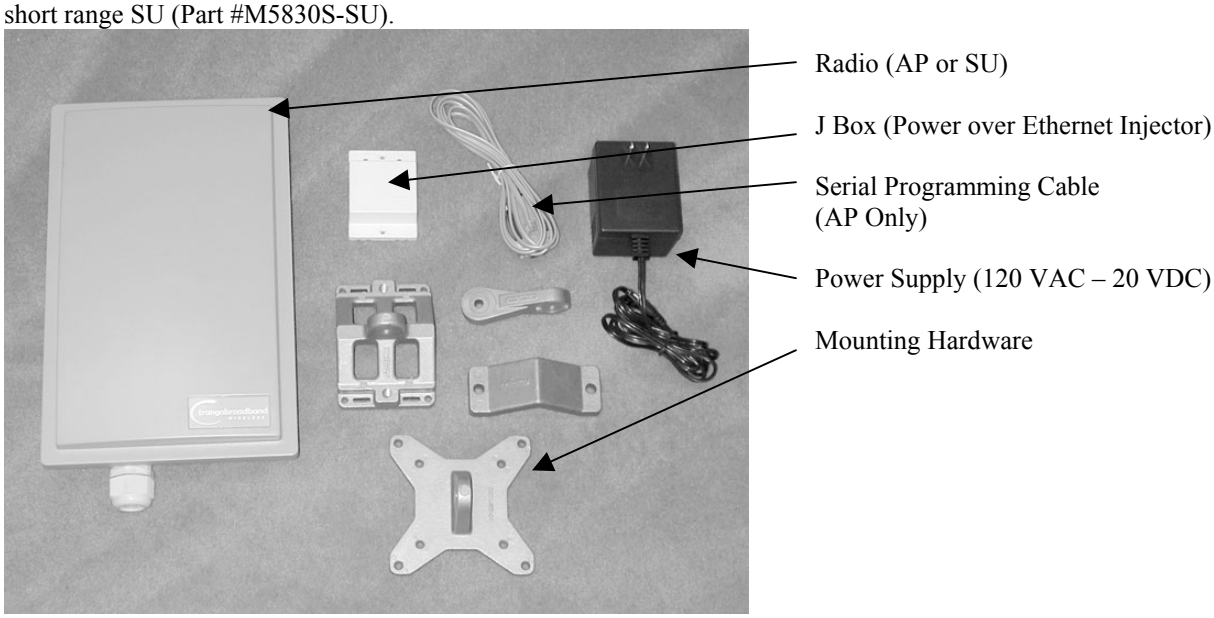

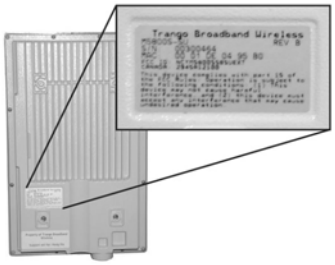

APs and SUs look identical. The only way to tell them apart is by the model number printed on the backside product label. This label also contains the MAC ID of the radio as well as the serial #.

Ethernet and Serial Ports

At the bottom of the Access5830 are two access ports: a twist-on weatherproof cable port for RJ-45 Ethernet (and POE), and an access cover (with two screws) for RJ-11 serial port. Most configuration and management tasks can be performed through the Ethernet jack. The access cover also contains a small window which reveals three LEDs. These LEDs provide RF link-status information and will be discussed later in this text.

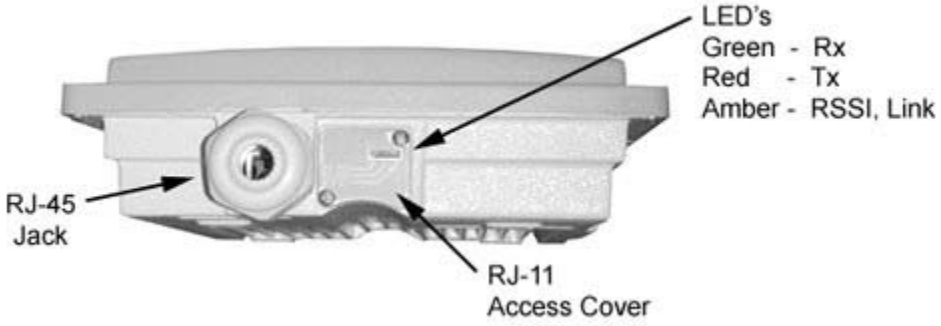

Antennas

The Access5830 AP and SU each include dual polarized patch antennas built in behind the plastic radome cover. These antennas can be electronically switched between horizontal (H) or vertical (V) polarization.

AP/SU Operational Overview

The Access5830 AP is a sophisticated broadband wireless device that provides a host of comprehensive tools and functions. The AP resides at the center of the point-to-multipoint (PMP) network and performs all management functions including the allocation of bandwidth allocation for all associated SU's. As such, we refer to The Access5830 is an "AP-Centric" system.

One of the major advantages of the Access5830 system is the ability of the AP to handle multiple SU connections and share the 10 Mbps data throughput very efficiently. Bandwidth allocation is managed by the AP's SMARTPolling algorithm according to provisioning rules set up by the system administrator.

The AP unit acts as a hub in a star configuration wireless multipoint network supporting up to 512 subscriber units. The AP unit, hardwired to a network point of presence, polls each subscriber unit SU in a round robin format to determine if the SU has data to transfer. The SU only transmits the data "upstream" to the AP when the AP gives authorization via a "transmit grant". The SU parses every "downstream" data packet from the AP and identifies packets intended for it.

In order for an SU to communicate with an AP, the system administrator must first add the MAC address and ID number of the SU to the user database in the AP.

When power is first applied to a properly installed SU, it will scan all the channels in its scantable, searching for an AP that is sending transmit grants for this particular SU. The SU will then stop on that channel and respond to the AP using maximum RF power. Before the AP can add the SU to the polling list, it must authenticate the SU by verifying the MAC address, and performing a ranging operation to the SU. This process involves sending a special command to the SU and getting an instantaneous reply from the SU.

Upon successfully locating and ranging the SU, The AP will then add the SU to the normal polling list and level the RF transmit power level from the SU to set a good signal-to-noise ratio at the AP.

The AP uses several parameters to determine how often each SU is polled for data, and the conditions of any data transfer, as follows:

1) Committed Information Rate (CIR)
2) Maximum Information Rate (MIR)
3) Priority
4) Poll response timeout

All the above parameters are set in the AP by the system administrator and cannot be controlled at the SU. It should also be noted that the MAC table located in the AP is dynamic and stores up to 2000 entries. There is no limitation on the number of IP addresses or hardware devices that an individual SU may have physically connected to it.

Getting Started

First unpack your AP and at least one SU. It is recommended that novice users first provision and test the radios on the bench before deploying in the field.

Connections and Power

Note: Connection and powering of radios is the same for AP's and SU's.

- Connect a Cat-5 (straight through) Ethernet cable (we recommend shielded twisted pair) between the ODU (out door unit) port of the J-box and the RJ-45 connector on the radio. Note that this cable will carry power over Ethernet (PoE). See appendix for PoE pinout diagram for this J-Box to radio connection.

- If connecting to a COMPUTER, use a Cross-Over Ethernet cable from the NET port of the J-box to the computer's Ethernet port.

  If connecting to a HUB, SWITCH, or ROUTER, use a Straight-Thru cable.

- Plug the AC adapter into an AC outlet.

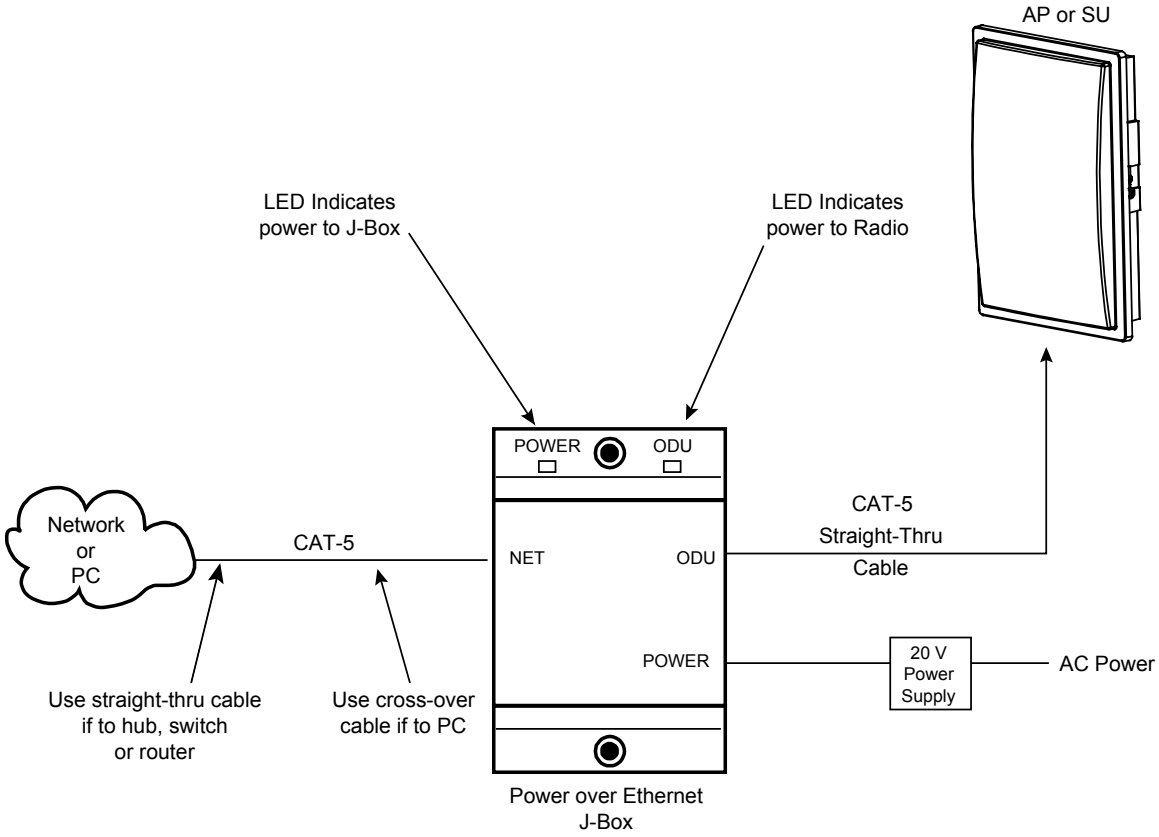

Both green LED's on the J-box should be lit, indicating power is present at the J-box as well as the radio. You are now ready to configure the radio via the Ethernet port.

Note: If you cannot access the radio management functions via the Ethernet port, use the Serial Programming cable (supplied with AP) and attach to RJ-11 located behind access cover on bottom of radio.

Basic Configuration

The Access5830 can be configured using either the Command Line Interface (CLI) or the Web Browser (HTTP) interface. Although both methods are comprehensive and powerful, the CLI method provides slightly more functionality. Regardless of which method is chosen, it is important to gain a good understanding of the major CLI commands available. The entire CLI Command Set Reference is available in a separate document. This user manual focuses on the CLI for radio configuration and management.

The CLI is accessible via telnet session (through Ethernet port) or via the serial port using Hyper-terminal.

If you would like to use the Hyperterminal via PC serial port, use settings 8-N-1 Flow control: None.

Opmode Concept

Before logging on to a radio, it is important to understand the "opmode" concept of the Access5830. AP's can be in one of two opmodes; "OFF" opmode, or "AP" opmode. When in "OFF" opmode the radio is not radiating RF energy, and it is not attempting to associate with SU's. "AP" opmode is the normal operating mode of the AP which is used when radiating RF energy and associating with SU's.

Similarly, SU's have two opmodes: "SU" opmode or "OFF" opmode.

Opmode is important to understand for the following reason:

You can log onto an AP via Ethernet port (telnet or http browser) regardless of Opmode. However, you can only log onto an SU (via the Ethernet port) when it is in Opmode "OFF". Factory default opmode is "SU", however, while booting, the SU will wait 30 seconds before entering opmode "SU". During this 30 second window, you can log onto the SU while it is in opmode "OFF". Once you log onto the SU, the progression to opmode "SU" will stop, and the unit will remain in opmode "OFF". If accessing the SU via the serial programming cable, you can log onto the unit weather it is in opmode "OFF" or opmode "SU".

Also, certain commands, such as the site survey command (***ssurvey***) and the SU RSSI command (***ssrssi***) can only be performed while the radio is in opmode "OFF". See Appendix 1 Command Set Reference l for a complete listing of commands, and the appropriate opmode(s) for each command.

HTTP Browser Interface

The HTTP browser interface is an easy-to-use configuration and management tool. In order to use the browser interface – simply connect the radio to a PC, and type the radio's IP address into the web browser (i.e. Microsoft Internet Explorer). This will bring up a logon screen.

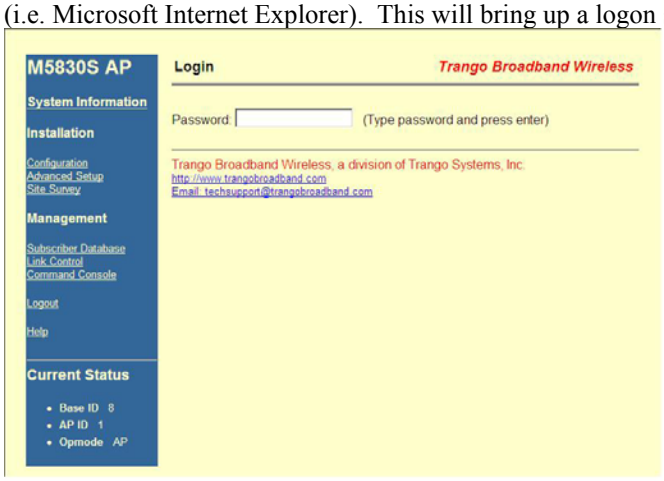

Type the password (default **trango**) and continue. This will bring up a screen similar to the following:

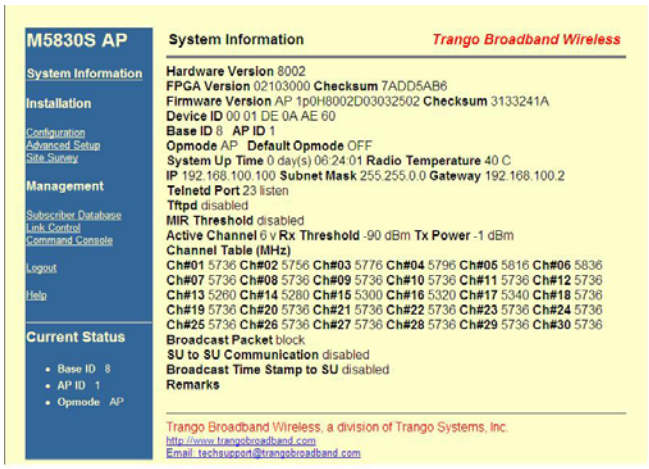

For more information on the HTTP browser interface, please see Appendix 3, or refer to the online HELP button on the browser screen.

Logging On to your Radio via Telnet.

Open a command prompt (DOS) session on your PC. Open a Telnet session by typing

telnet [ip address of radio]

You will be greeted with current hardware and firmware information and prompted for a password. Type in the password and press enter.

All Trango radios (AP and SU) come factory pre-configured with a default IP address 192.168.100.100. The default password is *trango.*

Prior to deployment you will want to change the password and assign a unique IP address to each radio.

Access Point Set Up and Configuration

It is recommended to set up the AP prior to setting up the SU's.
In the process of configuring the AP, you will:

1. Review and modify basic system information such as Base ID, RF Channel, etc.
2. Add SU's to the Subscriber Unit Database (SUDB).

Logon to the AP and to receive a comprehensive snapshot of the system's status, type the command ***sysinfo***. The result appear similar to:

```
#> sysinfo
[Hardware Version] 8002
[FPGA Version] 02103000 [Checksum] 7ADD5AB6
[Firmware Version] AP 1p0H8002D03032502 [Checksum] 3133241A
[Device ID] 00 01 DE 0A AE 60 [Base ID] 8 [AP ID] 1
[System Up Time] 0 day(s) 01:04:50
[Radio Temperature] 39 C
[Opmode] ap [Default Opmode] off
[IP] 192.168.100.100 [Subnet Mask] 255.255.0.0 [Gateway] 192.168.100.2
[Httpd Port] 80 [Httpd Status] listen
[Telnetd Port] 23 [Telnetd Status] connected (192.168.100.200,3043)
[Tftpd] disabled
[MIR Threshold] off [MIR Threshold Kbps]  6144
[Active Channel] 6 v 5836 MHz
[RF Rx Threshold] -90 dBm
[RF Tx Power] -1 dBm
Channel Table: (MHz)
[Ch#01] 5736 [Ch#02] 5756 [Ch#03] 5776 [Ch#04] 5796 [Ch#05] 5816 [Ch#06] 5836
[Ch#07] 5736 [Ch#08] 5736 [Ch#09] 5736 [Ch#10] 5736 [Ch#11] 5736 [Ch#12] 5736
[Ch#13] 5260 [Ch#14] 5280 [Ch#15] 5300 [Ch#16] 5320 [Ch#17] 5340 [Ch#18] 5736
[Ch#19] 5736 [Ch#20] 5736 [Ch#21] 5736 [Ch#22] 5736 [Ch#23] 5736 [Ch#24] 5736
[Ch#25] 5736 [Ch#26] 5736 [Ch#27] 5736 [Ch#28] 5736 [Ch#29] 5736 [Ch#30] 5736

[Broadcast Packet] block
[Remarks]
Success.
#>
```

Many of these parameters can be changed by the user. A description of each of these changeable parameters, along with the related command is shown in the table below. Please note that in order to save any changes to persistent storage, you must type the command: ***updateflash systemsetting***. If you do not update the flash, settings will be reset after reboot.

AP SYSINFO PARAMETERS AND RELATED COMMANDS		
Parameter	**Description**	**Related CLI Command**
Device ID	Mac ID of AP	N/A
Base ID	Specifies the cell or cluster that the AP belongs to. Base ID is one of three key pieces of information, along with active channel, and subscriber database information for the link establishment between the AP and SU's	***set baseid <baseid>***

AP SYSINFO PARAMETERS AND RELATED COMMANDS		
Parameter	**Description**	**Related CLI Command**
AP ID	Informational parameter used to provide a unique number for each AP, useful for AP sector planning. Please note that AP ID is not used by the system for SU authentication.	***set apid <apid>***
Opmode	Current Opmode of radio	***opmode ap*** to change the opmode from OFF to AP. Note: in order to change radio from opmode AP to opmode OFF, you must change the default opmode to OFF reboot the radio.
Default opmode	Determines the opmode ("AP" or "OFF") of the radio after reboot/power cycle. When the parameter is set to "AP", the radio will progress into "AP" opmode automatically after reboot/power cycle.	***set defaultopmode <ap*** or ***off>***
Opmode Start	Determines the amount of time the radio will remain in opmode OFF after reboot before progressing to the default opmode.	***set default opmode <time (secs)>***
[IP] [Subnet] [gateway]	IP, Subnet, and Gateway address of radio	***ipconfig [<new ip> <new subnet mask> <new gateway>]"***
Tftpd status	Tftpd status (on or off).). Tftpd should be turned on to import file into radio (such as new firmware). Default is off.	***tftpd on*** ***tftpd off***
Service Radius	User specified estimate of the distance of the furthest SU this AP will serve. Based on this information, the AP will determine the maximum wait time for an SU to respond to a poll before it starts to poll the next one. **Note**: This parameter has NO effect on the actual coverage radius of the radio.	**set serviceradius [ism|unii><miles>]**
MIR Threshold (or or off)	Enable/Disable the Maximum Information Rate (MIR) threshold.	***set mir [on|off]***
MIR Threshold kbps	User specified MIR threshold to determine total throughput level at which AP serves only CIR (committed information rate) to associated SU's. When MIR Threshold is disabled, the AP will serve MIR for all its SU's. When MIR Threshold is	***Set mir threshold <kbps>***

AP SYSINFO PARAMETERS AND RELATED COMMANDS		
Parameter	**Description**	**Related CLI Command**
	activated, and the network traffic exceeds the MIR threshold, the AP will only serve CIR for all its SU's. When MIR Threshold is activated, and the network traffic does NOT exceed the MIR threshold, the AP will still serve MIR for all its SU's.	
Active Channel	Current RF channel and polarization (v)ertical or (h)orizontal.	***Freq writescan <ch#><v|h>***
RF Rx Threshold	Specifies the receiver sensitivity of the AP. It is a powerful tool when the radio is in a noisy environment. AP will block out any signal received which is below the RF Rx threshold. **Separate settings exist for bot ISM and UNII bands.**	***rfrxth <ism|unii><-90|-85|-80|-75|-70|-65>*** `example: rfrxth ism -70`
RF Tx Power	Current transmit power of the AP not including antenna gain.	***Power <setism|senunii> <min|max|<dBm>>*** `Example: power setism 10`
Channel Table	Lists each of the assigned frequencies to each channel. **Note that default channels 1-6 are assigned to ISM band and channels 7-11 are assigned to U-NII band. All channels may be re-assigned as desired by the user.**	***Freq writechannel [<ch#><freq>]***
Broadcast Packet	This switch (0) enables/disables the blocking of Ethernet control packet except ICMP and ARP to reduce the amount of unnecessary overhead introduced to the wireless link	***Sw 0 [on|off]*** (default is on)
Remarks	User definable radio information (i.e. customer name, address of installation, and so on). Maximum 28 characters can be stored.	***Remarks [remarks]***

AP Subscriber Unit Database

Once you are familiar with the AP's basic system information presented above, it is time to add one or more SU's to the SU database (sudb). There are three basic commands related to the SU database: ***sudb add***, ***sudb view, and updateflash sudb***.

To add an SU to the sudb database, you will need to know the following information:

1. SU ID (an integer which uniquely identifies the SU within this AP's SU database)
2. MAC ID of SU (printed on the back of the SU)

3. Polling priority; either PRIORITY or REGULAR. Note SU's designated as PRIORITY will get polled more often by the AP.
4. CIR (Committed Information Rate – or minimum bandwidth this SU will be delivered from the AP.
5. MIR (Maximum Information Rate – or maximum bandwidth this SU will be delivered from the AP.

To add and SU to the SUDB database, use the following command and syntax:

sudb add <suid>[pr|reg]<cir><mir><device id>

<suid>: SU identification (1~8190)
pr: priority user
reg: regular user
<cir>: confirmed information rate (0~9999)
<mir>: maximum information rate (0~9999)
<device id>: xx xx xx xx xx xx in hexadecimal

Example: ***sudb add 4 pr 9999 9999 f3 3c 50 67 89 d4***

Add up to 2000 entries in the SU database. It is recommended that users not enter any more SU's than necessary since excessive numbers of inactive SU's in the database will negatively impact system performance.

To view the entries in the SU database, type the command ***sudb view***.

Other important SU database related commands are ***sudb delete and sudb modify***. See Appendix 1 for detailed descriptions of these commands.

Important! After updating the SU database, type the command ***updateflash sudb*** to save the SU database. If you do not update flash, the sudb file will revert back to its previous state after power cycle or reboot.

Subscriber Unit Set Up and Configuration

In the process of configuring an SU, you will:

1. Review and modify basic system information such as Base ID, RF Channel, etc.
2. Add SU's to the Subscriber Unit Database (SUDB).

SU System Information

Logon to the SU (while it is in opmode "OFF") and to receive a comprehensive snapshot of the system's configuration info and status, type the command ***sysinfo***.

```
#> sysinfo
[Hardware Version] 0002
[FPGA Version] 02103000 [Checksum] 7ADD5AB6
[Firmware Version] SU 1p0H0002D03032502 [Checksum] 6F7B2399
[Device ID] 00 01 DE 01 AD B1 [Base ID] 8 [AP ID] 1 [SU ID] 15
[System Up Time] 0 day(s) 00:42:23
[Radio Temperature] 41 C
[Opmode] su [Default Opmode] su [Opmode Start] 30 sec
[IP] 192.168.100.101 [Subnet Mask] 255.255.255.0 [Gateway] 192.168.100.101
[Httpd Port] 80 [Httpd Status] listen
[Telnetd Port] 23 [Telnetd Status] connected (192.168.100.200,3044)
[Tftpd] disabled
[RF Tx Power] 6 dBm
Channel Table: (MHz)
[Ch#01] 5736 [Ch#02] 5756 [Ch#03] 5776 [Ch#04] 5796 [Ch#05] 5816 [Ch#06] 5836
[Ch#07] 5736 [Ch#08] 5736 [Ch#09] 5736 [Ch#10] 5736 [Ch#11] 5736 [Ch#12] 5736
[Ch#13] 5260 [Ch#14] 5280 [Ch#15] 5300 [Ch#16] 5320 [Ch#17] 5340 [Ch#18] 5736
[Ch#19] 5736 [Ch#20] 5736 [Ch#21] 5736 [Ch#22] 5736 [Ch#23] 5736 [Ch#24] 5736
[Ch#25] 5736 [Ch#26] 5736 [Ch#27] 5736 [Ch#28] 5736 [Ch#29] 5736 [Ch#30] 5736

[Channel Scan Sequence] 6 v
[Active Channel] 6 v
[Broadcast Packet] block [Auto Scan AP] on [TCP/IP for AP] on
[Remarks]
Success.
#>
```

Many of these parameters can be changed by the user. A description of each of these parameters, along with related commands are shown in the table below. Please note that in order to save any changes to persistent storage, you must type the command: ***updateflash systemsetting***. If you do not update the flash, settings will be reset after reboot.

SU SYSINFO PARAMETERS AND RELATED COMMANDS		
Parameter	**Description**	**Related CLI Command**
Device ID	Mac ID of AP	N/A
Base ID	Specifies the cell or cluster that of the associated AP.	***set baseid <baseid>***
AP ID	Informational parameter used to provide a unique number for the SU's associated AP. Please note that AP ID is not used by the system for SU authentication.	***set apid <apid>***
Opmode	Current Opmode of radio	***opmode su*** to change the opmode from OFF to SU.
Default opmode	Determines the opmode ("SU" or "OFF") of the radio after reboot/power cycle. When the parameter is set to "SU", the radio will progress into "SU" opmode automatically after reboot/power cycle.	***set defaultopmode <su*** or ***off>***

SU SYSINFO PARAMETERS AND RELATED COMMANDS		
Parameter	**Description**	**Related CLI Command**
Opmode Start	Determines the amount of time the radio will remain in opmode OFF after reboot before progressing to the default opmode.	***set default opmode <time (secs)>***
[IP] [Subnet] [gateway]	IP, Subnet, and Gateway address of radio	***ipconfig [<new ip> <new subnet mask> <new gateway>]"***
Tftpd	Tftpd status (on or off). Tftpd should be turned on to import file into radio (such as new firmware). Default is off.	***tftpd on tftpd off***
Active Channel	Current RF channel and polarization (v)ertical or (h)orizontal.	***Freq writescan <ch#><v|h>***
RF Tx Power	Current transmit power of the SU not including antenna gain. This setting will be overwritten during the su powerleveling process.	***Power <setism|senunii> <min|max|<dBm>>***
Channel Table	Lists each of the assigned frequencies to each channel.	***freq writechannel [<ch #> freq>]…****
Channel Scan Sequence	Shows the various channels (in sequence) which the SU will scan while search for an AP.	***Freq writescan [<ch #> <h|v>…*** <ch #>=1..30
Broadcast Packet	This switch (switch 0) enables/disables the blocking of Ethernet control packet except ICMP and ARP to reduce the amount of unnecessary overhead introduced to the wireless link.	***Sw 0 [on|off]*** (default is on)
AP Autoscan	This switch (switch 1) is to turn AP autoscan on or off.	Sw 1 [on|off] ***(default is on)***
TCP/IP for AP	This switch (switch 2) when on, allows users at the AP side of the network to telnet or http into the SU.	Sw 2 [on|off] ***(default is off)***
Remarks	User definable radio information (i.e. customer name, address of installation, and so on). Maximum 28 characters can be stored.	***Remarks [remarks]***

Establishing a Wireless Link

Once an SU is added to the SU database, you are ready to establish a wireless link. In order to establish a wireless link, the following parameters must be true.

1. Base ID in AP and SU must match.
2. SU ID and MAC ID in AP's SU database and SU must match.
3. AP's RF Channel and Polarization must exist in the SU's channel scan table.
4. AP must be in opmode "AP".
5. SU must be in opmode "SU".
6. Adequate signal strength received at each radio.

If all of these parameters are met, and if the AP and SU are within range - and properly aligned, the wireless link will automatically establish itself and Ethernet traffic will begin to pass between the radios.

To ensure each of these parameters is met, perform the following steps, or use default settings:

Access Point

1. Telnet into radio.
2. Set Base ID (or use default 1) (***set baseid X)***
3. Set IP, subnet, and gateway ***(ipconfig IP address subnet gateway)***
4. Set channel and polarization ***(freqwritescan ch pol)***
5. Set default opmode to AP **(*set defaultopmode AP*)**
6. Set opmode to AP ***(opmode AP)***
7. Set the AP's power to an acceptable level. For bench testing it is recommended to use the lowest power setting, -8 dBm. ***(power set –8)***
8. Update system setting flash memory (***updateflash systemsetting)***
9. Add SU to SU database (***sudb add ……..)***
10. Update SU database flash memory (***updateflash sudb***)
11. Verify all system settings by typing ***sysinfo*** *and* ***sudb view***.

At this point the AP will begin actively searching for any SU in its SU database. Once an active SU is detected, the authentication and association process will begin. The RED LED on the bottom of the AP should be lit, indicating that the radio is in opmode "AP" and is radiating RF energy.

Subscriber Unit

1. Telnet into radio (must be while opmode is "OFF").
2. Set Base ID (or use default 1) (***set baseid X)***
3. Set SU ID (***set suid X***)
4. Set IP, subnet, and gateway ***(ipconfig ip, subnet, gateway)***
5. Set channel and polarization ***(freqwritescan X X)***
6. Set default opmode to SU **(*set defaultopmode SU*)**
7. Update system setting flash memory (***updateflash systemsetting)***
8. Verify all system settings by typing ***sysinfo***.
9. Reboot radio to activate the default opmode "SU" (***reboot)***. Note: this command will automatically terminate your Telnet session.

At this point the SU will reboot itself and proceed into its "SU" opmode. If the two radios are generally aligned, authentication and SU association will occur.

Association Concept (AP to SU communications)

The Access5830 uses the concept of "association" to indicate that AP's and SU's are communicating.

The amber light on the bottom of the SU should be lit, either steadily, or blinking, to indicate that the AP and SU have successfully associated. A steady light indicates strong signal strength. A blinking light indicates less signal strength. If no amber light appears, then the AP and SU are not associated

Basic Diagnostics

In establishing the link between AP and SU(s), there are a few commands which are especially useful. All of these commands are performed at the AP. A summary of these commands follows:

su - Displays the status of all SU's in the AP's. SU's in the SU database will appear by SU ID, classified into one of the following status categories: Associated, Associating, and OFF.

su live - Displays a list of SU's that are currently associating with the AP (by SU ID).

su ping <su#> - AP will sends 10 RF pings to the designated SU ID. The response from each ping will indicate the strength (RSSI) of the signal received back from the SU for each of the 10 pings. Note this command will also tell you the distance from the AP to the SU.

Example:

```
#> su ping 15
[#Begin]
[0015]
Ping #0 -> 291 us [-62 dB]
Ping #1 -> 287 us [-62 dB]
Ping #2 -> 288 us [-63 dB]
Ping #3 -> 288 us [-63 dB]
Ping #4 -> 289 us [-60 dB]
Ping #5 -> 285 us [-60 dB]
Ping #6 -> 289 us [-62 dB]
Ping #7 -> 288 us [-62 dB]
Ping #8 -> 289 us [-62 dB]
Ping #9 -> 287 us [-62 dB]
suid 15: range[avg/min/max 287/285/291 us] max rssi[-60 dBm] distance[0.0 mi]
[#End]
Success.
#>
```

su status <su #> AP will poll the SU for SU's current status and will provide information such as SU range from AP, signal strength received at SU from AP, SU temperature, etc. .

Example:

```
#> su status 15
[#Begin]
[suid] 15
[tm] 2458199
[rf rx] 0 KB
[rf tx] 0 KB
[eth rx] 0 KB
[eth tx] 0 KB
[rssi] -69
[tx power] 6
[temp] 41
[#End]

Success.
#>
```

su testrflink <su#> This command is to check the integrity of the wireless link from the standpoint of packet loss. AP will send 20 large packets to the SU and the SU will in turn send the same 20 packets back to the AP. The expected result of an error free link is 20..20..20, indicating (in the following sequence) 20 packets sent from AP, 20 packets received back at AP, 20 packets received at SU. Any results other than 20..20..20 indicate lost packets, most likely due to interference or inadequate signal to noise ratio.

The "r" is used in this command to repeat the rf link test repeatedly until the user terminates the test by hitting SPACE ENTER.

Example:

```
#> su testrflink 15 r

Press [space] then [enter] to stop
[len] 1512
[suid] 15
[   0] ...........[AP Tx] 20 [AP Rx] 20 [SU Rx] 20
[   1] ...........[AP Tx] 20 [AP Rx] 20 [SU Rx] 20
[   2] ...........[AP Tx] 20 [AP Rx] 20 [SU Rx] 20
[   3] ...........[AP Tx] 20 [AP Rx] 20 [SU Rx] 20
[   4] ...........[AP Tx] 20 [AP Rx] 20 [SU Rx] 20
[   5] ...........[AP Tx] 20 [AP Rx] 20 [SU Rx] 20
[   6] ...........[AP Tx] 20 [AP Rx] 20 [SU Rx] 20
[   7] ...........[AP Tx] 20 [AP Rx] 20 [SU Rx] 20
[   8] ...........[AP Tx] 20 [AP Rx] 20 [SU Rx] 20
[   9] ...........[AP Tx] 20 [AP Rx] 20 [SU Rx] 20
[  10] ...........[AP Tx] 20 [AP Rx] 20 [SU Rx] 20

Success.
#>
```

As another example, a result of 20..10..18 would indicate 20 packets sent from AP, 18 packets received at SU, 10 packets received back at the AP.

For thorough results it is recommended you run the command repeatedly for at least 1 minute or more to determine if packets are passing without error consistently over time.

Deployment

Once you are familiar with the basic operation of the radios you are ready for deployment in the field. The deployment process consists of the following steps:

- Site Selection
- Site Survey at AP and SU sites.
- Channel planning
- AP installation
- SU installation and antenna alignment
- Link test

Site Selection

Proper site selection for your AP will help ensure a successful deployment. Site selection will depend on a wide variety of factors, but from the radio's performance standpoint, please consider the following:

- Path from AP to SU should provide unobstructed line-of-sight, thus it is advisable to place AP as high as possible on a tall building or tower.
- Ethernet cable limit is 100 M from Ethernet device (router, switch) to radio.
- Radios require grounding for optimal performance
- AP provides sector coverage of 60 degrees.
- Consider nearby sources of interference that could degrade performance of radio. Mount radios as far from sources of interference as possible.

Site Survey

Both the AP and SU provide a powerful on-board site survey tool. This tool will tell you if there is interference present in the 5.8 GHz or 5.3 GHz band.

The survey command is accessible from the Telnet command line in both the AP and SU. In order to use the survey command, the radio must be in opmode "OFF". The survey can be performed for any specified amount of time (in seconds) and for either the horizontal or vertical polarization.

Prior to performing the site survey, place the radio in the installation spot, and aim the radio in the desired direction.

An example of the site survey command is as follows:

ssurvey 30 h

This command will perform the site survey for 30 seconds for the horizontal polarization.
After the specified period, the results of this command will provide you with a listing of each frequency within the band (in 2 Mhz increments), the average signal received, and the maximum signal received during the survey period.

In general you will be looking for frequencies with signal strength of –85 dBm or lower. If interference is present on various channels, it is recommended that you chose clean channels or alternate polarizations for your deployment. If it is not possible to use a clean channel/polarization combination, there are various methods available to mitigate the affects of interference. These methods include the use of the RFRX THRESHOLD settings, or the use of external shields on the AP

Channel Planning

For installations involving co-location of APs, channel planning is of paramount importance. For maximum AP co-location quantities, it is important to assign frequencies of maximum spacing and alternating polarizations for adjacent APs. Use of the 5.3 spectrum as well as the 5.8 spectrum will allow maximum co-location potential. For very dense deployments of multiple APs, it may be necessary to use the optional AP Shielding kit in order to mitigate interference from nearby APs.

Various AP channel plans can be implemented and many of the factors will depend on the unique circumstances at each particular site. See www.trangobroadband.com for additional information on channel planning schemes.

Installation

Mounting Hardware
Once the site survey is completed, you are ready to install your radios. It is recommended that AP's be installed first. The reason for this is that the SU has a built-in RSSI tool that will help you properly aim the SU at the AP to achieve maximum signal strength.

Both AP's and SU's are equipped with a universal mounting bracket that can be used for wall or pole installations. See diagram below from proper use of the mounting bracket.

Mounting of the Access5830 AP and SU

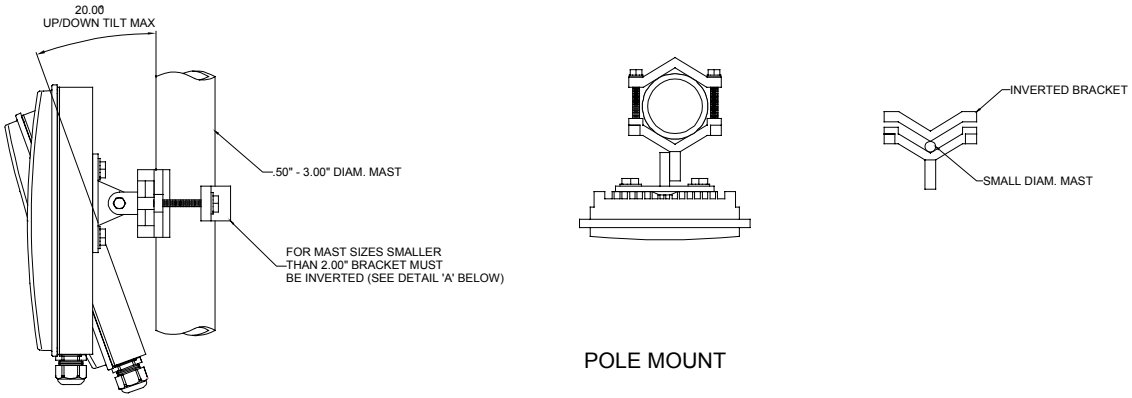

POLE MOUNT

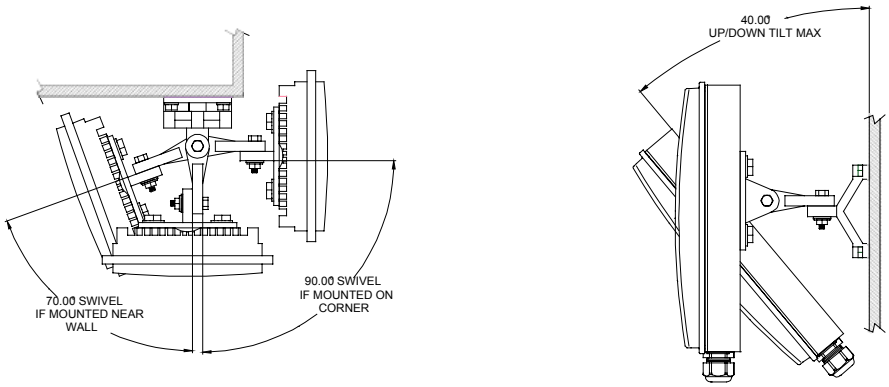

WALL MOUNT

Grounding
Proper mounting of the radio includes consideration for grounding. Please note that if the radio is attached to a metal pole which is earth-grounded, no other grounding is necessary. If the radio is not earth-grounded via the mounting bracket, you must attach a grounding wire to the grounding stud on the back of the radio as per the adjacent diagram.

Cabling and Weather Considerations
Shielded twisted pair Cat-5 cable is recommended for all installations. The shield within the Cat-5 cable does not need to be grounded if the radio itself is grounded. It is important consider that most Cat-5 cable will deteriorate over time if exposed to the weather (especially direct sunlight). It is recommended that installers place all Cat-5 cables inside conduit. Plastic or conduit is sufficient. If metal conduit is used, it is not necessary to use shielded Cat-5 cable.

It is imperative that the radio be COMPLETELY SEALED at the both the Ethernet port as well as the Serial Port access cover. The contracting weather-proofing clamp at the bottom of the Ethernet port must be securely tightened around the cable if conduit is not used. Proper sealing of the radio will ensure that moisture will not enter the enclosure of the radio. **Without proper sealing, moisture may enter the radio and potentially cause damage which will not be covered under warranty.**

The cable ports are purposely located at the bottom of the radio to minimize the risk of water intrusion. **Do not mount the radios upside down.**

Note: The J-Box is not a weatherized device and must be located either indoors or in a weather-protected cabinet.

SU Installation and Antenna Alignment

Once the AP is installed, and aligned in the correct general direction, it is time to install the SU. The hardware installation of the SU is identical to the AP, including considerations for line-of-site, cable distances, cable type, weather sealing, and grounding.

Once the SU is installed and aimed in the general direction of the AP, it is time to perform an RSSI test to determine the signal strength from the AP, and to precisely align the SU antenna for maximum signal strength.

SU Antenna Alignment Procedure

1. Ensure AP is in opmode AP
2. Telnet into the SU (while in opmode "OFF") or access the radio via hyperterminal/serial port.
3. Type command ***RSSI <channel> <polarization>*** - Example ***RSSI 3 V*** (chan. 3, vertical polarization)
4. Telnet session screen will begin a continuous readout of the received signal strength.
5. As you read the RSSI reading, move the antenna in the horizontal and vertical planes until the maximum RSSI reading is achieved. For short links you can expect an RSSI of –60 dBm or better. For longer links and RSSI of –75 dBm is acceptable. Any RSSI of less than –80 dBm may be too weak for the radios to reliably associate and pass data.

6. If it is not possible to receive an adequate RSSI reading, it may be necessary to reorient the AP (up/down, left/right), to increase the output power of the AP, or to move the SU to a location with better line-of-sight conditions to the AP.

Once you are satisfied with the RSSI reading, tighten down the SU in the optimum position. To stop the RSSI continuous readout, hit SPACE ENTER.

Note: The amber light on the bottom of the SU will also indicate RSSI according to the following parameters:

RSSI ≤ -80dBm	not lit
RSSI > -80dBm	blinking.
RSSI ≥ -65dBm	solid. (blink rate increases with signal strength.)

Link Test

Ensure the SU's default opmode is "SU" and that all configuration parameters are correct.

Reboot the radio. Once the radio enters opmode "SU", the authentication process will occur with the AP, and the two radios will begin to associate. From the AP side, use the basic diagnostics commands such as ***su ping, su status, and su testrflink*** to ensure that a reliable RF link has been established. It may take one minute or more for the association process to complete. This process may take longer if there are many SU's in the sector.

If all tests show favorable results, the wireless link will automatically begin passing Ethernet traffic between the radios.

Managing your Access5830 Network

Network Setup

The Access5830 is an "AP"centric system, meaning that the AP controls most functions of its associated SU's. For this reason it is important to consider that you will manage your Access5830 system management primarily through the AP.

Network management can be performed by three methods

- Command Line Interface
- Http interface - See Appendix 2, HTTP Interface
- SNMP Manager - See the Access5830 SNMP Guide for more details.

Command Line Interface

Most management functions of the SU can be performed by issuing commands from the AP. Presented below are a few examples of these commands:

Change SU's password for a single SU or all SU's in sector: ***su password <all|suid> <pwd> <pwd>***
Example: `su password 7 hello hello` : to change the password on SU#7 to "hello"

Change the SU's IP, subnet, and gateway: ***su ipconfig <new ip> <new subnet> <new gateway>***
Example: `su ipconfig 192.168.10.10 255.255.255.0 255.255.0.0`

Broadcast a new channel/scan table to su: ***bcastscant <all|suid><ch #> <h|v>…***
Example: `bcastscant all 5 v 2 h`
In this example, the AP will transmit a new channel scan table (channel 5 vertical, 2 horizontal) to all associated SU's. This command will broadcast the table every second for 60 minutes.. To stop the broadcast sooner, type the command ***bcastscant stop***.

Note: SU commands issued from the AP will automatically update the SU's flash memory.

A complete description of these commands and many others can be found in Appendix 1, Command Line Interface Summary – Command Set Summary.

Telnetting into a remote SU

It is also possible to telnet into an SU from the AP side of the network. In order to telnet into an SU via the AP side of the network, it is necessary to turn on switch 2 (TCP/IP for AP switch) at the SU.

To turn on switch 2 (while logged onto AP)
su sw <su-id|all> 2 on
Example: `su sw 2 all on :` to turn on swich 2 for all associated SU's.

While switch 2 is on, you can also access the SU via HTTP interface (from the AP side of the network.)

Managing AP from SU side of Network

As a security feature, the Access5830 was designed to prevent users on the SU side of the network from accessing the AP via telnet or HTTP interface. If it is necessary for network administrators to access an AP from the SU side of the network the user must first telnet into a router located behind the AP – and then telnet from the router into the AP.

Troublshooting

For a comprehensive guide to troubleshooting, download the Access58XX Troubleshooting Guide from www.trangobroadband.com/techsupport.

Specifications

[add specifications here.]

Appendix 1

Access5830™ Command Line Interface (CLI)

Command Set Summary

Notes:

OPMODE: s - indicates command can be executed via serial port (Hyperterminal)
e - indicates command can be performed via Ethernet (telnet) session.
OFF indicates command can be performed in opmode OFF
AP indicates command can be performed in opmode AP
SU indicates command can be performed in opmode SU

<su-id> = 1..8190
* New / Changed from M5800 series
+ indicates command may not work properly through http's command console.

Command	Description	OPMODE			AP or SU?	Remarks
		OFF	AP	SU		
!+	redo the last command	s	s	s	both	
?	display complete help pages	se	se	se	both	
? <command>	search and display command's help	se	se	se	both	
_password <new password> <new password>	specify new password (max 15 octs)	se	se	se	both	
apsearch <sec> <ch #> <v | h> <ch #> <v | h>….*+	monitor traffic from all APs	se			both	
baud [9600 | 115200]	display or set console baud rate	se	se	se	both	default = 9600 bps
bcastscant <all | suid> <ch#> <h | v> ….	broadcast scan and channel frequency table to single or all SU		se		AP	- up to 31 channel and polarization - it will broadcast packet every

Command	Description	OPMODE			AP or SU?	Remarks
		OFF	AP	SU		
						second for 60 mins
bcastscant stop	stop bcastscant		se		AP	
bcastsuimage <all | suid> <hw ver>*	broadcast 12.8 Kbytes/sec for 15 mins		se		AP	for M5800S SU only
bcastsuimage stop*	stop broadcast				AP	for M5800S SU only
bye*	same as "logout"				both	
date	display current date	se	se	se	both	
date <mm> <dd> <yy>	set current date <mm> = 1..12 <dd> = 1..31 <yy> = 1..99	se	se		AP	
dloadsufw*	display current checksum in broadcast buffer		se		AP	for M5800S SU only
dloadsufw <main | fpga>*	download su main or fpga image from tftp buffer to broadcast buffer		se		AP	for M5800S SU only
echo [<on|off>]	echo input characters in telnet	se	se	se	both	default = on
exit*	same as "logout"				both	
freq	display current channel	se	se	se	Both	
freq <ch#> <h | v>	change current channel and polarization	se	se	se	Both	
freq channeltable	display channel table	se	se	se	Both	
freq scantable	display scan sequence table	se	se	se	Both	
freq writechannel [<ch #> <freq>]…*	build channel and write to flash <ch #> = 1..30, <freq>= 5260-5340, 5736..5836	se	se	se	Both	
freq writescan [<ch #> <h | v>]	set active channel and polarization	se	se	se	AP	
freq writescan [<ch #> <h | v>]…	build scan sequence <ch #> = 1..30	se	se	se	SU	
help	display complete help page except "eng"	se	se	se	Both	
help <command>	search and display command's help	se	se	se	Both	
ipconfig [<new ip> <new subnet mask> <new gateway>]*+	assign radio's ip, subnet mask and gateway ip	se	se	se	Both	
log	display last log entry: 1. time tag (sec) 2. RF receives user payload in Kbytes 3. RF transmits user payload in Kbytes 4. Local Ethernet receives user payload in Kbytes		se	se	Both	one log entry every min

Command	Description	OPMODE			AP or SU?	Remarks
		OFF	AP	SU		
	5. Local Ethernet transmits user payload in Kbytes 6. rssi (SU only) 7. tx power (su only) 8. temp					
log <# of entry, 1..180>	display last log entries		se	se	Both	up to 3 hours
log sum <# of entry, 1..180>	display the sum of last log entries 1. RF receives user payload in Kbytes 2. RF transmits user payload in Kbytes 3. Local Ethernet receives user payload in Kbytes 4. Local Ethernet transmits user payload in Kbytes 5. rssi of latest log entry (su only) 6. tx power of latest log entry (su only) 7. temp of latest log entry		se	se	Both	up to 3 hours
logout	log out console	se	se	se	Both	
opmode	display current opmode	se	se	se	Both	
opmode ap [y]	set opmode to be ap and use "y" if opmode is not as same as default	se			AP	
opmode su [y]	set opmode to be su and use "y" if opmode is not as same as default	se			SU	
password	specify new password (max 15 octs)	s	s	s	Both	
ping <ip address>	ping local Ethernet device	se	se		Both	It only works for local Ethernet devices, not SU or any device behind SU.
power*	display default and current tx power level	se	se	se	Both	default = +22 dBm (ISM) and +17 dBm (UNII)
power <setism|setunii> <min|max|<dBm>>*	specify tx power for both bands	se	se	s	Both	SU's power will be adjusted by AP when associating
reboot	reboot unit	se	se	se	Both	
remarks [<str>]	string length should be 1 to 28 characters	se	se	se	Both	

Command	Description	OPMODE			AP or SU?	Remarks
		OFF	AP	SU		
reset [all | <n1> <n2> ..]*	reset radio to be firmware default for AP: n# = 0..3 for SU: n# = 0..2	se			Both	**AP Defaults:** 0 - BASE ID = 1, AP ID = 1 Subnet Mask = 255.255.255.0 Gateway = radio ip Password = trango 1 - Channel Tables Active Channel = 1 h 2 - Tx Power = Max RF Threshold = -90 dBm Target RSSI = -60 dBm Service Radius = 10mi for ISM 4 mi UNII MIR Threshold = off 3 - SNMP Community String (Read/Write) = (public/private) **SU Defaults:** 0 - BASE ID = 1, AP ID = 1 SU ID = 1 Subnet Mask = 255.255.255.0 Gateway = radio ip Password = trango 1 - Channel Tables Scan Table = 1 h 7 h Active Channel = 1 h 2 - Tx Power = Max RF Threshold = -90 dBm
rfrxth <ism|unii> <-90|-85|-80|-75|-70|-65>*	specify RF rx threshold	se	se	se	Both	default = -90 for both bands
rfrxthreshold …*	same as “rfrxth”				Both	
rssi	display current Rx rssi	se		se	Both	
rssi r +	display Rx rssi continuously	se		se	Both	
save ….*	same as “updateflash”				Both	
set apid <ap-id>	set ap id, <ap-id> = 1..255	se	se	se	Both	

Command	Description	OPMODE			AP or SU?	Remarks
		OFF	AP	SU		
set baseid <base-id>	set base station id, <base-id> = 1..127	se	se	se	Both	
set defaultopmode ap <mins>	set default opmode to be ap, <min> = 0..10	se	se		AP	default opmode is off, 0 = 30 sec
set defaultopmode su <mins>	set default opmode to be su, <min> = 0..10	se		se	SU	default opmode is off, 0 = 30 sec
set gateway [<ip <addr>]*	set or display gateway's ip	se	se		AP	if ip is 0.0.0.0 or 255.255.255.255 then radio will not ping gateway
set httpport [<port #>]	set or display HTTPD port number	se	se	s	Both	default = 80
*set ip <ip address, 4 dec>	set ip address	se	se	se	Both	For M5800 Series only. For M5830 use IPCONFIG.
set mir [on | off]	enable or disable mir threshold	se	se		AP	default = off
set mir threshold <kbps>	set mir threshold, <kbps> = 1000..9999	se	se		AP	default = 6114 kbps (6 Mbps)
set rssitarget <dB>	set Target RSSI threshold It must be in -45 to -75 and +5 dB higher than RF Rx Threshold	se	se		AP	
set serviceradius [<ism|unii> <miles>]*	set or display service range, <miles> = 0 .. 30	se	se		AP	default ISM = 10 miles UNII = 4 miles
set snmpcomm [<read|write>] *	display or assign snmp community string	se	se		AP	
set subnet [<mask>]*	set or display subnet mask	se	se		AP	if ip is 0.0.0.0 or 255.255.255.255 then radio will not ping gateway
set suid <su-id>	specify unit's su-id	se	se	se	SU	need to reboot
set telnetport [<port #>]	specify telnet port, <port #> = 1..65534	se	se	s	Both	default = 23
ssrssi <ch #> <v | h>	display rssi on the current channel	se			Both	
su	display the su info summery		se		AP	
su <suid>	display su payload status		se		AP	
su all	display all registered SU		se		AP	
su delete <suid|all>*	remove an entry or all entries from su database	se	se		AP	
su info <su-id>	display request su's info: 1. H/W version 2. F/W date code 3. FPGA version 4. Image checksum 5. Device ID 6. IP address 7. Scan sequence table 8. packet filter on/off		se		AP	

Command	Description	OPMODE			AP or SU?	Remarks
		OFF	AP	SU		
	9. auto scan ap on/off 10. tcpip for ap on/off 11. httpd on/off 12. remarks					
su ipconfig <new ip> <new subnet> <new gateway>*	assign radio's ip, subnet mask and gateway ip		se		AP	
su live	display all su which are associated		se		AP	
su password <all|suid> <pwd> <pwd>	set su's password remotely		se		AP	
su ping <su-id>	request su's ranging and rssi information		se		AP	
su powerleveling <all | suid> [target –dB]	calibrate su's power leveling		se		AP	
su poweroff	display all su which are in poweroff group		se		AP	
su priority	display all su su which are in priority group		se		AP	
su reboot <su-id>	reboot one su		se		AP	
su reboot all	reboot all associated su		se		AP	
su restart <su-id>	restart one su		se		AP	
su restart all	restart all associated su		se		AP	
su rssi <su-id>	request su's rssi		se		AP	
su status <su-id>	display request su's current status: 1. current time mark 2. RF receives user payload in Kbytes 3. RF transmits user payload in Kbytes 4. Local Ethernet receives user payload in Kbytes 5. Local Ethernet transmits user payload in Kbytes 6. Current RSSI 7. Current RF Tx Power (dBm) 8. Current temp		se		AP	
su sw <su-id|all> <sw #> <on | off>	set su's sw # on or off		se		AP	
su testrflink <suid> [r]	send 20 1512 bytes long packet payload to <suid> and listen r: will repeat until key press		se		AP	
su testrflink all [r]	send 20 1512 bytes long packet to all associated		se		AP	

Command	Description	OPMODE			AP or SU?	Remarks
		OFF	AP	SU		
	su and listen					
su testrflink aptx [<# of pkts, 20..100>]	set or display # of pkts per cycle		se		AP	default = 20
su testrflink setlen [<len in bytes>]	set or display the length of test packet <len> = 64 .. 1600 and must be times X4		se		AP	default len = 1512
sudb add <suid> <pr | reg> <cir> <mir> <device id>	add new entry to su database	se	se		AP	
sudb dload	download and interpret su database file from tftp buffer and write to flash memory	se			AP	
sudb modify <suid> <cir | mir> <kbps>	modify cir or mir setting in one entry	se	se		AP	
sudb modify <suid> <su2su> <group-id, 0..F>	modify group id for su to su communication group 0: disabled group	se	se		AP	
sudb view	display all entries in su database	se	se		AP	
sulog	display last su log 1. time tag (ms) 2. sample period (1..60 mins) 3. RF receives user payload in Kbytes 4. RF transmits user payload in Kbytes 5. Local Ethernet receives user payload in Kbytes 6. Local Ethernet transmits user payload in Kbytes 7. rssi 8. tx power 8. temp		se		AP	default sample period = 10 mins
sulog <# of entry, 1..18>	display last su log entry		se		AP	up to 18 entries (3 hours)
sulog lastmins [<time stamp, sec>]	if <time stamp> < current up time stamp, then display last su log 1. time tag (ms) 2. RF receives user payload in Kbytes 3. RF transmits user payload in Kbytes 4. Local Ethernet receives user payload in Kbytes 5. Local Ethernet transmits user payload in Kbytes		se		AP	

Command	Description	OPMODE			AP or SU?	Remarks
		OFF	AP	SU		
	6. rssi 7. tx power 8. temp else display: [#Begin] [#None] [#End]					
sulog sampleperiod [<1..60>	set or display sulog sample period	se	se		AP	default sample period = 10 mins
survey <sec>	spectrum analysis pf the entire band	se			Both	
sw	display current sw setting	se	se	se	Both	
sw 0 [on | off]	set sw #0 - packet filter for broadcast/multicast	se	se	se	Both	default = on need to update flash
sw 1 [on | off]	set sw #1 – su's scan ap (su only)	se		se	SU	default = on need to update flash
sw 2 [on | off]	set sw #2 – su's TCP/IP service for ap	se		se	SU	default = off need to update flash
sw 3 [on | off]	set sw #3 – su to su (ap only)	se	se		AP	default = off need to update flash
sw 4 [on | off]	set sw #4 – broadcast time stamp to su (ap only)	se	se		AP	default = off need to update flash
sw 5 [on | off]*	httpd enable / disable	se	se	s	Both	default = on need to update flash
sysinfo*	display system configuration	se	se	se	Both	
temp	display current temperature	se	se	se	Both	
time	display current time	se	se	se	Both	
time <hh> <mm> <ss>	set current time <hh> = 0..23 <mm> = 0..59 <ss> = 0..59	se	se		AP	
tm	display current time mark	se	se	se	Both	
uniimaxpower [<dBm>]*	set max tx power limit	s			SU	
updateflash _loader+	get image from tftp buffer and write to flash memory at loader image section	se	se		AP	downgrade AP firmware from 1p5 to 1p41
updateflash <mainimage | fpgaimage> <* | <current checksum>> <* | <new checksum>>	get image from tftp buffer, verify checksum and write to flash memory at main or fpga image section.	se	se	se	Both	

Command	Description	OPMODE			AP or SU?	Remarks
		OFF	AP	SU		
	*: skip checksum verification					
updateflash sudb	write current su database into flash memory at sudb section	se	se		AP	
updateflash systemsetting	write current configuration into flash memory at system configuration section	se	se	se	Both	
ver*	display 1. version number and date code 2. firmware and fpga version code 3. firmware and fpga image checksum	se	se	se	Both	

Appendix 2 – HTTP Browser Interface