MBF-40 Americas

Multi-band Series

User Manual – 00071UM Rev. 4.3

The most important thing we build is trust

Single/Dual-Band Repeater

Tri/Quad-Band Repeater

This document is valid for the following MBF-40 37 dBm models:

Type	Description	Part Number
APAC 700MHz	MBF-40 APAC 700MHz 40dBm 110VAC	MBF-4007A-110V
SPRINT 800&850 /1900MHz	MBF-40 SPRINT 800&850/1900 37dBm 110VAC	MBF-3708-3719-110V
700/1700MHz	MBF-40 7/17 37/39 dBm 110VAC	MBF-3707-3717-110V
700/SPRINT800&850/1700 MHz	MBF-40 700/SPRINT 800&850/17 37/37/39 dBm 110VAC	MBF-3707-3708-3917-110V
700/SPRINT800&850/1900 MHz	MBF-40 700/SPRINT 800&850/1900MHz 37/37/37dBm 110VAC	MBF-3707-3708-3719-110V
SPRINT800&850/1700/ 1900MHz	MBF-40 SPRINT 800&850/17/19 37/39/37 dBm 110VAC	MBF-3708-3917-3719-110V
700/1700/1900MHz	MBF-40 700/1700/1900 37/39/37 dBm 110VAC	MBF-3707-3917-3719-110V
700/SPRINT800&850/1700/ 1900MHz	MBF-40 700/ SPRINT 800&850/1700/1900 37/37/39/37 dBm 110VAC	MBF-3707-3708-3917-3719-110V
1700 MIMO/1900MHz	MBF-40 1700/1700MIMO/1900 39/39/37 dBm 110VAC	MBF-3917-3917M-3719-110V

This document is valid for the following MBF-40 43 dBm models:

Type	Description	Part Number
700MHz (LTE)	MBF-40 700MHz LTE 43dBm 110VAC slave unit	MBF-4307-110V-SL
APAC 700MHz (LTE)	MBF-40 APAC 700MHz LTE - 43dBm 110VAC slave unit	MBF-4307A-110V-SL
700MHz MIMO (LTE)	MBF-40 LTE 700/700 MIMO 43/43dBm 110VAC slave	MBF-4307-4307-M-110V-SL
SMR 700/800 MHz	MBF-40 SMR 700/800MHz 37/37dBm 110VAC, master unit	MBF-3707S-3708S-110V
AWS/1900MHz	MBF-40 AWS/1900MHz 43/43dBm 110VAC,master unit	MBF-4317-4319-110V
AWS/2600MHz	MBF-40 AWS/2600MHz 43/43dBm 110VAC, master unit	MBF-4317-4326-110V
SPRINT800&850/AWS/ 1900/2600	MBF-40 SPRINT800&850/AWS/1900/2600 43/43/43/43 dBm 110VAC, master unit ready for add-on with fan hood	MBF-4308-4317-4319-4326-110V-F
700/SPRINT800&850/AWS/1900	MBF-40 700/SPRINT800&850/AWS/1900 43/43/43/43 dBm 110VAC, master unit with fan hood	MBF-4307-4308-4317-4319-110V-F

Copyright © 2015 Axell Wireless Limited trading as Cobham Wireless

All rights reserved.

No part of this document may be copied, distributed, transmitted, transcribed, stored in a retrieval system, or translated into any human or computer language without the prior written permission of Axell Wireless Limited trading as Cobham Wireless.

The manufacturer has made every effort to ensure that the instructions contained in this document are adequate and free of errors and omissions. The manufacturer will, if necessary, explain issues which may not be covered by this document. The manufacturer's liability for any errors in the document is limited to the correction of errors and the aforementioned advisory services.

This document has been prepared to be used by professional and properly trained personnel, and the customer assumes full responsibility when using them. The manufacturer welcomes customer comments as part of the process of continual development and improvement of the documentation in the best way possible from the user's viewpoint. Please submit your comments to the nearest Cobham Wireless sales representative.

Contact Information

Headquarters	Axell Wireless trading as Cobham Wireless Aerial House, Asheridge Road Chesham, Buckinghamshire HP5 2QD, United Kingdom Tel: +44 1494 777000 Fax: +44 1494 777002
Commercial inquiries	cw.coverage@cobham.com
Website	www.cobham.com/wireless
Support issues	cw.support@cobham.com
Technical Support Line, English speaking	+44 1494 777 747

About This Manual

This Product Manual provides the following information:

- Description of the Repeater unit
- Procedures for setup, configuration and checking the proper operation of the unit
- Maintenance and troubleshooting procedures

Intended Audience

This Product Manual is intended for experienced technicians and engineers. It is assumed that the customers installing, operating, and maintaining Cobham Wireless Repeaters are familiar with the basic functionality of Repeaters.

Notice

Confidential - Authorized Customer Use

This document may be used in its complete form only and is solely for the use of Cobham Wireless employees and authorized Cobham Wireless channels or customers. The material herein is proprietary to Cobham Wireless. Any unauthorized reproduction, use or disclosure of any part thereof is strictly prohibited.

All trademarks and registered trademarks are the property of their respective owners.

Disclaimer of Liability

Contents herein are current as of the date of publication. Cobham Wireless reserves the right to change the contents without prior notice. The information furnished by Cobham Wireless in this document is believed to be accurate and reliable. However, Cobham Wireless assumes no responsibility for its use. In no event shall Cobham Wireless be liable for any damage resulting from loss of data, loss of use, or loss of profits and Cobham Wireless further disclaims any and all liability for indirect, incidental, special, consequential or other similes damages. This disclaimer of liability applies to all products, publications and services during and after the warranty period.

Guarantees

- All antennas must be installed with lightning protection. Damage to power modules, as a result of lightning are not covered by the warranty.
- Switching on AC or DC power prior to the connection of antenna cables is regarded as faulty installation procedure and therefore not covered by the Cobham Wireless warranty.
- The repeater box should be closed using the two screws. The screws must be fully tightened. Failure to do so may affect the IP65 compliancy and therefore any warranty.

Exclusive Remedies

The remedies provided herein are the Buyer's sole and exclusive remedies. Cobham Wireless shall not be viable for any direct, incidental, or consequential damages, whether based on contract, tort, or any legal theory.

System Operation

- The Input / Output RF level power level monitoring windows are for indication only and should not be considered a replacement for laboratory test equipment accuracy of measurement of actual signal levels. The error of measurement will be high at low input levels.
- The normal operating range of signal measurement is as follows:
  - Downlink Output range +20dBm to +43dBm
  - Uplink Output range -10dBm to +5dBm

System Maintenance

- In the event of a failure Cobham Wireless's support service should be contacted for advice on a possible module replacement or other action to be taken.
- If a shipment of a repeater back to Cobham Wireless is made within the period of guarantee the original packing must be used.
- The system normally operates without any operator intervention or maintenance. If in the unlikely event of any unit failure, the faulty repeater should be replaced. A failed unit can be removed and replaced with a spare while the rest of the system (other repeaters) is still operating. However, the power supply of the failed repeater should be isolated from the power before anything is replaced.
- Component Replacement - None of the modules in the repeater can be replaced without removing the repeater from its mounting and opening the cover of the repeater.
- In the event of a malfunction in the system, the status of the antenna systems as well as the continuity of the cabling should be checked before replacing any modules within the repeater.

Product Disposal

Product Disposal - Disposal of this product must be handled according to all national laws and regulations. For detailed information regarding materials, please refer to Cobham Wireless.

System Batteries

The Repeater contains two types of batteries:

- A battery pack in the power supply unit, consisting of 8X NiMh batteries.
- A button cell CR1216 on the controller board.

CAUTION!! Risk of explosion if battery is replaced by an incorrect type. Dispose of used batteries according to local laws and instructions.

Compliance with FCC

FCC Part 20 Warning Statement

WARNING: This is NOT a CONSUMER device. It is designed for installation by FCC LICENCEES and QUALIFIED INSTALLERS. You must have an FCC LICENCE or express consent of an FCC Licensee to operate this device.

Unauthorized use may result in significant forfeiture penalties, including penalties in excess of $100,000 for each continuing violation.

If not installed and used in accordance with the instructions, this equipment generates, uses and can radiate radio frequency energy. However, there is no guarantee that interference will not occur in a particular installation. If this equipment does cause harmful interference to RF reception, which can be determined by turning the equipment off and on, the user is encouraged to try to correct the interference by one or more of the following measures:

- Increase the separation between the equipment and receiver.
- Connect the equipment into an outlet on a circuit different from that to which the receiver is connected.

Unauthorized Changes to Equipment

Changes or Modifications not expressly approved by the manufacturer responsible for compliance could void the user's authority to operate the equipment.

FCC RF Exposure Limits

This unit complies with FCC RF exposure limits for an uncontrolled environment. This equipment must be installed and operated with a minimum distance of 190 cm. between the radiator and any person's body.

Antenna Installation

Installation of an antenna must comply with the FCC RF exposure requirements. The antenna used for this booster must be mounted on outdoor or indoor permanent structures.

Compliance with IC

Under Industry Canada regulations, this radio transmitter may only operate using an antenna of a type and maximum (or lesser) gain approved for the transmitter by Industry Canada.

To reduce potential radio interference to other users, the antenna type and its gain should be so chosen that the equivalent isotropically radiated power (e.i.r.p.) is not more than that necessary for successful communication.

The Manufacturer's rated output power of this equipment is for single carrier operation. For situations when multiple carrier signals are present, the rating would have to be reduced by 3.5dB, especially where the output signal is re-radiated and can cause interference to adjacent band users. This power reduction is to be by means of input power or gain reduction and not by an attenuator at the output of the device.

Conformément à la réglementation d'Industrie Canada, le présent émetteur radio peut fonctionner avec une antenne d'un type et d'un gain maximal (ou inférieur) approuvé pour l'émetteur par Industrie Canada.

Dans le but de réduire les risques de brouillage radioélectrique à l'intention des autres utilisateurs, il faut choisir le type d'antenne et son gain de sorte que la puissance isotrope rayonnée équivalente (p.i.r.e.) ne dépasse pas l'intensité nécessaire à l'établissement d'une communication satisfaisante.

La puissance de sortie nominale indiquée par le fabricant pour cet appareil concerne son fonctionnement avec porteuse unique. Pour des appareils avec porteuses multiples, on doit réduire la valeur nominale de 3.5dB, surtout si le signal de sortie est retransmis et qu'il peut causer du brouillage aux utilisateurs de bandes adjacentes. Une telle réduction doit porter sur la puissance d'entrée ou sur le gain, et ne doit pas se faire au moyen d'un atténuateur raccordé à la sortie du dispositif.

General Safety Warnings Concerning Use of System

Always observe standard safety precautions during installation, operation and maintenance of this product.

Caution labels!	Throughout this manual, there are "Caution" warnings. "Caution" calls attention to a procedure or practice, which, if ignored, may result in injury or damage to the system, system component or even the user. Do not perform any procedure preceded by a "Caution" until the described conditions are fully understood and met.
Electrical Shock	**DANGER!!** To prevent electrical shock when installing or modifying the system power wiring, disconnect the wiring at the power source before working with un insulated wires or terminals.
Caution: Safety to personnel	• Before installing or replacing any of the equipment, the entire manual should be read and understood. • The user needs to supply the appropriate AC or DC power to the repeater. Incorrect power settings can damage the repeater and may cause injury to the user. • Please be aware that the equipment may, during certain conditions become very warm and can cause minor injuries if handled without any protection, such as gloves.
Caution: RF Exposure	• RF radiation, arising from transmitter outputs connected to AWL's equipment, must be considered a safety hazard. • This condition might only occur in the event of cable disconnection, or because a 'spare' output has been left un-terminated. Either of these conditions would impair the system's efficiency. No investigation should be carried out until all RF power sources have been removed. This would always be a wise precaution, despite the severe mismatch between the impedance of an N type connector at 50 ohm, and that of free space at 377 ohm, which would severely compromise the efficient radiation of RF power. Radio frequency burns could also be a hazard, if any RF power carrying components were to be carelessly touched! • Antenna positions should be chosen to comply with requirements (both local & statutory) regarding exposure of personnel to RF radiation. When connected to an antenna, the unit is capable of producing RF field strengths, which may exceed guideline safe values especially if used with antennas having appreciable gain. In this regard the use of directional antennas with backscreens and a strict site rule that personnel must remain behind the screen while the RF power is on, is strongly recommended. • Where the equipment is used near power lines or in association with temporary masts not having lightning protection, the use of a safety earth connected to the case-earthing bolt is strongly advised.
Caution: Safety to equipment	• When installing, replacing or using this product, observe all safety precautions during handling and operation. Failure to comply with the following general safety precautions and with specific precautions described elsewhere in this manual violates the safety standards of the design, manufacture, and intended use of this product. • Changes or modifications not expressly approved by the party responsible for compliance could void the user's authority to operate the equipment. • Cobham Wireless assumes no liability for the customer's failure to comply with these precautions. This entire manual should be read and understood before operating or maintaining the repeater.

Warning: Restricted Access Location	Access to the MBF-40 unit installation location is restricted to authorized SERVICE PERSONNEL.
Attention: Electrostatic Sensitivity	• Observe electrostatic precautionary procedures. • ESD = Electrostatic Discharge Sensitive Device. • Static electricity can be conducted to the semiconductor chip from the centre pin of the RF input connector, and through the AC connector pins. When unpacking and otherwise handling the repeater, follow ESD precautionary procedures including use of grounded wrist straps, grounded workbench surfaces, and grounded floor mats.
 Caution: Class 1 Laser	The repeaters described in this manual are equipped with class 1 lasers, as per definition in EN 60825-1 **Caution** - Un-terminated optical receptacles may emit laser radiation. Exercise caution as follows: • Do not stare into beam or view with optical instruments. Optical transmitters in the Fibre optic converter can send out high energy invisible laser radiation. There is a risk for permanent damage to the eye. • Always use protective cover on all cables and connectors which are not connected. • Never look directly into a Fibre cable or a connector. • Consider that a Fibre can carry transmission in both directions. • During handling of laser cables or connections, ensure that the source is switched off. • Regard all open connectors with respect and direct them in a safe direction and never towards a reflecting surface. Reflected laser radiation should be regarded as equally hazardous as direct radiation.

Table of Contents

1 SYSTEM DESCRIPTION 1-1
1.1 Features and Capabilities 1-2
1.2 ALC 1-3
1.3 Operating Temperature 1-3
1.4 MBF-40 Management Web GUI 1-3
1.5 MIMO Topology 1-4
1.6 Five-Band Configuration 1-5
1.7 MBF-40 Basic Interfaces 1-6
1.7.1 Securing the Unit 1-6
1.7.2 External Interfaces 1-7
1.7.3 Internal Interfaces 1-8

2 REPEATER INSTALLATION 2-1
2.1 Requirements 2-1
2.1.1 Service Antenna Requirements (English) 2-1
2.1.2 Service Antenna Requirements (French) 2-3
2.1.3 RF Cable Installation Guidelines 2-4
2.1.4 Grounding Wires Requirements 2-5
2.1.5 Power Requirements 2-5
2.1.6 Optic Cables Guidelines 2-6
2.1.7 EMV Protection 2-7
2.1.8 External Alarm and Relay Considerations 2-8
2.1.9 Location Criteria 2-8
2.2 Standard Repeater Installation 2-10
2.2.1 Overview 2-10
2.2.2 Unpacking and Accessories 2-11
2.2.3 Rack Mount Installation 2-11
2.2.4 Wall Mount Installation 2-13
2.2.5 Grounding 2-19
2.2.6 Optic Fibre Connection 2-19
2.2.7 Service Antenna Connections 2-22
2.2.8 Power Connections and Power On 2-23
2.2.9 Optional - External Alarm and Relay Connections 2-27
2.2.10 Closing and Securing the Repeater 2-28
2.3 Repeater with Fan Hood Installation 2-29
2.3.1 Assembly Overview and Dimensions 2-29
2.3.2 Physical Installation Overview 2-31
2.3.3 Unpacking 2-32
2.3.4 Bracket and Fan-Hood Assembly 2-33
2.4 Five-Band System Installation 2-38
2.4.1 Master Slave System Cable Requirements 2-38
2.4.2 Overview 2-38
2.4.3 Connecting Master and Slave Units 2-39
2.4.4 Master/Slave Connections for External Alarms 2-41

3 OPENING A SESSION AND NAVIGATING GUI 3-1
3.1 Opening a Direct Web Session 3-1
3.1.1 Connecting Locally 3-1
3.1.2 Remote Connection and Login 3-2
3.2 Open a Session to the MBF-40 via the OMU II 3-2
3.3 Navigating the Web Interface 3-3

3.3.1 Management Options Buttons 3-4
3.3.2 Home Screen Overview 3-5
3.3.3 Configuration Screen Overview 3-6
3.3.4 Five Service System GUI 3-7

4 MBF-40 COMMISSIONING 4-1

4.1 MBF-40 Optical Loss Adjustment (OLA) 4-1

4.2 RF Balancing 4-3

4.2.1 Manual RF Balancing 4-3
4.2.2 Automatic MBF-40 RF Balancing 4-5

4.3 Integration into the AEM 4-6

4.4 What Next? 4-6

5 MBF-40 FULL GUI DESCRIPTION 5-1

5.1 Configuring General Parameters 5-1

5.1.1 Site Information – MBF-40 Identification 5-1
5.1.2 Date & Time 5-2
5.1.3 Configure External Alarms 5-3
5.1.4 IP Address 5-4

5.2 Remote Communication and Fault Notification Setup 5-5

5.2.1 TCP/IP and Ethernet 5-5
5.2.2 SNMP Support 5-6

5.3 User Accounts 5-7

5.3.1 Default User Accounts 5-7
5.3.2 User Access Levels 5-8
5.3.3 Change Password 5-8

5.4 Reboot 5-9

5.5 CLI (Command Line Interface) Shell 5-9

5.6 Attribute Reference 5-10

6 MONITORING AND FAULT SOURCING 6-1

6.1 Monitoring Via the MBF-40 Home Screen 6-2

6.1.1 General Page Area 6-3
6.1.2 Detailed view of the MBF-40 6-3
6.1.3 Detailed view of Fibre Optic Unit 6-5
6.1.4 Subsystems 6-5

6.2 Logs Screen 6-6

6.3 Module LEDs 6-6

6.3.1 Control Module LEDs 6-8
6.3.2 F/O Converter LEDs 6-8
6.3.3 Power Supply LEDs 6-9

Appendix A - US Specifications 1

Appendix B - Canada Specifications 1

Appendix C – F/O Cleaning Procedure 1

1 SYSTEM DESCRIPTION

The MBF - Multi-Band Fibre optic fed system encapsulates solutions for both indoor and outdoor environments for single or multi-operator use. It offers seamless coverage in any indoor environment such as tunnels, metros and larger buildings.

Signals are coupled off from a nearby base station and then distributed via fiber to one or several MBF repeaters.

Up to 5 frequency bands can be supported over single F/O cable to allow future upgrades w/o the need to add additional cables, done thru master unit (with F/O interface) and slave unit (w/o F/O) connected to the master unit.

The high output power of the remote unit results in a need to deploy a fewer number of sites, which in turn lowers the capital expenditures for the roll-out as a whole.

These remote units can be installed up to 12.5 miles (20 Km) from the base station site, offering a great flexibility when providing RF coverage in areas where off air transmission is not a preferable solution. A distributed antenna system can be used to distribute the signal throughout the area to be covered.

Cobham Wireless can provide a complete solution including design, site surveys and equipment related to the POI (Point Of Interface) such as combiners, filters, cross band couplers, etc. The MBF product family includes version for single band, dual band, tri band and quad band variants available in various combinations.

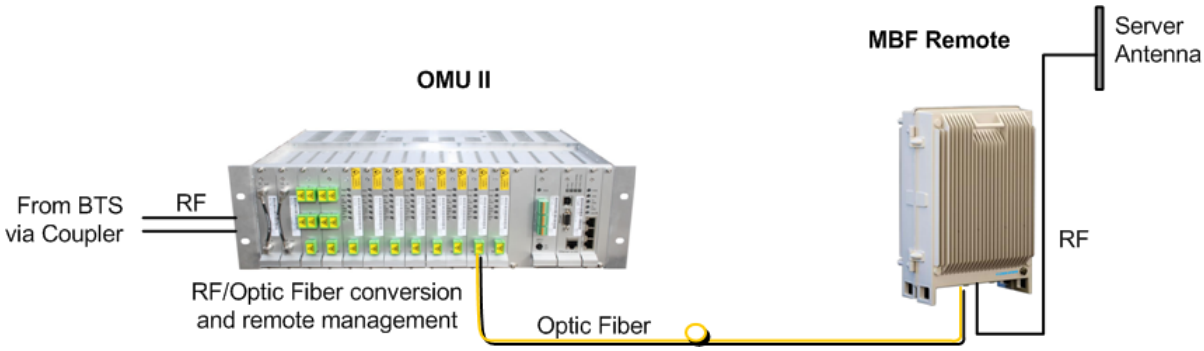

Figure 1-1: Illustration of a standard OMU II MBF Remote Application

1.1 Features and Capabilities

- High output power
- High efficiency MCPA amplifier technology
- Advanced and user-friendly remote control and supervision
- Up to four frequency bands in one enclosure
- Single enclosure MIMO support
- Up to 5 frequency bands over the same F/O cable (2 enclosures, master –slave configuration)
- Output power at the antenna (composite): 37dBm, 39dBm, 43dBm (model dependent)
- Very low noise factor - minimizes interference to BTS and increases high speed data throughput
- Single or Dual Fiber feed models available
- Remote commissioning and monitoring:
  - Via OMU II intuitive Web GUI
  - Via AEM – no local setup required
  - SNMP v1/v2c support
- Plug-and-Play: Automatic detection and Optical Gain Setting via the OMU
- Automatic Level Control (ALC) - provides constant gain in both uplink and downlink paths according to the defined maximum output level
- Automatic optical gain setting - he gain is adjusted in the downlink chain by measuring the level of the pilot carrier sent from the Optical Master Unit (OMU). The level of the received pilot carrier is continuously monitored
- Backup battery for 'last gasp' indication (sending fault error before power failure)
- Optional - two internal power supplies provided for some models ensure robust unit operation
- Power source: 115VAC or -48V power (model dependent)

1.2 ALC

The repeater has a constant gain in both uplink and downlink paths. The repeater has a defined maximum output level. If the input signal amplified by the gain set exceeds the set output limit, an ALC (Automatic Level Control) loop is activated. This ALC ensures that the amplifier does not add distortion to the radio signal. Below are examples of the ALC function for one and two carriers.

1.3 Operating Temperature

The MBF-40 is designed primarily for multi carrier purposes. If the repeater is run at full output power over a long period of time, additional, external cooling may be required; this can take the form of air-conditioning or an external fan assembly.

Specific MBF-40 models, whose power consumption exceeds 400W, are provided with an additional fan hood cooling assembly.

NOTE: The repeater is equipped with a power management function that steps down the power and, if needed, fully shuts down the amplifier chains until temperature reaches normal values.

1.4 MBF-40 Management Web GUI

MBF-40 is remotely commissioned and monitored via an OMUII session. Local access to the unit is not required for commissioning.

Additional configuration and troubleshooting options are available via a direct connection to the MBF-40 IP address. A direct session can be opened locally or remotely.

NOTE: Direct remote communication requires connecting the MBF-40 to an Ethernet network.

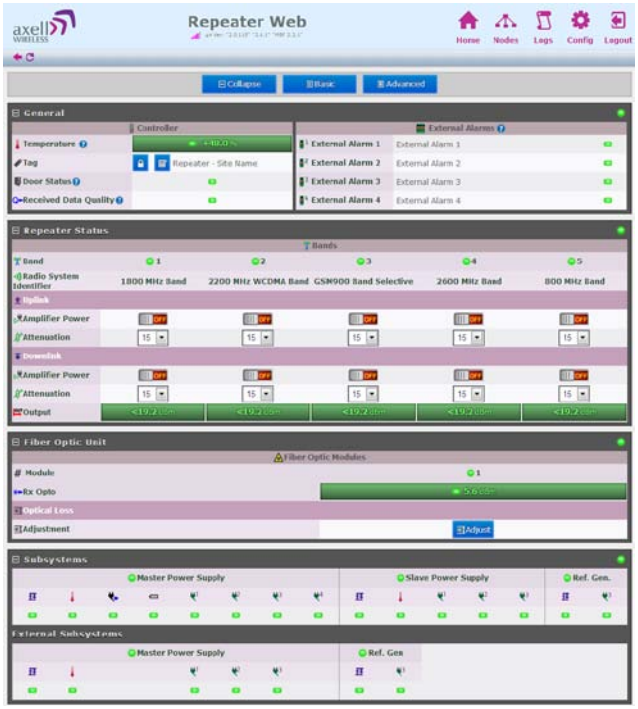

Figure 1-2: MBF-40 Home Screen

1.5 MIMO Topology

MIMO configuration is supported by specific MBF-40 models. The physical casing of these models supports two antenna ports and includes two (internal) optic conversion modules (see section 1.7.3.2).

MBF-40 MIMO topology requires an OMU II unit that supports at least two sectors. Two dedicated optic Fibres are routed from the OMU II towards the MBF-40.

Where relevant, MIMO specific installation instructions are provided in the manual.

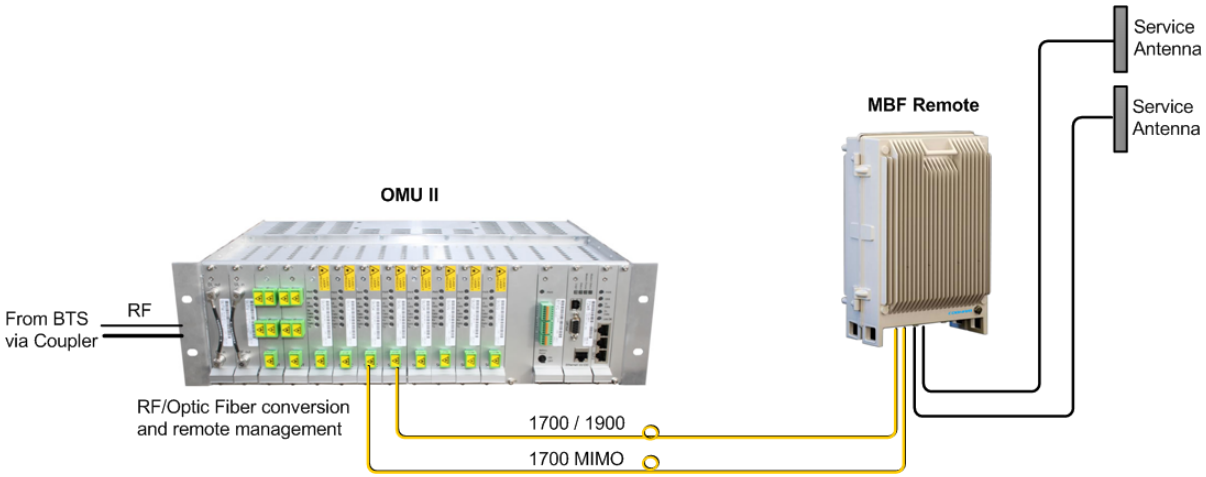

Figure 1-3: MIMO OMU II-MBF-40 Remote Application

1.6 Five-Band Configuration

Cost effective five-band support over a single fibre-optic is implemented using two MBF-units: MBF-40 Slave unit and MBF-40 Master unit. The Master unit can be either tri-band or quad-band unit, where the Slave provides single-band or dual-band support for a total of five bands.

All the services are routed to the Master unit via the optic fibre. The relevant (tri or quad) services are filtered by the Master unit and forwarded along with the unfiltered Slave services towards the Slave unit. At the Slave unit, the additional services are filtered and all five services are routed towards the service antenna for distribution. Five-Band System installation instructions are provided in section 2.4.

NOTE: The Web interface displays the five band service system as a single, 5-band unit. See Section 3.3.4. The connections between the two units are detailed in section 2.4.

The following figure shows a Master/Slave configuration. The figure below shows a five band configuration implemented using a quad-band Master and single-band Slave. The example shows connections for a configuration WITHOUT external alarms.

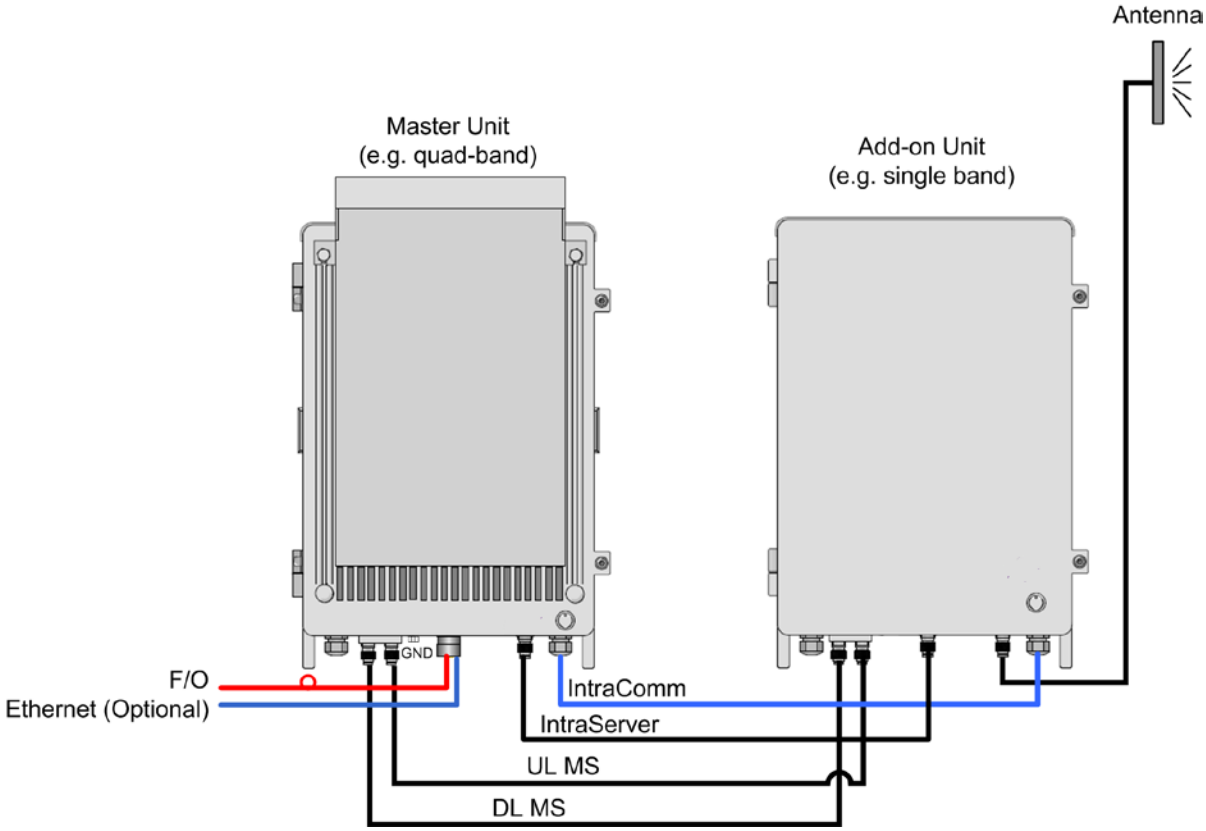

Figure 1-4: Example of Five-band Configuration

1.7 MBF-40 Basic Interfaces

NOTE: This section describes the interfaces for MBF-40 models supporting up to four services and whose power consumption does not exceed 400W. MBF-40 models, supporting five services and with power consumption exceeding 400W are described in the relevant sections in chapter 2.

The MBF unit provides several types of interfaces:

- Lock and screws for protection and security
- External service antenna and GND connections
- Internal connections for power, Fibre optics and alarm cables routed via openings in the chassis
- Internal USB and Ethernet connections for local setup via Web GUI

1.7.1 Securing the Unit

The repeaters are secured with two hex screws (M8) and can also be locked with a key.

NOTE: The two screws must be fully tightened. Failure to do so may affect the IP65 compliancy and therefore any warranty.

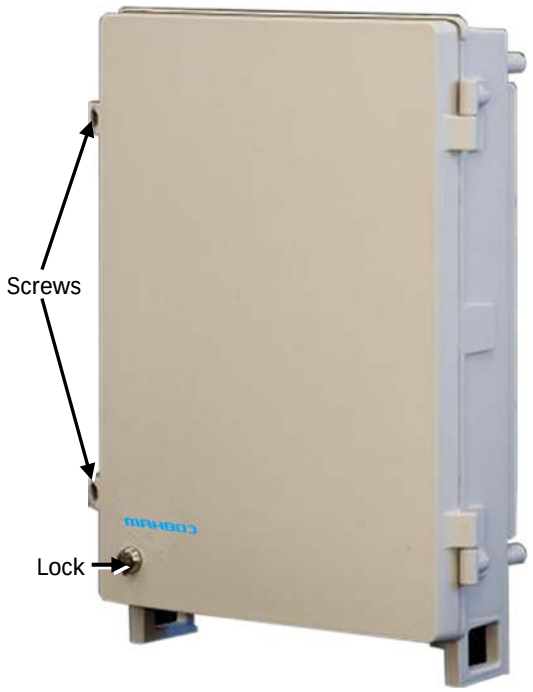

Figure 1-5: Securing Single/Dual Band

Figure 1-6: Securing Tri/Quad Band

1.7.2 External Interfaces

The repeater's interfaces are located on the underside. Two basic models are available: single and dual service antennas.

NOTE: The external connections at the bottom of the repeater can be protected with a cover which is screwed in place.

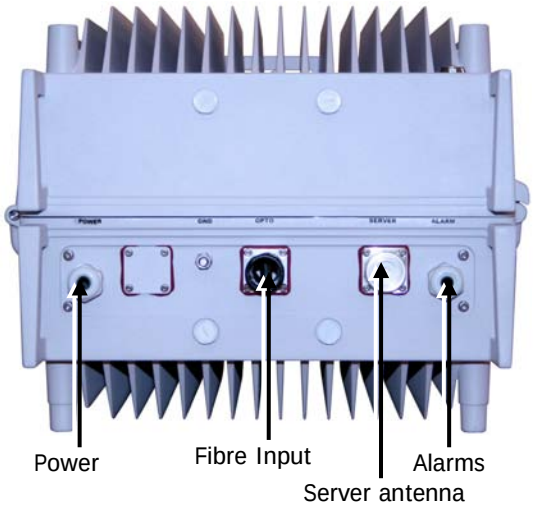

Figure 1-7: Single Service Antenna

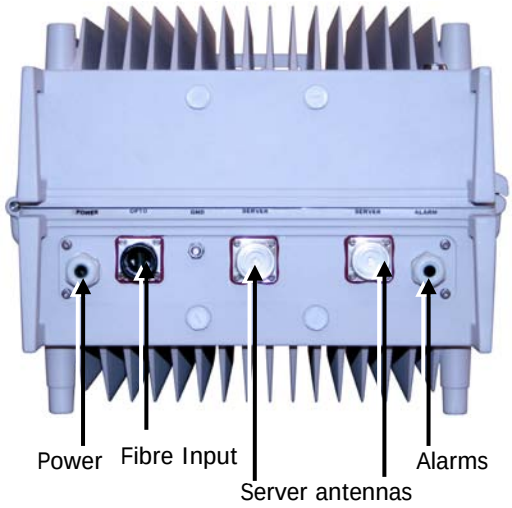

Figure 1-8: Dual/MIMO Service Antenna

The following table provides a description of the front panel ports and connections.

Port	Description
Server	Service antenna connection - DIN 7/16" connector, female
Optic	SC/APC Fibre optic inlet through which the optic Fibre is routed for internal connections (section 2.2.6). For MIMO models – route the two Fibres via the Fibre port. NOTE: Optic Fibre Conduit hose fitter may be pre-assembled.
Power	Plinth connection for routing power for internal connection (section 2.2.8.1)
Alarms	Plinth connector for routing external alarms and relay wiring cable for internal connections (section 2.2.9).
GND	Grounding lug (section 2.2.4)

1.7.3 Internal Interfaces

This section shows the internal interfaces for the MBF-40 repeater. It is required to open the repeater during installation in order to connect the *power*, *optic fibres* and (optionally), the *external alarms*. In addition, it is required to verify the *power and battery switches* are set to ON.

NOTE: The repeater is usually set up via an OMU II session. However, the user can open a direct local connection to the repeater Control module (requires opening the repeater) in order to troubleshoot or to set up the repeater parameters.

The repeater internal interfaces vary according to the repeater model. The model can include any combination of the following:

- Single or dual clamshell enclosure, according to the bands
- A single or a dual power-supply;
- A single or dual antenna port;
- MIMO support;

1.7.3.1 Single Power Supply Dual Antenna Ports

The following figure provides an example of a repeater with a single power supply and two antenna ports.

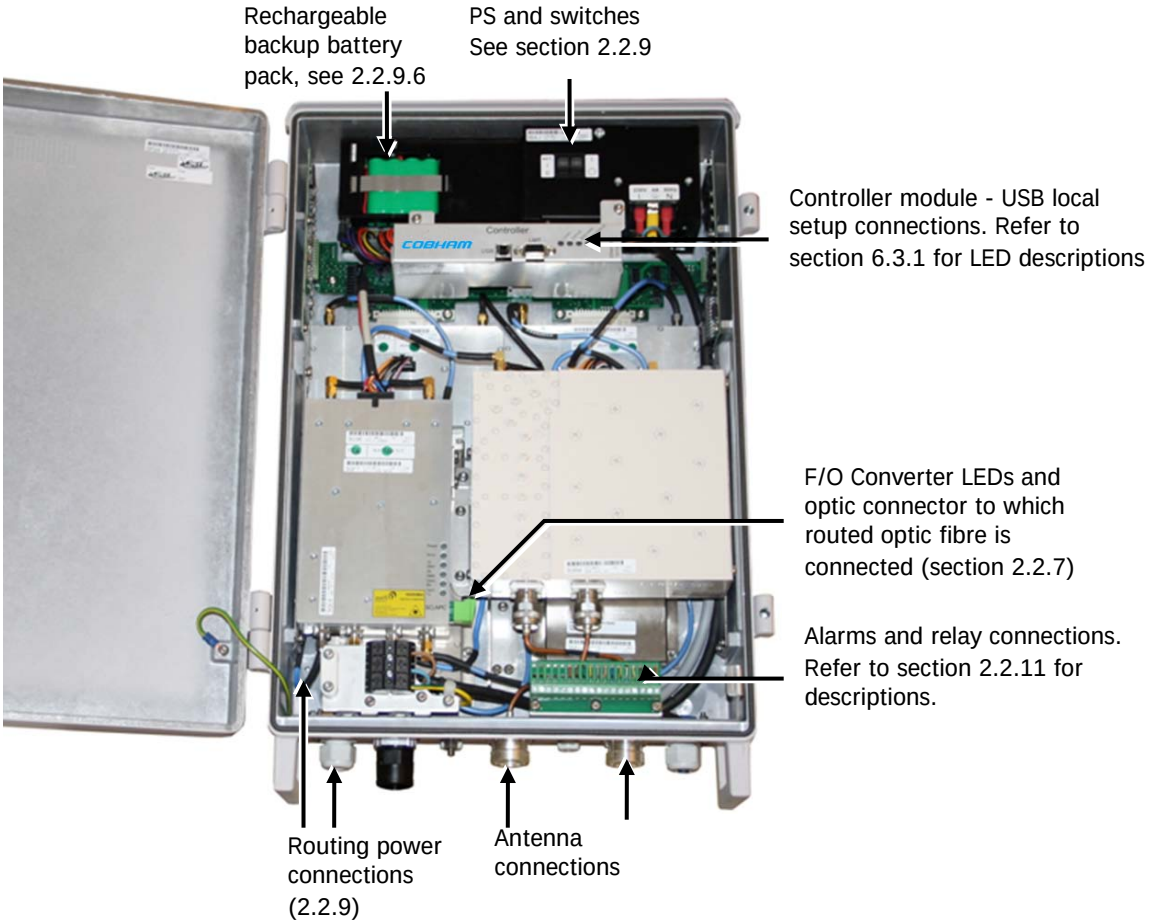

Figure 1-9: Example of Model Supporting a Single Power Supply and Dual Service Antenna Ports

1.7.3.2 MIMO Model

The MIMO model includes two Service Antenna ports and two Optic Converter modules (shown below). All other connections and interfaces are similar to the above models.

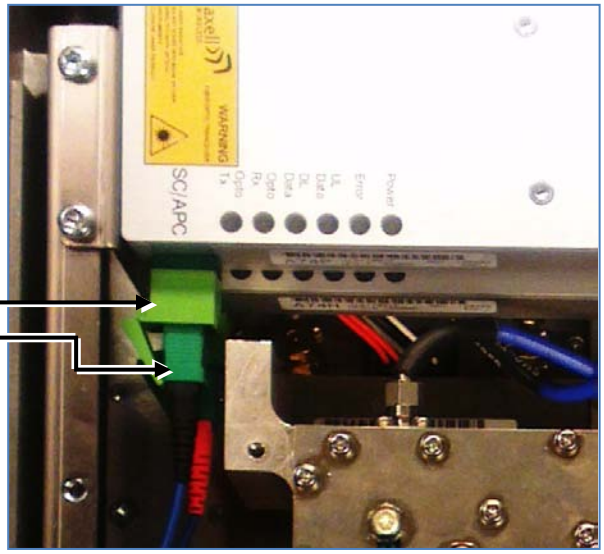

Figure 1-10: MIMO Model

1.7.3.3 Dual Power Supply Model

The figure below provides an *example* of a unit with a dual power supply. The internal view of your unit may differ.

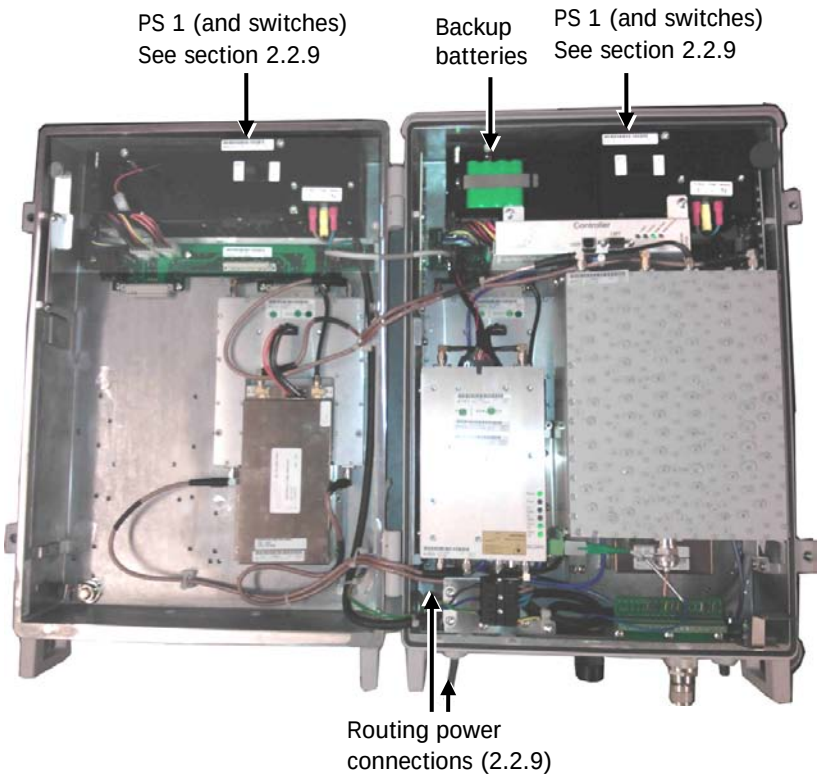

Figure 1-11: Example of Dual Power Supply Model

2 REPEATER INSTALLATION

This chapter describes the service antenna requirements and the installation of various repeater models, including repeaters with fan assemblies (section 2.3) and five service Master / Slave systems (section 2.4).

ATTENTION!!

- Maximum input power should not exceed (zero) 0 dBm
- Follow all local safety regulations when installing the Signal Booster
- Only qualified personnel are authorized to install and maintain the Signal Booster
- Follow Electro-Static Discharge (ESD) precautions
- Please be aware that the equipment may, during certain conditions become very warm and can cause minor injuries if handled without any protection, such as gloves.

2.1 Requirements

This section describes the requirements for the following:

- Service antenna
- RF Cable installation guidelines
- Grounding wire requirements
- Power wiring requirements
- Optic cable guidelines
- EMV protection
- Repeater location selection

2.1.1 Service Antenna Requirements (English)

This section provides information on the specifications of the service antennas suitable for operation with this repeater, on the installation requirements of the antennas and on the Repeater installation site and cable requirements.

ATTENTION!!

- The installer is held accountable for implementing the rules required for deployment.
- Good engineering practice must be used to avoid interference.
- Output power should be reduced to solve any IMD interference issues.
- The installation height of the antenna for AWS band (1700/2100 MHz) operations is limited to 10 meters above ground for compliance with 47 CFR 27.50.

2.1.1.1 Required Antenna Information

The following antenna requirements, specifications and site considerations should be met.

- Type of installation – indoor or outdoor
- Service area type and size
- Antenna type and characteristics
- Height
- Length and type of coaxial cable required for connecting the Service antenna to the Remote and the attenuation.

2.1.1.2 Recommended Antennas

The Service antenna is installed indoors, where the type of antenna depends on the application.

Specifications:

- One or a combination of the following antennas can be used: Ceiling Mount Patch antenna, Wall Mount Patch antenna, Corner Reflector.
- Choose an antenna with high side lobe attenuation which enables maximum isolation from other service/ mobile antennas.
- Net gain [Gain Antenna – Cable loss] must not exceed 9 dBi
- Antennas with gain < 9 dBi can be connected *directly* to the MBF-40 ports.
- Higher gain antennas may be connected to the MBF-40 ports along with adequate cable and splitting losses

Typical antenna types:

- Indoor Dome 2.1 dBi; beam width 360°
- Indoor Panel 4.2 dBi; beam width 106°
- Radiating Cable Typically < -50 dBi

2.1.1.3 Recommended Splitters and Couplers

Recommended Splitters

Splitter part numbers	90 - 851102	90 - 851103	90 – 851104
Frequency band	700 – 2700 MHz	700 – 2700 MHz	700 – 2700 MHz
Split	2 way	3 way	4 way
Max Insertion Loss	0.4 dB	0.6 dB	0.6 dB
Split Loss	3 dB	4.8 dB	6 dB

Recommended Couplers

Coupler part numbers	90 - 852206	90 - 852210	90 – 852215	90 – 852220
Frequency band	700-2700 MHz	700–2700 MHz	700–2700 MHz	700–2700 MHz
Coupling	-6dB ±0.8dB	-10dB ±1.0dB	-15dB ±1.0dB	-20dB ±1.0dB
Max Mainline Loss	1.7 dB	0.8 dB	0.4 dB	0.22 dB

2.1.2 Service Antenna Requirements (French)

Cette section fournit des informations sur les spécifications du donneur et des antennes de services adaptés pour fonctionner avec ce répéteur, sur les conditions d'installation des antennes et sur le site d'installation de répéteur et exigences de câblage.

ATTENTION!!

- *L'installateur est tenu pour responsable de la mise en œuvre des règles nécessaires au déploiement.*
- *Les bonnes pratiques d'ingénierie doit être utilisée pour éviter les interférences.*
- *Puissance de sortie doit être réduite pour résoudre tous les problèmes d'interférence de l'IMD.*

2.1.2.1 Antenne Informations Requises

Les exigences d'antenne suivants, les spécifications et considérations du site doivent être remplies:

- *Type d'installation - à l'intérieur ou à l'extérieur*
- *Type de zone de service et la taille*
- *Type et les caractéristiques de l'antenne*
- *Hauteur*
- *La longueur et le type de câble coaxial requis pour relier l'antenne au répéteur et l'atténuation.*

2.1.2.2 FCC et IC conformité de l'installation intérieure

L'antenne de service est installé à l'intérieur, où le type d'antenne dépend de l'application.:

- *Un ou une combinaison des antennes suivantes peuvent être utilisées: Antenne Patch pour montage au plafond, antenne Patch pour montage mural, Réflecteur en Coin.*
- *Choisissez une antenne à haute côté atténuation du lobe qui permet une isolation maximum des autres services / antennes mobiles.*
- *Gain net [Gain Antenna - la perte de câble] ne doit pas dépasser 9 dBi*
- *Les antennes à gain < 9 dBi peut être connectée directement aux ports MBF-40.*
- *Antennes à gain plus élevées peuvent être connectés aux ports MBF-40 avec des pertes de câble et de division adéquates.*

2.1.2.3 Critères d'installation de l'antenne d'installation d'intérieur

Déterminer la configuration de l'installation de l'antenne, selon les exigences de transmission et les conditions du site d'installation.

Exigences d'installation:

- *Une antenne intérieure doit être installée à un endroit pratique. Il doit être libre de tout obstacle métallique.*
- *Installez l'antenne de service à la hauteur désignée et l'accorder à peu près vers la zone de couverture du service.*
- *L'installation de cette antenne doit fournir une distance minimale de séparation de 190 cm de tout le personnel dans la région*

2.1.2.4 Indoor Installations Service/Mobile Antenna Requirements

Determine the antenna installation configuration, according to the transmission requirements and the installation site conditions.

Installation requirements:

- An indoor antenna should be installed at a convenient location. It should be free of metallic obstruction.
- Install the Service Antenna at the designated height and tune it roughly toward the Service coverage area.

2.1.2.5 Outdoor Installations

For applications in which the Service/Mobile antenna is installed outdoor, the antenna type is chosen according to the available infrastructure (single-pole or horizontal installation). In addition, isolation between the donor and service antennas must be taken into account when selecting the location of the antennas.

2.1.3 RF Cable Installation Guidelines

- For all coaxial connections to/from the Repeater – use high performance, low-loss, 50 ohm coaxial communication cables.
- All cables shall be weather-resistant type.

- Cable length – determined by the Repeater installation plan. When calculating the cable length, take into account excess cable slack so as not to limit the insertion paths.
- Make sure the cable and the connector are compatible. Using cables and connectors from the same manufacturer is helpful.
- All connectors must be clean and dry.
- Waterproof all outdoor connections using silicon, vulcanizable tape or any other suitable substance, as moisture and dust can impair RF characteristics
- Make sure enough room has been allocated for the bending radius of the cable. RF cables must not be kinked, cut or damaged in any way.
- Connect the RF cable to the antenna tightly but without damaging threads.
- Fasten cable tightly to cable ladder or aluminium sheet.
- For short length feeder cables, use 1/2"; for longer feeder cables, use 7/8". Choose thicker coax cables for lower attenuation. Minimize the length of the coax cables to reduce attenuation.
- Use jumper cable for easy installation. The RF coaxial cable can be substituted at each end with a jumper cable.

2.1.4 Grounding Wires Requirements

WARNING!!! Do not use the repeater grounding bolt to connect external devices.

Requirements for grounding wires

- Ensure that good grounding protection measures are taken to create a reliable repeater site.
- Make sure to use adequately dimensioned grounding cables. The minimum recommended conductive area for a grounding cable is 16mm^2
- Make sure the grounding product used is suitable for the type and size of used cable.
- Connect the repeater box bolt to the same ground.

2.1.5 Power Requirements

This section describes the circuit breaker requirements and power cabling and connection considerations for 230VAC power source and for -48VDC power sources.

2.1.5.1 Circuit Breaker Requirements

The power connections to the unit are hard-wired. To disconnect the unit (either manually or automatically in case of overcurrent), it is required to install a circuit breaker *on the wall near the unit*, at an easily accessible distance and location from the unit.

Circuit-breaker minimum requirements

- 250 VAC - Maximum current 10A
- Needs to be SAFETY approved
- Use only a two-pole disconnect device.
- Requires minimum contact separation of 3mm.
- Install on the wall near the unit.

2.1.5.2 115 VAC Power Source Cable Requirements

Cable requirements:

- Cable should be NRTL (safety) approved with a minimum of 14AWG or $2.5\mathrm{mm}^2$ per conductor, and maximum of 12AWG or $4\mathrm{mm}^2$ per conductor.
- For safety, the GND cable must be **10mm longer** than the Phase and Neutral cables.

2.1.5.3 -48V Power Source Connection Requirements

Note: The -48VDC version of the power supply is designed to turn off if the supply voltage falls below -36V (±1V), not to drain the feeding battery. It will turn on again as the supply voltage reaches -43V (± 1V).

-48V power supply requirements

The 48VDC power supply must comply with SELV requirements, as defined in EN60950, which implies double isolation. The output power needs to be 48VDC +25%/-15%. The maximum input current is 8A.

Recommended cable areas for 48VDC

Distance	Cable Area
0 - 10 meters between repeater and power supply	2,5 mm²
10 – 50 meters between repeater and power supply	4 mm²
Over 50 meters between repeater and power supply	Recommendation is to reconfigure the installation, or to make special arrangements to increase cable area

2.1.6 Optic Cables Guidelines

This product is equipped with **Class 1 Lasers**, as per definition in EN 60825-1.

CAUTION!!!
Un-terminated optical receptacles may emit laser radiation.
Do not stare into beam or view with optical instruments.

WARNINGS!!
Maximum input power should not exceed (zero) 0 dBm
Clean the Fibre connectors (receptacles and cables) before connecting. See Appendix C – F/O Cleaning Procedure for details on F/O cleaning procedures.

Note the following:

- This procedure requires opening the repeater.
- Use angled APC connectors at 8deg angle over the complete link between the Repeater and OMU
- Use APC type ODF connections
- Recommended Fibre cable is single mode 9/125
- Cable length - determined by the Remote installation plan. When calculating the cable length, take into account excess cable slack so as not to limit the insertion paths.

2.1.7 EMV Protection

CAUTION!!! If insufficient Electromagnetic Protection is provided, or if EMV measures are not taken, warranties issued by Cobham Wireless are not valid.

Connect the lightning protection

The lightning hazard to electric and electronic equipment consists in the interferences of direct lightning current infections and high surge voltages induced by the electromagnetic field of nearby lightning channels or down conductors. Amplitudes from cloud-to-earth lightning amounts to several 10kA and may last longer than 2ms. The damage caused depends on the energy involved and on the sensitivity of the electronics systems.

Ensure that lightning protection measures are taken to create a reliable repeater site. Protect all coaxial cables and power cables from the transients caused by lightning. Fit all cables with suitable lightning protection devices.

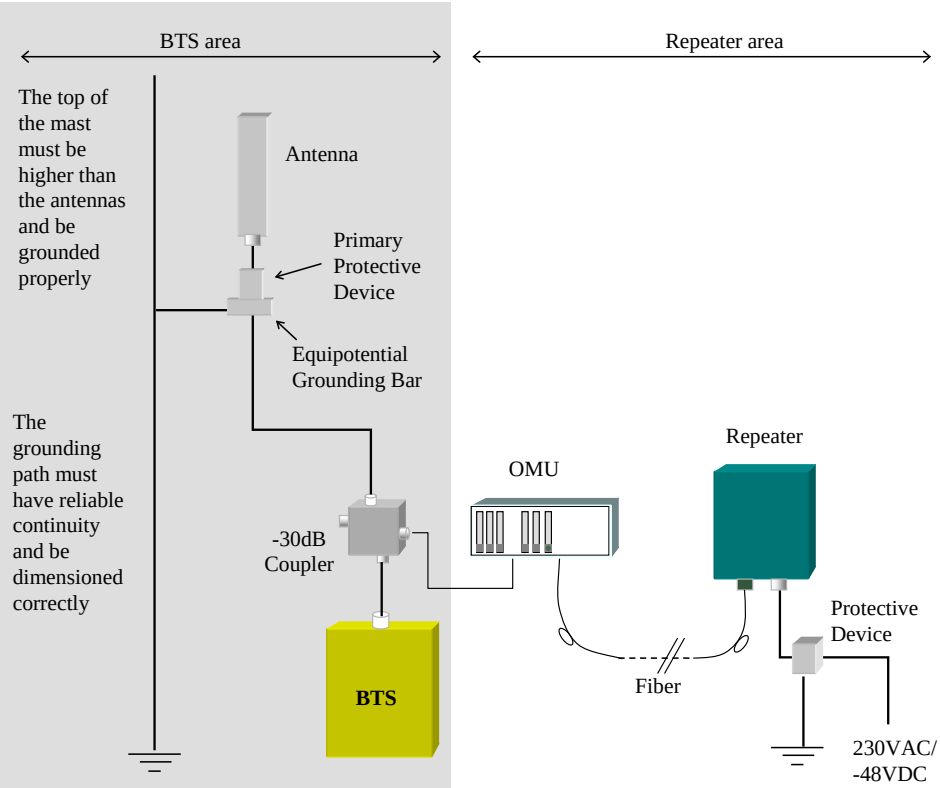

Figure 2-1: Example of EMV protection for a repeater system

For detailed information please refer to IEC 61024-1 and 61312-1 for international standards for protection of information systems against LEMP (Lightning Electromagnetic Pulse), including radio transmitters. They define proper planning, installation and inspection of effective lightning protection systems.

The Cobham Wireless repeaters comply with the EN standard ETS 301 498-8 which stipulates demands on lightning/surge protection for typical infrastructure telecom equipment installations.

Several lightning protection devices should be used in series with declining threshold voltages to help attenuate the pulse component which makes it through the first layer of protection.

The primary protective device is part of the site installation and is not supplied by Cobham Wireless. Coaxial lightning protection is normally one of these three types: Gas capsule, High-pass and Bandpass.

There also need to be a protective device installed on the power supply cord.

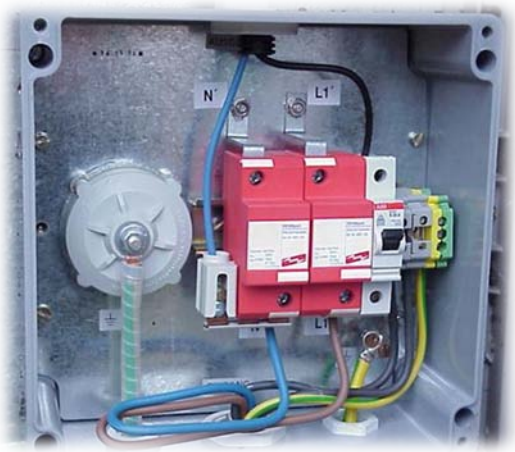

Figure 2-2: Protective device installed in connection with the power supply

2.1.8 External Alarm and Relay Considerations

For installations that include connections of external alarms and relays

- The connector plinth for the external alarms is located inside the repeater.
- The strain relief fitting in is a Pg 13.5 suitable for a 6-12 mm cable diameter.
- Four external alarm sources can be connected to the repeater.
- Alarm operating voltage: between 12 and 24VDC.
- The relay supplies 100mA maximum current

2.1.9 Location Criteria

Location criteria

- **For wall mount installations:**
  - **Wall compatibility -** check the suitability of the wall on which the unit is to be to be fitted.
  - **Plan mount -** check the actual fixing centers (see below) and overall dimensions of the unit enclosure. The unit is supplied with two wall mounting brackets; when the unit is mounted on these brackets adequate ventilation is provided between the unit and the wall to which it is fixed.
- **Plan connection cable clearances -** the Optical, RF and power connections located on the underside of the unit will need at least 300mm vertical clearance below the unit to enable the connections to be made. The minimum bend radius for Optical and RF cables must not be less than the recommendations made by the cable manufacturer. Plan the cable runs and ensure adequate space is available.
- **Allow for door opening** - ensure that there is sufficient space at the front of the unit to allow the door to be fully opened and for maintenance engineers to get access to the unit with test equipment such as a spectrum analyzer. Allow an additional 500mm of space in front of the unit when the door is fully open.

- **Allow for heat dispersion -** Mount the repeater so that heat can be dispersed from it.

  The repeater wall mounting kit ensures an optimum airflow between the wall and the repeater.) Do not block this air channel as it will cause the MTBF of the repeater to drop dramatically, or even in the worst case cause the repeater to fail completely.

  If possible, use a wall in the shade to minimize the overall sun loading. If sufficient shielding cannot be obtained, an additional sun shield should be mounted.

Figure 2-3: Example of a sun shield

2.2 Standard Repeater Installation

This section describes the installation of repeaters that *do not* include a fan-hood assembly (section 2.3) or consist of a Master/Slave (five service) configuration (section 2.4). The installations of repeaters with fan assembly or installed in a Master / Slave configuration are described in the corresponding sections.

2.2.1 Overview

The standard repeater installation consists of the following steps.

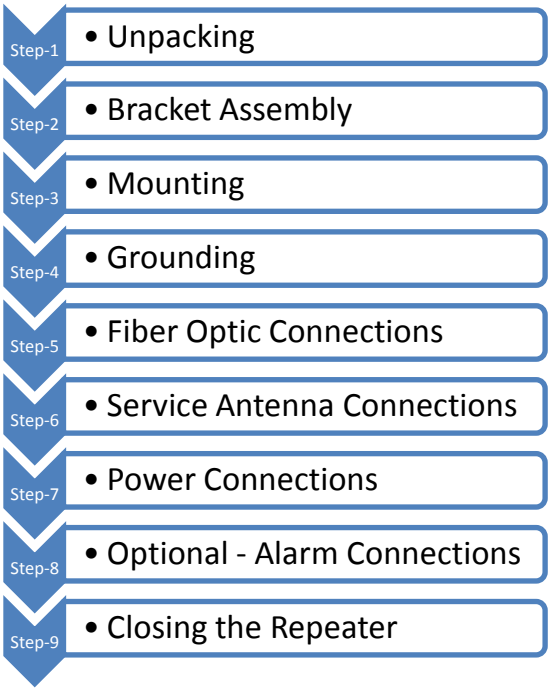

Figure 2-4 Standard Physical Installation Overview

2.2.2 Unpacking and Accessories

Upon receiving the MBF-40 Repeater perform the following:

1. Examine the shipping container for damage before unpacking the unit.
2. Perform a visual inspection to reveal any physical damage to the equipment.
3. Verify that all of the equipment (listed below) is included. Otherwise contact Cobham Wireless. The MBF-40 Repeater is shipped with the following equipment:

Accessories Package Contents

X1 CD	For OMU II and MBF Variants EMEA/Americas Contains User's Manual and USB driver
X1 Quick Installation Guide	Power Terminal wiring instructions
X2 Mounting Brackets	Identical brackets - used for wall mount and for rackmount
Bracket to repeater assembly items:	X4 M8 Bolts X4 M8 Springs Washers
Drill Template	Used for drilling holes in wall
Additional items attached to enclosure:	Enclosure key Allen Hex key

2.2.3 Rack Mount Installation

The supplied brackets are used to mount the repeater either on a wall or in a 19" rack. The same brackets are used for both medium and high-power repeaters. *For high-power repeaters with a fan-hood assembly, the fan-hood assembly instructions are given in section 2.3.*

IMPORTANT!!

- The weight of the unit requires that two people mount the unit onto the rack.
- The signal booster must always be installed vertically with the connectors on the underside for protection. *Horizontal installation on a bench for long time may cause damage to the signal booster due to over-heating.*

To mount the repeater in a rack

1. Use the x4 (provided) **M8 Fixing Bolts** and **X4 Spring Washers** to assemble the brackets as illustrated below.

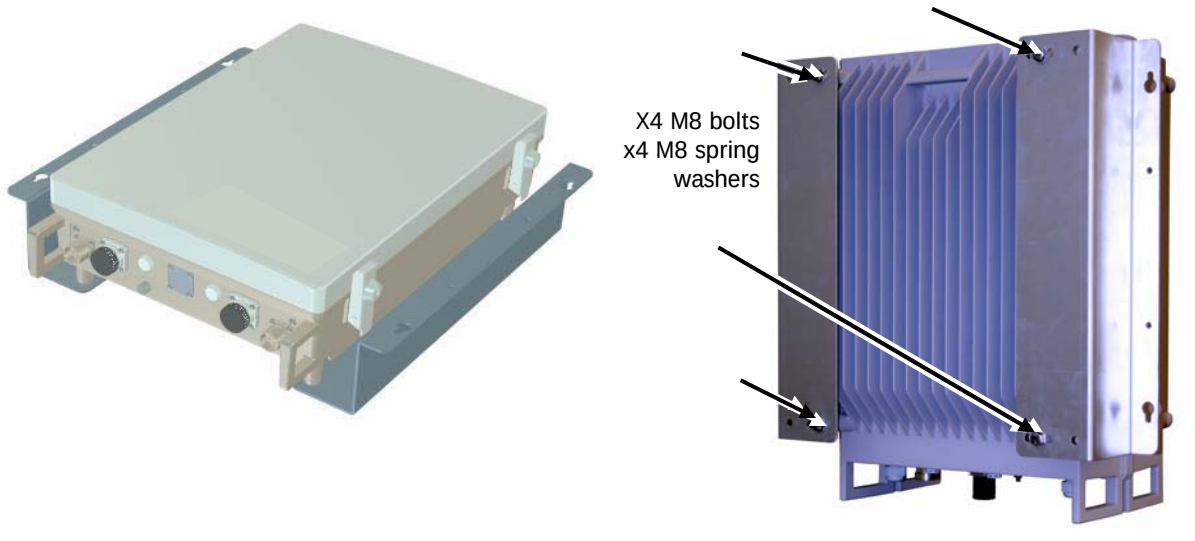

Figure 2-5: Rack-mount bracket position

2. Mount the repeater *vertically* in the rack, while adhering to standard rack mounting procedures, and secure.

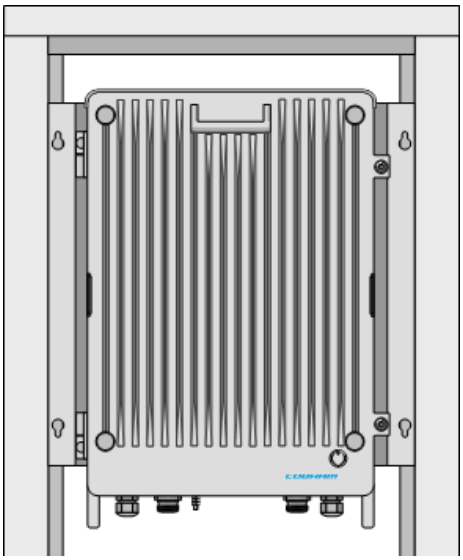

Figure 2-6: Rack-mount Repeater position

2.2.4 Wall Mount Installation

IMPORTANT!!

- The repeater mounting procedure is for concrete or brick walls only.
- The weight of the unit requires that two people mount the unit on the wall.
- The signal booster must always be installed vertically with the connectors on the underside for protection. *Horizontal installation on a bench for long time may cause damage to the signal booster due to over-heating.*

2.2.4.1 Wall Mount Bracket Assembly

NOTE: In addition to the mounting brackets, it is recommended to use additional fixings as described in section 2.2.4.4.

To assemble the brackets

1. Determine the location of the Repeater on the wall according section 2.1.9.
2. Assemble the brackets to the Repeater using the supplied 4 x M8 bolts and Spring Washers as shown in the following figure.

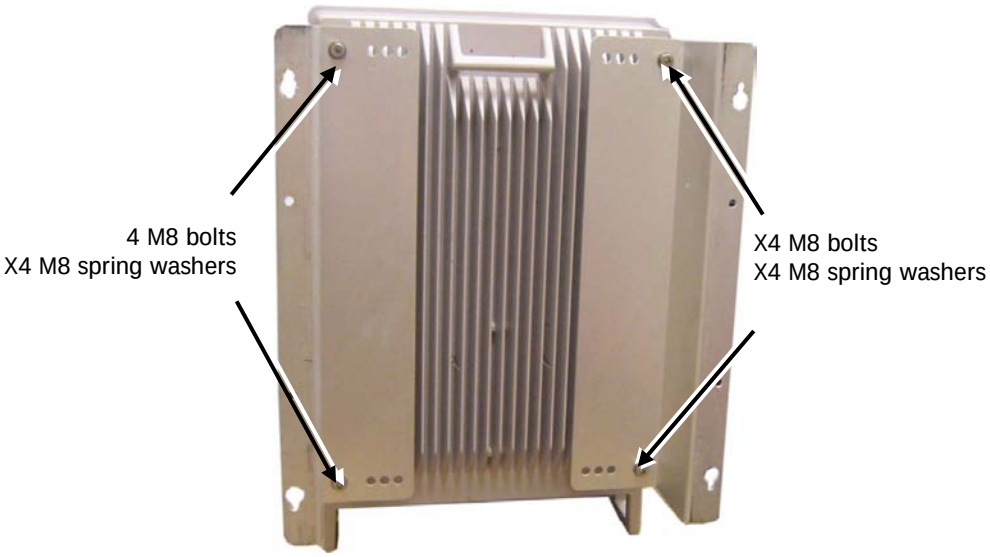

Figure 2-7. Position of Brackets for Wall mount

2.2.4.2 Wall Marking and Drilling

WARNINGS!!

- Due to the weight of the Repeater, it is NOT recommended to fix to a hollow wall).
- The Repeater wall mount brackets assembly should be fixed to a solid wall (these include brickwork, block work, and concrete).
- Always check that there are no pipes or cables hidden in the wall beneath the area to be drilled. Various pipe and cable detectors are available for this type of inspection.

- To provide secure fixing to a solid wall, the most common method is drilling and plugging. The size of fixing is dependent on the item to be fixed and the nature of the wall, The Repeater should be fixed with mild steel, M6 (50mm to 75mm) rawlbolts or similar.
- Care must be taken to ensure the alignment of the four fixings. A spirit level or plumb line should be used to ensure horizontal/vertical alignment.

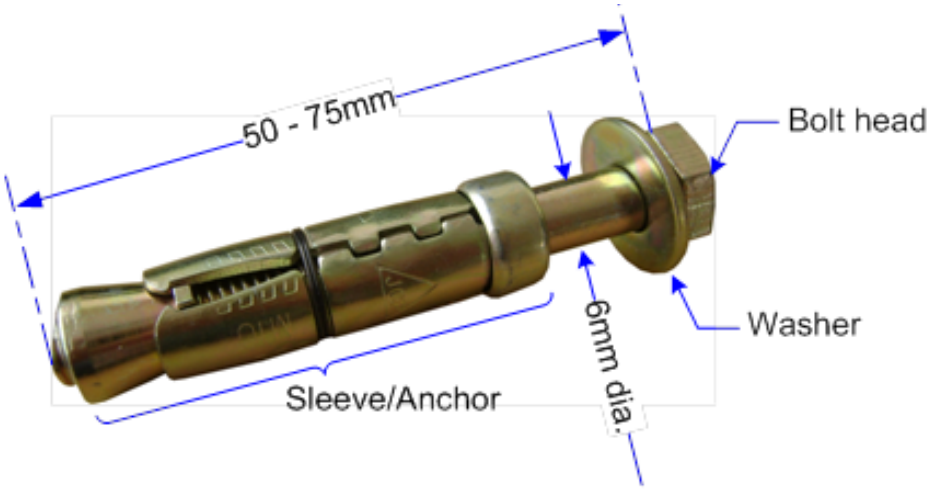

Figure 2-8: M6 Rawlbolt – recommended for wall mount.

To mark and drill the wall

1. Using the provided *drill template*, mark out the fixing centers of the repeater on the chosen wall. The repeater dimensions are shown below.

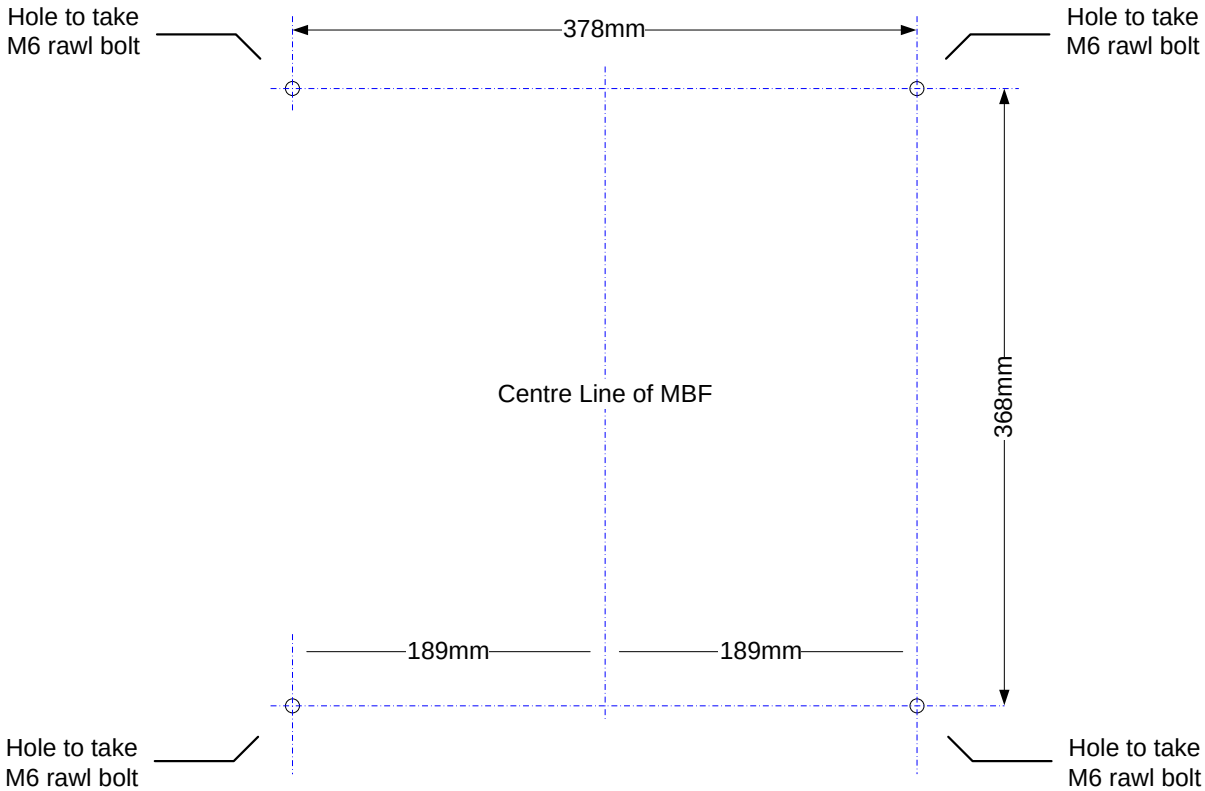

Figure 2-9: Fixing Centers

2. Mark and drill the wall with the correct size masonry bit as specified by the fixing manufacturer.

   NOTE: It is good practice to wear goggles to protect your eyes from flying debris when using power tools.

3. Hold the drill bit against the mark and begin drilling slowly so that the bit does not wander from the position. The wall should be drilled to a depth which is sufficient to accommodate the full length of the fixing.
4. Insert the fixings so that the top of the sleeve/anchor section is level with the wall surface.
5. Gently tighten the bolt by hand so that the anchor section of the fixing expands and grips the inside of the hole.

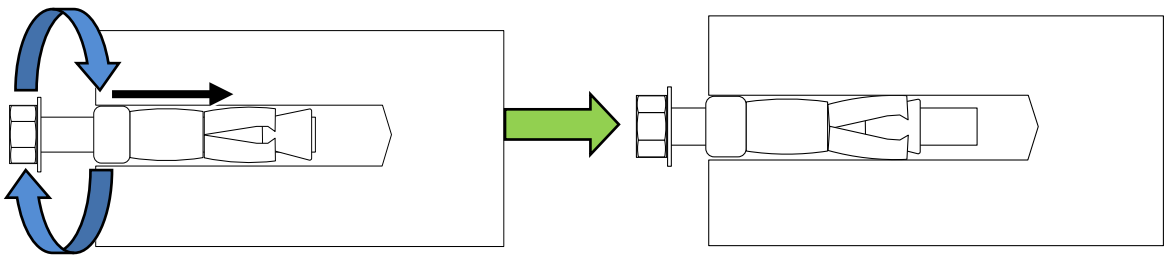

Figure 2-10: Inserting Fixing and Tightening.

6. As the bolt pulls its way in, the sides of the anchor section are forced outwards, gripping the surrounding surface.

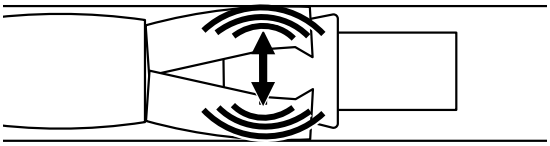

Figure 2-11: Anchor Sides Pushed Outwards.

7. Once all four fixings are in place, carefully withdraw the four bolts.

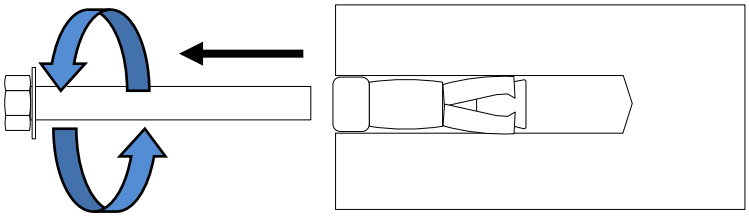

Figure 2-12: Withdraw Bolts.

2.2.4.3 Mount the Repeater

CAUTION!! It is recommended that two people lift the repeater since (depending upon the configuration) the repeater weighs between 20 and 38 kg (44 and 84 lb)

To mount the repeater

- Align repeater with the four fixings. Great care should be exercised here as the repeater is very heavy. (A suitably rated heavy duty scissor lift table/trolley may be suitable for this operation.)
- Once repeater is held in the chosen position, carefully insert the fixing bolts through the mounting lugs of the Repeater and into the sleeve/anchor sections of the fixing in the wall and tighten the bolts.
- ***The repeater needs to be mounted tightly to eliminate vibration.***

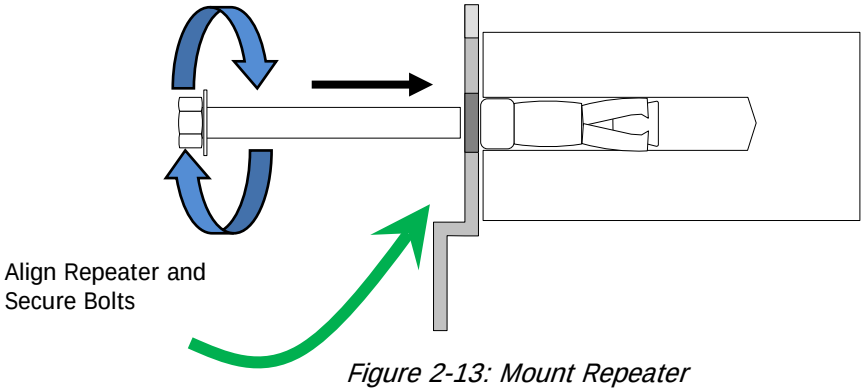

Figure 2-13: Mount Repeater

2.2.4.4 Recommended Additional Fixing

ATTENTION!! It is the installer's responsibility to ensure the repeater is installed in a secure manner.

Suggested precautionary measure:

- A bracket is provided to securely mount the repeater on the wall; however, as an ADDITIONAL precautionary measure, it is recommended to further secure the repeater to the wall (in addition to the bracket).
- This can be done using any appropriate method.

The following figures provide *examples* of additional fixings. In the examples, support is provided in the form of a cable harness loop that is looped around the repeater handle and secured to the wall or part of the building support structure.

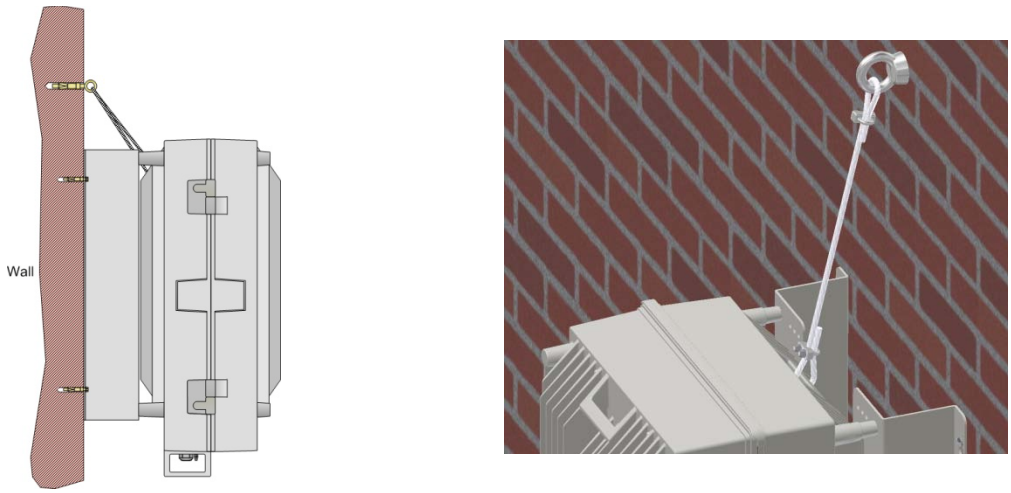

Figure 2-14: Example 1 – Additional Fixing to Wall

Another example is of a repeater installed on a stadium gantry. Again, the support can be in the form of a cable harness loop, using the handle of the repeater and part of the gantry structure.

ATTENTION!! Any other SECURE method can be used.

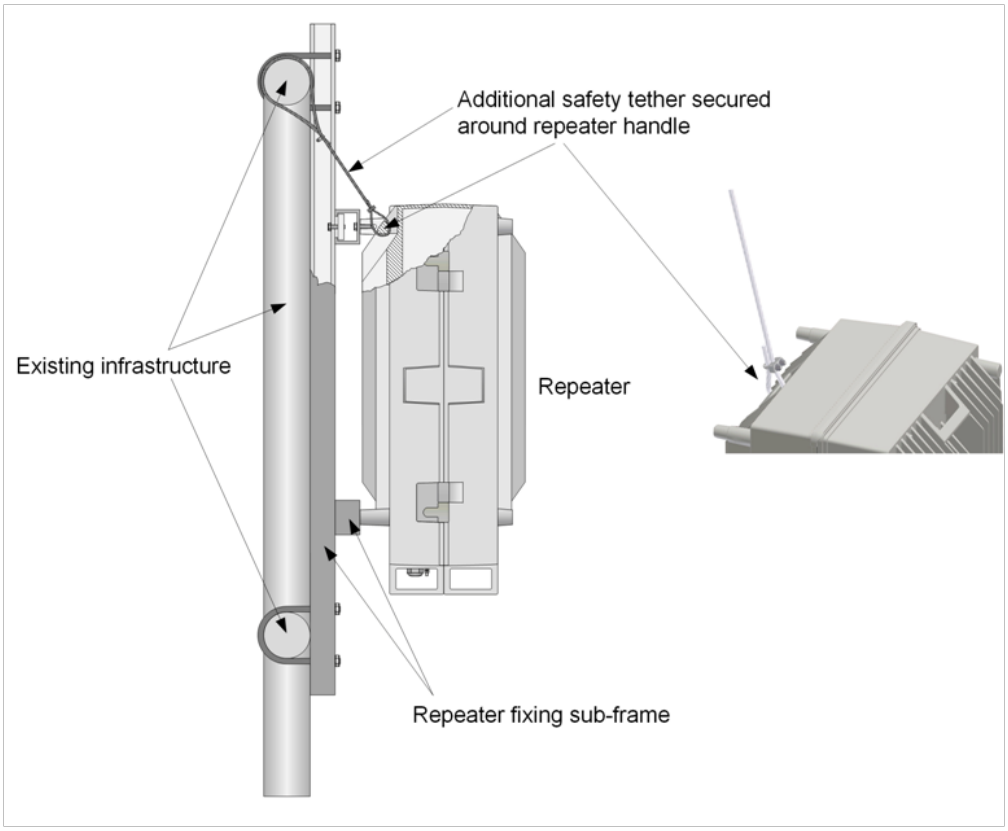

Figure 2-15: Example 2 – Additional Fixing to Gantry

2.2.5 Grounding

WARNING!!!

- Do not use the repeater grounding bolt to connect external devices.
- For Dual Unit assemblies (five frequency band support), ground **both** units.

To ground the repeater

- Refer to the grounding requirements described in section 2.1.4.
- Connect the grounding protection to the repeaters ground lug.

Figure 2-16: Grounding the MBF-40

2.2.6 Optic Fibre Connection

Refer to the Fibre Optic installation guidelines described in Appendix C., This product is equipped with **Class 1 Lasers**, as per definition in EN 60825-1.

CAUTION!!!
Un-terminated optical receptacles may emit laser radiation.
Do not stare into beam or view with optical instruments.

WARNINGS!!
Maximum input power should not exceed (zero) 0 dBm
Clean the Fibre connectors (receptacles and cables) before connecting. See Appendix C – F/O Cleaning Procedure for details on F/O cleaning procedures.

To connect the optic fibre

1. Refer to the optic fibre requirements and connection guidelines described in section 2.1.6.

2. Open the repeater door.

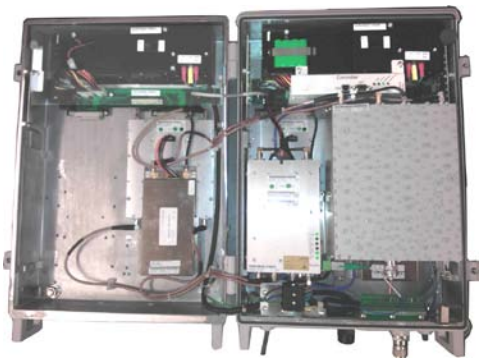

Figure 2-17: Example of Dual Power Supply Model

3. Run the Fibre through a corrugated sleeve (not supplied).

   NOTE: For MIMO models, route both Fibres through the same sleeve.

Figure 2-18: Run Optic Fibres through Sleeve

4. Route the optic cable(s) via the optic hose fitter on the front panel.

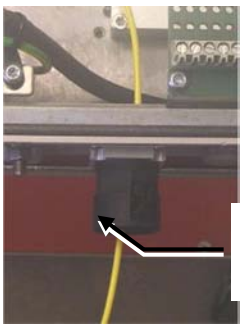

Figure 2-19: Route Optic Fibre(s) via the Fibre Input

5. Connect the Fibre(s) to the Fibre Optic Converter inside the repeater.
   - For MIMO MBF-40, connect two fibres to the two optic converters installed in the repeater. See Figure 2-21: MIMO Dual F/O Connection.
   - Make sure the Fibre is not bent too sharply inside the repeater as to avoid communication disruptions.

Single F/O Connector

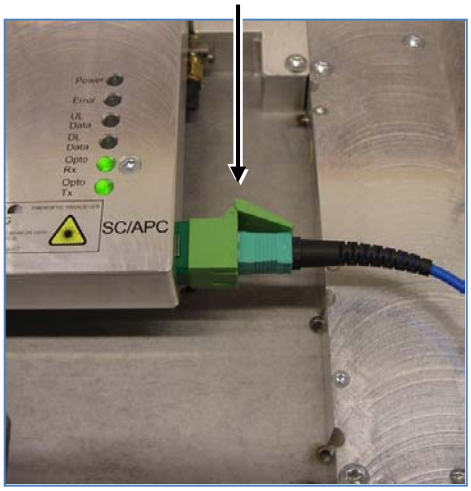

Figure 2-20: Single F/O Connection

Dual F/O Connectors

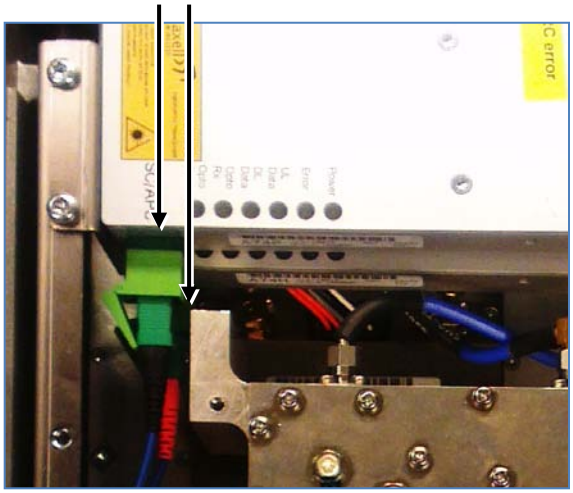

Figure 2-21: MIMO Dual F/O Connection

6. Place the Fibre(s) in the rubber seal (for MIMO, run both Fibres in the same rubber seal).

   NOTE: The sleeve (not supplied), together with the rubber seal, meets the protection standard IP65/NEMA4.

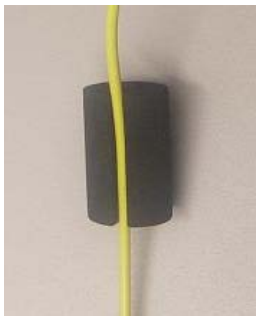

Figure 2-22: Run Fibre in the Rubber Seal

7. Adjust the Fibre(s) length inside the repeater and insert the seal into the Fibre inlet.

Figure 2-23: Adjust F/O Length

8. Attach the sleeve to the Fibre optic inlet. *This completes the procedure.*

Note: Clean the Fibre connector before connecting it to the system. See instruction in Appendix C – F/O Cleaning Procedure.

Figure 2-24: Connect Sleeve

2.2.7 Service Antenna Connections

Depending on the repeater model, connect either one or both Server antennas to the Repeater DIN 7/16" server antenna connection.

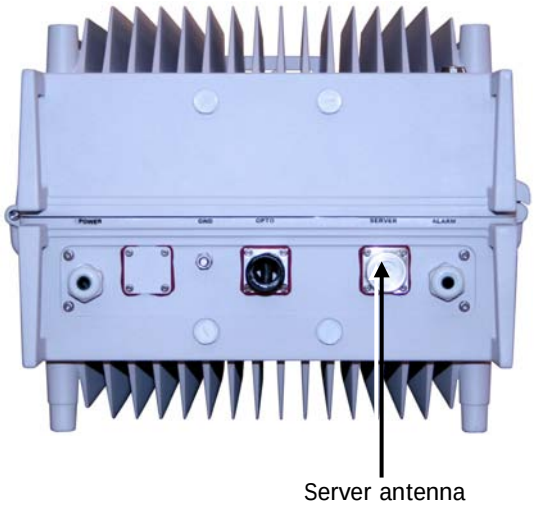

Figure 2-25: Single Service Antenna

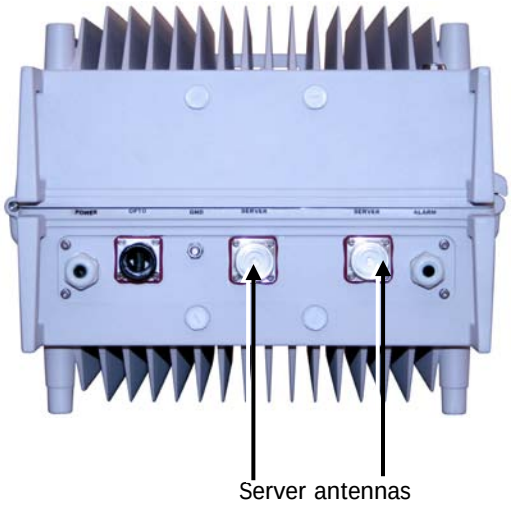

Figure 2-26: Dual/MIMO Service Antenna

2.2.8 Power Connections and Power On

This section describes how to connect the power source to the repeater and power on the repeater. This section also provides information about the backup battery pack.

2.2.8.1 Power Connections

CAUTION!!

- Make sure the antenna cables or 50 ohm terminations are connected to the repeater's antenna connectors before the repeater is turned on.
- Be sure a CIRCUIT BREAKER meeting the instructions given in section 2.1.5.1 is connected near the unit at an easily reachable and accessible location from the unit.
- Be sure the POWER SOURCE TO THE REPEATER IS DISCONNECTED before connecting the power wires to the repeater power plinth.
- Please be aware that the equipment may, during certain conditions become very warm and can cause minor injuries if handled without any protection, such as gloves.

Note the following:

- **For dual power supply models -** in dual power supply models, the two power supplies are installed and both are active at all times. The power supplies are interconnected internally – *both* power supplies are activated by a single power connection. The required power wiring and circuit breaker does not differ from the single power supply models.
- **For -48VDC models** - the -48VDC version of the power supply is designed to turn off if the supply voltage falls below -36V (±1V), not to drain the feeding battery. It will turn on again as the supply voltage reaches -43V (± 1V).

To connect the power cables

1. Refer to the power requirements as described in section 2.1.6.
2. Open the repeater door.
3. According to the repeater model, route the power cable through the power interface and towards the power plinth.

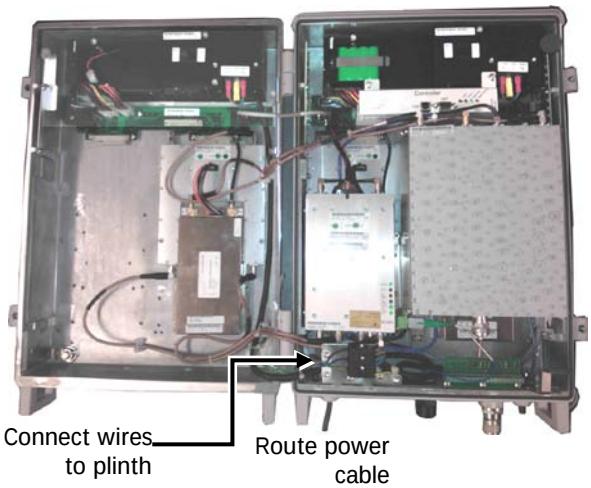

Figure 2-27: Example of Dual Power Supply Model

4. **-48VDC,** connect wires to the plinth as follows:
   - **Phase** linked to **brown** cable
   - **Neutral** linked to the **blue**
   - **Ground** to the **yellow / green**.

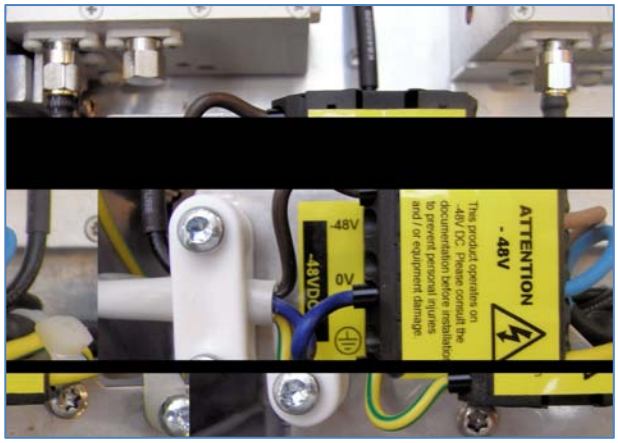

Figure 2-28: -48VDC Power Connections

5. **115 VAC** connect wires to the plinth as follows:
   - **Phase** linked to **Black** cable
   - **Neutral** linked to the **White** cable
   - **Ground** to the **Green** cable

Figure 2-29: 115VAC Power Connections

2.2.8.2 Power ON

The power supply has a switch which allows it to be set in two positions:

- ON – repeater is operational
- STAND-BY - the repeater is still connected to the power supply but not operational.

CAUTION!! Make sure the antenna cables or 50 ohm terminations are connected to the repeater's antenna connectors before the repeater is turned on.

To power on the repeater

1. Locate the power supply switches inside the repeater.

Figure 2-30: Example of Single Power Supply Model

Details on the next page….

NOTE: For dual power-supply repeaters, both power supplies must be on.

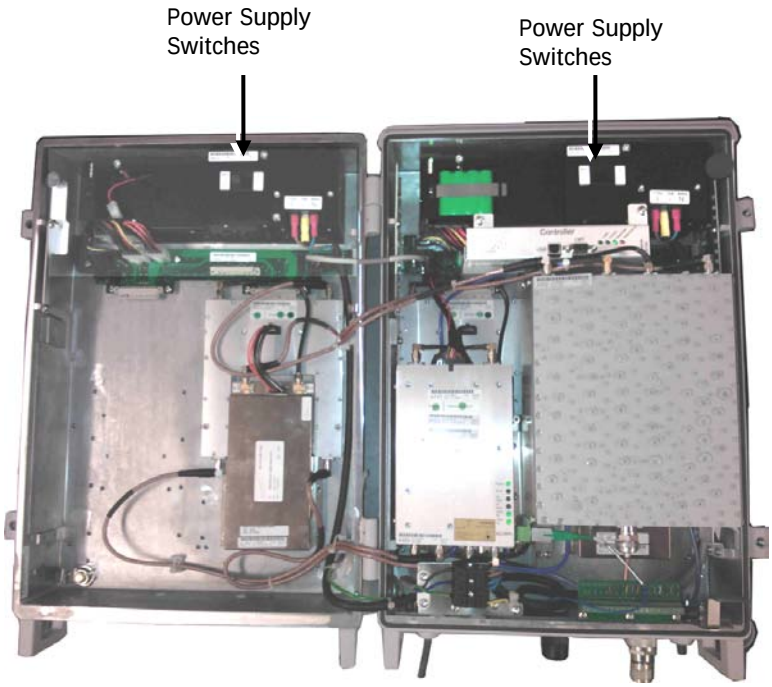

Figure 2-31: Example of Dual Power Supply Model

2. Switch on the **Power Switch**.
3. Switch on the **BATT** power.

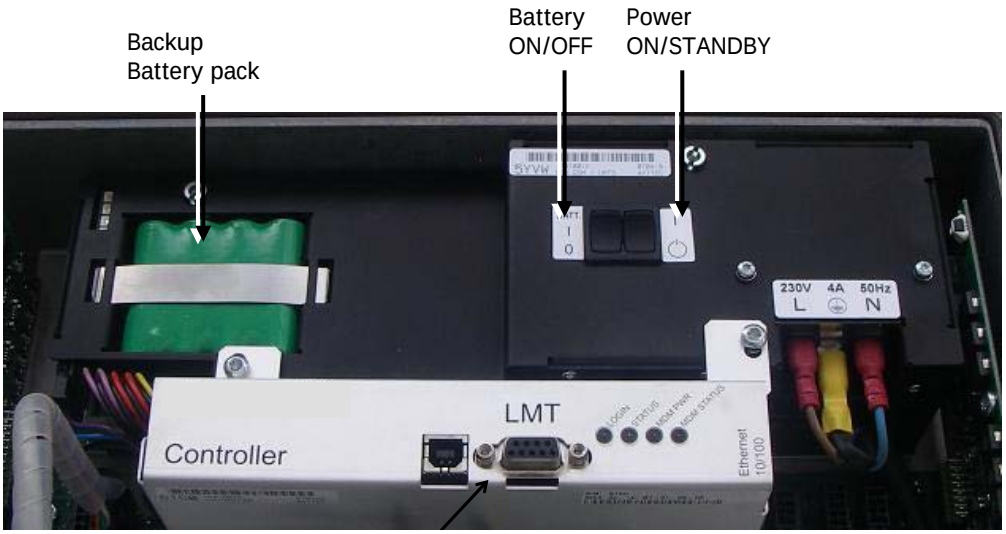

Figure 2-32: Power and Battery Switches

4. Referring to section 6.3, verify the LEDs from the following modules are indicating correct operation:
   - Control module
   - F/O converter(s)
   - Power supply module(s)

2.2.8.3 About the Backup Battery

- On the Power Supply unit a rechargeable battery pack in mounted. This part also includes charging and supervision electronics.
- The backup battery will provide the Control Module with enough capacity to send an alarm in case of input power failure.
- The battery can be switched on and off. The switch is placed adjacent to the main power switch on the power supply.
- At delivery the back-up battery is connected.
- The battery is replaced by lifting the battery pack out of the crate and disconnecting the cable.

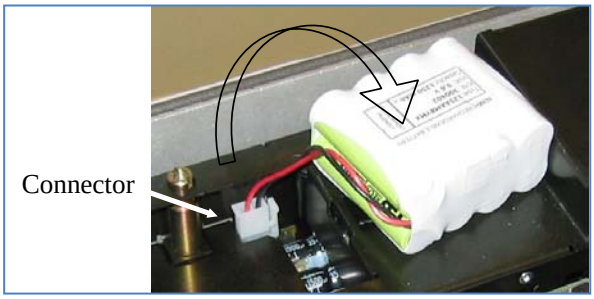

Figure 2-33: Backup Battery

2.2.9 Optional - External Alarm and Relay Connections

The connector plinth for the external alarms is located inside the repeater.

To connect external alarms or relay

1. Refer to section 2.1.8 for the external alarms and relay considerations.
2. Locate the alarms plinth inside the repeater.

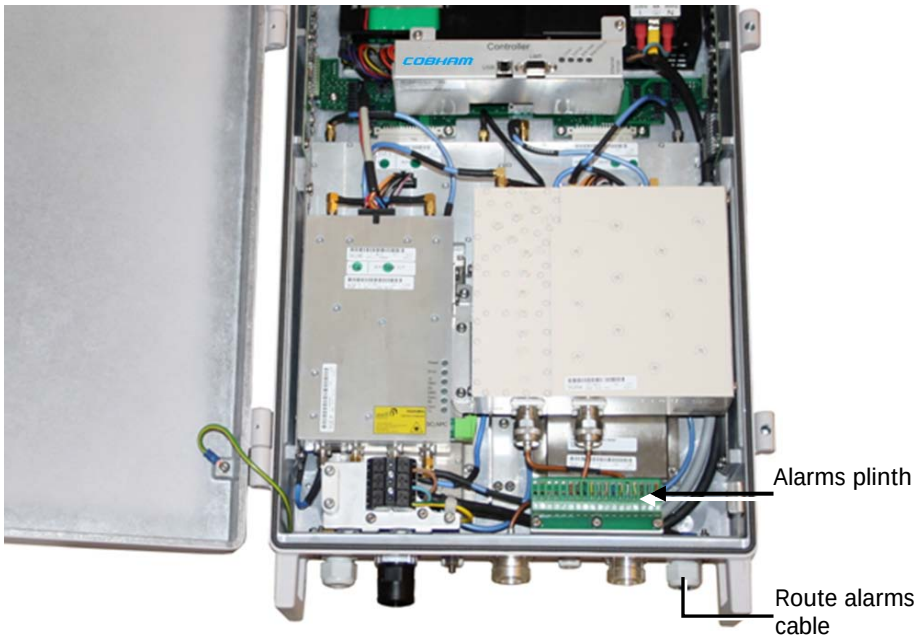

Figure 2-34: Example of Repeater Showing the Location of the Alarms Plinth

3. Connect the alarm cords to the plinth according to the pin layout below (in the standard version pins 14 – 18 are not used).

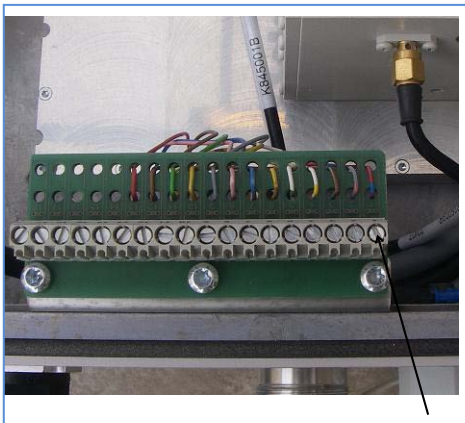

Pin #	Signal
1	External alarm 1A
2	External alarm 1B
3	External alarm 2A
4	External alarm 2B
5	External alarm 3A
6	External alarm 3B
7	External alarm 4A
8	External alarm 4B
9	Alarm +15V
10	Alarm 0V
11	Relay Output 1A
12	Relay Output 1B
13	GND
14	NC
15	NC
16	NC
17	NC
18	NC

Figure 2-35: External Alarm and Relay Pinout

Note the following

- Four external alarm sources can be connected to the repeater:
  - It is required to configure the external alarm polarity (part of the setup procedure – section 5.1.3).
  - The repeater can supply +15 VDC to an external alarm source through pin 9 and 10. The maximum allowed load is 100mA.
- Relay (pin 11 and 12) can be connected to an external device to indicate an alarm.

  The Relay Can be configured to trigger on any number of internal and external alarms. The maximum current that can be supplied is 100mA.

2.2.10 Closing and Securing the Repeater

The repeaters are secured with two hex screws (M8) and can also be locked with a key.

NOTE: The two screws must be fully tightened. Failure to do so may affect the IP65 compliancy and therefore any warranty.

Figure 2-36: Securing Single/Dual Band

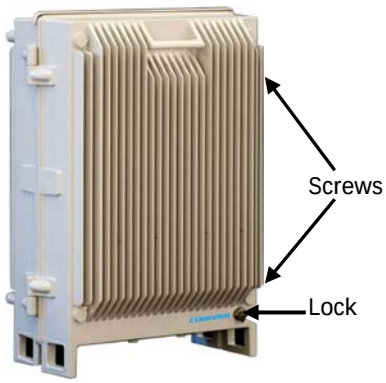

Figure 2-37: Securing Tri/Quad Band

2.3 Repeater with Fan Hood Installation

Some repeater models with power consumption exceeding 400W are supplied with a fan-hood assembly kit. This section describes the bracket and fan assemblies for the relevant repeater models.

WARNINGS!!!

- The fan modules can only be assembled on the appropriate repeater models.
- This installation requires two people.

2.3.1 Assembly Overview and Dimensions

2.3.1.1 View of the Assembled System

The following figure shows the assembled system. It includes the mounting brackets and two fan assembly units. The *dimensions*, *parts list* and *assembly instructions* are provided in the following sections.

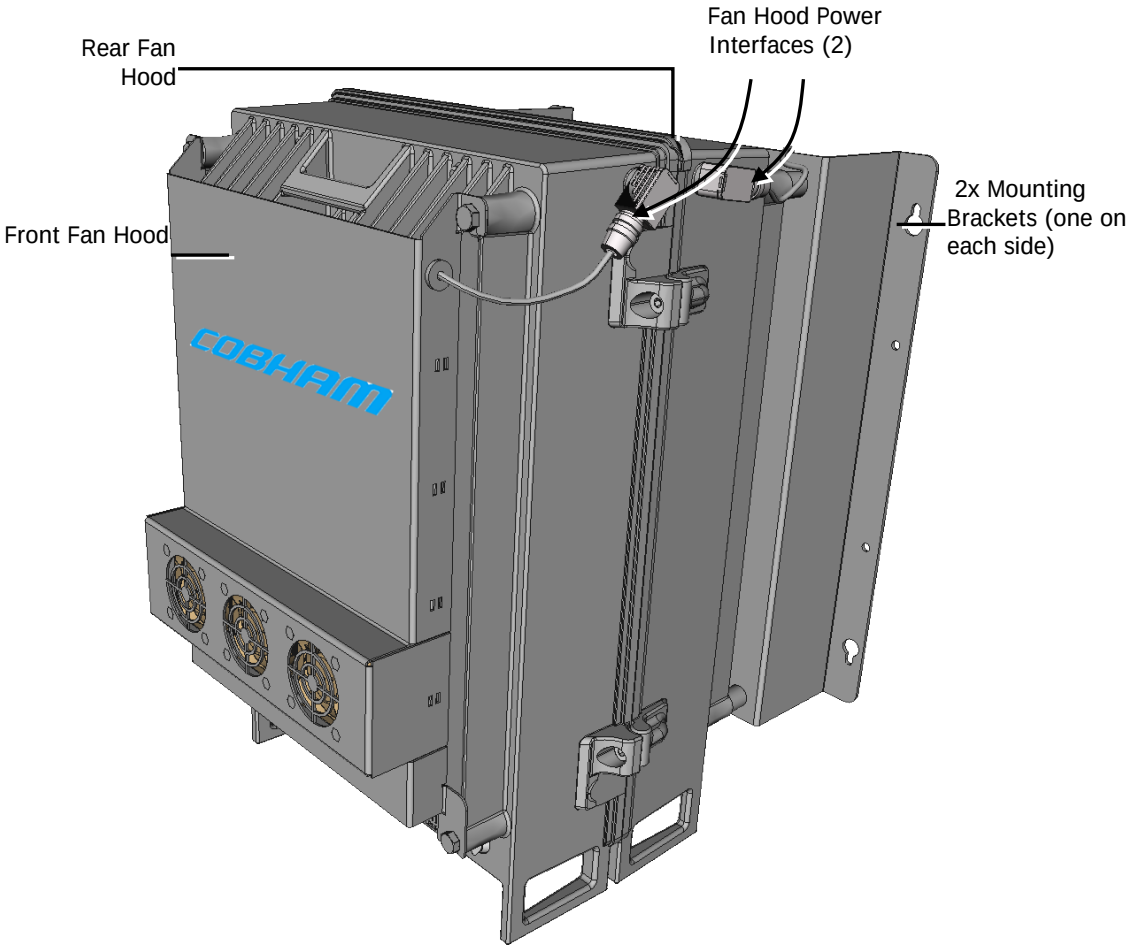

Figure 2-38: MBF-40 including Fan Hood

2.3.1.2 Assembly Dimensions

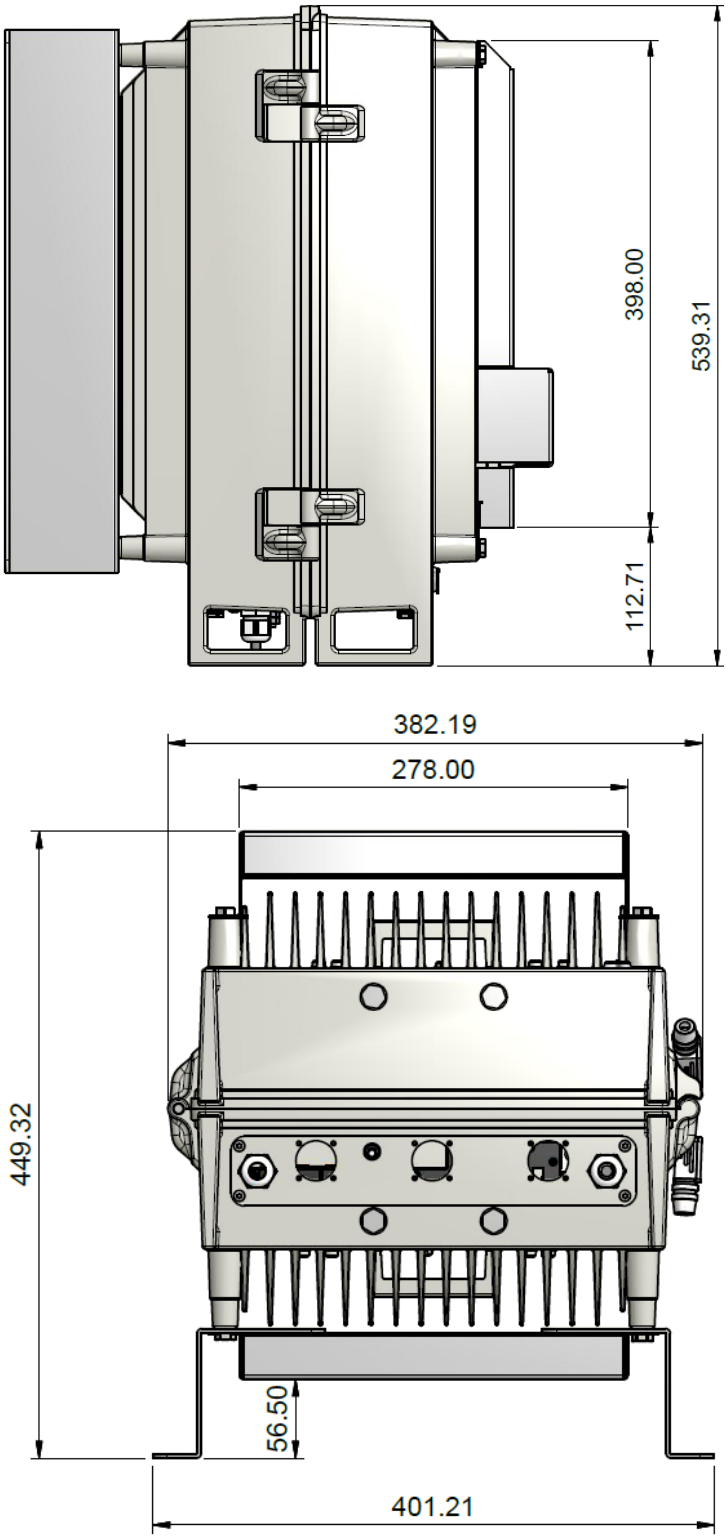

Figure 2-39: MBF-40 including Fan Hood – Assembly Dimensions

2.3.2 Physical Installation Overview

The installation of the repeater with fan-hood consists of the steps detailed below.

This section describes the packing list, brackets assembly and fan-hood assembly. The mounting and connections procedures are identical to those described in section 2.2 - Standard Repeater Installation. The latter are indicated by an asterisk (*) in the overview below.

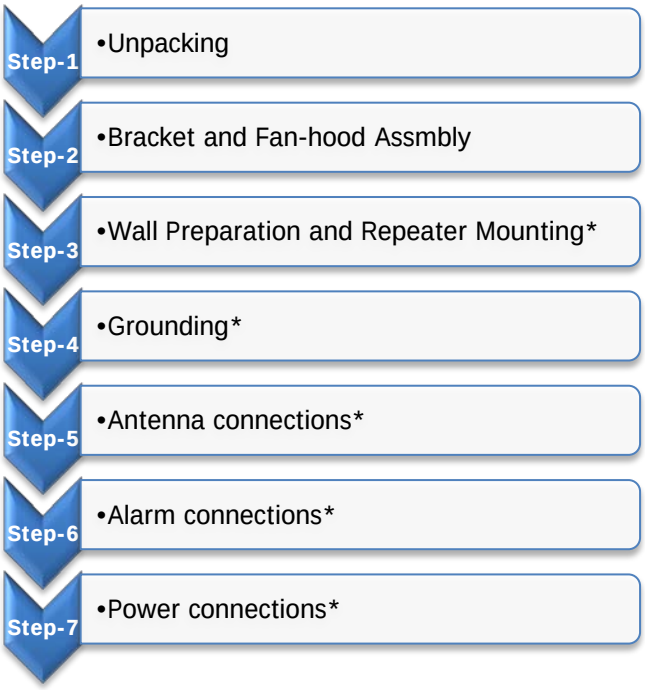

Figure 2-40 Repeater with Fan-hood Assembly Physical Installation Overview

* These steps are identical to the steps detailed in Standard Repeater Installation described in section 2.2.

2.3.3 Unpacking

Upon receiving the fanhood upgrade kit Repeater perform the following:

1. Examine the shipping container for damage before unpacking the unit.
2. Perform a visual inspection to reveal any physical damage to the equipment.
3. Verify that all of the equipment (listed below) is included. Otherwise contact Cobham Wireless. The MBF-40 Repeater is shipped with the following equipment:

Package Contents

Item	Description
X1 CD	For OMU II and MBF Variants EMEA/Americas Contains User's Manual and USB driver
X2 Quick Installation Guide	Power Terminal wiring instructions MBF-40 3-FAN Quick Installation Sheet
Mounting Brackets	2x mounting brackets
Bolts and Spring Washers	4x M8x16 bolts 4x M8 spring washers
Rear Fan-Hood and front Fan-Hood	 Rear fan hood (no edges) Front fan hood (edged)
Drill template	Used for drilling and preparing wall mount
Additional items attached to enclosure:	Enclosure key Allen Hex key

2.3.4 Bracket and Fan-Hood Assembly

WARNING!!
This Fan Hood is to be assembled only on the MBF-40 units for which it is designed and with which it is supplied.
Do NOT assemble this fan hood on any repeater models for which it is not specifically designed.
Be sure to CAREFULLY follow all instructions – beginning with Step-1.

The fan hood and bracket assembly procedure is as follows:

- Assemble rear fan hood and mounting brackets
- Mount the repeater on the wall
- Assemble the front fan hood
- Connect power to both fan hoods

To assemble the fan hood

1. Place the repeater on a flat surface, repeater ***door panel facing down***, interfaces towards you.
2. *Loosely* assemble the mounting brackets:
   - Align *innermost* bracket holes to *repeater* mounting holes.
   - *Loosely* insert bolts and washers.

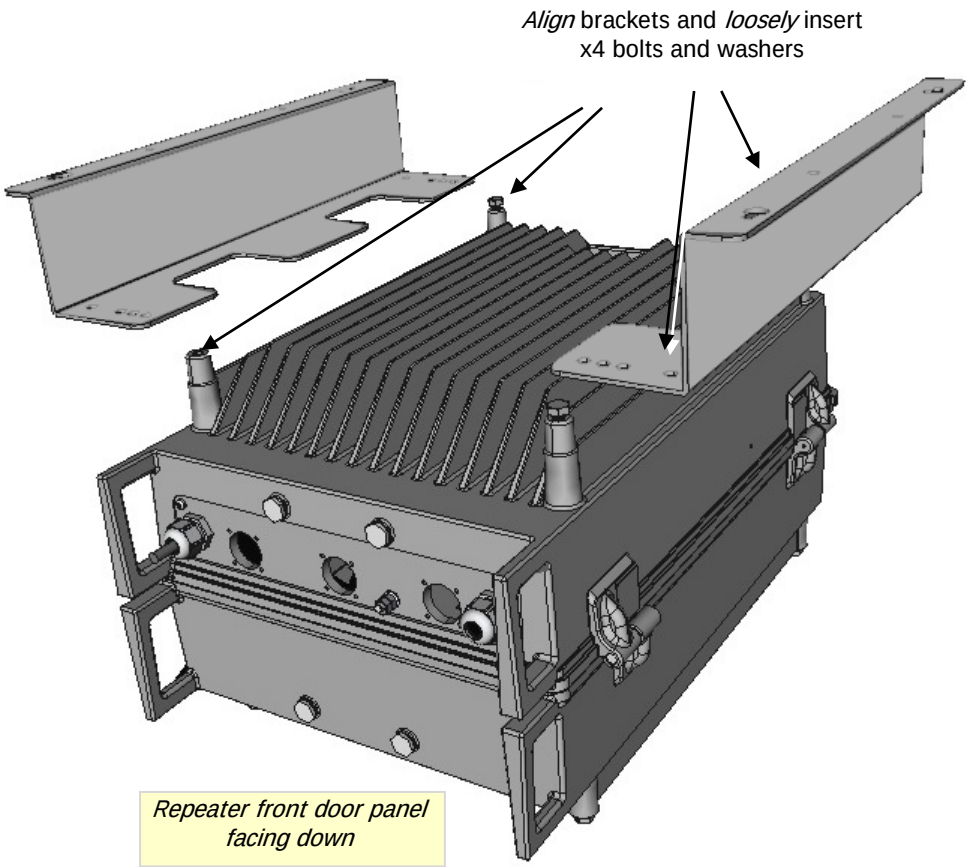

Figure 2-41: Place Brackets on top the MBF

3. Assemble Rear Fan Hood:
   - Position the Rear Fan Hood under the (inserted) bolts and washers.
   - Tighten the *four* bolts.

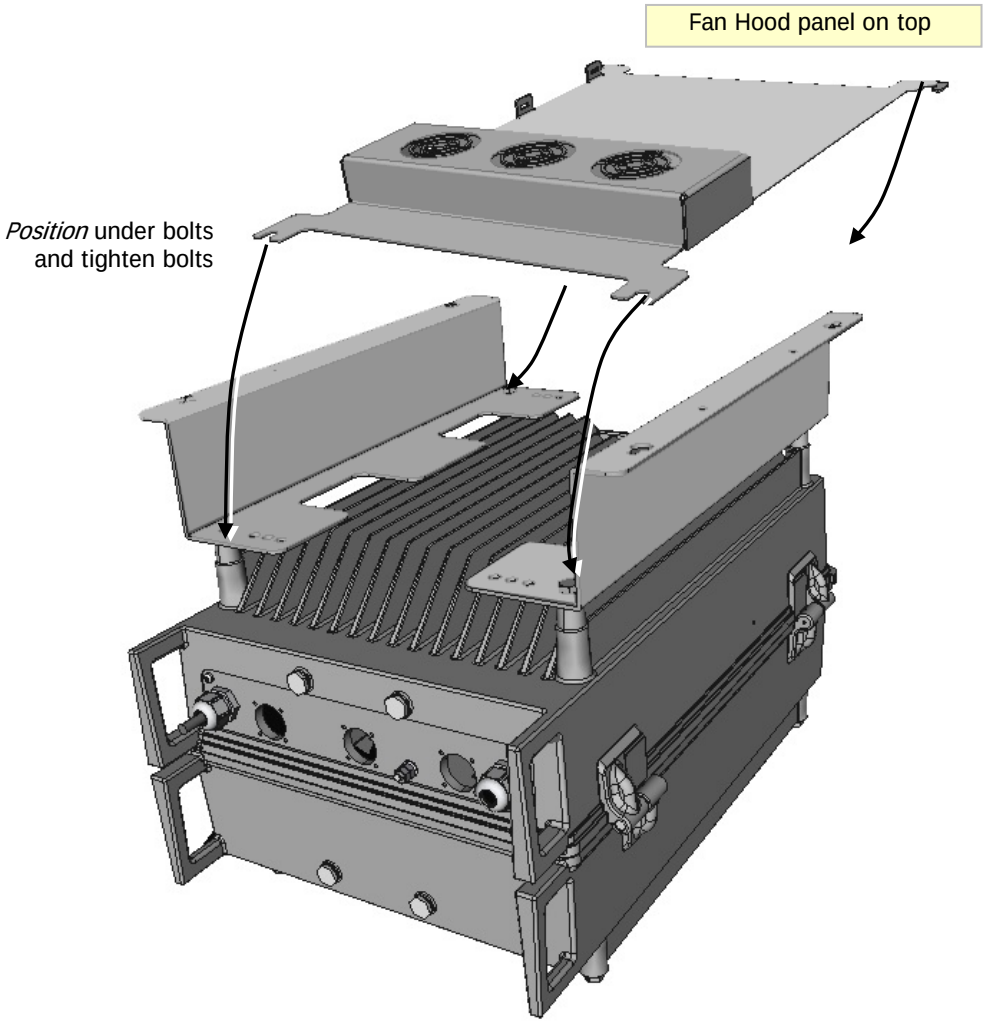

Figure 2-42: Assemble Rear Fan Hood

The brackets and Rear Fan Assembly is shown below.

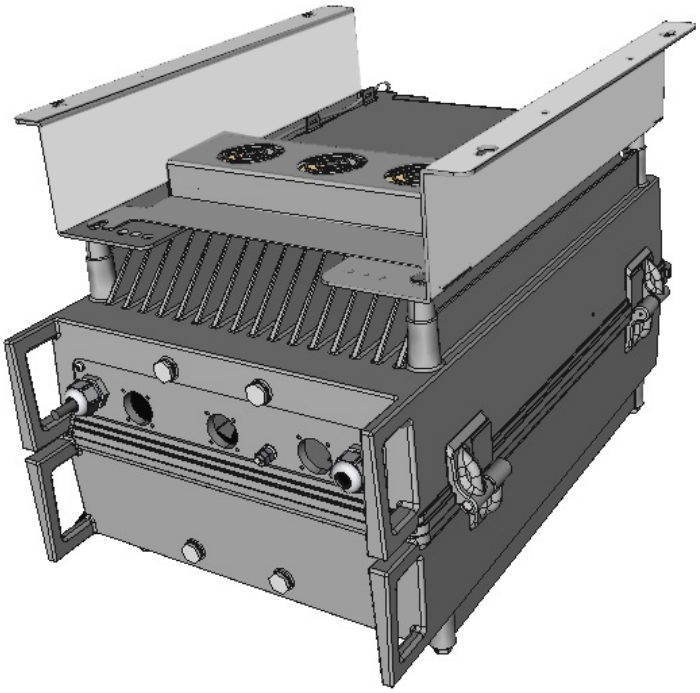

Figure 2-43: Assembled Rear Fan Hood and Mounting Brackets

4. Referring to the MBF-40 User's Manual, prepare the mounting area and hang the repeater on the wall:
   - Drill the holes in the wall.
   - Mount the Repeater.

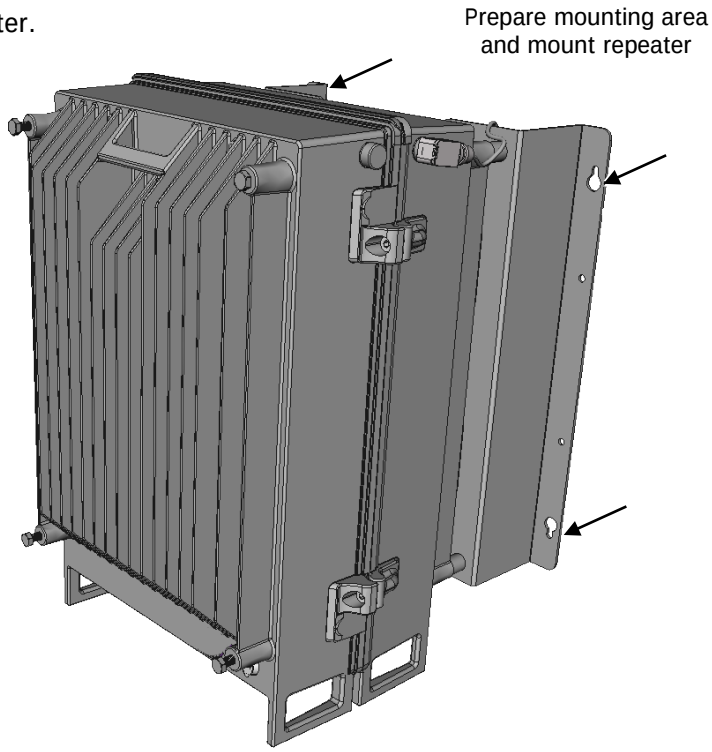

Figure 2-44: Mount the Repeater

5. Assemble Front Hood Fan:
   - Loosely insert the x4 M8x16 bolts and washers (see Figure 45).
   - Hang the Front Fan Hood on the repeater and tighten the bolts.

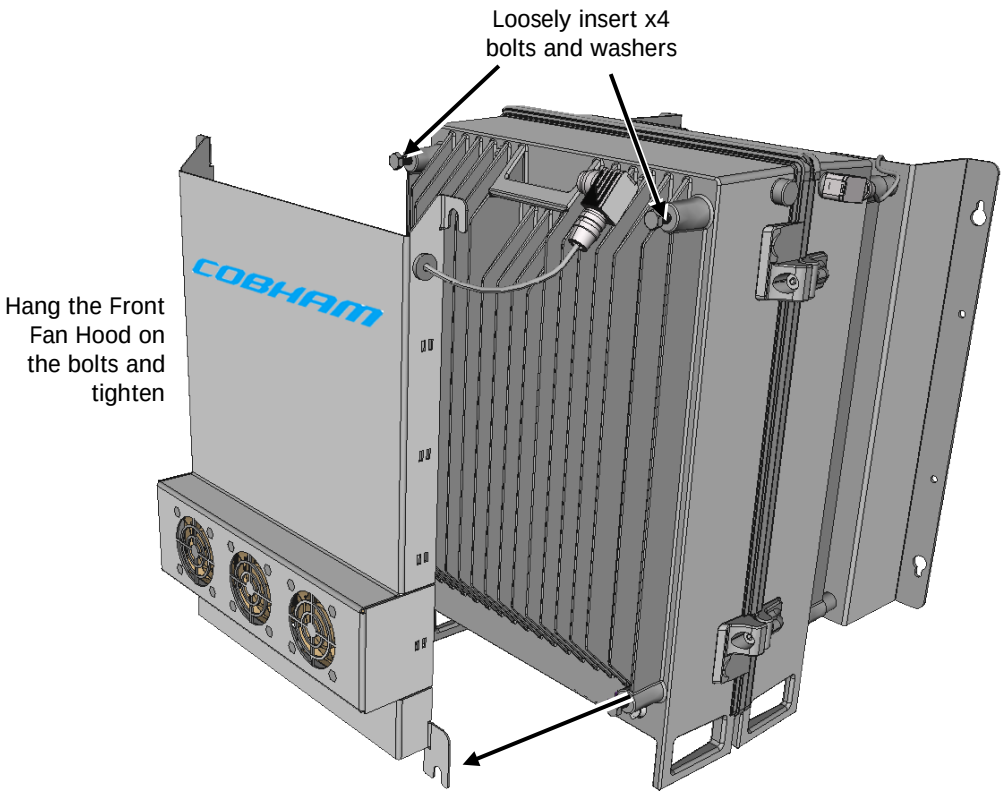

Figure 45: Insert the Four M8x16 Bolts

6. Fan Hood power connections:

   Connect the Front Fan Hood power connectors to the Repeater power connectors.

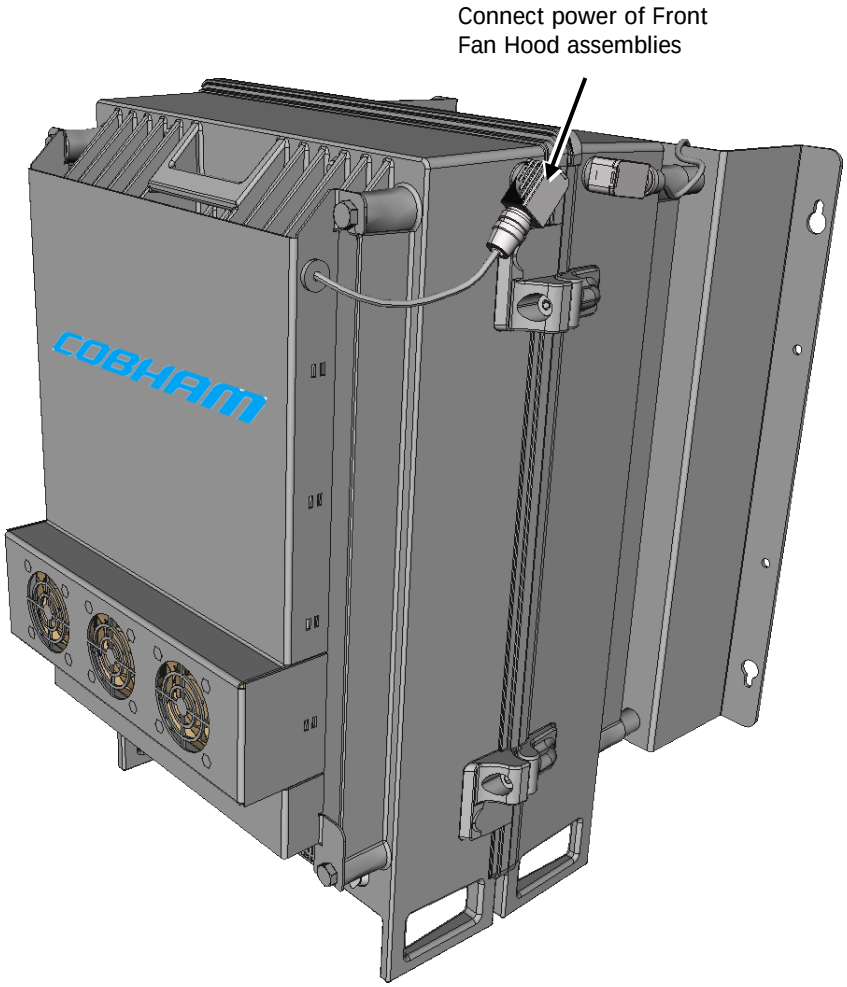

Figure 46: Front Fan Hood Power Connections

2.4 Five-Band System Installation

This section describes the *connections* for a five-band system. The 5-band system consists of two units dedicated to this application: Master MBF-40 and Slave MBF-40. All the services are routed to the Master unit via the optic fibre, where the Master and Slave are managed as a single unit via the Master connections.

The internal design and external connections of these two units are specific to 5-band System Installation and as such, are described in this section.

The procedure for assembling of the bracket (and fan-hood where relevant), as well as the wall preparation and mounting of the units is identical to procedures described in previous sections.

2.4.1 Master Slave System Cable Requirements

In addition to the items provided in the Master/Slave Repeater package, you will require the following cables for interconnecting the Master Slave units:

- x2 high power 50ohm coaxial (jumper) cables with N male connectors on both side
- x1 low loss, high quality 50ohm jumper cable with 7/16 male connectors on both side
- x1 standard straight CAT5 (or above) Ethernet cable with RJ45 connectors on both side

NOTE: The length of the cables depend on the distance that the Master and Slave units are mounted from each other.

2.4.2 Overview

The 5-band system installation consists of the following steps.

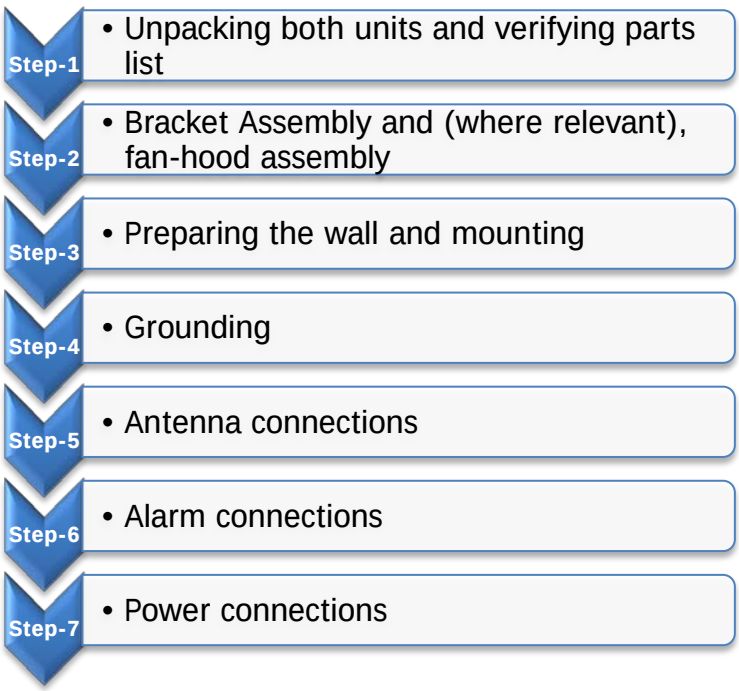

Figure 2-47 5-Band System Physical Installation Overview

2.4.3 Connecting Master and Slave Units

The following figure provides and example of a five band configuration implemented using a quad-band Master and single-band Slave.

The connections vary depending on whether external alarms are connected. The figure below shows the connections WITHOUT external alarms.

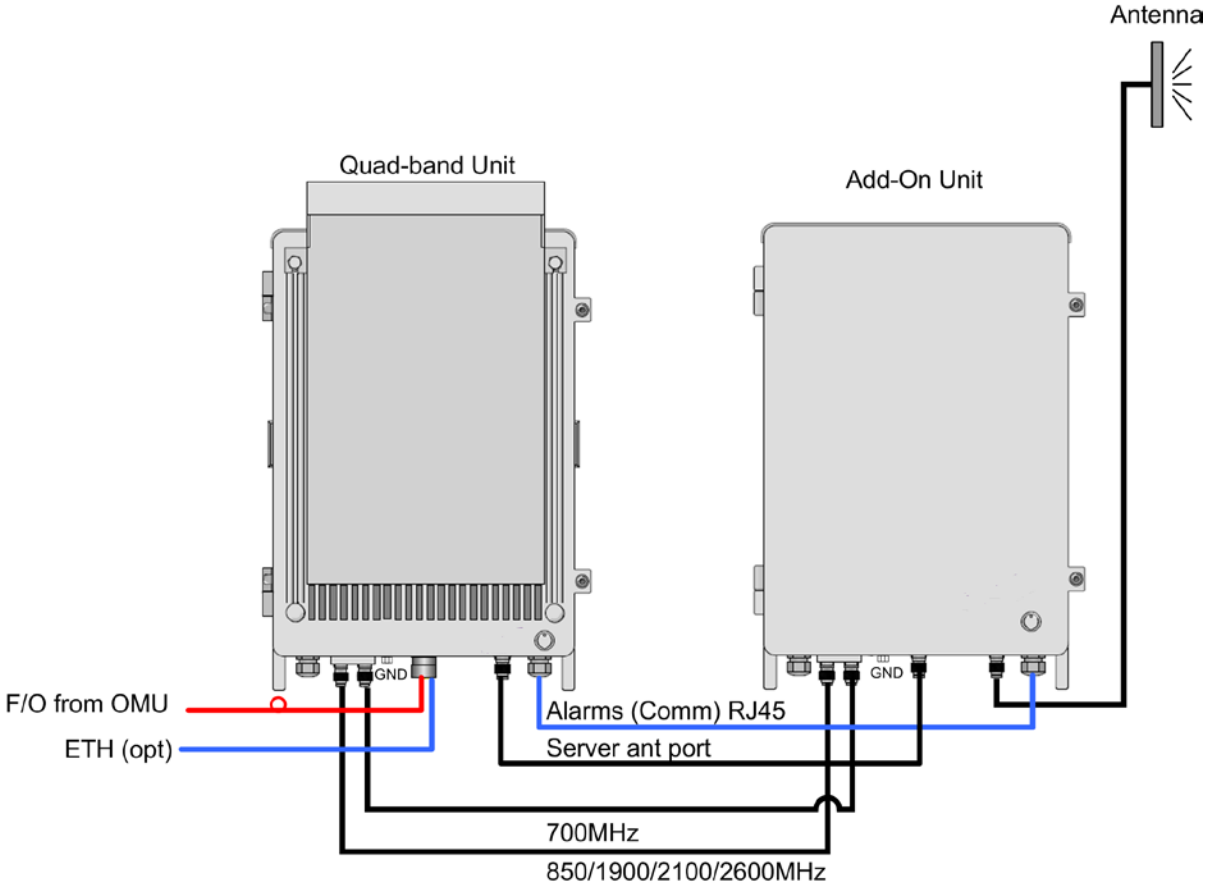

Figure 2-48: Connections WITHOUT External Alarms

To connect the Master and Slave (refer to the previous figure)

1. GND BOTH the Master and Slave units according to section 2.2.4.
2. Ensure good EMV protection according to section 2.1.7
3. Interconnect Master and Slave as follows:
   - 2 high quality 50ohm coaxial (jumper) cables with N male connectors on both side
   - 1 low loss, high quality 50ohm jumper cable with 7/16 male connectors on both side
   - 1 standard straight CAT5 (or above) Ethernet cable with RJ45 connectors on both side

MASTER Port	SLAVE Port	Description	CABLE Type (section 2.4.1)
SERVER	LINK INPUT		Jumper cable with 7/16 male connectors
DL MS	DL MS	DL intermediate Connector Master-Slave	RF Low Power 50ohm coaxial (jumper) cable with N male connectors
UL MS	UL MS	UL intermediate Connector Master-Slave	50ohm coaxial (jumper) cable with N male connectors
IntraComm	IntraComm		If NO external alarms are connected: LAN/ CAT5 (If external alarms are connected, refer to section 2.4.4)

4. Route the following cables through the MASTER **DONOR** port and connect internally:

Cable	Condition	Details
Optic Fibre	Always	See section **Error! Reference source not found.**
ETH (opt)	If the unit is to be connected to the Ethernet infrastructure	To the Controller ETH port. See section 1.7.3

5. Connect the Server antenna to the SLAVE unit Server antenna port as illustrated.
6. Connect power, power-up, close and secure both units according to sections 2.2.8.1, 2.2.8.2 and 2.2.10.

2.4.4 Master/Slave Connections for External Alarms

To connect external alarms, modify the connections to the Master and Slave as follows:

Port location	Connection type and details
Master DONOR port	Route and connect ALARMS according to section 2.2.9
IntrComm (Master to Slave)	Interconnect RS-485 internal bus of MASTER and of SLAVE according to the following figure.

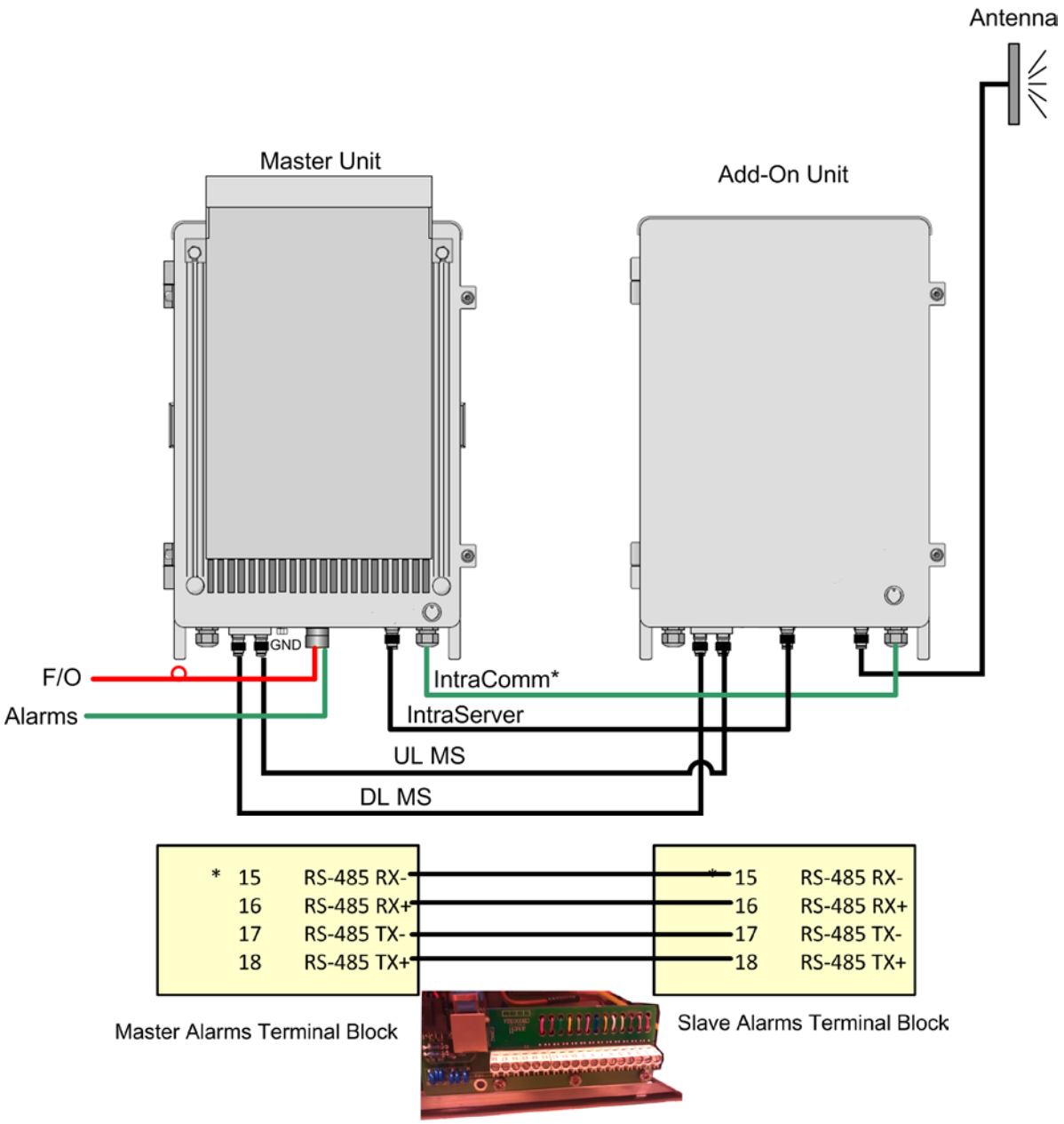

Figure 2-49: Connections WITH External Alarms

3 OPENING A SESSION AND NAVIGATING GUI

3.1 Opening a Direct Web Session

3.1.1 Connecting Locally

NOTE: This connection requires downloading the USB driver from the provided setup disk (or connection to the internet, where the driver is automatically loaded).

To open a local session:

1. Open the MBF-40 cover
   - Connect to the USB port on the Controller module. If the USB driver is not already installed on your laptop, the system will search for the driver on the provided setup disk or on the internet (if a network connection is available).
   - Run a browser and login according to the following section.

Figure 3-1: MBF-40 Controller Module Connection

2. Open the web browser and type *"axell-ne"* in the address bar.

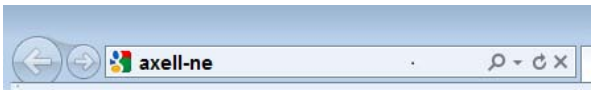

The login dialog appears.

Figure 3-2: Login Screen

3. Use the following username and password to login:
   - Username: **axell**
   - Password: **AxellPasswd**

Note: It is highly recommended to change the default password according to section 5.3.3.

The Web GUI Main Window appears. This is the same window is also viewed via the OMU II.

3.1.2 Remote Connection and Login

This type of Web session requires connecting the Repeater to the network.

3.2 Open a Session to the MBF-40 via the OMU II

1. Open a local or remote session to the host OMU II:
   - Remote session – open a Browser session in the same subnet as the host OMU II and enter the IP of the host OMU II (see OMU user manual for detailed procedure). Enter the OMU II User Name (e.g. **axell**) and Password (provided by your system administrator).
   - Local session– connect to the OMU II Control Module's USB or Ethernet ports. Enter the OMU II User Name (e.g. **axell**) and Password (provided by your system administrator).
   - After accessing an OMU II session, commission the MBF-40 according to the following section.

Figure 3-3: Connection to OMU II

3.3 Navigating the Web Interface

The Web GUI window provides access to the management options of the MBF-40. Several tabs (and sub-tabs) are available: Home, Nodes, Logs, etc., while the Home tab (illustrated below), is displayed on login.

NOTE: for 5-Band MBF-40 home screen, see Figure 3-6.

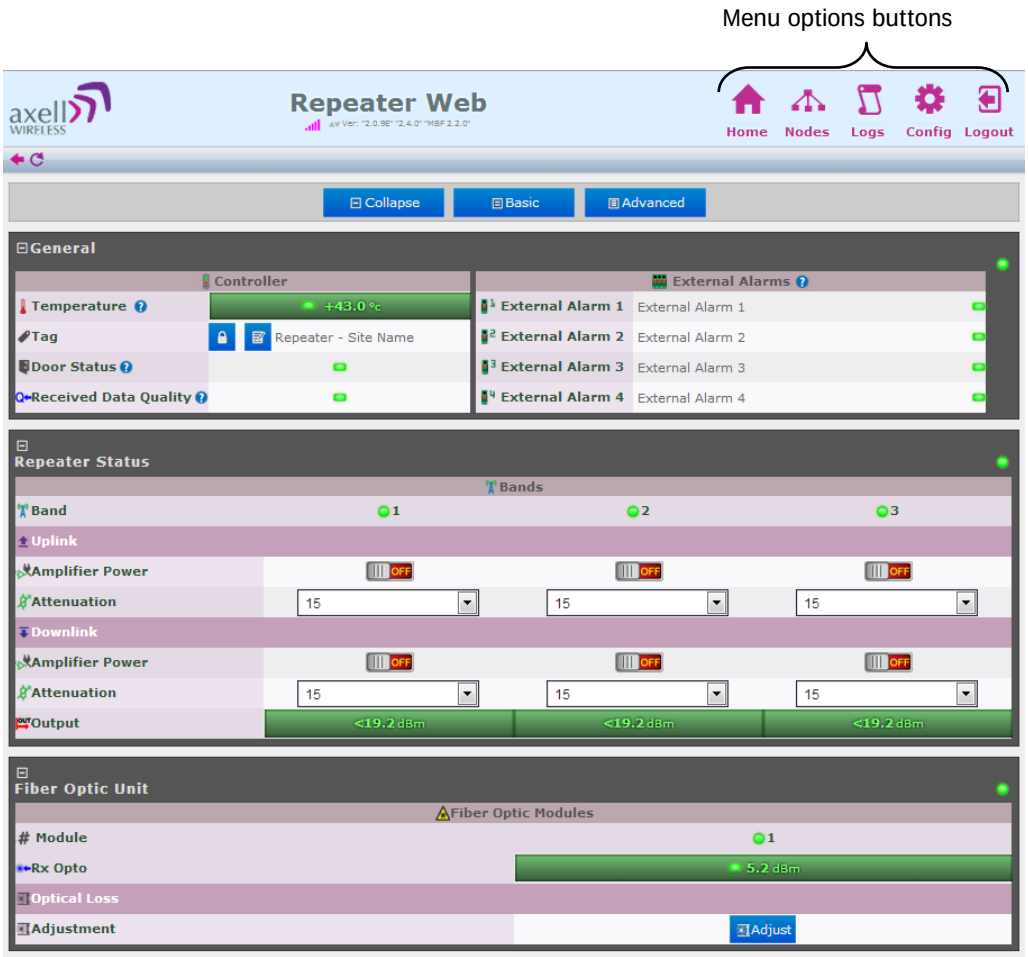

Figure 3-4: MBF-40 Home Screen

3.3.1 Management Options Buttons

The following table briefly describes the main functions of each tab:

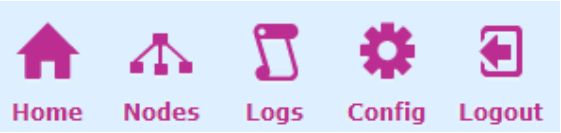

Tab	Description
	Provides a general status and alarm information. Switching to *Advanced View* will toggle a more detailed view of each band and module. Section 3.3.2.
	Lists the remote nodes – corresponding OMU and units connected the specific OMU.
	List of recent operations. Section 6.2.
	Provides a range of MBF-40 configuration procedures such as communication, RF, Date and Time, Password, etc. Section 5.1.
	Logout of the system.

3.3.2 Home Screen Overview

The screen is divided into four basic areas:

- Controller – shows general information on the MBF-40 device such as identification and temperature level.
- External Alarms – shows status of external alarms and the defined names.
- Repeater Status – RF connection status is divided into two sections:
  - Band – shows general band status and band name (e.g. 800MHz GSM).
  - Uplink/Downlink – gain, attenuation and connection status in the specific direction.
- Fibre Optic Unit – shows status on connection to remote OMU and allows for optical link adjustment.
- Sub-systems – overall status of all sub-systems such as power supplies, battery, communication etc.

Figure 3-5 Repeater Home Screen

3.3.3 Configuration Screen Overview

The configuration screen provides access to the MBF-40 configuration options.

To access the configuration screen

Click on the **Config** menu option in the Main window. The following screen appears.

Option	Description
Site Information	Configure and display MBF-40 identification information. See section 5.1.1
External Alarms	Used to activate and assign names to external alarms. See section 5.1.3
Change password	Used to update system login password for the logged-in user. See section 5.3.3
Date and Time	Used to configure the time stamp for dating MBF-40 events. See section 5.1.2.
Ethernet	Used to define the IP Address for remote access via Ethernet. See section 5.1.4
Remote Communication	Used to configure remote communication parameters and AEM integration. See section 5.2
CLI Shell	Command line used to communicate with the remote units. List of commands is found under Help. See section 5.5
Attribute Reference	CLI commands and attributes directory. See section 5.6
Reboot controller	Soft restarts the MBF-40 device. See section 5.4.
SNMP Agent	SNMP Agent configuration. See section 5.2.2

3.3.4 Five Service System GUI

The five service system GUI has no significant differences with other GUIs. It is displayed as one 5-band unit with same configurations and options.

The Home screen displays all the 5 bands in a time (same as in a tri-band/ quad-band), as shown in Figure 3-6: 5-Band MBF-40 Home Screen.

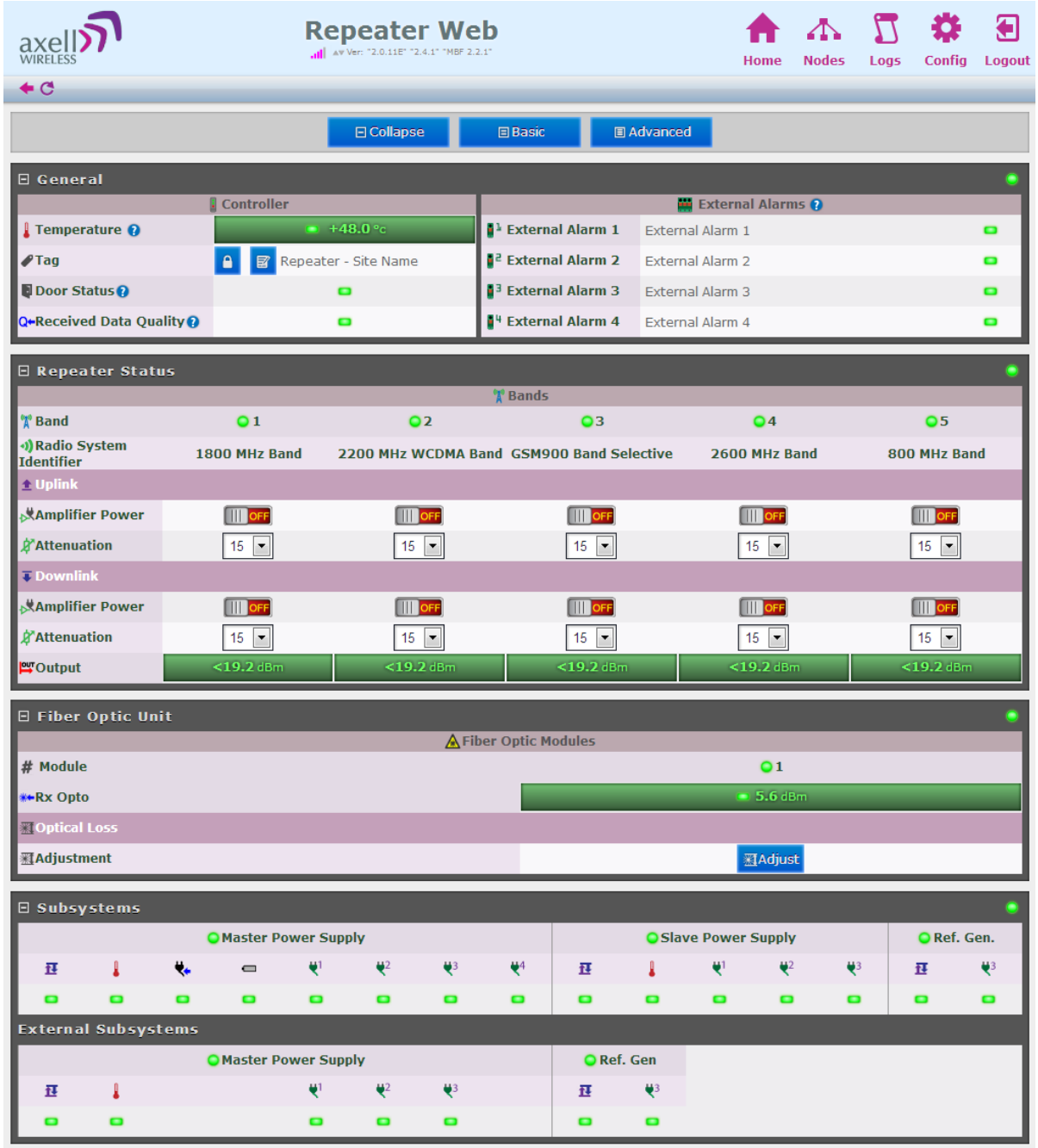

Figure 3-6: 5-Band MBF-40 Home Screen

Figure 3-7: 5-Band MBF-40 Site Information

4 MBF-40 COMMISSIONING

After the repeater is connected, it is identified by the OMU II via the Fibre connection and the unit is commissioned from the OMU II. The commissioning process consists of a few simple steps.

MBF-40 Setup and Commissioning consists of the following

1. Opening an **OMU II session** – for accessing the MBF-40 configuration window (via OMU II)
2. Performing **Optical Loss Adjustment** on the connected MBF-40
3. Setting the required **RF attenuation and gain levels** on the remote MBF-40
4. Assigning the unit a **recognizable name** (according to its location)

4.1 MBF-40 Optical Loss Adjustment (OLA)

MBF-40 OLA is performed from the OMU II.

For MBF-40 remotes, the maximum compensation is increased to 26dB to support shorter Fibre optic distances.

To perform MBF-40 OLA (via OMU II)

1. From the OMU II main window, click the **Opto Adjust** button.

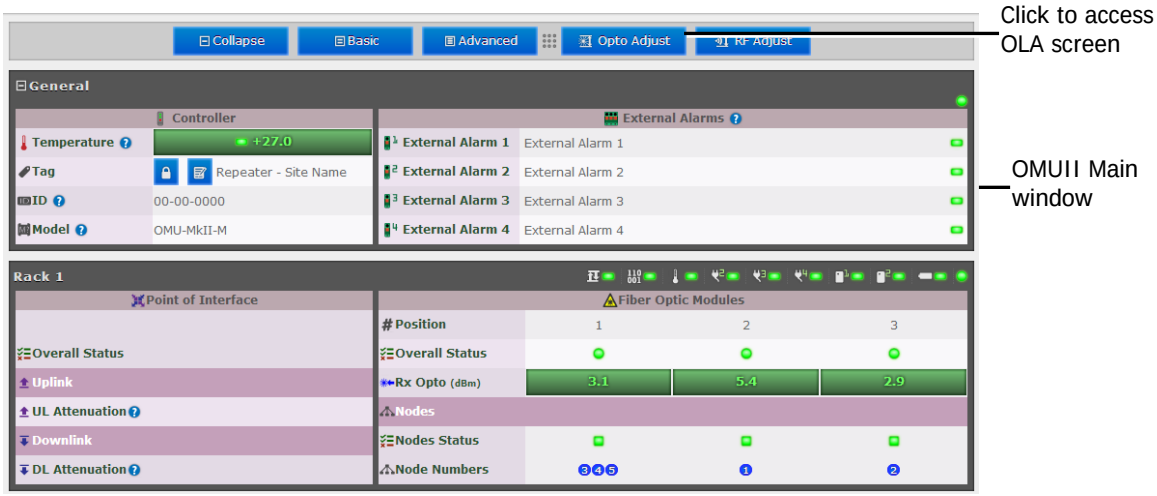

Figure 4-1: OMU II Main window

The OLA screen appears. The screen lists the OLA options (and status) for each link. (The links are listed according to the OMU II slot to which the remote is connected.).

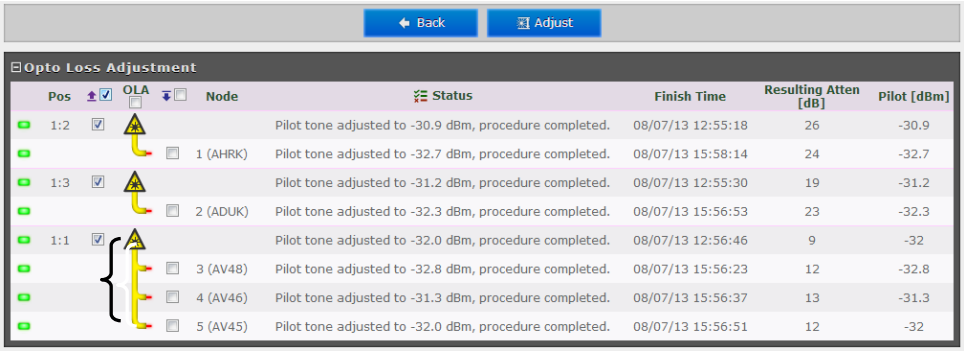

Figure 4-2. Configure and Initiate Optical Loss Adjustment

Column	Description
Pos	Each Rack corresponds to an OMU unit whereas each Slot corresponds to an Opto-Module. Slots are numbered according to their position in the OMU Chassis (numbered left to right).
Select All	Batch selection options: - mark all remotes for UL opto-adjustment. - mark all remotes for DL opto-adjustment. OLA - mark all remotes for DL and UL adjustment.
Node	Node list number and identification (e.g. AHFK)
Status	Displays an Error if process failed. If successful the pilot tone used and the adjustment level will be displayed.
Resulting Attenuation	Compensation level used for the opto-module (in dB).

4. Mark the check-boxes corresponding to the remotes (each connected to the designated Opto-module/Opto-Splitter) to which to perform the adjustment.
5. OLA (DL/UL) may be performed on each node individually (or a batch) or on **all** nodes at once by marking the checkbox next to the desired corresponding Opto-module and clicking **Adjust**.

   To easily mark all checkboxes mark the checkbox named **OLA**.

NOTE: The process may take several minutes depending on the size of the system and remote distance.

4.2 RF Balancing

The MBF-40 RF Balancing procedure can be performed manually (the automatic option specified in section 4.2.2 will be available in the future) via the OMU II web interface.

4.2.1 Manual RF Balancing

NOTE: If connected locally, enter the MBF-40 Home screen and skip to step 2.

The manual balancing procedure consists of the following steps:

- Verifying the DL RF output level is maximized by setting the required DL attenuation of the signal.
- Setting the UL attenuation according to the DL.
- In case of noise, adjusting the UL attenuation to reduce noise

To balance the MBF-40 UL and DL outputs

1. Access the MBF-40 Configuration window:
   - Click on the **Nodes** button. The below pane appears
   - Click **Control** next to the node to be balanced.

2. The resulting pane can be displayed in two views:
   - Basic – default view (**Basic** button)
   - Advanced – provides more information **(Advanced** button)

   The dialog below shows an example of the Basic (default) view.

Figure 4-3: Example of MBF-40 Tri-Band Configuration window

3. In the Downlink:
   - Verify the **Amplifier** for each band is ON.
   - Set **Attenuation** to maximum value (15dB).
   - *Lower* the **Attenuation** level step by step until the desired Output power level is reached (Zero attenuation = maximum gain).
   - Verify the Amplifier Saturation is GREEN.

4. In the Uplink:
   - Verify the **Amplifier** for each band is ON.
   - Set **Attenuation** equal to the value set in the DL (above).
   - Verify the Amplifier Saturation is GREEN.

NOTE: If noise is detected on the link, reduce only the Uplink for optimal signal.

4.2.2 Automatic MBF-40 RF Balancing

NOTE: This feature will be available in future release.

To access the Automatic RF Adjustment pane

1. Access the OMU II **Home** window and click on **RF Adjustment**.

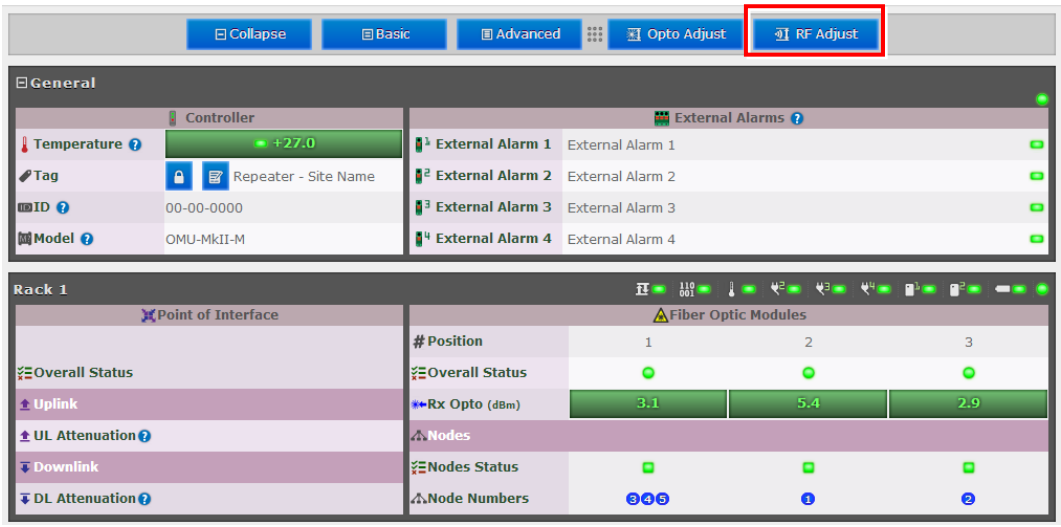

Figure 4-4: OMU II Main window

2. The following pane appears.

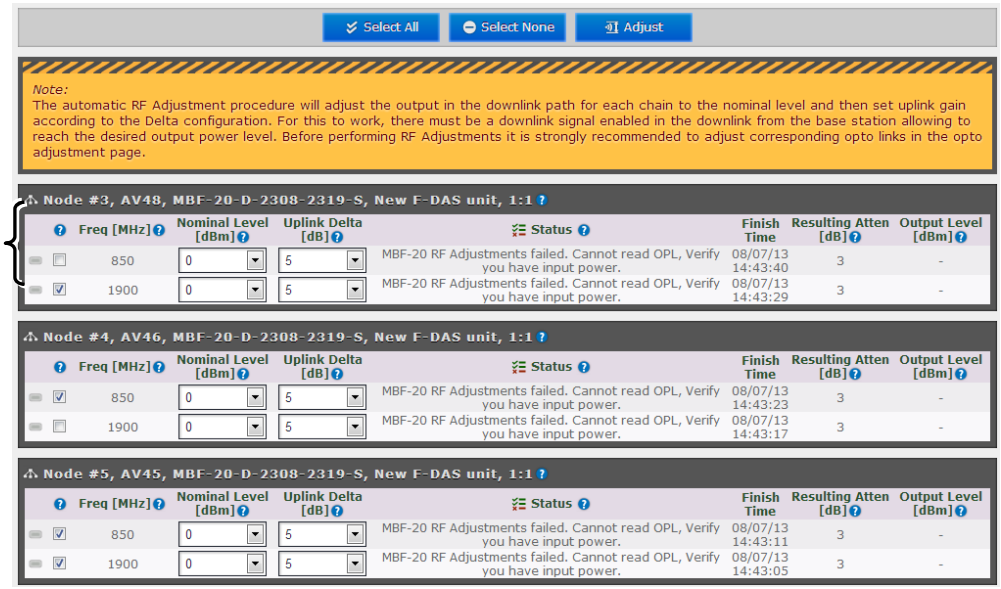

3. Select the bands of each remote to be adjusted (e.g. 1900MHz band on Node #3)
4. Adjust the following for each band:
   - Nominal Level (dBm)
   - Uplink Delta (dB)
5. Click **Adjust**. The procedure may take several minutes depending on the number of units selected.

4.3 Integration into the AEM

NOTE: Integration into the AEM is only performed from the AEM side – no action is required from the MBF-40 side.

The AEM automatically connects to the repeater, downloads all the repeater parameters and statuses into a database. When all parameters have been downloaded, the AEM configures the repeater with the IP address where alarms and reports should be sent to, and optionally with a secondary IP address where the repeater can connect to in case connection to primary IP fails.

When heartbeat reports and alarms are sent from the repeater to the AEM also the latest information about the status and RF-configuration is included. This means that the AEM operator always has information about the current status in the AEM database (and does not need to call the repeater to find this out).

NOTE: Once the repeater is integrated to the AEM, all changes to the repeater should preferably be done from the AEM in order to ensure that the database always contains correct information.

4.4 What Next?

The MBF-40 unit is now ready for operation. You may monitor the unit's general status via the OMU II Main window and if the node is faulty (red LED), access the dedicated configuration screen in Basic or Advanced view for more information.

NOTE: Consult the OMU II User Manual for additional information on RF and Optical adjustments.

5 MBF-40 FULL GUI DESCRIPTION

This chapter provides a detailed description of the complete MBF-40 specific Web GUI accessible when opening a *direct* session to the MBF-40.

When an *indirect session* (via OMU II) is opened to the MBF-40, only the MBF-40 Main window is available. Additional options are available when a *direct* session is opened to the MBF-40 (*not* via OMU II).

This chapter describes how to open local and remote indirect sessions to the Remote and the available options when such a session is opened.

5.1 Configuring General Parameters

5.1.1 Site Information – MBF-40 Identification

It is recommended to assign each MBF-40 a recognizable name that will identify the location, site name, etc. The Site Information button provides access to MBF-40 hardware and software version information.

To set MBF-40 TAG

1. In the **Home** window, click the edit button next to Tag.

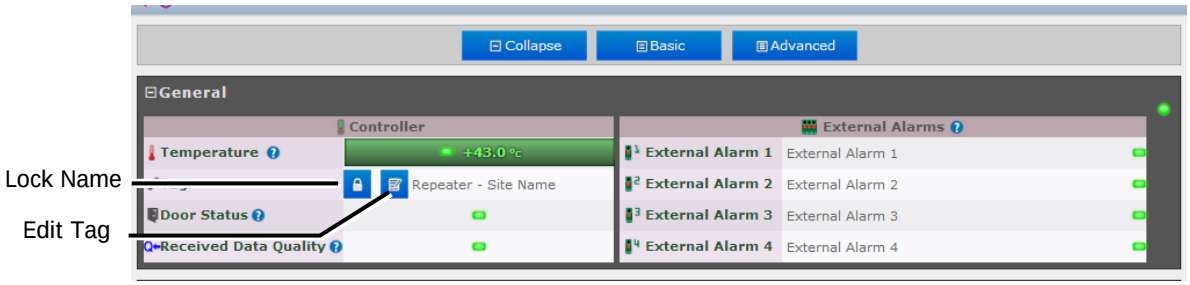

Figure 5-1. Set MBF-40 TAG Name

2. Enter the Name (up to 30 characters), click OK and click **Apply.**

To view MBF-40 Site Information

Click the **Config** button and click on the **Site Information** icon. Two areas are displayed:

- Control Module – provides hardware and software version information.
- Site Information – provides MBF-40 identification information.

NOTE: for 5-band MBF-40 Site Information, see Figure 3-7.

Figure 5-2. MBF-40 Site Information

5.1.2 Date & Time

NOTE: The date and time are automatically set from the OMU II.

Be sure to set the correct date and time in order to accurately timestamp all events occurring on the MBF-40.

To set the Date & Time:

1. Click the **Config** button.
2. Click on **Date & Time**.
3. Do one of the following:
   - Either, enter the correct date and time according to the displayed formats.
   - Or, click on **Local Time** to set the time according to the PC running the Web-GUI.
4. Click **Apply**.

Set to local time

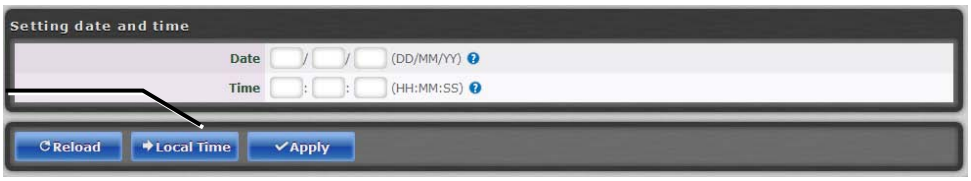

Figure 5-3. Configure Date and Time

5.1.3 Configure External Alarms

It is required to configure any connected external alarms according to the trigger (high or low) and it is recommended to assign the alarms recognizable names (such as Door Open, High Temperature, etc.)

To configure the external alarms

1. In the Main menu, click the **Config** button.
2. Click on the **External Alarms** icon.
3. For each alarm:

- Set the Trigger as High or Low as required. . Alarm polarity can be configured:
  - Active-low - when there is no voltage the alarm indicator will turn red
  - Active-high - an applied voltage of between 12 and 24 V will cause the external alarm indicator to turn red.
  -
  - Assign the alarm a recognizable description

4. Click **Apply**.

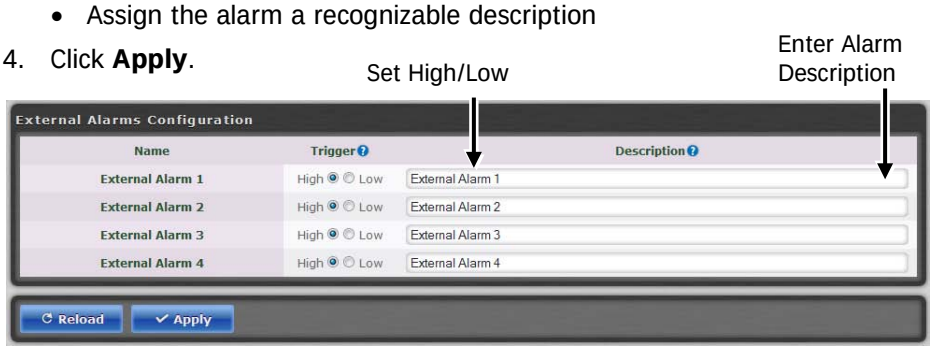

Figure 5-4: Configure External Alarms

5.1.4 IP Address

This procedure describes how to set up the IP address either manually or configure for acquisition via DHCP (usually configured for local management options).

To configure the IP address

1. In the Main menu, click the **Config** button.
2. Click on **Ethernet**.
3. For manual IP address configuration:
   - Select Manually Configure IP Address.
   - Set the IP, Subnet Mask, Default Gateway and DNS addresses.
   - Click **Apply.**
4. For DHCP IP address configuration:
   - Select Automatically Obtain IP Address (DHCP).
   - No other settings are required.
   - Click **Apply.**

The Manual configuration settings are illustrated below.

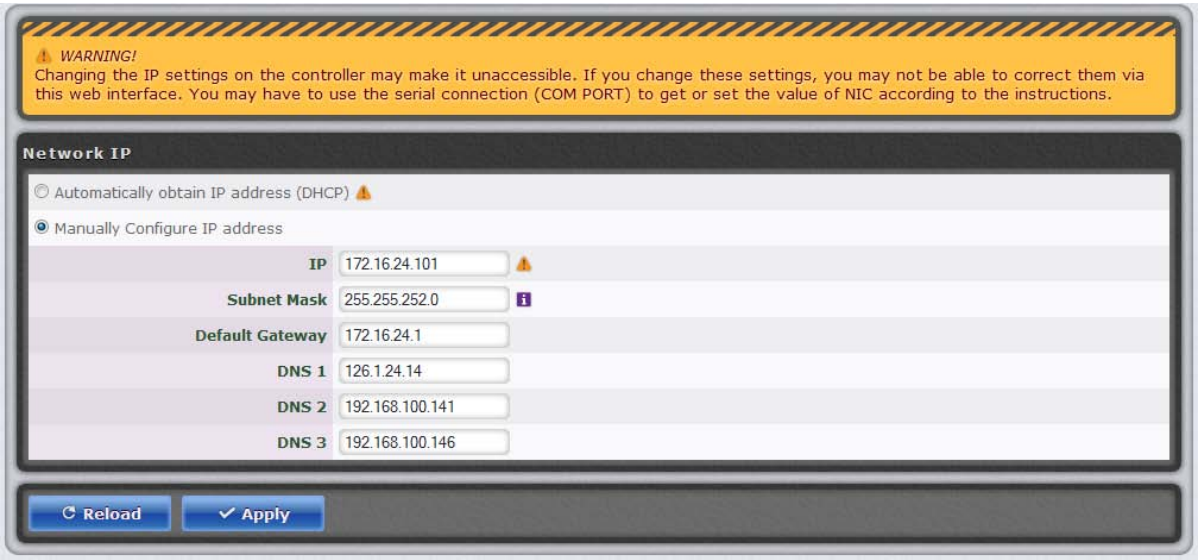

Figure 5-5: Configure Local Network Parameters

5.2 Remote Communication and Fault Notification Setup

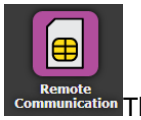

This section describes the Ethernet and SNMP setup. The SNMP setup option also available in this dialog is described in section 5.2.2. SNMP .

Select an option (ETH:TCP or ETH:SNMP) and configure. Then select the next relevant option.

NOTE: The configuration of each option is saved and active. It is not relevant which option is currently selected (ETH:TCP or ETH:SNMP).

5.2.1 TCP/IP and Ethernet

1. Click on the **Config** button.
2. From **Device:Method** select **ETH:TCP** (Ethernet:TCP/IP).
3. Click **Apply**.

Figure 5-6: Remote ETH Configuration

5.2.2 SNMP Support

The MBF-40 includes SNMP support, including an SNMP Agent and SNMP traps (alarms). All SNMP queries and traps are supported either via the OMU II or a direct connection to the unit.

5.2.2.1 SNMP Traps Parameters

The MBF-40 sends SNMP traps to user defined destination addresses.

NOTE: One destination address can currently be defined via the Web. Seven more destination addresses can be defined via the CLI Shell.

To configure the SNMP traps destination address

1. Click on the **Configure** button (top right corner).
2. Select **Remote Communication**.
3. In the **Device:Method** field, select **ETH:SNMP**

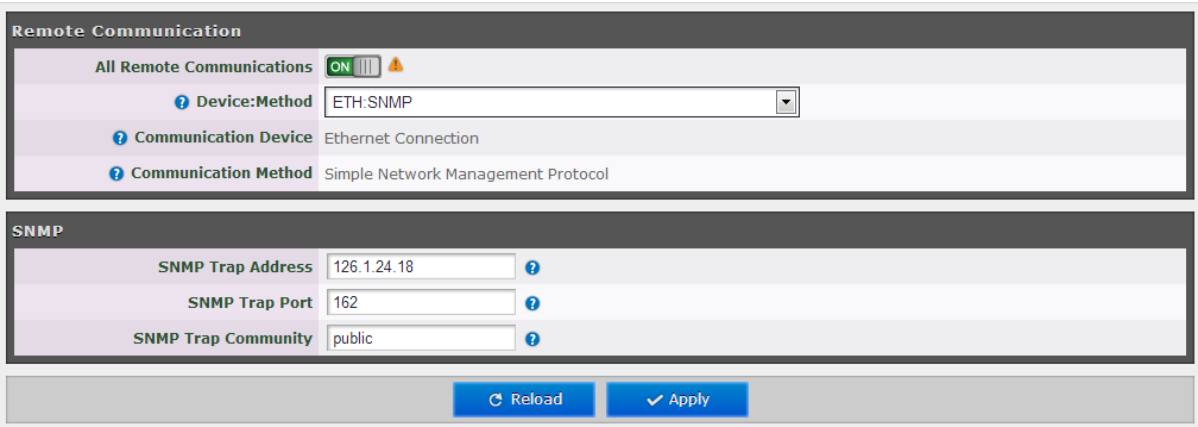

4. Define the SNMP trap destination IP address (additional addresses can be defined via the CLI Shell.).
5. Enter the (destination address device) Trap Port and its Community parameters.
6. Click **Apply**.

5.2.2.2 SNMP Agent - Activating and Configuring

The SNMP agent provides inventory management for hosted repeaters (on which the SNMP agent is enabled) and a table of active alarms in the controller or Fibre system for remote querying.

The SNMP Agent is responsible for responding to queries and carries out requests. The SNMP Agent also provides the proprietary MIB (AXELL-AM-MIB), accessible via any SNMP manager (e.g. HP OpenView).

All SNMP queries to the remote are implemented via an OMU session.

To allow SNMP agent queries

- To allow SNMP queries of the OMU II – the SNMP agent must be enabled on the OMU II.
- To allow SNMP queries of the remote devices via OMU II – the SNMP agent must be enabled on the OMU II *and* on the remote devices.
- Remote units configured with an IP address and connected to the communication infrastructure, can be queried directly.

To activate the MBF-40 SNMP Agent

1. Click on the **Config** button (top right corner) and select **SNMP Agent Config.** The following pane appears:

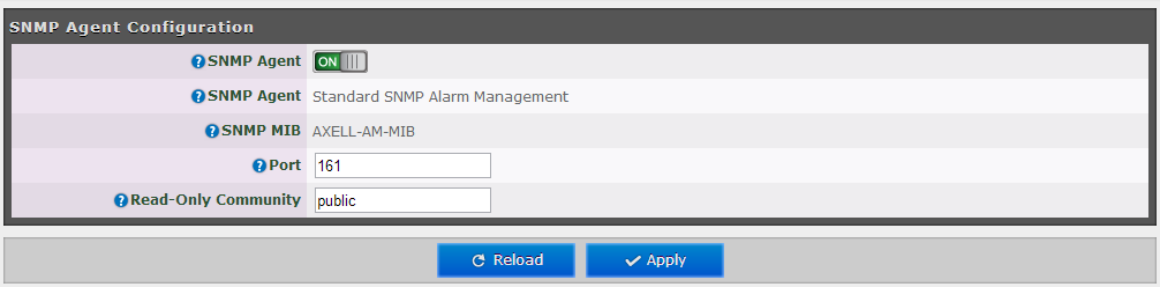

2. Set the **SNMP Agent** toggle to **ON**.
3. Set the **port** and the **Read-Only community**.
4. Click **Apply**.

5.3 User Accounts

The MBF-40 comes pre-configured with default usernames and passwords in the various administration levels.

At the moment, updating user accounts is available only via Command Line Interface (CLI) Shell. See the Common Commands and Attributes v2.4.0 document for detailed commands and syntax or click on the **Help** button at the top right of the Web-GUI screen.

5.3.1 Default User Accounts

User Name	Default Password	Details
Axell	AxellPasswd	Default user name.
omcuname	iwnkhoob	AEM user account. This account will not generate VLI, LGO or CLR alarms.
sysadmin	AxellAdmin4050	This is the system administration password which is used for firmware upgrades and user administration. Escalation to this level is achieved by issuing command SYSADMIN from the user prompt.
useradmin	UseradminPwd23	This account contains user administration privileges. Escalation to this level is achieved by issuing command USERADMIN from the user prompt.

NOTE: It is strongly recommended to change the default user names and passwords immediately at commissioning. This is done by using the command **ACT PASSWORD**. Please refer to the User Administration section in Common Commands and Attributes document for detailed syntax.

5.3.2 User Access Levels

In this generation of the system, standard users can be promoted to login via the Web Interface, inheriting the Read-Write or Read-Only access to this interface.

There are five different access levels:

Access Level	Default User Levels
Read-Only	axell, omcuname, useradmin, sysadmin
Read-Write	axell, omcuname, useradmin, sysadmin
Web	axell
User Administrator	omcuname, useradmin, sysadmin
System Administrator	omcuname, sysadmin

Note: New users added to the system have read-only access.

Users may be promoted to read-write and/or web access using the **ACT USERPROMOTE** command. See **Common Commands and Attributes** document for details on promoting users.

Note: Users omcuname, sysadmin and useradmin cannot be promoted to Web Access due to security reasons.

5.3.3 Change Password

To prevent unauthorized access, it is highly recommended to change the default password of the user.

NOTE: Note that you can only change the password for the User Name with which the session was accessed.

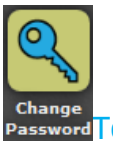

To change the Password

1. In the Main menu, click the **Config** button.
2. Click the **Change Password** button.
3. For the current User Name (e.g. **axell**):
   - Enter the New password.
   - Repeat the entry.
4. Click **Apply**.

NOTE: The password is not encrypted during transmission. Use this screen only if the connection to the repeater is safe. Use the CLI commands using an encrypted connection, if possible (i.e. SSH).

5.4 Reboot

CAUTION!! Use this function in Emergency Cases ONLY

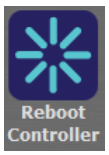

To reboot the Control Module:

1. Click the **Config** tab.
2. Click on the **Reboot** icon.
3. Approve the Reboot sequence.

5.5 CLI (Command Line Interface) Shell

To access the CLI Shell:

1. Click on the **Config** button.
2. Select the **Shell** option.

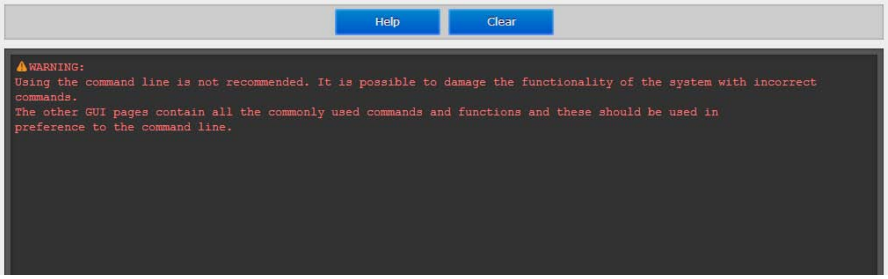

The **Shell** button invokes the CLI pane. It is used to run some of the commands that are currently not provided by the Web GUI (user privileges and administration) and/or for advanced troubleshooting and configurations procedures.

All configuration and management procedures can be implemented using this interface. Please refer to the *Attribute Reference* section (by clicking the **Cofing** button on the top right and selecting **Attribute Reference –** see 5.6) for detailed syntax and available commands. You may also consider viewing the *MBF-40 Commands and Attributes* document.

5.6 Attribute Reference

To access the Attribute Reference

1. Click on the **Config** button.
2. Select the **Attribute Reference** option.

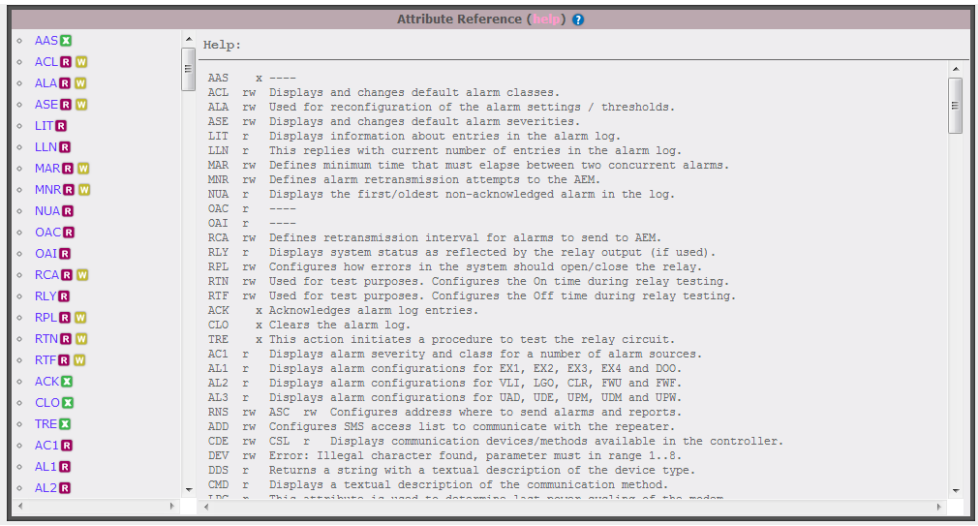

The Attribute Reference lists all available CLI commands and includes details and examples on how to use the commands. Additional information may be found in the *MBF-40 Commands and Attributes* document.

6 MONITORING AND FAULT SOURCING

MBF-40 provides the following monitoring and fault sourcing options:

- Web GUI Home screen Advanced mode – shows general status of system and components
- Web GUI Logs screen – provides logs of faults and operations
- Module LEDs – can be seen locally when opening the Repeater

This chapter describes these fault sourcing tools.

Note the following

- The Input / Output RF level power level monitoring windows are for indication only and should not be considered a replacement for laboratory test equipment accuracy of measurement of actual signal levels. The error of measurement will be high at low input levels.
- The normal operating range of signal measurement is as follows:
  - Downlink Output range +20dBm to +43dBm
  - Uplink Output range -10dBm to +5dBm

6.1 Monitoring Via the MBF-40 Home Screen

In addition to RF settings and readings, the MBF-40 Home screen provides detailed information on the operation status of internal modules. This information can be used to aid in remotely troubleshooting the Remote.

To access the MBF-40 Main Monitoring and Configuration window

1. Access the OMU II main windows, click the **Nodes** button, choose the remote related node and click the adjacent **Control** button. The MBF-40 Home window appears in Basic View. To view more details, click **Advanced.**

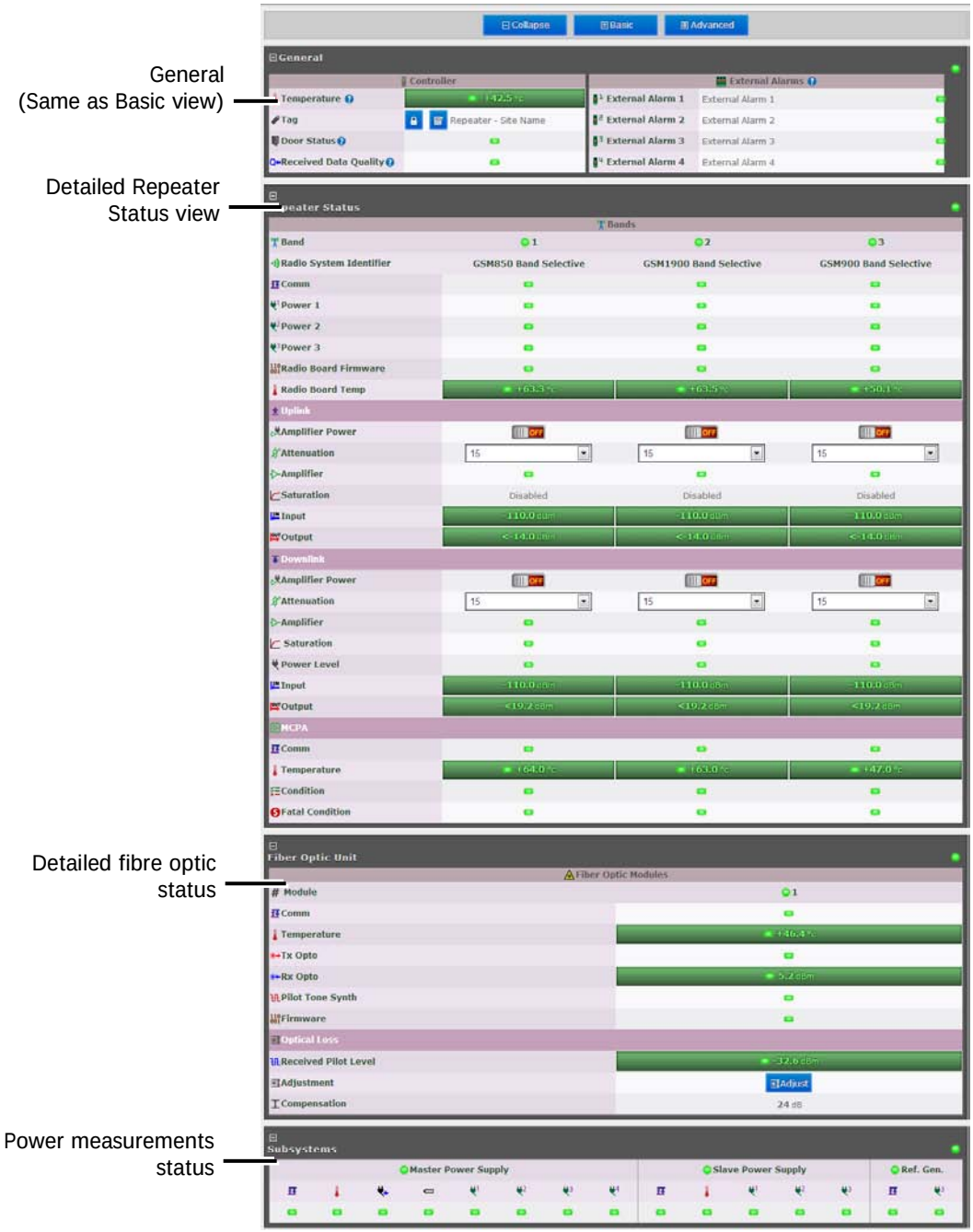

Figure 6-1: MBF-40 Main Screen Advanced

6.1.1 General Page Area

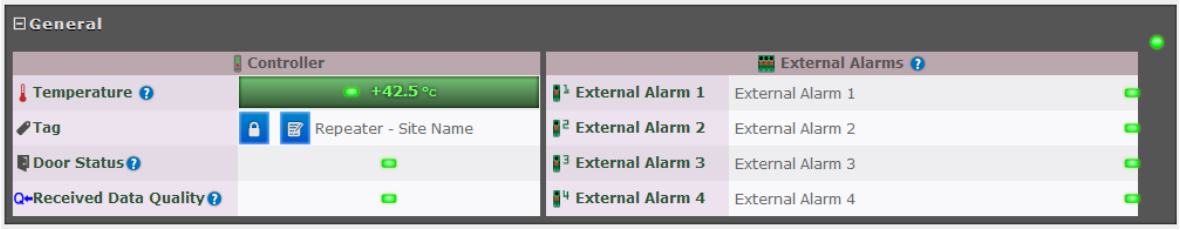

Figure 6-2: MBF-40 General

Indicator	Description
Temperature	Current ambient temperature
Tag	Name of Repeater, user customizable
Door Status	Green if closed
Received Data Quality	Check data for consistencies

6.1.2 Detailed view of the MBF-40

Figure 6-3: MBF-40 Repeater Status

Indicator	Description
Band	Overall band status.
Radio System Identifier	Band(s) and technologies in use
Comm	DL/UL status
Power	Power indication
Radio Board Firmware	Firmware related error
Radio Board Temp	Radio board temperature indicator
Amplifier Power	Turn amp. on/off.
Attenuation	Use to define DL/UL RF attenuation level per band
Amplifier	Amplifier status
Saturation	Saturation level status
Power Level	Power supply status
Input/Output	Input/output power levels
Comm	Communication status
Temperature	Temperature level and status indicator
Condition	Signal conditioning status
Fatal Condition	Critical condition indicator (RED = fault)

6.1.3 Detailed view of Fibre Optic Unit

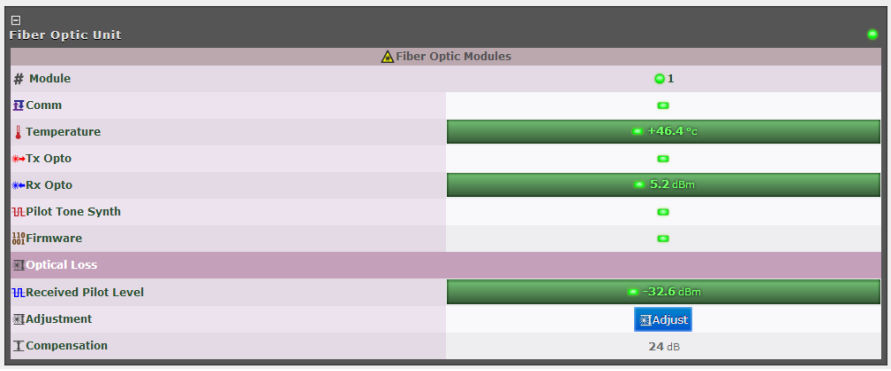

Figure 6-4: MBF-40 F/O Status

Indicator	Description
#Module	Overall optic module status
Comm	Optic connection status
Temperature	Temperature level and status indicator
Tx Opto	DL optic signal status
Rx Opto	UL optic signal strength and status
Pilot Tone Synth	Pilot tone synthesizer status
Firmware	Firmware related error
Received Pilot Level	Pilot tone level received in optic module
Adjustment	Perform UL OLA (on repeater side)
Compensation	Compensation performed on the optic link

6.1.4 Subsystems

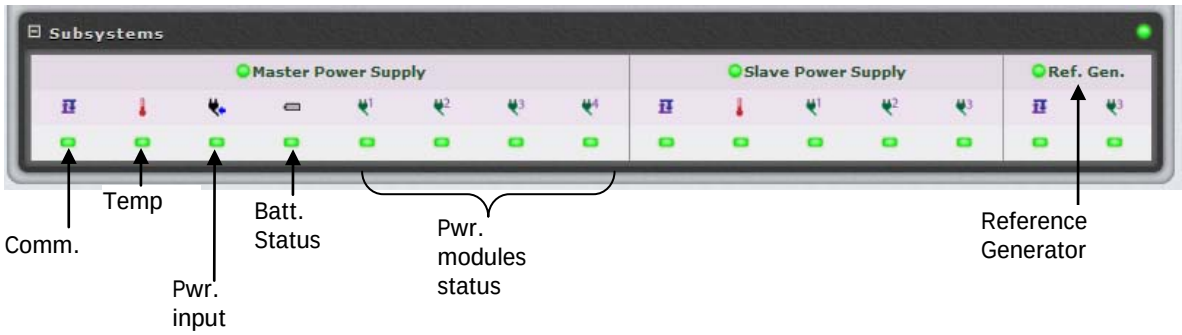

6.2 Logs Screen

The Alarms Log displays the last 100 alarms and/or user actions on the remote system in a chronological order. By hovering with the mouse over each alarm, full alarm details are available, including alarm descriptions, severities, alarm classes and time of event.

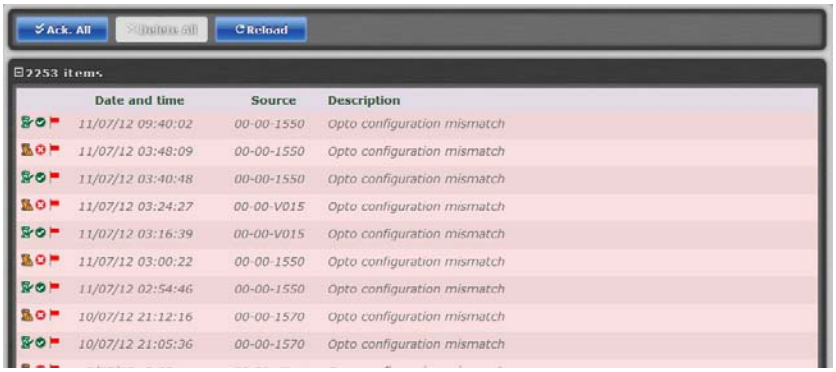

Figure 6-5: Logs

To receive a summary containing all information on a reported incident in the Log list, simply hover with the mouse over the specified Log and view all details contained in the Log (see below).

Figure 6-6: Logs – Summary

Column	Description
Date & Time	Time of occurrence
Source	ID of reporting source
Description	Additional alarm information (e.g. Open Door)

Icon	Description
	Alarm attended to and cleared.
	System alarm – displayed when system functionality may be compromised.
	Alarm status: OK
	Alarm status: Error
	Acknowledge alarm – Green = Acknowledged. Click to change acknowledgement. Use the **Ack All** button to acknowledge all alarm logs.

6.3 Module LEDs

This section describes the LEDs of the internal modules. The modules are accessed if the remote is opened. An example of the MBF-40 Dual-band, dual-service antenna model is given below:

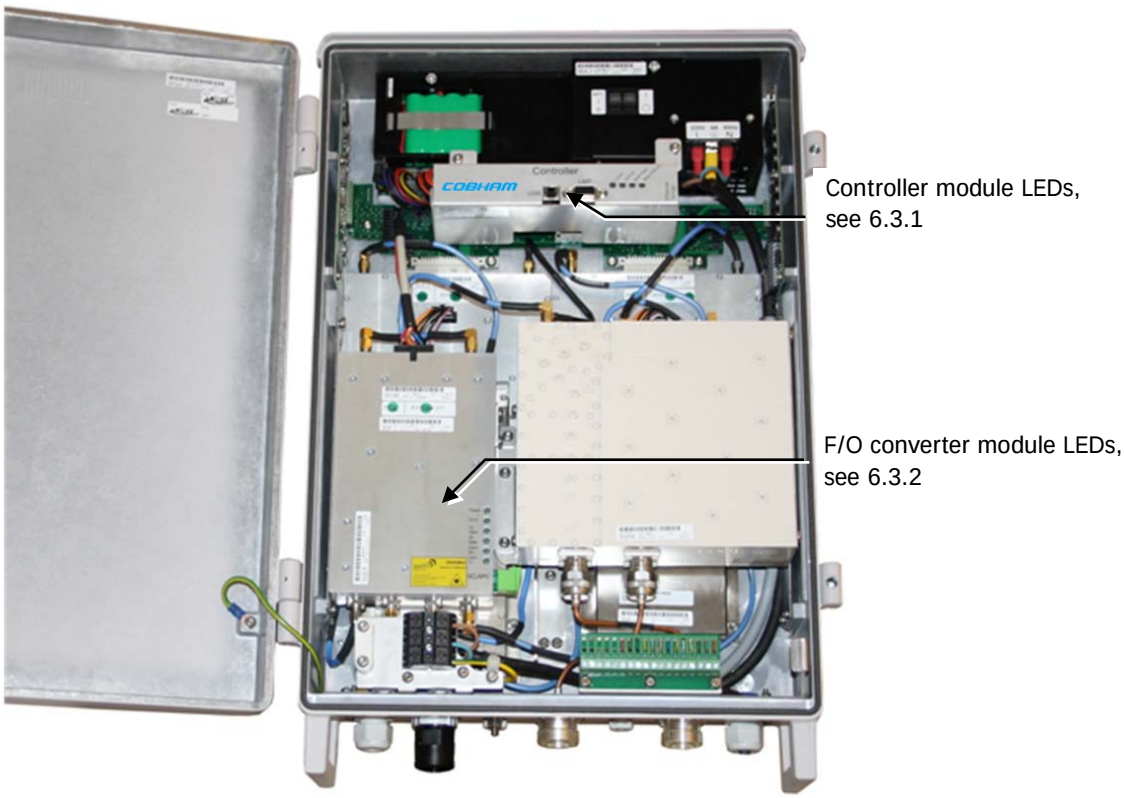

Figure 6-7: Example of MBF-40 Repeater Internal View

NOTE: MIMO models include two optic converter modules with separate LED indicators. Both modules' LED status should be checked.

6.3.1 Control Module LEDs

The Control Module has four LEDs which give information regarding the status of the MBF-40.

The two LEDs "Modem Power" and "Modem Status" do not fill any function and can be disregarded.

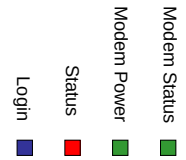

Blue LED - Login		
	Quick flash	Control Module switched on, someone logged in locally and/or remotely
	Off (except for a quick flash every 10th sec)	Control Module switched on, no one logged in
	Off (permanent)	Control Module switched OFF
Red LED - Status		
	Quick flash	Control Module switched on, one or more errors/alarms detected
	Off (except for a quick flash every 10th sec)	Control Module switched on, status OK
	Off (permanent)	Control Module switched off

6.3.2 F/O Converter LEDs

NOTE: MIMO models include **two** optic converters with separate status LEDs.

There are 6 LEDs on the module to indicate the status.

LED 1, Power, Green	
On	Unit is powered on
Off	Unit has no power
LED 2, Error, Red	
On	Error detected
Off	No error
LED 3, UL Data, Yellow	
On	Communication is ongoing in the uplink direction
Off	No communication
LED 4, DL Data, Yellow	
On	Communication is ongoing in the downlink direction
Off	No communication
LED 5, Opto Rx, Green	
On	Received RF signal on Fibre channel is above threshold
Off	Input level below threshold
LED 6, Opto Tx, Green	
On	Transmitted RF signal on Fibre channel is above threshold
Off	Output level below threshold

6.3.3 Power Supply LEDs

This section provides a detailed description of the LEDs and fault examples.

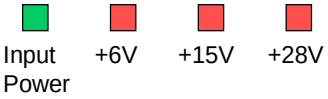

LED 1, Input Power, Green	
Slow flash	Power supply unit operating on AC or DC
OFF	Power supply unit not operating
LED 2, +6V, Red	
Slow flash (every 10 seconds)	+6V power supply operating
Quick flash	+6V power supply not operating or operating with malfunction
LED 3, +15V, Red	
Slow flash (every 10 seconds)	+15V power supply operating
Quick flash	+15V power supply not operating or operating with malfunction
LED 4, +28V, Red	
Slow flash (every 10 seconds)	+28V power supply operating
Quick flash	+28V power supply not operating or operating with malfunction

Examples	
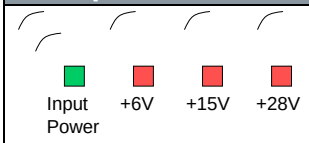	LED 1 is flashing slowly, LED 2 – 4 are flashing slowly (once every 10 seconds) => power supply unit is operating without problem
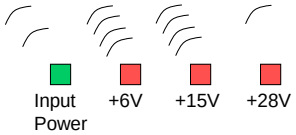	LED 1 is flashing slowly, one or two of the red LEDs are flashing quickly => Input power is operating but there is a problem with some of the other voltages
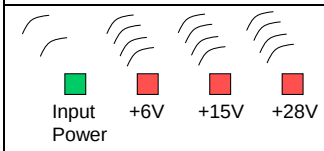	LED 1 is flashing slowly, all of the red LEDs are flashing quickly => Input power is out and unit is operating on backup battery

Appendix A - US Specifications

Frequency Range		Uplink (UL)	Downlink (DL)	Operational BW	Composite Output Power (*)
LTE700	Lower band	698-716MHz	728-746MHz	29MHz	+37 dBm
	Upper band	776-787MHz	746-757MHz	29MHz	+37 dBm
800MHz (Sprint)		817-824 MHz	862-869 MHz	32MHz	+37 dBm
850MHz (Cellular)		824-849MHz	869-894MHz	32MHz	+37 dBm
1900MHz (PCS)		1850-1915MHz	1930-1995MHz	65MHz	+37 /+43 dBm**
1700MHz (AWS)		1710-1755MHz	2110-2155MHz	45MHz	+39 / +43 dBm**
General Parameters					
Noise Figure		3dB Typical (maximum gain)			
Ripple		±2dB			
Propagation Delay		< 2µs			
Gain UL/DL		Adjustable, in 1dB steps			
System Impedance		50Ω			
Return loss at antenna connections		>14dB			
Antenna Connectors		DIN 7/16			
No. of antenna orts		1 for single/dual/tri/quad band, 2 connectors for MIMO			
Electrical ratings		115VAC 60Hz, -48VDC			
Optical Parameters					
Wavelength DL/UL		1310/1550nm			
Max optical Loss		10dBo			
F/O Connector		1 SC/APC for SISO, 2 for MIMO			
Modulation Accuracy at nominal output power					
GSM/GMSK		<2.5° RMS and <10° peak			
EDGE/8-PSK		<3% EVM RMS			
WCDMA/EVM		<12.5% RMS (composite according to ETSI TS 25.106 with TM1/64 DPCH			
LTE/EVM		< 8% (composite according to 3GPP TS 136 106)			
PkCDE		<-33dB (ETSI TS 25.106 with TM 1/64 DPCH and spreading factor 256)			
Power Consumption		**Single Band**	**Dual Band**	**Tri Band**	**Quad Band**
		140W	220W / 350W ***	350W	400W
Mechanical		**Single Band**	**Dual Band**	**Tri Band**	**Quad Band**
Dimensions		21.3" x 15" x 7.8" 540 x 382 x 198mm	21.3" x 15" x 7.8" 540 x 382 x 198 mm	21.3" x 15" x 12.3" 540 x 382 x 313 mm	21.3" x 15" x 12.3" 540 x 382 x 313 mm
Weight		44lbs (20kg)	48.5lbs (22kg)	76lbs (34kg)	82lbs (37kg)
Enclosure		Aluminum (IP65)			
Environmental					
EMC		FCC			
Operating Temperature		-77 to +121ºF (-25 to +50ºC)			
Storage Temperature		-86 to +158ºF (-30 to +70ºC)			
Humidity		ETSI EN 300 019-2-4 (see compliance below)			
Complies With					
Radio		FCC parts 22, 24 and 27 where applicable.			
Safety		UL 60 950-1, 1st Edition "Information Technology Equipment – Safety - Part 1: General requirements" UL 50, 11th Edition "Enclosures for Electrical Equipment"			

* In repeaters that share a common downlink Fiber for 900MHz and 1800MHz a minimum of 4 carriers in each band is required for the full composite output power to be attainable maintaining full ETSI compliance.

** The composite output power is model dependent.

*** Power consumption of all dual-band models except for MBF-4317-4319, is 220W. Power consumption for MBF-4317-4319 is 350 W.

Appendix B - Canada Specifications

Frequency Range		Uplink (UL)	Downlink (DL)	Operational BW	Power (Mean)
LTE700	Lower band	698-716MHz	728-746MHz	29MHz	+37dBm
	Upper band	776-787MHz	746-757MHz	29MHz	+37dBm
800MHz (Sprint)		817-824 MHz	862-869 MHz	32MHz	+37dBm
850MHz (Cellular)		824-849MHz	869-894MHz	25MHz	+37dBm
1900MHz		1850-1915MHz	1930-1995MHz	65MHz	+37dBm
1700MHz (AWS)		1710-1755MHz	2110-2155MHz	45MHz	+39dBm
General Parameters					
Noise Figure		3dB Typical (maximum gain)			
Ripple		±2dB			
Propagation Delay		< 2µs			
Nominal UPLINK Gain and Nominal BW		**UL Nominal Gain (adjustable in 1dB steps)**		**Nominal 20dB Bandwidth**	
LTE700	Lower band	45 dB		28 MHz	
	Upper band	45 dB		21 MHz	
800MHz (Sprint) + 850MHz (Cellular)		48 dB		41.5 MHz	
1900MHz		49 dB		82 MHz	
1700MHz (AWS)		49 dB		71.5 MHz	
Nominal DOWNLINK and Nominal BW		**DL Nominal Gain (adjustable in 1dB steps)**		**Nominal 20dB Bandwidth**	
LTE700	Lower band	46 dB		38.5 MHz	
	Upper band	46 dB		38.5 MHz	
800MHz (Sprint) + 850MHz (Cellular)		46 dB		42 MHz	
1900MHz		49 dB		79MHz	
1700MHz (AWS)		49 dB		69 MHz	
System Impedance		50Ω			
Return loss at antenna connections		>14dB			
Antenna Connectors		DIN 7/16			
No. of antenna ports		1 for single/dual/tri/quad band, 2 connectors for MIMO			
Electrical ratings		115VAC 60Hz, -48VDC			
Cooling		Convection in single, dual and tri-band. Quad-band requires fan hood			
Optical Parameters					
Wavelength DL/UL		1310/1550nm			
Max optical Loss		10dBo			
F/O Connector		1 SC/APC for SISO, 2 for MIMO			
Modulation Accuracy at nominal output power					
GSM/GMSK		<2.5° RMS and <10° peak			
EDGE/8-PSK		<3% EVM RMS			
WCDMA/EVM		<12.5% RMS (composite according to ETSI TS 25.106 with TM1/64 DPCH			
LTE/EVM		< 8% (composite according to 3GPP TS 136 106)			
PkCDE		<-33dB (ETSI TS 25.106 with TM 1/64 DPCH and spreading factor 256)			
Power Consumption		**Single Band**	**Dual Band**	**Tri Band**	**Quad Band**
		140W	220W	350W	400W
Mechanical		**Single Band**	**Dual Band**	**Tri Band**	**Quad Band**
Dimensions		21.3" x 15" x 7.8" 540x382x198mm	21.3" x 15" x 7.8" 540x382x198mm	21.3" x 15" x 12.3" 540x382x313mm	21.3" x 15" x 12.3" 640x382x313mm
Weight		44lbs (20kg)	48.5lbs (22kg)	76lbs (34kg)	83lbs (38kg)
Enclosure		Aluminum (IP65)			
Environmental					
EMC					
Operating Temperature		-77 to +121°F (-25 to +50°C)			
Storage Temperature		-86 to +158°F (-30 to +70°C)			
Humidity		ETSI EN 300 019-2-4 (see compliance below)			

Appendix C – F/O Cleaning Procedure

NOTE: The process is demonstrated on an OMU F/O module and is similar to all F/O equipment supplied by Cobham Wireless.

Tools

Tool Description	Illustration
Fibrescope connected to a PC running the appropriate viewing software. It is highly recommended that some form of Fibre viewing equipment such as a Fibrescope is used to ensure that all Fibre connections are clean before termination; failure to do so could result in poor system performance	
Lint-free swabs (box), P/N 99-000127	
Lint-free wipes (pack) P/N 99-000125	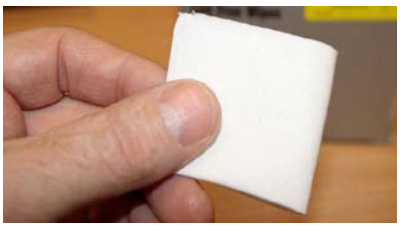
Fujikura "One Click" cleaner P/N 98-900004.	
99% isopropyl alcohol (can), P/N 99-000126	
Cletop type S Cassette Cleaner, P/N 98-900001	

Dry Cleaning

CAUTION!! Invisible laser radiation might be emitted from disconnected Fibres or connectors. Do not stare into beams or view directly with optical instruments.

1. Before cleaning the optical connectors on the OMU it is advisable to clean the connector of the mating cable being attached to the optical port.

   An unclean optical connector is often the cause for reduced system performance. A bit of dust or oil from a finger can easily interfere with, or block light. Fortunately, it is very easy to clean the connector. Be sure to use the correct procedure for the given connector. When disconnected, cap the SC/APC connector to keep it clean and prevent scratching the tip of the ferrule.

Use a product specially designed for the purpose, such as the Cletop type S Cassette Cleaner.

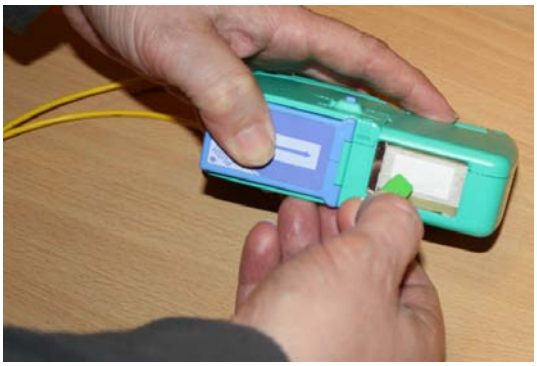

2. Begin by dry cleaning the F/O bulkhead connector (shown below is the Fujikura One-Click in use).

IMPORTANT!! Always make sure there is a way of inspecting the connector after cleaning. Cleaning can actually leave the end-face in a worse condition, since alcohol residue is one of the most difficult contaminants to remove.

3. Remove the protective cap from the cleaning-head end of the "One Click" cleaner, lift the protective end-cap on the Fibre connector and offer-up the end to the Fibre connector

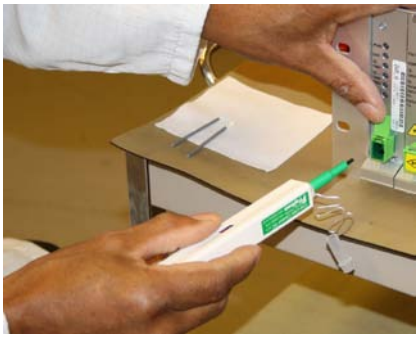

4. With the cleaning-head end fully engaged in the connector, push until an audible "click" is heard

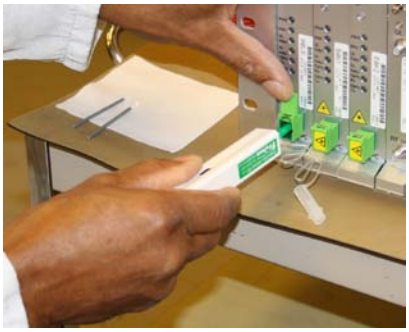

5. Without fully withdrawing the cleaning head end push it in again twice more, each time until an audible "click" is heard.

6. Withdraw the "One Click" cleaner and replace the protective end cap.

7. Inspect the Fibre connector using a Fibrescope. On the PC monitor, verify that there is no contamination present on the connector end-face.

8. If the connector is dirty, clean it with a wet cleaning technique followed immediately by dry cleaning. This is to remove any remaining residue from the wet clean (the following steps demonstrate a wet cleaning technique).

Wet Cleaning

ATTENTION!	Invisible laser radiation might be emitted from disconnected fibres or connectors. Do not stare into beams or view directly with optical instruments.

1. Lightly moisten a new lint-free wipe with 99% isopropyl alcohol. (Step A below).

   Tip: Have a dry lint-free swab available for immediately drying after performing the wet-cleaning.

2. Lightly press and turn a clean lint-free swab in the moistened area of the wipe to moisten the swab. It is important that the swab is not too wet. (Step B below).
3. Insert the moistened lint-free swab into the bulkhead adapter. Lightly press and rotate several times in the same direction. (Step C below).

Step A Step B Step /c

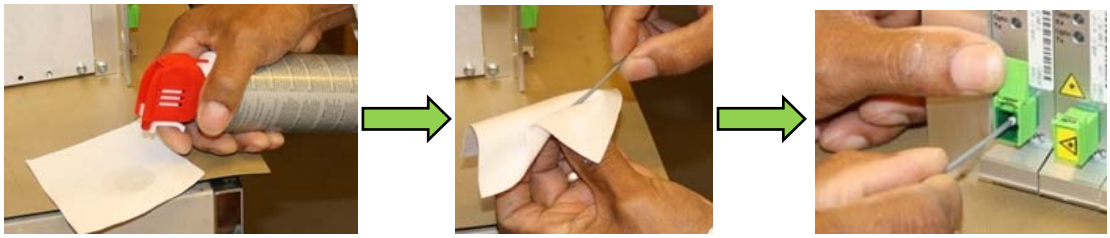

Figure 6-8: Wet-Cleaning Technique

4. Immediately use a dry lint-free swab to clear any remaining alcohol residue.

   NOTE: Do **not** re-use any of the wipes and/or swabs. Dispose of them properly.

5. Follow steps 3 to 6 of Dry Cleaning above
6. Re-inspect the Fibre using the Fibrescope. On the PC monitor, verify that there is no contamination present on the connector end-face.
7. If the Fibre is still dirty, go back to step 1 (Wet Cleaning) and repeat the entire process.

   NOTE: The entire wet/dry cleaning cycle should only be used twice, if the Fibre is still dirty after two cycles of wet/dry cleaning seek advice from the Cobham Wireless Support Desk.