SAR TEST REPORT (15.247)

REPORT NO.: SA971216L09
MODEL NO.: WLAN-1501
RECEIVED: Nov. 11, 2008
TESTED: Jan. 20 ~ Jan. 21, 2009
ISSUED: Feb. 11, 2009

APPLICANT: CAMEO COMMUNICATIONS, INC.

ADDRESS: No.42, Sec. 6, Mincyuan E. Rd., Neihu District, Taipei City 114, Taiwan

ISSUED BY: Bureau Veritas Consumer Products Services (H.K.) Ltd., Taoyuan Branch

LAB ADDRESS: No. 47, 14th Ling, Chia Pau Tsuen, Lin Kou Hsiang, Taipei Hsien 244, Taiwan, R.O.C.

TEST LOCATION: No. 19, Hwa Ya 2nd Rd, Wen Hwa Tsuen, Kwei Shan Hsiang, Taoyuan Hsien 333, Taiwan, R.O.C.

This test report consists of 51 pages in total except Appendix. It may be duplicated completely for legal use with the approval of the applicant. It should not be reproduced except in full, without the written approval of our laboratory. The client should not use it to claim product endorsement by TAF or any government agencies. The test results in the report only apply to the tested sample.

TABLE OF CONTENTS

1. CERTIFICATION 3
2. GENERAL INFORMATION 4
2.1 GENERAL DESCRIPTION OF EUT 4
2.2 GENERAL DESCRIPTION OF APPLIED STANDARDS 6
2.3 GENERAL INOFRMATION OF THE SAR SYSTEM 7
2.4 GENERAL DESCRIPTION OF THE SPATIAL PEAK SAR EVALUATION 11
3. DESCRIPTION OF SUPPORT UNITS 15
4. DESCRIPTION OF TEST MODES AND CONFIGURATIONS 16
4.1. DESCRIPTION OF ANTENNA LOCATION 16
4.2. DESCRIPTION OF ASSESSMENT POSITION 17
4.3. DESCRIPTION OF TEST MODE 18
4.4. SUMMARY OF TEST RESULTS 21
4.5. CHECK FOR SCAN RESOLUTION 24
4.6. ENHANCED ENERGY COUPLING AT INCREASED SEPARATION DISTANCES 25
5. TEST RESULTS 26
5.1 TEST PROCEDURES 26
5.2 MEASURED SAR RESULTS 28
5.3 SAR LIMITS 31
5.4 RECIPES FOR TISSUE SIMULATING LIQUIDS 32
5.5 TEST EQUIPMENT FOR TISSUE PROPERTY 36
6. SYSTEM VALIDATION 37
6.1 TEST EQUIPMENT 37
6.2 TEST PROCEDURE 38
6.3 VALIDATION RESULTS 40
6.4 SYSTEM VALIDATION UNCERTAINTIES (FOR 2.4GHz) 41
6.5 SYSTEM VALIDATION UNCERTAINTIES (FOR 5.0GHz) 42
7. MEASUREMENT SAR PROCEDURE UNCERTAINTIES 43
7.1. PROBE CALIBRATION UNCERTAINTY 43
7.2. ISOTROPY UNCERTAINTY 44
7.3. BOUNDARY EFFECT UNCERTAINTY 44
7.4. PROBE LINEARITY UNCERTAINTY 45
7.5. READOUT ELECTRONICS UNCERTAINTY 45
7.6. RESPONSE TIME UNCERTAINTY 45
7.7. INTEGRATION TIME UNCERTAINTY 46
7.8. PROBE POSITIONER MECHANICAL TOLERANCE 47
7.9. PROBE POSITIONING 47
7.10. PHANTOM UNCERTAINTY 48
7.11. DASY4 UNCERTAINTY BUDGET (FOR 2.4GHz) 49
7.12. DASY4 UNCERTAINTY BUDGET (FOR 5 ~ 6GHz) 50
8. INFORMATION ON THE TESTING LABORATORIES 51

APPENDIX A: TEST CONFIGURATIONS AND TEST DATA
APPENDIX B: ADT SAR MEASUREMENT SYSTEM
APPENDIX C: PHOTOGRAPHS OF SYSTEM VALIDATION
APPENDIX D: SYSTEM CERTIFICATE & CALIBRATION

1. CERTIFICATION

PRODUCT: 802.11a/b/g/n Dual band WLAN USB Dongle
MODEL: WLAN-1501
BRAND: CAMEO
APPLICANT: CAMEO COMMUNICATIONS, INC
TESTED: Jan. 20 ~ Jan. 21, 2009
TEST SAMPLE: ENGINEERING SAMPLE
STANDARDS: **FCC Part 2 (Section 2.1093)**
FCC OET Bulletin 65, Supplement C (01-01)
RSS-102

The above equipment (model: WLAN-1501) has been tested by **Bureau Veritas Consumer Products Services (H.K.) Ltd., Taoyuan Branch**, and found compliance with the requirement of the above standards. The test record, data evaluation & Equipment Under Test (EUT) configurations represented herein are true and accurate accounts of the measurements of the sample's EMC characteristics under the conditions specified in this report.

PREPARED BY : Polly Chien **, DATE :** Feb. 11, 2009
Polly Chien / Specialist

TECHNICAL ACCEPTANCE : James Fan **, DATE :** Feb. 11, 2009
Responsible for RF James Fan / Engineer

APPROVED BY : Gary Chang **, DATE :** Feb. 11, 2009
Gary Chang / Assistant Manager

2. GENERAL INFORMATION

2.1 GENERAL DESCRIPTION OF EUT

PRODUCT	802.11a/b/g/n Dual band WLAN USB Dongle
MODEL NO.	WLAN-1501
FCC ID	NHPWLAN1501
POWER SUPPLY	5.0Vdc from host equipment
MODULATION TYPE	CCK, DQPSK, DBPSK for DSSS 64QAM, 16QAM, QPSK, BPSK for OFDM
MODULATION TECHNOLOGY	DSSS, OFDM
TRANSFER RATE	802.11b:11.0/ 5.5/ 2.0/ 1.0Mbps 802.11g: 54.0/ 48.0/ 36.0/ 24.0/ 18.0/ 12.0/ 9.0/ 6.0Mbps 802.11a: 54.0/ 48.0/ 36.0/ 24.0/ 18.0/ 12.0/ 9.0/ 6.0Mbps Draft 802.11n: up to 300.0Mbps
FREQUENCY RANGE	**2.4GHz:** 2400MHz ~ 2483.5MHz **5.0GHz:** 5150 ~ 5250MHz & 5725 ~ 5850MHz
NUMBER OF CHANNEL	**2.4GHz:** 11 for 802.11b, 802.11g, draft 802.11n (20MHz) 7 for draft 802.11n (40MHz) **5.0GHz:** 5150 ~ 5250MHz: 4 for 802.11a, draft 802.11n (20MHz) 2 for draft 802.11n (40MHz) 5725 ~ 5850MHz: 5 for 802.11a, draft 802.11n (20MHz) 2 for draft 802.11n (40MHz)
CHANNEL FREQUENCIES UNDER TEST AND ITS CONDUCTED OUTPUT POWER (FOR 2.4GHz)	**802.11b:** 180.315mW / Ch6: 2437MHz **802.11g:** 387.681mW / Ch6: 2437MHz **DRAFT 802.11n (20MHz):** 387.900mW / Ch6: 2437MHz **DRAFT 802.11n (40MHz):** 385.899mW / Ch4: 2437MHz

CHANNEL FREQUENCIES UNDER TEST AND ITS CONDUCTED OUTPUT POWER (FOR 5.0GHz)	**802.11a:** 202.083mW / Ch165: 5825MHz **DRAFT 802.11n (20MHz):** 226.220mW / Ch165: 5825MHz **DRAFT 802.11n (40MHz):** 256.766mW / Ch159: 5795MHz
AVERAGE SAR (1g)	0.424W/kg for 2.4GHz 0.669W/kg for 5.0GHz
ANTENNA TYPE	2.4GHz: Printed antenna with -0.07dBi gain 5.0GHz: Printed antenna with 3.07dBi gain
DATA CABLE	NA
I/O PORTS	USB
ACCESSORY DEVICES	NA

NOTE:

1. The EUT is a 802.11a/b/g/n Dual band WLAN USB Dongle. The functions of EUT listed as below:

	REFERENCE REPORT
WLAN 802.11b/g, draft 802.11n	SA971216L09
WLAN 802.11a, draft 802.11n (5725~5825 MHz)	
WLAN 802.11a, draft 802.11n (5150~ 5250MHz)	SA971216L09-1

2. The frequency bands used in this EUT are listed as follows:

Frequency Band (MHz)	**2400~2483.5**	**5150~5250**	**5725~5825**
802.11b	√		
802.11g	√		
802.11a		√	√
Draft 802.11n (20MHz)	√	√	√
Draft 802.11n (40MHz)	√	√	√

3. The EUT incorporates a MIMO function. Physically, the EUT provides two completed transmitters and two receivers.

MODULATION MODE	**TX FUNCTION**
802.11b	2TX
802.11g	2TX
802.11a	2TX
Draft 802.11n (20MHz)	2TX
Draft 802.11n (40MHz)	2TX

4. The above EUT information was declared by manufacturer and for more detailed features description please refers to the manufacturer's specifications or User's Manual.

2.2 GENERAL DESCRIPTION OF APPLIED STANDARDS

According to the specifications of the manufacturer, this product must comply with the requirements of the following standards:

FCC Part 2 (2.1093)

FCC OET Bulletin 65, Supplement C (01- 01)

RSS-102

IEEE 1528-2003

All test items have been performed and recorded as per the above standards.

2.3 GENERAL INOFRMATION OF THE SAR SYSTEM

DASY4 **(software 4.7 Build 53)** consists of high precision robot, probe alignment sensor, phantom, robot controller, controlled measurement server and near-field probe. The robot includes six axes that can move to the precision position of the DASY4 software defined. The DASY4 software can define the area that is detected by the probe. The robot is connected to controlled box. Controlled measurement server is connected to the controlled robot box. The DAE includes amplifier, signal multiplexing, AD converter, offset measurement and surface detection. It is connected to the Electro-optical coupler (ECO). The ECO performs the conversion form the optical into digital electric signal of the DAE and transfers data to the PC.

For 2.4GHz:

EX3DV3 ISOTROPIC E-FIELD PROBE

CONSTRUCTION	Symmetrical design with triangular core Built-in shielding against static charges PEEK enclosure material (resistant to organic solvents, e.g., DGBE)
FREQUENCY	10 MHz to > 6 GHz Linearity: ± 0.2 dB (30 MHz to 6 GHz)
DIRECTIVITY	± 0.3 dB in HSL (rotation around probe axis) ± 0.5 dB in tissue material (rotation normal to probe axis)
DYNAMIC RANGE	10 μW/g to > 100 mW/g Linearity: ± 0.2 dB (noise: typically < 1 μW/g)
DIMENSIONS	Overall length: 330 mm (Tip: 20 mm) Tip diameter: 2.5 mm (Body: 12 mm) Typical distance from probe tip to dipole centers: 1 mm
APPLICATION	High precision dosimetric measurements in any exposure scenario (e.g., very strong gradient fields). Only probe which enables compliance testing for frequencies up to 6 GHz with precision of better 30%.

NOTE

1. The Probe parameters have been calibrated by the SPEAG. Please reference “APPENDIX D” for the Calibration Certification Report.
2. For frequencies above 800MHz, calibration in a rectangular wave-guide is used, because wave-guide size is manageable.
3. For frequencies below 800MHz, temperature transfer calibration is used because the wave-guide size becomes relatively large.

For 5GHz:

EX3DV3 ISOTROPIC E-FIELD PROBE (FREQUENCY BAND 5 ~ 6GHz)

DIMENSIONS	Overall length: 330 mm (Tip Length: 20 mm) Tip diameter: 2.5 mm (Body diameter: 12 mm) Distance from probe tip to dipole centers: 1.0 mm
APPLICATION	General dosimetric measurements range 5 ~ 6 GHz. Fast automatic scanning in arbitrary phantoms (EX3DV3)

NOTE: The Probe parameters have been calibrated by the SPEAG. Please reference “APPENDIX D” for the Calibration Certification Report.

TWIN SAM V4.0

CONSTRUCTION	The shell corresponds to the specifications of the Specific Anthropomorphic Mannequin (SAM) phantom defined in IEEE 1528-2003, EN 62209-1 and IEC 62209. It enables the dosimetric evaluation of left and right hand phone usage as well as body mounted usage at the flat phantom region. A cover prevents evaporation of the liquid. Reference markings on the phantom allow the complete setup of all predefined phantom positions and measurement grids by manually teaching three points with the robot.
SHELL THICKNESS	2 ± 0.2mm
FILLING VOLUME	Approx. 25liters
DIMENSIONS	Height: 810mm; Length: 1000mm; Width: 500mm

SYSTEM VALIDATION KITS:

CONSTRUCTION	Symmetrical dipole with l/4 balun enables measurement of feedpoint impedance with NWA matched for use near flat phantoms filled with brain simulating solutions. Includes distance holder and tripod adaptor
CALIBRATION	Calibrated SAR value for specified position and input power at the flat phantom in brain simulating solutions
FREQUENCY	2450MHz, 5800MHz
RETURN LOSS	> 20dB at specified validation position
POWER CAPABILITY	> 100W (f < 1GHz); > 40W (f > 1GHz)
OPTIONS	Dipoles for other frequencies or solutions and other calibration conditions upon request

DEVICE HOLDER FOR SAM TWIN PHANTOM

CONSTRUCTION	The device holder for the mobile phone device is designed to cope with different positions given in the standard. It has two scales for the device rotation (with respect to the body axis) and the device inclination (with respect to the line between the ear reference points). The rotation centers for both scales is the ear reference point (ERP). Thus the device needs no repositioning when changing the angles. The holder has been made out of low-loss POM material having the following dielectric parameters: relative permittivity ε =3 and loss tangent δ =0.02. The amount of dielectric material has been reduced in the closest vicinity of the device, since measurements have suggested that the influence of the clamp on the test results could thus be lowered. The device holder for the portable device makes up of the polyethylene foam. The dielectric parameters of material close to the dielectric parameters of the air.

DATA ACQUISITION ELECTRONICS

CONSTRUCTION

The data acquisition electronics (DAE3) consists of a highly sensitive electrometer grade preamplifier with auto-zeroing, a channel and gain-switching multiplex, a fast 16 bit AD converter and a command decoder and control logic unit. Transmission to the measurement server is accomplished through an optical downlink for data and status information as well as an optical uplink for commands and the clock. The mechanical probe is mounting device includes two different sensor systems for frontal and sideways probe contacts. They are used for mechanical surface detection and probe collision detection. The input impedance of the DAE3 box is 200MOhm; the inputs are symmetrical and floating. Common mode rejection is above 80 dB.

2.4 GENERAL DESCRIPTION OF THE SPATIAL PEAK SAR EVALUATION

The DASY4 post-processing software (SEMCAD) automatically executes the following procedures to calculate the field units from the micro-volt readings at the probe connector. The parameters used in the evaluation are stored in the configuration modules of the software:

Probe parameters:	- Sensitivity	$Norm_i$, a_{i0}, a_{i1}, a_{i2}
	- Conversion factor	$ConvF_i$
	- Diode compression point	dcp_i
Device parameters:	- Frequency	F
	- Crest factor	Cf
Media parameters:	- Conductivity	σ
	- Density	ρ

The first step of the evaluation is a linearization of the filtered input signal to account for the compression characteristics of the detector diode. The compensation depends on the input signal, the diode type and the DC-transmission factor from the diode to the evaluation electronics. If the exciting field is pulsed, the crest factor of the signal must be known to correctly compensate for peak power. The formula for each channel can be given as:

$$V_i = U_i + U_i^2 \bullet \frac{cf}{dcp_i}$$

V_i	=compensated signal of channel i	(i = x, y, z)
U_i	=input signal of channel I	(i = x, y, z)
Cf	=crest factor of exciting field	(DASY parameter)
dcp_i	=diode compression point	(DASY parameter)

From the compensated input signals the primary field data for each channel can be evaluated:

$$\text{E-fieldprobes: } E_i = \sqrt{\frac{V_1}{Norm_i \cdot ConvF}}$$

$$\text{H-fieldprobes: } H_i = \sqrt{V_i} \cdot \frac{a_{i0} + a_{i1} f + a_{i2} f^2}{f}$$

V_i	=compensated signal of channel I	(i = x, y, z)
$Norm_i$	=sensor sensitivity of channel i µV/(V/m)2 for E-field Probes	(i = x, y, z)
ConvF	= sensitivity enhancement in solution	
a_{ij}	= sensor sensitivity factors for H-field probes	
F	= carrier frequency [GHz]	
E_i	= electric field strength of channel i in V/m	
H_i	= magnetic field strength of channel i in A/m	

The RSS value of the field components gives the total field strength (Hermitian magnitude):

$$E_{tot} = \sqrt{E_x^2 + E_y^2 + E_z^2}$$

The primary field data are used to calculate the derived field units.

$$SAR = E_{tot}^2 \cdot \frac{\sigma}{\rho \cdot 1'000}$$

SAR	= local specific absorption rate in mW/g
E_{tot}	= total field strength in V/m
σ	= conductivity in [mho/m] or [Siemens/m]
ρ	= equivalent tissue density in g/cm3

Note that the density is set to 1, to account for actual head tissue density rather than the density of the tissue simulating liquid. The entire evaluation of the spatial peak values is performed within the Post-processing engine (SEMCAD). The system always gives the maximum values for the 1g and 10g cubes. The algorithm to find the cube with highest averaged SAR is divided into the following stages:

1. The extraction of the measured data (grid and values) from the Zoom Scan
2. The calculation of the SAR value at every measurement point based on all stored data (A/D values and measurement parameters)
3. The generation of a high-resolution mesh within the measured volume
4. The interpolation of all measured values from the measurement grid to the high-resolution grid
5. The extrapolation of the entire 3-D field distribution to the phantom surface over the distance from sensor to surface
6. The calculation of the averaged SAR within masses of 1g and 10g.

The probe is calibrated at the center of the dipole sensors that is located 1 to 2.7mm away from the probe tip. During measurements, the probe stops shortly above the phantom surface, depending on the probe and the surface detecting system. Both distances are included as parameters in the probe configuration file. The software always knows exactly how far away the measured point is from the surface. As the probe cannot directly measure at the surface, the values between the deepest measured point and the surface must be extrapolated. The angle between the probe axis and the surface normal line is less than 30 degree.

The maximum search is automatically performed after each area scan measurement. It is based on splines in two or three dimensions. The procedure can find the maximum for most SAR distributions even with relatively large grid spacing. After the area scanning measurement, the probe is automatically moved to a position at the interpolated maximum. The following scan can directly use this position for reference, e.g., for a finer resolution grid or the cube evaluations. The 1g and 10g peak evaluations are only available for the predefined cube 7 x 7 x 7 scans. The routines are verified and optimized for the grid dimensions used in these cube measurements. The measured volume of 30 x 30 x 30mm contains about 30g of tissue. The first procedure is an extrapolation (incl. boundary correction) to get the points between the lowest measured plane and the surface. The next step uses 3D interpolation to get all points within the measured volume in a 1mm grid (42875 points). In the last step, a 1g cube is placed numerically into the volume and its averaged SAR is calculated. This cube is the moved around until the highest averaged SAR is found. If the highest SAR is found at the edge of the measured volume, the system will issue a warning: higher SAR values might be found outside of the measured volume. In that case the cube measurement can be repeated, using the new interpolated maximum as the center.

3. DESCRIPTION OF SUPPORT UNITS

The EUT has been tested as an independent unit together with other necessary accessories or support units. The following support units or accessories were used to form a representative test configuration during the tests.

NO.	PRODUCT	BRAND	MODEL NO.	SERIAL NO.	FCC ID
1	NOTEBOOK	DELL	PP18L	29144041120	CXSMM01BRD02D330

NO.	SIGNAL CABLE DESCRIPTION OF THE ABOVE SUPPORT UNITS
1	NA

NOTE: The length of USB cable is 11.6 inch. USB cable does not affect device radiating characteristics and output power

4. DESCRIPTION OF TEST MODES AND CONFIGURATIONS

4.1. DESCRIPTION OF ANTENNA LOCATION

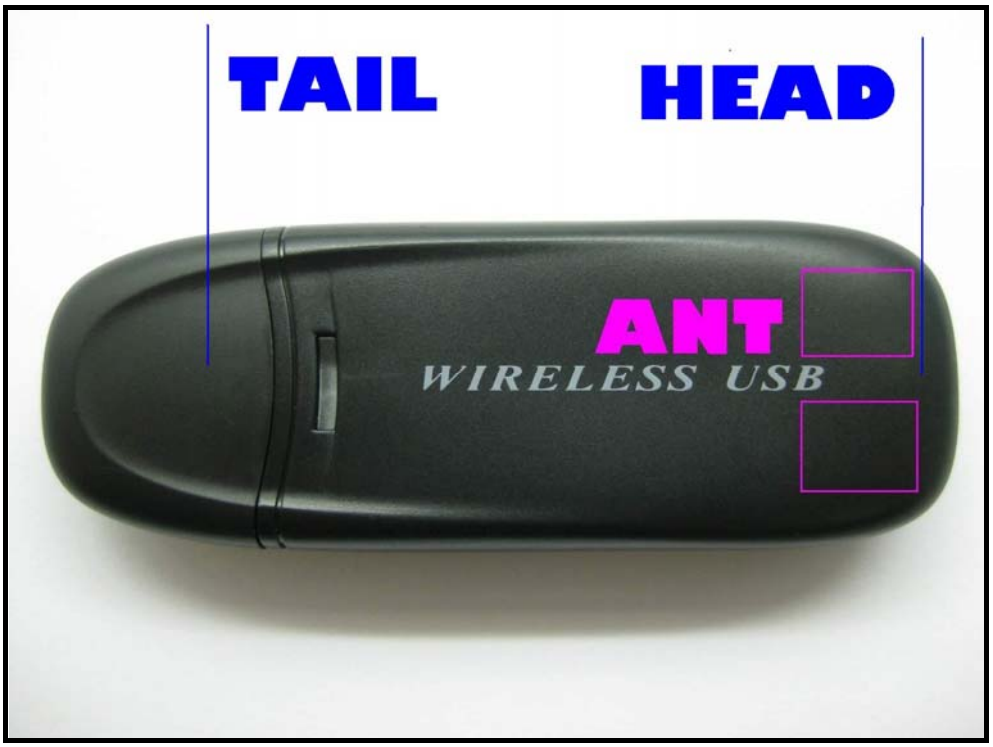

4.2. DESCRIPTION OF ASSESSMENT POSITION

The following test configurations have been applied in this test report:

A The bottom of the EUT faces to the phantom with 5mm-separation distance.	**B** The right edge of the EUT faces to the phantom with 5mm-separation distance.
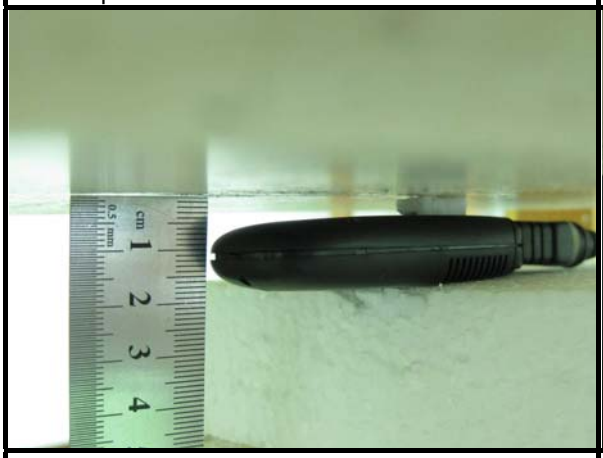	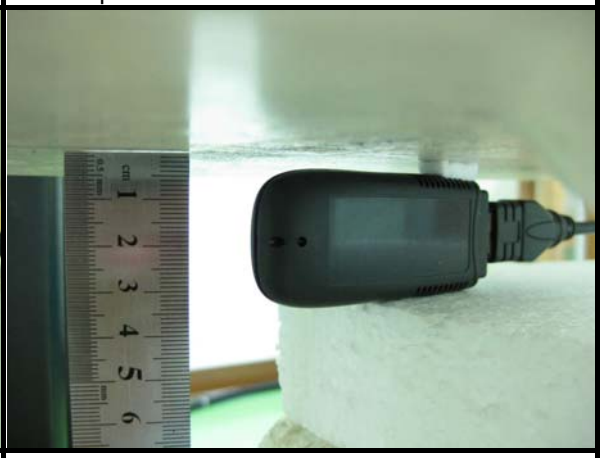
C The front of the EUT faces to the phantom with 5mm-separation distance.	**D** The left edge of the EUT faces to the phantom with 5mm-separation distance.
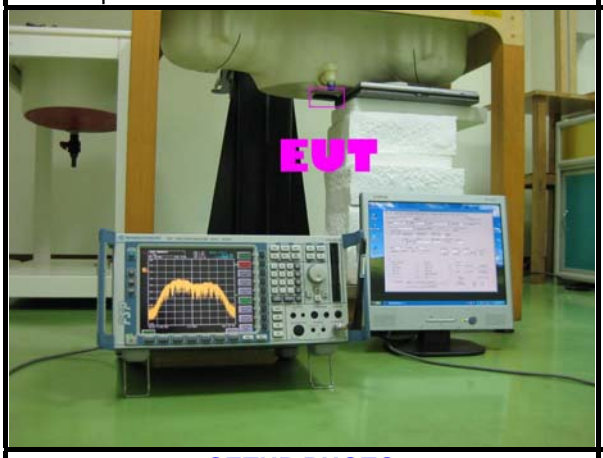	
SETUP PHOTO	

4.3. DESCRIPTION OF TEST MODE

Test tool is Ralink QAtest tool provided by client. It can control EUT to transmit continuously at specific channel, output power level, data rates and 100 % duty signal.

The EUT only supports 2 tx transmitting. Therefore, the EUT was set under 2 tx transmitting mode for testing.

“Per KDB 248277, for each frequency band, testing at higher data rates and higher order modulations is not required when the maximum average output power for each of these configurations is less than ¼ dB higher than those measured at the lowest data rate.”

Comparing output power of all modulations and data rates of each mode can find the lowest data rates has max output power. Therefore, EUT will set under lowest data rates to test.

“Per KDB 447498, when the SAR procedures require multiple channels to be tested and the 1-g SAR for the highest output channel is less than 0.8 W/kg and peak SAR is less than 1.6W/kg, where the transmission band corresponding to all channels is ≤ 100 MHz, testing for the other channels is not required.”

According to test data from table of section 4.4, SAR value of highest output power channel is less than 0.8 W / kg and peak SAR is less than 1.6W/kg. Therefore, testing for other channels is not required.

ITEM	TEST MODE	MODULATION	ASSESSMENT POSTITION	TESTED CHANNEL
FOR 2.4GHz				
1	802.11b	DBPSK	A	6
2	802.11g	BPSK		6
3	Draft 802.11n (20MHz)	BPSK		6
4	Draft 802.11n (40MHz)	BPSK		4
5	802.11b	DBPSK	B	6
6	802.11g	BPSK		6
7	Draft 802.11n (20MHz)	BPSK		6
8	Draft 802.11n (40MHz)	BPSK		4
9	802.11b	DBPSK	C	6
10	802.11g	BPSK		6
11	Draft 802.11n (20MHz)	BPSK		6
12	Draft 802.11n (40MHz)	BPSK		4
13	802.11b	DBPSK	D	6
14	802.11g	BPSK		6
15	Draft 802.11n (20MHz)	BPSK		6
16	Draft 802.11n (40MHz)	BPSK		4

ITEM	TEST MODE	MODULATION	ASSESSMENT POSTITION	TESTED CHANNEL
FOR 5.0GHz				
17	802.11a	BPSK	A	165
18	Draft 802.11n (20MHz)	BPSK		165
19	Draft 802.11n (40MHz)	BPSK		159
20	802.11a	BPSK	B	165
21	Draft 802.11n (20MHz)	BPSK		165
22	Draft 802.11n (40MHz)	BPSK		159
23	802.11a	BPSK	C	165
24	Draft 802.11n (20MHz)	BPSK		165
25	Draft 802.11n (40MHz)	BPSK		159
26	802.11a	BPSK	D	165
27	Draft 802.11n (20MHz)	BPSK		165
28	Draft 802.11n (40MHz)	BPSK		159

4.4. SUMMARY OF TEST RESULTS

FOR 2.4GHz

ITEM		1	2	3	ITEM		4
TEST MODE		802.11b	802.11g	DRAFT 802.11n (20MHz)	TEST MODE		DRAFT 802.11n (40MHz)
CHAN.	FREQ. (MHz)	MEASURED VALUE OF 1g SAR (W/kg)			CHAN.	FREQ. (MHz)	MEASURED VALUE OF 1g SAR (W/kg)
1	2412 (Low)	-	-	-	1	2422 (Low)	-
6	2437 (Mid.)	**0.424**	0.237	0.241	4	2437 (Mid.)	0.257
11	2462 (High)	-	-	-	7	2452 (High)	-

ITEM		5	6	7	ITEM		8
TEST MODE		802.11b	802.11g	DRAFT 802.11n (20MHz)	TEST MODE		DRAFT 802.11n (40MHz)
CHAN.	FREQ. (MHz)	MEASURED VALUE OF 1g SAR (W/kg)			CHAN.	FREQ. (MHz)	MEASURED VALUE OF 1g SAR (W/kg)
1	2412 (Low)	-	-	-	1	2422 (Low)	-
6	2437 (Mid.)	0.158	0.092	0.098	4	2437 (Mid.)	0.089
11	2462 (High)	-	-	-	7	2452 (High)	-

ITEM		9	10	11	ITEM		12
TEST MODE		802.11b	802.11g	DRAFT 802.11n (20MHz)	TEST MODE		DRAFT 802.11n (40MHz)
CHAN.	FREQ. (MHz)	MEASURED VALUE OF 1g SAR (W/kg)			CHAN.	FREQ. (MHz)	MEASURED VALUE OF 1g SAR (W/kg)
1	2412 (Low)	-	-	-	1	2422 (Low)	-
6	2437 (Mid.)	0.255	0.107	0.107	4	2437 (Mid.)	0.096
11	2462 (High)	-	-	-	7	2452 (High)	-

ITEM		13	14	15	ITEM		16
TEST MODE		802.11b	802.11g	DRAFT 802.11n (20MHz)	TEST MODE		DRAFT 802.11n (40MHz)
CHAN.	FREQ. (MHz)	MEASURED VALUE OF 1g SAR (W/kg)			CHAN.	FREQ. (MHz)	MEASURED VALUE OF 1g SAR (W/kg)
1	2412 (Low)	-	-	-	1	2422 (Low)	-
6	2437 (Mid.)	0.131	0.064	0.061	4	2437 (Mid.)	0.059
11	2462 (High)	-	-	-	7	2452 (High)	-

NOTE: The worst value has been marked by boldface.

FOR 5.0GHz

ITEM		17	18	ITEM		19
TEST MODE		802.11a	DRAFT 802.11n (20MHz)	TEST MODE		DRAFT 802.11n (40MHz)
CHAN.	FREQ. (MHz)	MEASURED VALUE OF 1g SAR (W/kg)		CHAN.	FREQ. (MHz)	MEASURED VALUE OF 1g SAR (W/kg)
149	5745 (Low)	-	-	151	5755 (Low)	-
157	5785 (Mid.)	-	-	159	5795 (High)	**0.669**
165	5825 (High)	0.568	0.560			

ITEM		20	21	ITEM		22
TEST MODE		802.11a	DRAFT 802.11n (20MHz)	TEST MODE		DRAFT 802.11n (40MHz)
CHAN.	FREQ. (MHz)	MEASURED VALUE OF 1g SAR (W/kg)		CHAN.	FREQ. (MHz)	MEASURED VALUE OF 1g SAR (W/kg)
149	5745 (Low)	-	-	151	5755 (Low)	-
157	5785 (Mid.)	-	-	159	5795 (High)	0.581
165	5825 (High)	0.509	0.461			

ITEM		23	24	ITEM		25
TEST MODE		802.11a	DRAFT 802.11n (20MHz)	TEST MODE		DRAFT 802.11n (40MHz)
CHAN.	FREQ. (MHz)	MEASURED VALUE OF 1g SAR (W/kg)		CHAN.	FREQ. (MHz)	MEASURED VALUE OF 1g SAR (W/kg)
149	5745 (Low)	-	-	151	5755 (Low)	-
157	5785 (Mid.)	-	-	159	5795 (High)	0.095
165	5825 (High)	0.162	0.171			

ITEM		26	27	ITEM		28
TEST MODE		802.11a	DRAFT 802.11n (20MHz)	TEST MODE		DRAFT 802.11n (40MHz)
CHAN.	FREQ. (MHz)	MEASURED VALUE OF 1g SAR (W/kg)		CHAN.	FREQ. (MHz)	MEASURED VALUE OF 1g SAR (W/kg)
149	5745 (Low)	-	-	151	5755 (Low)	-
157	5785 (Mid.)	-	-	159	5795 (High)	0.546
165	5825 (High)	0.479	0.422			

NOTE: The worst value has been marked by boldface.

4.5. CHECK FOR SCAN RESOLUTION

COMPARE WITH DIFFERENT SCAN RESOLUTION

With EUT hold on the worst case configuration (high channel in test mode 19) with no any change in position or setting, 2 scans with different resolutions are preformed to evaluate the impact on the SAR value.

Test data as below:

SCAN RESOLUTION (mm)	SAR VALUE (W/kg)
4.30	0.669
2.15	0.645

CONCLUSION: No meaningful change detected.

4.6. ENHANCED ENERGY COUPLING AT INCREASED SEPARATION DISTANCES

INITIAL POSITION:

The probe tip is positioned at the peak SAR location of in test mode 1, 5, 9, 13, 19, 22, 24, 28, at a distance of one half the probe tip diameter from the phantom surface. Under this condition to get a single sar value.

5mm INCREMENTS FROM INITIAL POSITION:

With the probe fixed at this location, the device is moved away from the phantom in 5 mm increments from the initial touching or minimum separation position. A single point SAR is measured for each of these device positions until the SAR is less than 50% of that measured at the initial position.

CHAN.	FREQ. (MHz)	DEVICE TEST POSITION MODE	INITIAL POSITION MEASURED 1g SAR (W/kg)	5mm INCREMENTS FROM INITIAL POSITION MEASURED 1g SAR (W/kg)
6 2437		11b Front	0.508	0.212
6	2437	11b Left Edge	0.317	0.108
6 2437		11b Bottom	0.977	0.385
6	2437	11b Right Edge	0.354	0.122
CHAN.	FREQ. (MHz)	DEVICE TEST POSITION MODE	INITIAL POSITION MEASURED 1g SAR (W/kg)	5mm INCREMENTS FROM INITIAL POSITION MEASURED 1g SAR (W/kg)
165	5825	11a 20 Front	0.448	0.179
159	5795	11a 40 Left Edge	1.410	0.506
159	5795	11a 40 Bottom	1.830	0.599
159	5795	11a 40 Right Edge	1.470	0.517

RESULT: No Enhancement Energy Coupling observed.

5. TEST RESULTS

5.1 TEST PROCEDURES

Use the software to control the EUT channel and transmission power. Then record the conducted power before the testing. Place the EUT to the specific test location. After the testing, must writing down the conducted power of the EUT into the report. The SAR value was calculated via the 3D spline interpolation algorithm that has been implemented in the software of DASY4 SAR measurement system manufactured and calibrated by SPEAG. According to the IEEE 1528 standards, the recommended procedure for assessing the peak spatial-average SAR value consists of the following steps:

- Power reference measurement
- Verification of the power reference measurement
- Area scan
- Zoom scan
- Power reference measurement

The area scan was performed for the highest spatial SAR location. The zoom scan with 30mm x 30mm x 30mm volume was performed for SAR value averaged over 1g and 10g spatial volumes.

In the zoom scan, the distance between the measurement point at the probe sensor location (geometric center behind the probe tip) and the phantom surface is 3mm and maintained at a constant distance of ±0.5mm during a zoom scan to determine peak SAR locations. The distance is 3mm between the first measurement point and the bottom surface of the phantom. The secondary measurement point to the bottom surface of the phantom is with 8mm separation distance. The cube size is 7 x 7 x 7 points consists of 343 points and the grid space is 5mm.

The measurement time is 0.5s at each point of the zoom scan. The probe boundary effect compensation shall be applied during the SAR test. Because of the tip of the probe to the Phantom surface separated distances are longer than half a tip probe diameter.

In the area scan, the separation distance is 3mm between the each measurement point and the phantom surface. The scan size shall be included the transmission portion of the EUT. The measurement time is the same as the zoom scan. At last the reference power drift shall be less than ±5%.

5.2 MEASURED SAR RESULTS

ENVIRONMENTAL CONDITION	Air Temperature：23.1°C, Liquid Temperature：22.0°C Humidity：58%RH		
TESTED BY	Sam Onn	DATE	Jan. 20, 2009

CHAN.	FREQ. (MHz)	TEST MODE	CONDUCTED POWER (mW)		POWER DRIFT (%)	DEVICE TEST POSITION MODE	MEASURED 1g SAR (W/kg)
			BEGIN TEST	AFTER TEST			
6	2437 (Mid.)	802.11b	180.315	178.277	-1.13	1	0.424
6	2437 (Mid.)	802.11g	387.681	383.025	-1.20	2	0.237
6	2437 (Mid.)	DRAFT 802.11n (20MHz)	387.900	382.896	-1.29	3	0.241
4	2437 (Mid.)	DRAFT 802.11n (40MHz)	385.899	380.651	-1.36	4	0.257
6	2437 (Mid.)	802.11b	180.315	177.755	-1.42	5	0.158
6	2437 (Mid.)	802.11g	387.681	381.711	-1.54	6	0.092
6	2437 (Mid.)	DRAFT 802.11n (20MHz)	387.900	381.616	-1.62	7	0.098
4	2437 (Mid.)	DRAFT 802.11n (40MHz)	385.899	379.300	-1.71	8	0.089

NOTE:

1. Test configuration of each mode is described in section 3.
2. In this testing, the limit for General Population Spatial Peak averaged over 1g, **1.6 W/kg**, is applied.
3. Please see the Appendix A for the data.
4. The variation of the EUT conducted power measured before and after SAR testing should not over 5%.

ENVIRONMENTAL CONDITION	Air Temperature：23.1°C, Liquid Temperature：22.0°C Humidity：58%RH		
TESTED BY	Sam Onn	DATE	Jan. 20, 2009

CHAN.	FREQ. (MHz)	TEST MODE	CONDUCTED POWER (mW)		POWER DRIFT (%)	DEVICE TEST POSITION MODE	MEASURED 1g SAR (W/kg)
			BEGIN TEST	AFTER TEST			
6	2437 (Mid.)	802.11b	180.315	177.051	-1.81	9	0.255
6	2437 (Mid.)	802.11g	387.681	380.315	-1.90	10	0.107
6	2437 (Mid.)	DRAFT 802.11n (20MHz)	387.900	379.948	-2.05	11	0.107
4	2437 (Mid.)	DRAFT 802.11n (40MHz)	385.899	377.679	-2.13	12	0.096
6	2437 (Mid.)	802.11b	180.315	176.330	-2.21	13	0.131
6	2437 (Mid.)	802.11g	387.681	378.570	-2.35	14	0.064
6	2437 (Mid.)	DRAFT 802.11n (20MHz)	387.900	378.358	-2.46	15	0.061
4	2437 (Mid.)	DRAFT 802.11n (40MHz)	385.899	376.059	-2.55	16	0.059

NOTE:

1. Test configuration of each mode is described in section 3.
2. In this testing, the limit for General Population Spatial Peak averaged over 1g, **1.6 W/kg**, is applied.
3. Please see the Appendix A for the data.
4. The variation of the EUT conducted power measured before and after SAR testing should not over 5%.

ENVIRONMENTAL CONDITION	Air Temperature：22.5°C, Liquid Temperature：21.7°C Humidity：61%RH		
TESTED BY	Sam Onn	DATE	Jan. 21, 2009

CHAN.	FREQ. (MHz)	TEST MODE	CONDUCTED POWER (mW)		POWER DRIFT (%)	DEVICE TEST POSITION MODE	MEASURED 1g SAR (W/kg)
			BEGIN TEST	AFTER TEST			
165	**5825 (High)**	**802.11a**	202.083	197.738	-2.15	17	0.568
165	**5825 (High)**	**DRAFT 802.11n (20MHz)**	226.220	221.085	-2.27	18	0.560
159	**5795 (High)**	**DRAFT 802.11n (40MHz)**	256.766	250.629	-2.39	19	**0.669**
165	**5825 (High)**	**802.11a**	202.083	197.112	-2.46	20	0.509
165	**5825 (High)**	**DRAFT 802.11n (20MHz)**	226.220	220.497	-2.53	21	0.461
159	**5795 (High)**	**DRAFT 802.11n (40MHz)**	256.766	250.064	-2.61	22	0.581
165	**5825 (High)**	**802.11a**	202.083	196.506	-2.76	23	0.162
165	**5825 (High)**	**DRAFT 802.11n (20MHz)**	226.220	219.750	-2.86	24	0.171
159	**5795 (High)**	**DRAFT 802.11n (40MHz)**	256.766	249.268	-2.92	25	0.095
165	**5825 (High)**	**802.11a**	202.083	195.940	-3.04	26	0.479
165	**5825 (High)**	**DRAFT 802.11n (20MHz)**	226.220	219.162	-3.12	27	0.422
159	**5795 (High)**	**DRAFT 802.11n (40MHz)**	256.766	248.370	-3.27	28	0.546

NOTE:

1. Test configuration of each mode is described in section 3.
2. In this testing, the limit for General Population Spatial Peak averaged over 1g, **1.6 W/kg**, is applied.
3. Please see the Appendix A for the data.
4. The variation of the EUT conducted power measured before and after SAR testing should not over 5%.

5.3 SAR LIMITS

HUMAN EXPOSURE	SAR (W/kg)	
	(GENERAL POPULATION / UNCONTROLLED EXPOSURE ENVIRONMENT)	(OCCUPATIONAL / CONTROLLED EXPOSURE ENVIRONMENT)
Spatial Average (whole body)	0.08	0.4
Spatial Peak (averaged over 1 g)	**1.6**	8.0
Spatial Peak (hands / wrists / feet / ankles averaged over 10 g)	4.0	20.0

NOTE:

1. This limits accord to 47 CFR 2.1093 – Safety Limit.
2. The EUT property been complied with the partial body exposure limit under the general population environment.

5.4 RECIPES FOR TISSUE SIMULATING LIQUIDS

For the measurement of the field distribution inside the SAM phantom, the phantom must be filled with 25 litters of tissue simulation liquid.

The following ingredients are used：

- **WATER-** Deionized water (pure H20), resistivity _16 M - as basis for the liquid
- **SUGAR-** Refined sugar in crystals, as available in food shops - to reduce relative permittivity
- **SALT-** Pure NaCl - to increase conductivity
- **CELLULOSE-** Hydroxyethyl-cellulose, medium viscosity (75-125mPa.s, 2% in water, 20_C),

  CAS # 54290 - to increase viscosity and to keep sugar in solution
- **PRESERVATIVE-** Preventol D-7 Bayer AG, D-51368 Leverkusen, CAS # 55965-84-9 - to prevent the spread of bacteria and molds
- **DGMBE-** Diethylenglycol-monobuthyl ether (DGMBE), Fluka Chemie GmbH, CAS # 112-34-5 - to reduce relative permittivity

THE RECIPES FOR 2450MHz SIMULATING LIQUID TABLE

INGREDIENT	HEAD SIMULATING LIQUID 2450MHz (HSL-2450)	MUSCLE SIMULATING LIQUID 2450MHz (MSL-2450)
Water	45%	69.83%
DGMBE	55%	30.17%
Salt	NA	NA
Dielectric Parameters at 22℃	f= 2450MHz ε= 39.2 ± 5% σ= 1.80 ± 5% S/m	f= 2450MHz ε= 52.7 ± 5% σ= 1.95 ± 5% S/m

THE INFORMATION FOR 5GHz SIMULATING LIQUID

The 5GHz liquids was purchased from SPEAG.

Body liquid model: HSL 5800, P/N: SL AAH 5800 AA

Head liquid model: M 5800, P/N: SL AAM 580 AD

5GHz liquids contain the following ingredients:

Water 64 - 78%

Mineral Oil 11 - 18%

Emulsifiers 9 - 15%

Additives and Salt 2 - 3%

Testing the liquids using the Agilent Network Analyzer E8358A and Agilent Dielectric Probe Kit 85070D.The testing procedure is following as

1. Turn Network Analyzer on and allow at least 30min. warm up.
2. Mount dielectric probe kit so that interconnecting cable to Network Analyzer will not be moved during measurements or calibration.
3. Pour de-ionized water and measure water temperature (±1°).
4. Set water temperature in Agilent-Software (Calibration Setup).
5. Perform calibration.
6. Validate calibration with dielectric material of known properties (e.g. polished ceramic slab with >8mm thickness ε'=10.0, ε''=0.0). If measured parameters do not fit within tolerance, repeat calibration (±0.2 for ε': ±0.1 for ε'').
7. Conductivity can be calculated from ε'' by $\sigma = \omega\ \varepsilon_0\ \varepsilon'' = \varepsilon''\ f$ [GHz] / 18.
8. Measure liquid shortly after calibration. Repeat calibration every hour.
9. Stir the liquid to be measured. Take a sample (~ 50ml) with a syringe from the center of the liquid container.
10. Pour the liquid into a small glass flask. Hold the syringe at the bottom of the flask to avoid air bubbles.
11. Put the dielectric probe in the glass flask. Check that there are no air bubbles in front of the opening in the dielectric probe kit.
12. Perform measurements.
13. Adjust medium parameters in DASY4 for the frequencies necessary for the measurements (‘Setup Config’, select medium (e.g. Brain 900MHz) and press ‘Option’-button.
14. Select the current medium for the frequency of the validation (e.g. Setup Medium Brain 900MHz).

FOR 2.4GHz BAND SIMULATING LIQUID

LIQUID TYPE		MSL-2450		
SIMULATING LIQUID TEMP.		22.0		
TEST DATE		Jan. 20, 2009		
TESTED BY		Sam Onn		
FREQ. (MHz)	**LIQUID PARAMETER**	**STANDARD VALUE**	**MEASUREMENT VALUE**	**ERROR PERCENTAGE (%)**
2437.0 52.70	Permitivity		54.30	3.04
2450.0	(ε)	52.70 54.20		2.85
2437.0 1.94	Conductivity		1.97	1.55
2450.0	(σ) S/m	1.95 1.98		1.54
Dielectric Parameters Required at 22℃		**f= 2450MHz ε= 52.7 ± 5% σ= 1.95 ± 5% S/m**		

FOR WLAN 5GHz BAND SIMULATING LIQUID

LIQUID TYPE		MSL-5800		
SIMULATING LIQUID TEMP.		21.7		
TEST DATE		Jan. 21, 2009		
TESTED BY		Sam Onn		
FREQ. (MHz)	**LIQUID PARAMETER**	**STANDARD VALUE**	**MEASUREMENT VALUE**	**ERROR PERCENTAGE (%)**
5795.0 48.20	Permitivity		49.60	2.90
5800.0 48.20	(ε)		49.50	2.70
5825.0		48.20 49.50		2.70
5795.0	Conductivity	5.99 6.16 2.84		
5800.0	(σ)	6.00 6.17 2.83		
5825.0	S/m	6.03 6.21 2.99		
Dielectric Parameters Required at 22℃		**f= 2450MHz ε= 52.7 ± 5% σ= 1.95 ± 5% S/m**		

5.5 TEST EQUIPMENT FOR TISSUE PROPERTY

ITEM	NAME	BRAND	TYPE	SERIES NO.	DATE OF CALIBRATION	DUE DATE OF CALIBRATION
1	Network Analyzer	Agilent	E5071C	MY46104190	Apr. 11, 2008	Apr. 10, 2009
2	Dielectric Probe	Agilent	85070D	US01440176	NA	NA

NOTE:

1. Before starting, all test equipment shall be warmed up for 30min.
2. The tolerance (k=1) specified by Agilent for general dielectric measurements, deriving from inaccuracies in the calibration data, analyzer drift, and random errors, are usually ±2.5% and ±5% for measured permittivity and conductivity, respectively. However, the tolerances for the conductivity is smaller for material with large loss tangents, i.e., less than ±2.5% (k=1). It can be substantially smaller if more accurate methods are applied.

6. SYSTEM VALIDATION

The system validation was performed in the flat phantom with equipment listed in the following table. Since the SAR value is calculated from the measured electric field, dielectric constant and conductivity of the body tissue and the SAR is proportional to the square of the electric field. So, the SAR value will be also proportional to the RF power input to the system validation dipole under the same test environment. In our system validation test, 250mW RF input power was used.

6.1 TEST EQUIPMENT

ITEM	NAME	BRAND	TYPE	SERIES NO.	DATE OF CALIBRATION	DUE DATE OF CALIBRATION
1	SAM Phantom	S & P	QD000 P40 CA	TP-1150	NA	NA
2	Signal Generator	Anritsu	68247B	984703	May 27, 2008	May 26, 2009
3	E-Field Probe	S & P	EX3DV3	3506	Sep. 30, 2008	Sep. 29, 2009
4	DAE	S & P	DAE	579	Mar. 13, 2008	Mar. 12, 2009
5	Robot Positioner	Staubli Unimation	NA	NA	NA	NA
6	Validation Dipole	S & P	D2450V2	737	Apr. 22, 2008	Apr. 21, 2009
7	Validation Dipole	S & P	D5GHzV2	1018	Apr. 22, 2008	Apr. 21, 2009
8	Power Meter	Agilent	E4416A	GB41291763	Sep. 28, 2008	Sep. 29, 2009
9	Power Sensor	Agilent	E9327A	US40441181	Sep. 28, 2008	Sep. 29, 2009

NOTE: Before starting the measurement, all test equipment shall be warmed up for 30min.

6.2 TEST PROCEDURE

Before the system performance check, we need only to tell the system which components (probe, medium, and device) are used for the system performance check; the system will take care of all parameters. The dipole must be placed beneath the flat section of the SAM Twin Phantom with the correct distance holder in place. The distance holder should touch the phantom surface with a light pressure at the reference marking (little cross) and be oriented parallel to the long side of the phantom. Accurate positioning is not necessary, since the system will search for the peak SAR location, except that the dipole arms should be parallel to the surface. The device holder for mobile phones can be left in place but should be rotated away from the dipole.

1. The ”Power Reference Measurement” and ”Power Drift Measurement” jobs are located at the beginning and end of the batch process. They measure the field drift at one single point in the liquid over the complete procedure. The indicated drift is mainly the variation of the amplifier output power. If it is too high (above ±0.1 dB), the system performance check should be repeated; some amplifiers have very high drift during warm-up. A stable amplifier gives drift results in the DASY system below ±0.02dB.

2. The ”Surface Check” job tests the optical surface detection system of the DASY system by repeatedly detecting the surface with the optical and mechanical surface detector and comparing the results. The output gives the detecting heights of both systems, the difference between the two systems and the standard deviation of the detection repeatability. Air bubbles or refraction in the liquid due to separation of the sugar-water mixture gives poor repeatability (above ±0.1mm). In that case it is better to abort the system performance check and stir the liquid. The difference between the optical surface detection and the actual surface depends on the probe and is specified with each probe. (It does not depend on the surface reflectivity or the probe angle to the surface within ±30°.) However, varying breaking indices of different liquid compositions might also influence the distance. If the indicated difference varies from the actual setting, the probe parameter ”optical surface

3. The ”Area Scan” job measures the SAR above the dipole on a plane parallel to the surface. It is used to locate the approximate location of the peak SAR. The proposed scan uses large grid spacing for faster measurement; due to the symmetric field, the peak detection is reliable. If a finer graphic is desired, the grid spacing can be reduced. Grid spacing and orientation have no influence on the SAR result.

4. The ”Zoom Scan” job measures the field in a volume around the peak SAR value assessed in the previous ”Area Scan” job (for more information see the application note on SAR evaluation).

About the validation dipole positioning uncertainty, the constant and low loss dielectric spacer is used to establish the correct distance between the top surface of the dipole and the bottom surface of the phantom, the error component introduced by the uncertainty of the distance between the liquid (i.e., phantom shell) and the validation dipole in the DASY4 system is less than ±0.1mm.

$$SAR_{tolerance}[\%] = 100 \times (\frac{(a+d)^2}{a^2} - 1)$$

As the closest distance is 10mm, the resulting tolerance $SAR_{tolerance}$[%] is <2%.

6.3 VALIDATION RESULTS

SYSTEM VALIDATION TEST OF SIMULATING LIQUID					
FREQUENCY (MHz)	**REQUIRED SAR (mW/g)**	**MEASURED SAR (mW/g)**	**DEVIATION (%)**	**SEPARATION DISTANCE**	**TESTED DATE**
MSL2450	12.80 (1g)	13.30	3.91	10mm	Jan. 20, 2009
MSL5800	7.37 (1g)	7.23	-1.90	10mm	Jan. 21, 2009
TESTED BY	Sam Onn				

NOTE: Please see Appendix for the photo of system validation test.

6.4 SYSTEM VALIDATION UNCERTAINTIES (FOR 2.4GHz)

In the table below, the system validation uncertainty with respect to the analytically assessed SAR value of a dipole source as given in the IEEE 1528 standard is given. This uncertainty is smaller than the expected uncertainty for mobile phone measurements due to the simplified setup and the symmetric field distribution.

Error Description	Tolerance (±%)	Probability Distribution	Divisor	(C_i)		Standard Uncertainty (±%)		(v_i)
				(1g)	(10g)	(1g)	(10g)	
Measurement System								
Probe Calibration	5.50	Normal	1	1	1	5.50	5.50	∞
Axial Isotropy	4.70	Rectangular	$\sqrt{3}$	0.7	0.7	1.90	1.90	∞
Hemispherical Isotropy	9.60	Rectangular	$\sqrt{3}$	0.7	0.7	3.88	3.88	∞
Boundary effects	1.00	Rectangular	$\sqrt{3}$	1	1	0.58	0.58	∞
Linearity	4.70	Rectangular	$\sqrt{3}$	1	1	2.71	2.71	∞
System Detection Limits	1.00	Rectangular	$\sqrt{3}$	1	1	0.58	0.58	∞
Readout Electronics	0.30	Normal	1	1	1	0.30	0.30	∞
Response Time	0.80	Rectangular	$\sqrt{3}$	1	1	0.46	0.46	∞
Integration Time	2.60	Rectangular	$\sqrt{3}$	1	1	1.50	1.50	∞
RF Ambient Noise	3.00	Rectangular	$\sqrt{3}$	1	1	1.73	1.73	∞
RF Ambient Reflections	3.00	Rectangular	$\sqrt{3}$	1	1	1.73	1.73	∞
Probe Positioner	0.40	Rectangular	$\sqrt{3}$	1	1	0.23	0.23	∞
Probe Positioning	2.90	Rectangular	$\sqrt{3}$	1	1	1.67	1.67	∞
Max. SAR Eval.	1.00	Rectangular	$\sqrt{3}$	1	1	0.58	0.58	∞
Dipole Related								
Dipole Axis to Liquid Distance	2.00	Rectangular	$\sqrt{3}$	1	1	1.15	1.15	145
Input Power Drift	5.00	Rectangular	$\sqrt{3}$	1	1	2.89	2.89	∞
Phantom and Tissue parameters								
Phantom Uncertainty	4.00	Rectangular	$\sqrt{3}$	1	1	2.31	2.31	∞
Liquid Conductivity (target)	5.00	Rectangular	$\sqrt{3}$	0.64	0.43	1.85	1.24	∞
Liquid Conductivity (measurement)	2.55	Normal	1	0.64	0.43	1.63	1.10	∞
Liquid Permittivity (target)	5.00	Rectangular	$\sqrt{3}$	0.6	0.49	1.73	1.41	∞
Liquid Permittivity (measurement)	3.65	Normal	1	0.6	0.49	2.19	1.79	∞
Combined Standard Uncertainty						**9.88**	**9.57**	
Coverage Factor for 95%						**Kp=2**		
Expanded Uncertainty (K=2)						**19.75**	**19.14**	

NOTE: About the system validation uncertainty assessment, please reference the section 7.

6.5 SYSTEM VALIDATION UNCERTAINTIES (FOR 5.0GHz)

Error Description	Tolerance (±%)	Probability Distribution	Divisor	(C_i)		Standard Uncertainty (±%)		(v_i)
				(1g)	(10g)	(1g)	(10g)	
Measurement System								
Probe Calibration	6.55	Normal	1	1	1	6.55	6.55	∞
Axial Isotropy	4.70	Rectangular	$\sqrt{3}$	0.7	0.7	1.90	1.90	∞
Hemispherical Isotropy	9.60	Rectangular	$\sqrt{3}$	0.7	0.7	3.88	3.88	∞
Boundary effect	2.00	Rectangular	$\sqrt{3}$	1	1	1.15	1.15	∞
Linearity	4.70	Rectangular	$\sqrt{3}$	1	1	2.71	2.71	∞
System Detection Limit	1.00	Rectangular	$\sqrt{3}$	1	1	0.58	0.58	∞
Readout Electronics	0.30	Normal	1	1	1	0.30	0.30	∞
Response Time	0.80	Rectangular	$\sqrt{3}$	1	1	0.46	0.46	∞
Integration Time	2.60	Rectangular	$\sqrt{3}$	1	1	1.50	1.50	∞
RF Ambient Conditions	3.00	Rectangular	$\sqrt{3}$	1	1	1.73	1.73	∞
Probe Positioner	3.00	Rectangular	$\sqrt{3}$	1	1	1.73	1.73	∞
Probe positioning	0.80	Rectangular	$\sqrt{3}$	1	1	0.46	0.46	∞
Algorithms for Max. SAR Evaluation	9.90	Rectangular	$\sqrt{3}$	1	1	5.72	5.72	∞
Dipole								
Dipole Axis to Liquid Distance	2.00	Rectangular	$\sqrt{3}$	1	1	1.15	1.15	145
Input power and SAR drift measurement	5.00	Rectangular	$\sqrt{3}$	1	1	2.89	2.89	∞
Phantom and Tissue Parameters								
Phantom Uncertainty	4.00	Rectangular	$\sqrt{3}$	1	1	2.31	2.31	∞
Liquid Conductivity (target)	5.00	Rectangular	$\sqrt{3}$	0.64	0.43	1.85	1.24	∞
Liquid Conductivity (measurement)	2.16	Normal	1	0.64	0.43	1.38	0.93	∞
Liquid Permittivity (target)	5.00	Rectangular	$\sqrt{3}$	0.6	0.49	1.73	1.41	∞
Liquid Permittivity (measurement)	2.09	Normal	1	0.6	0.49	1.25	1.02	∞
Combined Standard Uncertainty						**11.93**	**11.74**	
Coverage Factor for 95%						kp=2		
Expanded Uncertainty (K=2)						**23.85**	**23.48**	

Table 6.1

NOTE: 1. Table 6.1 Uncertainty of the system performance check in the 5-6GHz range. Probe calibration error reflects uncertainty of the EX3DV3 probe conversion factor at Calibration Frequency.

2. About the system validation uncertainty assessment, please reference the section 7.

7. MEASUREMENT SAR PROCEDURE UNCERTAINTIES

The assessment of spatial peak SAR of the hand handheld devices is according to IEEE 1528 / EN 62209-1. All testing situation shall be met below these requirements.

- The system is used by an experienced engineer who follows the manual and the guidelines taught during the training provided by SPEAG.
- The probe has been calibrated within the requested period and the stated uncertainty for the relevant frequency bands does not exceed 4.8% (k=1).
- The validation dipole has been calibrated within the requested period and the system performance check has been successful.
- The DAE unit has been calibrated within the within the requested period.
- The minimum distance between the probe sensor and inner phantom shell is selected to be between 4 and 5mm.
- The operational mode of the DUT is CW, CDMA, FDMA or TDMA (GSM, DCS, PCS, IS136 and PDC) and the measurement/integration time per point is >500 ms.
- The dielectric parameters of the liquid have been assessed using Agilent 85070D dielectric probe kit or a more accurate method.
- The dielectric parameters are within 5% of the target values.
- The DUT has been positioned as described in section 3.

7.1. PROBE CALIBRATION UNCERTAINTY

SPEAG conducts the probe calibration in compliance with international and national standards (e.g. IEEE 1528, EN 62209-1, IEC 62209, etc.) under ISO17025. The uncertainties are stated on the calibration certificate. For the most relevant frequency bands, these values do not exceed 4.8% (k=1). If evaluations of other bands are performed for which the uncertainty exceeds these values, the uncertainty tables given in the summary have to be revised accordingly.

7.2. ISOTROPY UNCERTAINTY

The axial isotropy tolerance accounts for probe rotation around its axis while the hemispherical isotropy error includes all probe orientations and field polarizations. These parameters are assessed by SPEAG during initial calibration. In 2001, SPEAG further tightened its quality controls and warrants that the maximal deviation from axial isotropy is ±0.20dB, while the maximum deviation of hemispherical isotropy is ±0.40dB, corresponding to ±4.7% and ±9.6%, respectively. A weighting factor of cp equal to 0.5 can be applied, since the axis of the probe deviates less than 30 degrees from the normal surface orientation.

7.3. BOUNDARY EFFECT UNCERTAINTY

The effect can be estimated according to the following error approximation formula

$$SAR_{tolerance}[\%] = SAR_{be}[\%] \times \frac{(d_{be} + d_{step})^2}{2d_{step}} \frac{e^{-\frac{d_{be}}{\delta/2}}}{\delta/2}$$

$$d_{be} + d_{step} < 10mm$$

The parameter d_{be} is the distance in mm between the surface and the closest measurement point used in the averaging process; d_{step} is the separation distance in mm between the first and second measurement points; δ is the minimum penetration depth in mm within the head tissue equivalent liquids (i.e., δ= 13.95mm at 3GHz); SAR_{be} is the deviation between the measured SAR value at the distance d_{be} from the boundary and the wave-guide analytical value SAR_{ref}.DASY4 applies a boundary effect compensation algorithm according to IEEE 1528, which is possible since the axis of the probe never deviates more than 30 degrees from the normal surface orientation. SAR_{be}[%] is assessed during the calibration process and SPEAG warrants that the uncertainty at distances larger than 4mm is always less than 1%.In summary, the worst case boundary effect SAR tolerance[%] for scanning distances larger than 4mm is < ± 0.8%.

7.4. PROBE LINEARITY UNCERTAINTY

Field probe linearity uncertainty includes errors from the assessment and compensation of the diode compression effects for CW and pulsed signals with known duty cycles. This error is assessed using the procedure described in IEEE 1528 / EN 62209-1. For SPEAG field probes, the measured difference between CW and pulsed signals, with pulse frequencies between 10Hz and 1kHz and duty cycles between 1 and 100, is < ±0.20dB (< ±4.7%).

7.5. READOUT ELECTRONICS UNCERTAINTY

All uncertainties related to the probe readout electronics (DAE unit), including the gain and linearity of the instrumentation amplifier, its loading effect on the probe, and accuracy of the signal conversion algorithm, have been assessed accordingly to IEEE 1528 / EN 62209-1.The combination (root-sum-square RSS method) of these components results in an overall maximum error of ±1.0%.

7.6. RESPONSE TIME UNCERTAINTY

The time response of the field probes is assessed by exposing the probe to a well-controlled electric field producing SAR larger than 2.0W/kg at the tissue medium surface. The signal response time is evaluated as the time required by the system to reach 90% of the expected final value after an on/of switch of the power source. Analytically, it can be expressed as:

$$SAR_{tolerance}[\%] = 100 \times \left(\frac{T_m}{T_m + \tau e^{-T_m/\tau} - \tau} - 1\right)$$

where Tm is 500 ms, i.e., the time between measurement samples, and $_T$ the time constant. The response time $_T$ of SPEAG's probes is <5ms. In the current implementation, DASY4 waits longer than 100 ms after having reached the grid point before starting a measurement, i.e., the response time uncertainty is negligible.

7.7. INTEGRATION TIME UNCERTAINTY

If the device under test does not emit a CW signal, the integration time applied to measure the electric field at a specific point may introduce additional uncertainties due to the discretization and can be assessed as follows

$$SAR_{tolerance}[\%] = 100 \times \sum_{allsub-frames} \frac{t_{frame}}{t_{integration}} \frac{slot_{idle}}{slot_{total}}$$

The tolerances for the different systems are given in Table 7.1, whereby the worst-case $SAR_{tolerance}$ is 2.6%.

System	$SAR_{tolerance}$ %
CW	0
CDMA*	0
WCDMA*	0
FDMA	0
IS-136	2.6
PDC	2.6
GSM/DCS/PCS	1.7
DECT	1.9
Worst-Case	2.6

TABLE 7.1

7.8. PROBE POSITIONER MECHANICAL TOLERANCE

The mechanical tolerance of the field probe positioner can introduce probe positioning uncertainties. The resulting SAR uncertainty is assessed by comparing the SAR obtained according to the specifications of the probe positioner with respect to the actual position defined by the geometric enter of the probe sensors. The tolerance is determined as:

$$SAR_{tolerance}[\%] = 100 \times \frac{d_{ph}}{\delta/2}$$

The specified repeatability of the RX robot family used in DASY4 systems is ±25µm. The absolute accuracy for short distance movements is better than ±0.1mm, i.e., the $SAR_{tolerance}$[%] is better than 1.5% (rectangular).

7.9. PROBE POSITIONING

The probe positioning procedures affect the tolerance of the separation distance between the probe tip and the phantom surface as:

$$SAR_{tolerance}[\%] = 100 \times \frac{d_{ph}}{\delta/2}$$

where d_{ph} is the maximum deviation of the distance between the probe tip and the phantom surface. The optical surface detection has a precision of better than 0.2mm, resulting in an $SAR_{tolerance}$[%] of <2.9% (rectangular distribution). Since the mechanical detection provides better accuracy, 2.9% is a worst-case figure for DASY4 system.

7.10. PHANTOM UNCERTAINTY

The SAR measurement uncertainty due to SPEAG phantom shell production tolerances has been evaluated using

$$SAR_{tolerance}[\%] \cong 100 \times \frac{2d}{a}, \qquad d << a$$

For a maximum deviation d of the inner and outer shell of the phantom from that specified in the CAD file of ±0.2mm, and a 10mm spacing a between source and tissue liquid, the calculated phantom uncertainty is ±4.0%.

7.11. DASY4 UNCERTAINTY BUDGET (FOR 2.4GHz)

Error Description	Tolerance (±%)	Probability Distribution	Divisor	(C_i)		Standard Uncertainty (±%)		(v_i)
				(1g)	(10g)	(1g)	(10g)	
Measurement Equipment								
Probe Calibration	5.50	Normal	1	1	1	5.50	5.50	∞
Axial Isotropy	4.70	Rectangular	$\sqrt{3}$	0.7	0.7	1.90	1.90	∞
Hemispherical Isotropy	9.60	Rectangular	$\sqrt{3}$	0.7	0.7	3.88	3.88	∞
Boundary effects	1.00	Rectangular	$\sqrt{3}$	1	1	0.58	0.58	∞
Linearity	4.70	Rectangular	$\sqrt{3}$	1	1	2.71	2.71	∞
System Detection Limits	1.00	Rectangular	$\sqrt{3}$	1	1	0.58	0.58	∞
Readout Electronics	0.30	Normal	1	1	1	0.30	0.30	∞
Response Time	0.80	Rectangular	$\sqrt{3}$	1	1	0.46	0.46	∞
Integration Time	2.60	Rectangular	$\sqrt{3}$	1	1	1.50	1.50	∞
RF Ambient Noise	3.00	Rectangular	$\sqrt{3}$	1	1	1.73	1.73	∞
RF Ambient Reflections	3.00	Rectangular	$\sqrt{3}$	1	1	1.73	1.73	∞
Probe Positioner	0.40	Rectangular	$\sqrt{3}$	1	1	0.23	0.23	∞
Probe Positioning	2.90	Rectangular	$\sqrt{3}$	1	1	1.67	1.67	∞
Max. SAR Eval.	1.00	Rectangular	$\sqrt{3}$	1	1	0.58	0.58	∞
Test Sample Related								
Device Positioning	0.69	Normal	1	1	1	0.69	0.69	10
Device Holder	3.60	Normal	1	1	1	3.60	3.60	5
Power Drift	5.00	Rectangular	$\sqrt{3}$	1	1	2.89	2.89	∞
Phantom and Tissue parameters								
Phantom Uncertainty	4.00	Rectangular	$\sqrt{3}$	1	1	2.31	2.31	∞
Liquid Conductivity (target)	5.00	Rectangular	$\sqrt{3}$	0.64	0.43	1.85	1.24	∞
Liquid Conductivity (measurement)	2.55	Normal	1	0.64	0.43	1.63	1.10	∞
Liquid Permittivity (target)	5.00	Rectangular	$\sqrt{3}$	0.6	0.49	1.73	1.41	∞
Liquid Permittivity (measurement)	3.65	Normal	1	0.6	0.49	2.19	1.79	∞
Combined Standard Uncertainty						**10.47**	**10.18**	
Coverage Factor for 95%						**kp=2**		
Expanded Uncertainty (K=2)						**20.94**	**20.37**	

TABLE 7.2

The table 7.2: Worst-Case uncertainty budget for DASY4 assessed according to IEEE 1528. The budget is valid for the frequency range 300MHz ~ 3GHz and represents a worst-case analysis. For specific tests and configurations, the uncertainty could be considerable smaller.

7.12.DASY4 UNCERTAINTY BUDGET (FOR 5 ~ 6GHz)

Error Description	Tolerance (±%)	Probability Distribution	Divisor	(C_i)		Standard Uncertainty (±%)		(v_i)
				(1g)	(10g)	(1g)	(10g)	
Measurement System								
Probe Calibration	6.55	Normal	1	1	1	6.55	6.55	∞
Axial Isotropy	4.70	Rectangular	$\sqrt{3}$	0.7	0.7	1.90	1.90	∞
Hemispherical Isotropy	9.60	Rectangular	$\sqrt{3}$	0.7	0.7	3.88	3.88	∞
Boundary effects	2.00	Rectangular	$\sqrt{3}$	1	1	1.15	1.15	∞
Linearity	4.70	Rectangular	$\sqrt{3}$	1	1	2.71	2.71	∞
System Detection Limits	1.00	Rectangular	$\sqrt{3}$	1	1	0.58	0.58	∞
Readout Electronics	0.30	Normal	1	1	1	0.30	0.30	∞
Response Time	0.80	Rectangular	$\sqrt{3}$	1	1	0.46	0.46	∞
Integration Time	2.60	Rectangular	$\sqrt{3}$	1	1	1.50	1.50	∞
RF Ambient Noise	3.00	Rectangular	$\sqrt{3}$	1	1	1.73	1.73	∞
RF Ambient Reflections	3.00	Rectangular	$\sqrt{3}$	1	1	1.73	1.73	∞
Probe Positioner	0.80	Rectangular	$\sqrt{3}$	1	1	0.46	0.46	∞
Probe Positioning	9.90	Rectangular	$\sqrt{3}$	1	1	5.72	5.72	∞
Max. SAR Eval.	4.00	Rectangular	$\sqrt{3}$	1	1	2.31	2.31	∞
Test EUT Related								
Device Positioning	0.79	Normal	1	1	1	0.79	0.79	10
Device Holder	3.60	Normal	1	1	1	3.60	3.60	5
Power Drift	5.00	Rectangular	$\sqrt{3}$	1	1	2.89	2.89	∞
Phantom and Tissue Parameters								
Phantom Uncertainty	4.00	Rectangular	$\sqrt{3}$	1	1	2.31	2.31	∞
Liquid Conductivity (target)	5.00	Rectangular	$\sqrt{3}$	0.64	0.43	1.85	1.24	∞
Liquid Conductivity (measurement)	3.61	Normal	1	0.64	0.43	2.31	1.55	∞
Liquid Permittivity (target)	5.00	Rectangular	$\sqrt{3}$	0.6	0.49	1.73	1.41	∞
Liquid Permittivity (measurement)	3.53	Normal	1	0.6	0.49	2.12	1.73	∞
Combined Standard Uncertainty						**12.68**	**12.39**	
Coverage Factor for 95%						**Kp=2**		
Expanded STD Uncertainty						**25.37**	**24.78**	

TABLE 7.3

The table 7.3: Worst-Case uncertainty budget for DASY4 valid for the frequency range 5 ~ 6 GHz. Probe calibration error reflects uncertainty of the narrow-bandwidth EX3DV3 probe conversion factor (±50 MHz).

8. INFORMATION ON THE TESTING LABORATORIES

We, Bureau Veritas Consumer Products Services (H.K.) Ltd., Taoyuan Branch, were founded in 1988 to provide our best service in EMC, Radio, Telecom and Safety consultation. Our laboratories are accredited and approved by the following approval agencies according to ISO/IEC 17025.

USA	FCC, NVLAP
GERMANY	TUV Rheinland
JAPAN	VCCI
NORWAY	NEMKO
CANADA	INDUSTRY CANADA, CSA
R.O.C.	TAF, BSMI, NCC
NETHERLANDS	Telefication
SINGAPORE	GOST-ASIA (MOU)
RUSSIA	CERTIS (MOU)

Copies of accreditation certificates of our laboratories obtained from approval agencies can be downloaded from our web site: www.adt.com.tw/index.5/phtml. If you have any comments, please feel free to contact us at the following:

Linko EMC/RF Lab:
Tel: 886-2-26052180
Fax: 886-2-26051924

Hsin Chu EMC/RF Lab:
Tel: 886-3-5935343
Fax: 886-3-5935342

Hwa Ya EMC/RF/Safety/Telecom Lab:
Tel: 886-3-3183232
Fax: 886-3-3185050

Web Site: www.adt.com.tw

The address and road map of all our labs can be found in our web site also.

---END---

APPENDIX A: TEST DATA

Liquid Level Photo

MSL 2450MHz D=152mm

MSL 5800MHz D=150mm

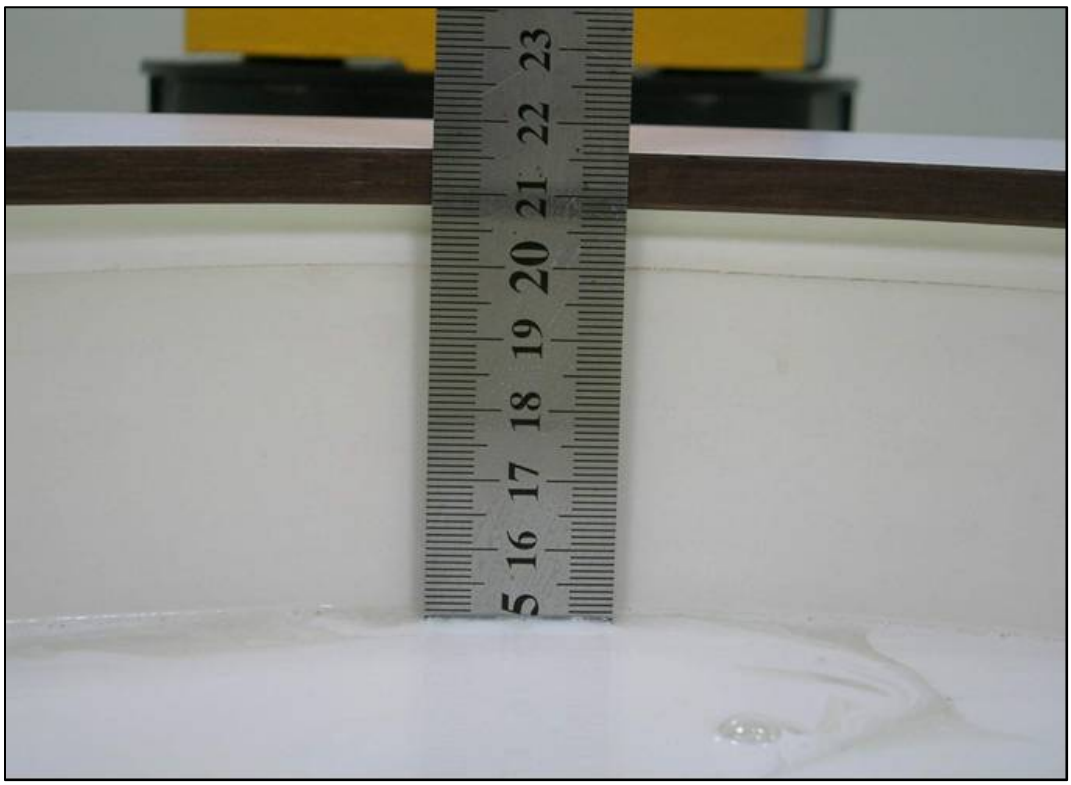

Date/Time: 2009/1/20 16:06:12

Test Laboratory: Bureau Veritas ADT

M01-11b-Ch6

DUT: 802.11a/b/g/n dual band WLAN USB Dongle ; Type: WLAN-1501

Communication System: 802.11b ; Frequency: 2437 MHz ; Duty Cycle: 1:1 ; Modulation type: DBPSK
Medium: MSL2450 Medium parameters used: f = 2437 MHz; σ = 1.97 mho/m; ε_r = 54.3; ρ = 1000 kg/m^3
Phantom section: Flat Section ; Separation distance : 5 mm (The bottom side of the EUT to the Phantom)

DASY4 Configuration:
- Probe: EX3DV3 - SN3506 ; ConvF(7.52, 7.52, 7.52) ; Calibrated: 2008/9/30
- Sensor-Surface: 3mm (Mechanical Surface Detection)
- Electronics: DAE3 Sn579 ; Calibrated: 2008/3/13
- Phantom: SAM 12 ; Type: SAM V4.0 ; Serial: TP 1202
- Measurement SW: DASY4, V4.7 Build 53 ; Postprocessing SW: SEMCAD, V1.8 Build 172

Mid Channel 6/Area Scan (5x7x1): Measurement grid: dx=15mm, dy=15mm
Maximum value of SAR (measured) = 0.529 mW/g

Mid Channel 6/Zoom Scan (7x7x7) (7x7x7)/Cube 0: Measurement grid: dx=5mm, dy=5mm, dz=5mm
Reference Value = 9.61 V/m
Peak SAR (extrapolated) = 0.736 W/kg
SAR(1 g) = 0.424 mW/g; SAR(10 g) = 0.224 mW/g
Maximum value of SAR (measured) = 0.537 mW/g

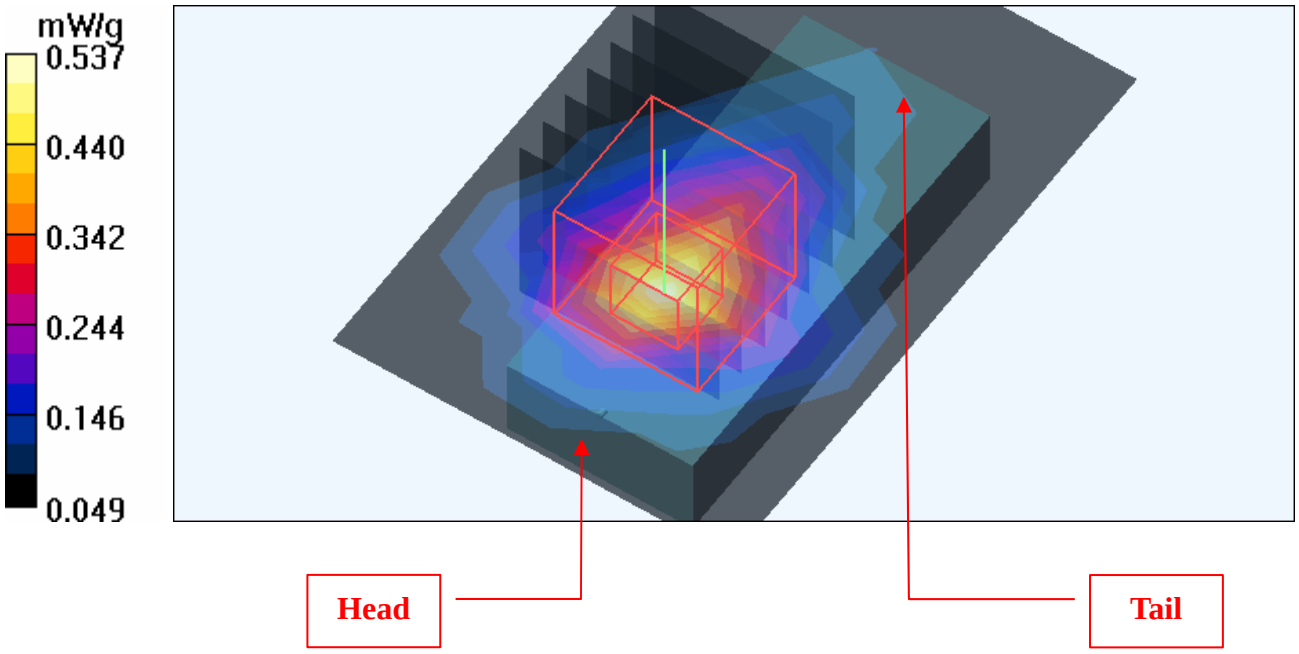

Date/Time: 2009/1/20 16:25:48

Test Laboratory: Bureau Veritas ADT

M02-11g-Ch6

DUT: 802.11a/b/g/n dual band WLAN USB Dongle ; Type: WLAN-1501

Communication System: 802.11g ; Frequency: 2437 MHz ; Duty Cycle: 1:1 ; Modulation type: BPSK
Medium: MSL2450 Medium parameters used: f = 2437 MHz; σ = 1.97 mho/m; ε_r = 54.3; ρ = 1000 kg/m^3
Phantom section: Flat Section ; Separation distance : 5 mm (The bottom side of the EUT to the Phantom)

DASY4 Configuration:
- Probe: EX3DV3 - SN3506 ; ConvF(7.52, 7.52, 7.52) ; Calibrated: 2008/9/30
- Sensor-Surface: 3mm (Mechanical Surface Detection)
- Electronics: DAE3 Sn579 ; Calibrated: 2008/3/13
- Phantom: SAM 12 ; Type: SAM V4.0 ; Serial: TP 1202
- Measurement SW: DASY4, V4.7 Build 53 ; Postprocessing SW: SEMCAD, V1.8 Build 172

Mid Channel 6/Area Scan (5x7x1): Measurement grid: dx=15mm, dy=15mm
Maximum value of SAR (measured) = 0.293 mW/g

Mid Channel 6/Zoom Scan (7x7x7) (7x7x7)/Cube 0: Measurement grid: dx=5mm, dy=5mm, dz=5mm
Reference Value = 7.70 V/m
Peak SAR (extrapolated) = 0.395 W/kg
SAR(1 g) = 0.237 mW/g; SAR(10 g) = 0.136 mW/g
Maximum value of SAR (measured) = 0.291 mW/g

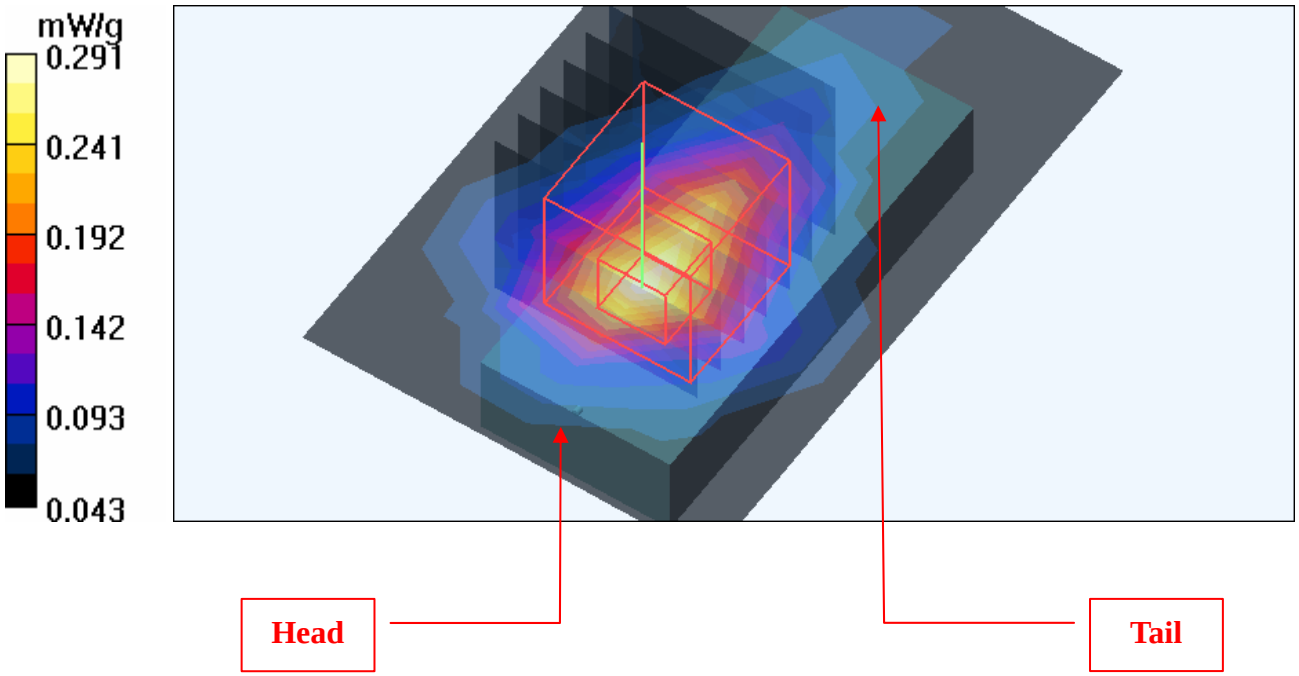

Date/Time: 2009/1/20 16:42:12

Test Laboratory: Bureau Veritas ADT

M03-11n 20M-Ch6

DUT: 802.11a/b/g/n dual band WLAN USB Dongle ; Type: WLAN-1501

Communication System: 2.4G 11n span20 ; Frequency: 2437 MHz ; Duty Cycle: 1:1 ; Modulation type: BPSK
Medium: MSL2450 Medium parameters used: f = 2437 MHz; σ = 1.97 mho/m; ε_r = 54.3; ρ = 1000 kg/m^3
Phantom section: Flat Section ; Separation distance : 5 mm (The bottom side of the EUT to the Phantom)

DASY4 Configuration:
- Probe: EX3DV3 - SN3506 ; ConvF(7.52, 7.52, 7.52) ; Calibrated: 2008/9/30
- Sensor-Surface: 3mm (Mechanical Surface Detection)
- Electronics: DAE3 Sn579 ; Calibrated: 2008/3/13
- Phantom: SAM 12 ; Type: SAM V4.0 ; Serial: TP 1202
- Measurement SW: DASY4, V4.7 Build 53 ; Postprocessing SW: SEMCAD, V1.8 Build 172

Mid Channel 6/Area Scan (5x7x1): Measurement grid: dx=15mm, dy=15mm
Maximum value of SAR (measured) = 0.294 mW/g

Mid Channel 6/Zoom Scan (7x7x7) (7x7x7)/Cube 0: Measurement grid: dx=5mm, dy=5mm, dz=5mm
Reference Value = 7.46 V/m
Peak SAR (extrapolated) = 0.399 W/kg
SAR(1 g) = 0.241 mW/g; SAR(10 g) = 0.139 mW/g
Maximum value of SAR (measured) = 0.290 mW/g

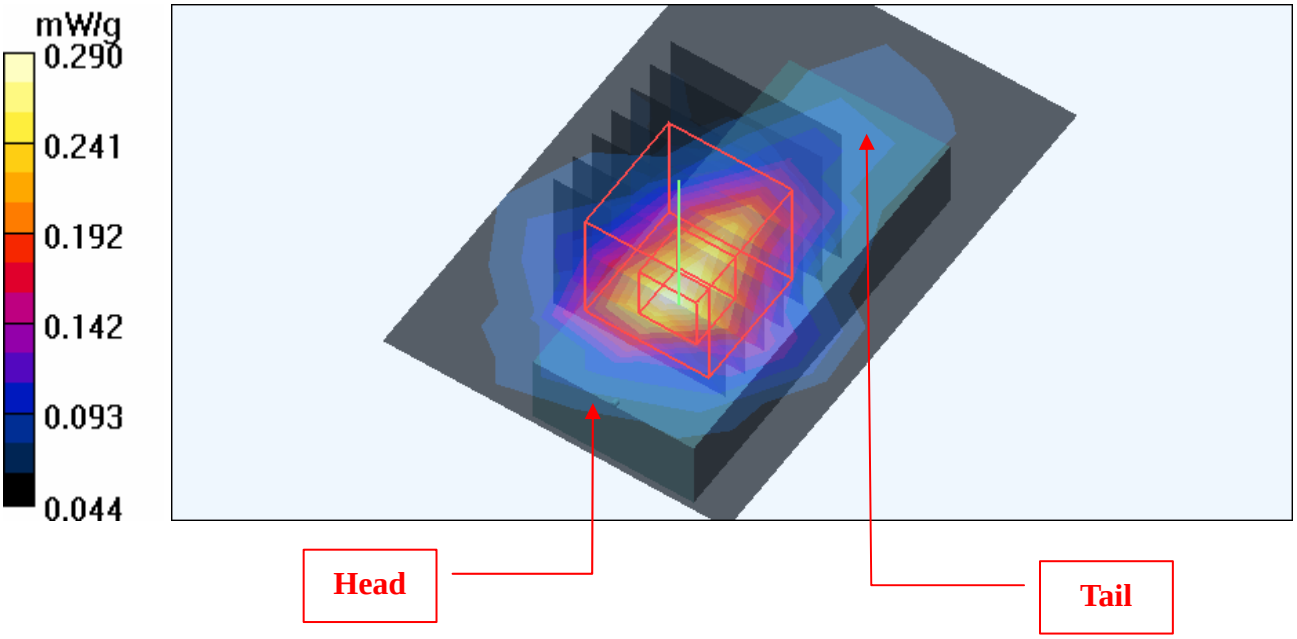

Date/Time: 2009/1/20 16:58:21

Test Laboratory: Bureau Veritas ADT

M04-11n 40M-Ch4

DUT: 802.11a/b/g/n dual band WLAN USB Dongle ; Type: WLAN-1501

Communication System: 802.11n 40MHz ; Frequency: 2437 MHz ; Duty Cycle: 1:1 ; Modulation type: BPSK
Medium: MSL2450 Medium parameters used: f = 2437 MHz; σ = 1.97 mho/m; ε_r = 54.3; ρ = 1000 kg/m^3
Phantom section: Flat Section ; Separation distance : 5 mm (The bottom side of the EUT to the Phantom)

DASY4 Configuration:
- Probe: EX3DV3 - SN3506 ; ConvF(7.52, 7.52, 7.52) ; Calibrated: 2008/9/30
- Sensor-Surface: 3mm (Mechanical Surface Detection)
- Electronics: DAE3 Sn579 ; Calibrated: 2008/3/13
- Phantom: SAM 12 ; Type: SAM V4.0 ; Serial: TP 1202
- Measurement SW: DASY4, V4.7 Build 53 ; Postprocessing SW: SEMCAD, V1.8 Build 172

Mid Channel 4/Area Scan (5x7x1): Measurement grid: dx=15mm, dy=15mm
Maximum value of SAR (measured) = 0.301 mW/g

Mid Channel 4/Zoom Scan (7x7x7) (7x7x7)/Cube 0: Measurement grid: dx=5mm, dy=5mm, dz=5mm
Reference Value = 7.66 V/m
Peak SAR (extrapolated) = 0.409 W/kg
SAR(1 g) = 0.257 mW/g; SAR(10 g) = 0.148 mW/g
Maximum value of SAR (measured) = 0.313 mW/g

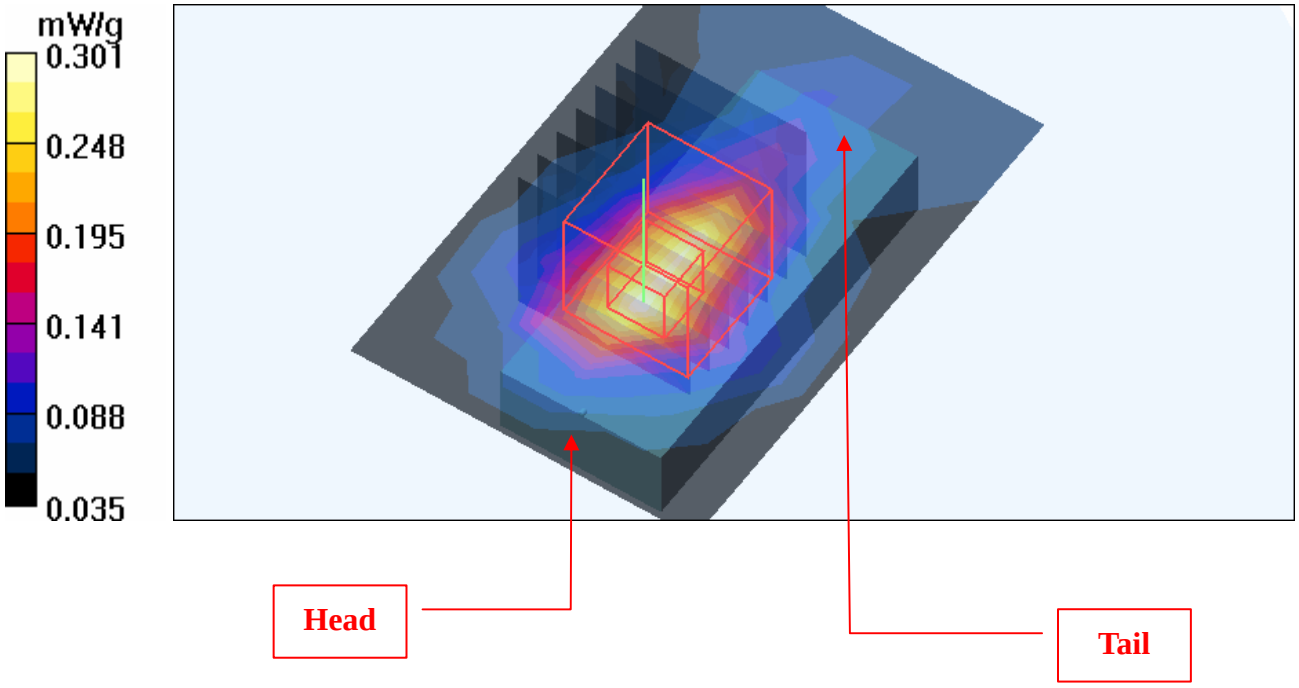

Date/Time: 2009/1/20 17:19:02

Test Laboratory: Bureau Veritas ADT

M05-11b-Ch6

DUT: 802.11a/b/g/n dual band WLAN USB Dongle ; Type: WLAN-1501

Communication System: 802.11b ; Frequency: 2437 MHz ; Duty Cycle: 1:1 ; Modulation type: DBPSK
Medium: MSL2450 Medium parameters used: f = 2437 MHz; σ = 1.97 mho/m; ε_r = 54.3; ρ = 1000 kg/m^3
Phantom section: Flat Section ; Separation distance : 5 mm (The edge side of the EUT to the Phantom)

DASY4 Configuration:
- Probe: EX3DV3 - SN3506 ; ConvF(7.52, 7.52, 7.52) ; Calibrated: 2008/9/30
- Sensor-Surface: 3mm (Mechanical Surface Detection)
- Electronics: DAE3 Sn579 ; Calibrated: 2008/3/13
- Phantom: SAM 12 ; Type: SAM V4.0 ; Serial: TP 1202
- Measurement SW: DASY4, V4.7 Build 53 ; Postprocessing SW: SEMCAD, V1.8 Build 172

Mid Channel 6/Area Scan (5x7x1): Measurement grid: dx=15mm, dy=15mm
Maximum value of SAR (measured) = 0.205 mW/g

Mid Channel 6/Zoom Scan (7x7x7) (7x7x7)/Cube 0: Measurement grid: dx=5mm, dy=5mm, dz=5mm
Reference Value = 6.75 V/m
Peak SAR (extrapolated) = 0.288 W/kg
SAR(1 g) = 0.158 mW/g; SAR(10 g) = 0.097 mW/g
Maximum value of SAR (measured) = 0.198 mW/g

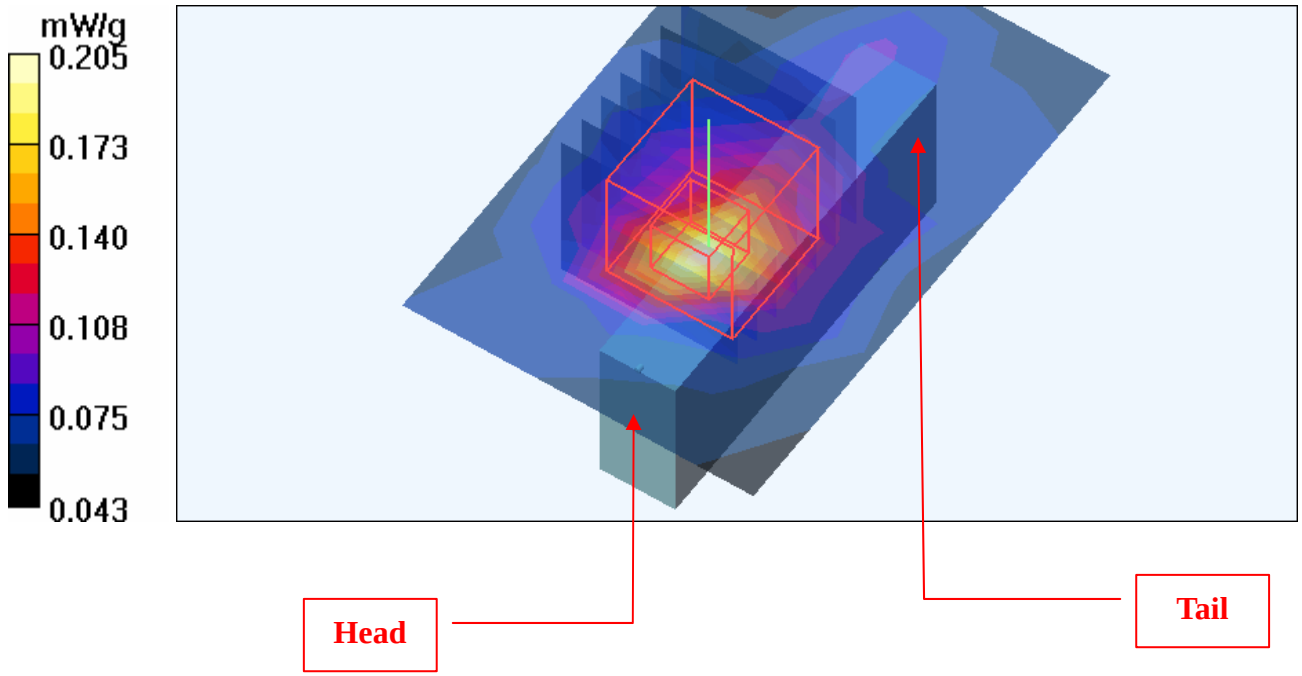

Date/Time: 2009/1/20 17:36:45

Test Laboratory: Bureau Veritas ADT

M06-11g-Ch6

DUT: 802.11a/b/g/n dual band WLAN USB Dongle ; Type: WLAN-1501

Communication System: 802.11g ; Frequency: 2437 MHz ; Duty Cycle: 1:1 ; Modulation type: BPSK
Medium: MSL2450 Medium parameters used: f = 2437 MHz; σ = 1.97 mho/m; ε_r = 54.3; ρ = 1000 kg/m^3
Phantom section: Flat Section ; Separation distance : 5 mm (The edge side of the EUT to the Phantom)

DASY4 Configuration:
- Probe: EX3DV3 - SN3506 ; ConvF(7.52, 7.52, 7.52) ; Calibrated: 2008/9/30
- Sensor-Surface: 3mm (Mechanical Surface Detection)
- Electronics: DAE3 Sn579 ; Calibrated: 2008/3/13
- Phantom: SAM 12 ; Type: SAM V4.0 ; Serial: TP 1202
- Measurement SW: DASY4, V4.7 Build 53 ; Postprocessing SW: SEMCAD, V1.8 Build 172

Mid Channel 6/Area Scan (5x7x1): Measurement grid: dx=15mm, dy=15mm
Maximum value of SAR (measured) = 0.107 mW/g

Mid Channel 6/Zoom Scan (7x7x7) (7x7x7)/Cube 0: Measurement grid: dx=5mm, dy=5mm, dz=5mm
Reference Value = 5.23 V/m
Peak SAR (extrapolated) = 0.168 W/kg
SAR(1 g) = 0.092 mW/g; SAR(10 g) = 0.066 mW/g

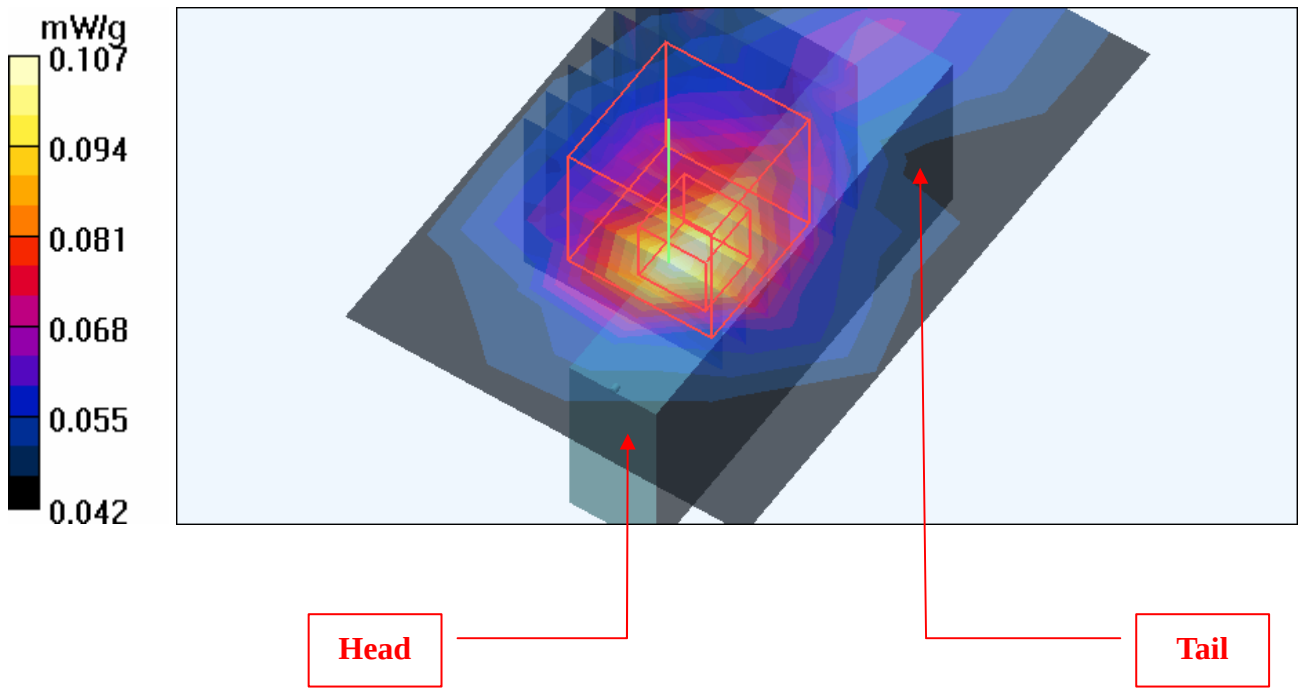

Date/Time: 2009/1/20 17:53:01

Test Laboratory: Bureau Veritas ADT

M07-11n 20M-Ch6

DUT: 802.11a/b/g/n dual band WLAN USB Dongle ; Type: WLAN-1501

Communication System: 2.4G 11n span20 ; Frequency: 2437 MHz ; Duty Cycle: 1:1 ; Modulation type: BPSK
Medium: MSL2450 Medium parameters used: f = 2437 MHz; σ = 1.97 mho/m; ε_r = 54.3; ρ = 1000 kg/m^3
Phantom section: Flat Section ; Separation distance : 5 mm (The edge side of the EUT to the Phantom)

DASY4 Configuration:
- Probe: EX3DV3 - SN3506 ; ConvF(7.52, 7.52, 7.52) ; Calibrated: 2008/9/30
- Sensor-Surface: 3mm (Mechanical Surface Detection)
- Electronics: DAE3 Sn579 ; Calibrated: 2008/3/13
- Phantom: SAM 12 ; Type: SAM V4.0 ; Serial: TP 1202
- Measurement SW: DASY4, V4.7 Build 53 ; Postprocessing SW: SEMCAD, V1.8 Build 172

Mid Channel 6/Area Scan (5x7x1): Measurement grid: dx=15mm, dy=15mm
Maximum value of SAR (measured) = 0.117 mW/g

Mid Channel 6/Zoom Scan (7x7x7) (7x7x7)/Cube 0: Measurement grid: dx=5mm, dy=5mm, dz=5mm
Reference Value = 5.24 V/m
Peak SAR (extrapolated) = 0.177 W/kg
SAR(1 g) = 0.098 mW/g; SAR(10 g) = 0.067 mW/g

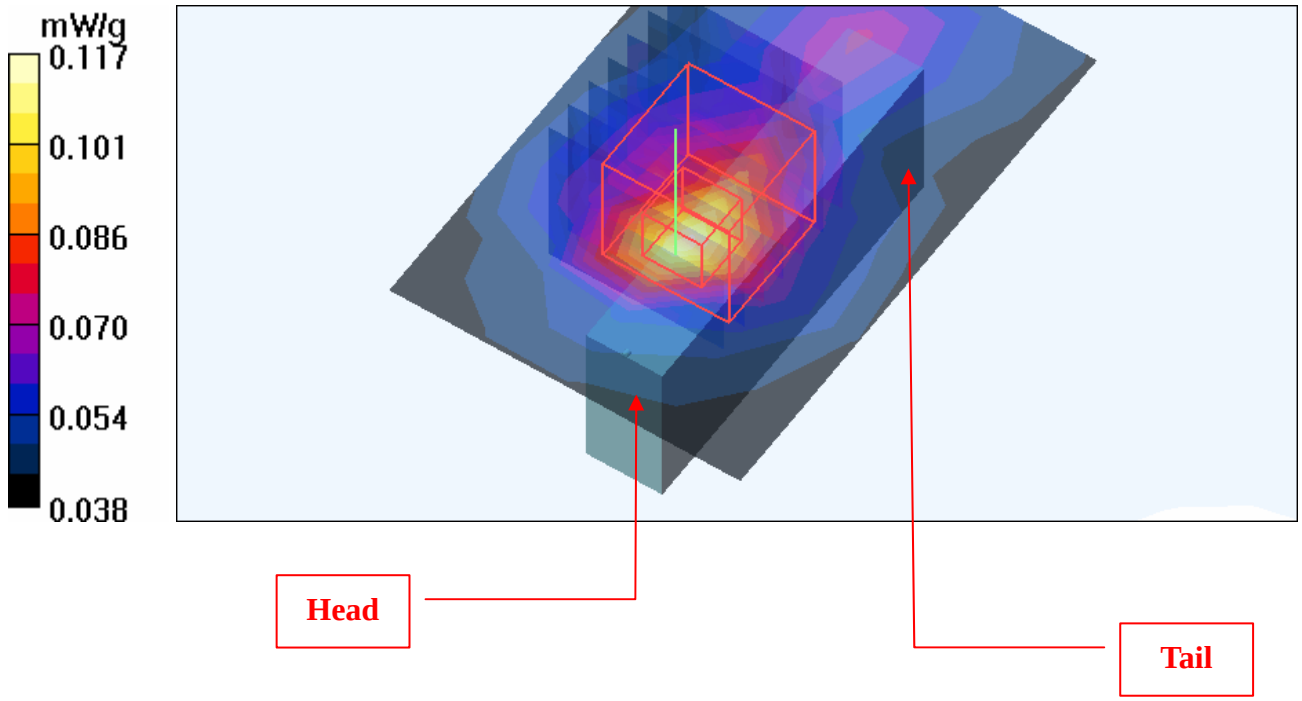

Date/Time: 2009/1/20 18:15:00

Test Laboratory: Bureau Veritas ADT

M08-11n 40M-Ch4

DUT: 802.11a/b/g/n dual band WLAN USB Dongle ; Type: WLAN-1501

Communication System: 802.11n 40MHz ; Frequency: 2437 MHz ; Duty Cycle: 1:1 ; Modulation type: BPSK
Medium: MSL2450 Medium parameters used: f = 2437 MHz; σ = 1.97 mho/m; ε_r = 54.3; ρ = 1000 kg/m^3
Phantom section: Flat Section ; Separation distance : 5 mm (The edge side of the EUT to the Phantom)

DASY4 Configuration:
- Probe: EX3DV3 - SN3506 ; ConvF(7.52, 7.52, 7.52) ; Calibrated: 2008/9/30
- Sensor-Surface: 3mm (Mechanical Surface Detection)
- Electronics: DAE3 Sn579 ; Calibrated: 2008/3/13
- Phantom: SAM 12 ; Type: SAM V4.0 ; Serial: TP 1202
- Measurement SW: DASY4, V4.7 Build 53 ; Postprocessing SW: SEMCAD, V1.8 Build 172

Mid Channel 4/Area Scan (5x7x1): Measurement grid: dx=15mm, dy=15mm
Maximum value of SAR (measured) = 0.111 mW/g

Mid Channel 4/Zoom Scan (7x7x7) (7x7x7)/Cube 0: Measurement grid: dx=5mm, dy=5mm, dz=5mm
Reference Value = 5.16 V/m
Peak SAR (extrapolated) = 0.165 W/kg
SAR(1 g) = 0.089 mW/g; SAR(10 g) = 0.059 mW/g
Maximum value of SAR (measured) = 0.103 mW/g

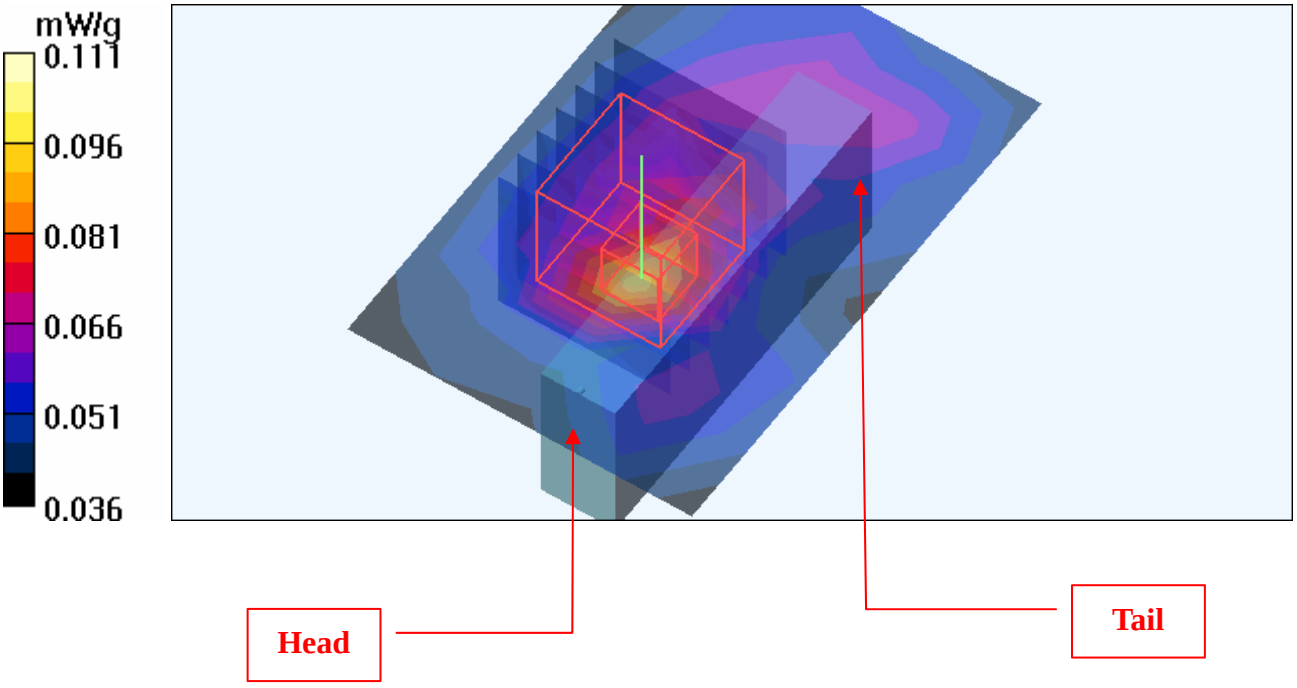

Date/Time: 2009/1/20 18:36:13

Test Laboratory: Bureau Veritas ADT

M09-11b-Ch6

DUT: 802.11a/b/g/n dual band WLAN USB Dongle ; Type: WLAN-1501

Communication System: 802.11b ; Frequency: 2437 MHz ; Duty Cycle: 1:1 ; Modulation type: DBPSK
Medium: MSL2450 Medium parameters used: f = 2437 MHz; σ = 1.97 mho/m; ε_r = 54.3; ρ = 1000 kg/m^3
Phantom section: Flat Section ; Separation distance : 5 mm (The front side of the EUT to the Phantom)

DASY4 Configuration:
- Probe: EX3DV3 - SN3506 ; ConvF(7.52, 7.52, 7.52) ; Calibrated: 2008/9/30
- Sensor-Surface: 3mm (Mechanical Surface Detection)
- Electronics: DAE3 Sn579 ; Calibrated: 2008/3/13
- Phantom: SAM 12 ; Type: SAM V4.0 ; Serial: TP 1202
- Measurement SW: DASY4, V4.7 Build 53 ; Postprocessing SW: SEMCAD, V1.8 Build 172

Mid Channel 6/Area Scan (5x7x1): Measurement grid: dx=15mm, dy=15mm
Maximum value of SAR (measured) = 0.367 mW/g

Mid Channel 6/Zoom Scan (7x7x7) (7x7x7)/Cube 0: Measurement grid: dx=5mm, dy=5mm, dz=5mm
Reference Value = 8.05 V/m
Peak SAR (extrapolated) = 0.486 W/kg
SAR(1 g) = 0.255 mW/g; SAR(10 g) = 0.124 mW/g
Maximum value of SAR (measured) = 0.323 mW/g

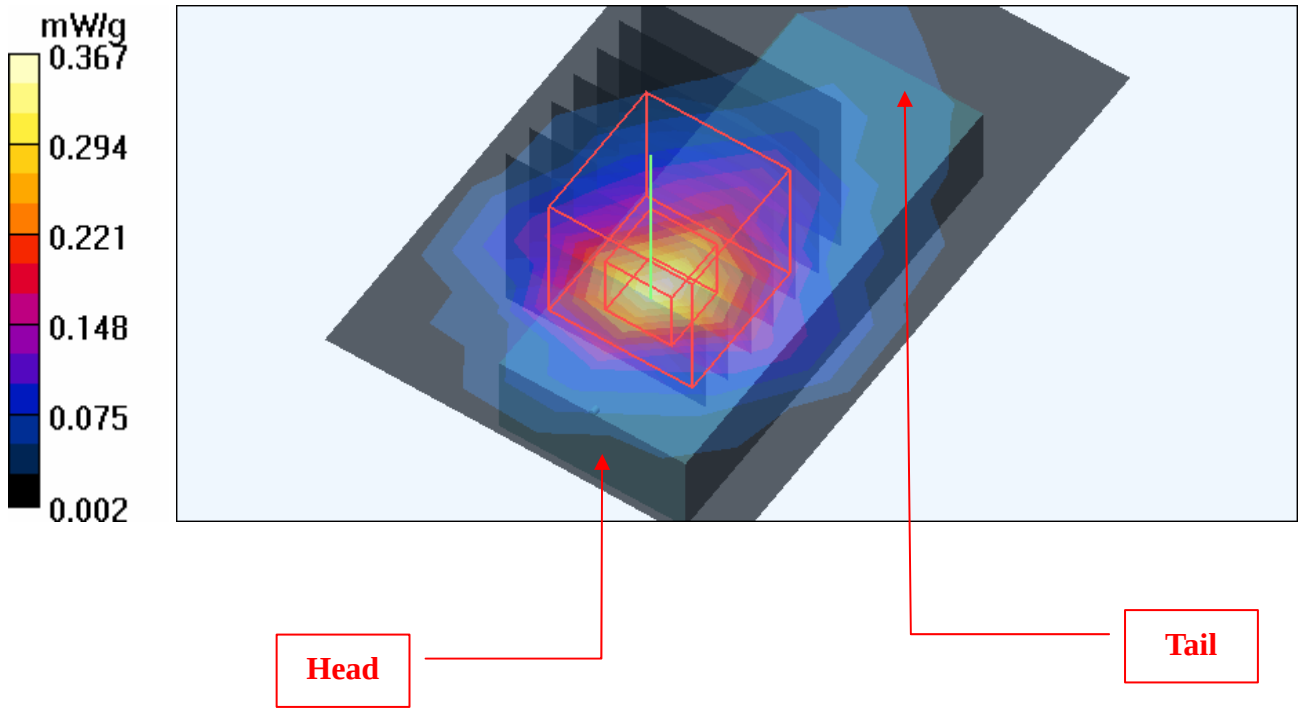

Date/Time: 2009/1/20 18:55:24

Test Laboratory: Bureau Veritas ADT

M10-11g-Ch6

DUT: 802.11a/b/g/n dual band WLAN USB Dongle ; Type: WLAN-1501

Communication System: 802.11g ; Frequency: 2437 MHz ; Duty Cycle: 1:1 ; Modulation type: BPSK
Medium: MSL2450 Medium parameters used: f = 2437 MHz; σ = 1.97 mho/m; ε_r = 54.3; ρ = 1000 kg/m^3
Phantom section: Flat Section ; Separation distance : 5 mm (The front side of the EUT to the Phantom)

DASY4 Configuration:
- Probe: EX3DV3 - SN3506 ; ConvF(7.52, 7.52, 7.52) ; Calibrated: 2008/9/30
- Sensor-Surface: 3mm (Mechanical Surface Detection)
- Electronics: DAE3 Sn579 ; Calibrated: 2008/3/13
- Phantom: SAM 12 ; Type: SAM V4.0 ; Serial: TP 1202
- Measurement SW: DASY4, V4.7 Build 53 ; Postprocessing SW: SEMCAD, V1.8 Build 172

Mid Channel 6/Area Scan (5x7x1): Measurement grid: dx=15mm, dy=15mm
Maximum value of SAR (measured) = 0.166 mW/g

Mid Channel 6/Zoom Scan (7x7x7) (7x7x7)/Cube 0: Measurement grid: dx=5mm, dy=5mm, dz=5mm
Reference Value = 5.69 V/m
Peak SAR (extrapolated) = 0.296 W/kg
SAR(1 g) = 0.107 mW/g; SAR(10 g) = 0.050 mW/g
Maximum value of SAR (measured) = 0.144 mW/g

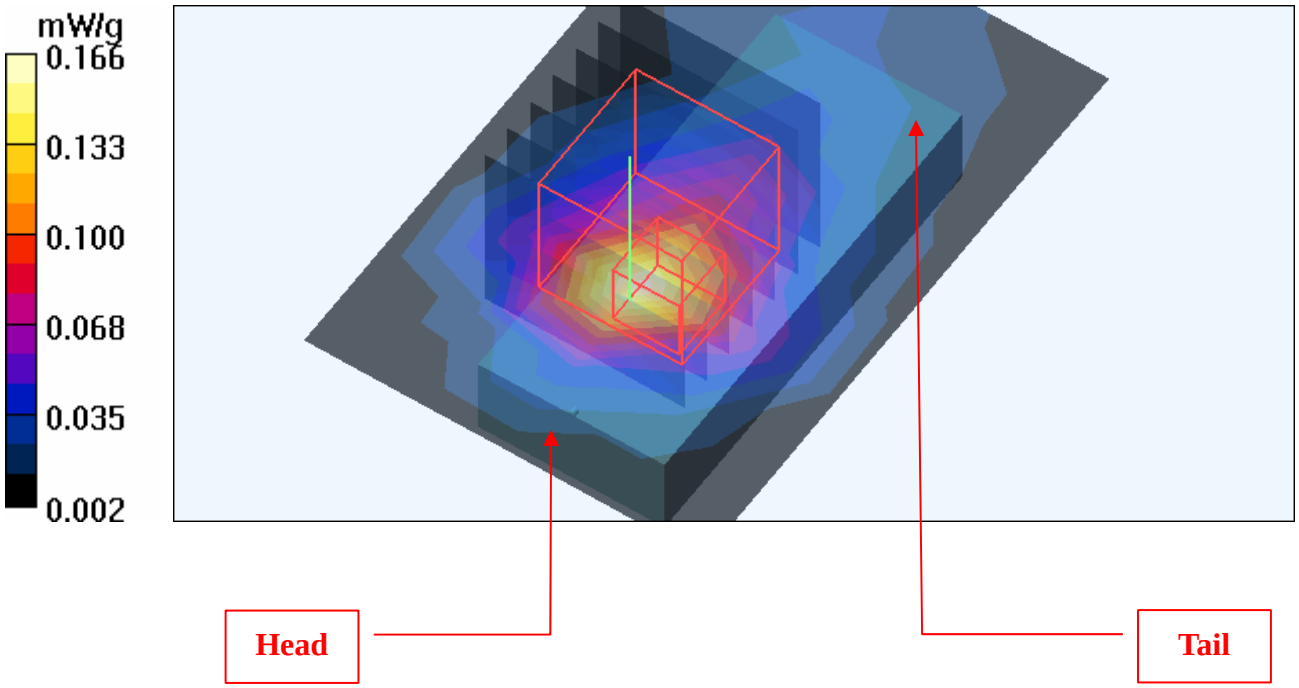

Date/Time: 2009/1/20 19:17:58

Test Laboratory: Bureau Veritas ADT

M11-11n 20M-Ch6

DUT: 802.11a/b/g/n dual band WLAN USB Dongle ; Type: WLAN-1501

Communication System: 2.4G 11n span20 ; Frequency: 2437 MHz ; Duty Cycle: 1:1 ; Modulation type: BPSK
Medium: MSL2450 Medium parameters used: f = 2437 MHz; σ = 1.97 mho/m; ε_r = 54.3; ρ = 1000 kg/m^3
Phantom section: Flat Section ; Separation distance : 5 mm (The front side of the EUT to the Phantom)

DASY4 Configuration:
- Probe: EX3DV3 - SN3506 ; ConvF(7.52, 7.52, 7.52) ; Calibrated: 2008/9/30
- Sensor-Surface: 3mm (Mechanical Surface Detection)
- Electronics: DAE3 Sn579 ; Calibrated: 2008/3/13
- Phantom: SAM 12 ; Type: SAM V4.0 ; Serial: TP 1202
- Measurement SW: DASY4, V4.7 Build 53 ; Postprocessing SW: SEMCAD, V1.8 Build 172

Mid Channel 6/Area Scan (5x7x1): Measurement grid: dx=15mm, dy=15mm
Maximum value of SAR (measured) = 0.141 mW/g

Mid Channel 6/Zoom Scan (7x7x7) (7x7x7)/Cube 0: Measurement grid: dx=5mm, dy=5mm, dz=5mm
Reference Value = 4.47 V/m
Peak SAR (extrapolated) = 0.199 W/kg
SAR(1 g) = 0.107 mW/g; SAR(10 g) = 0.053 mW/g
Maximum value of SAR (measured) = 0.133 mW/g

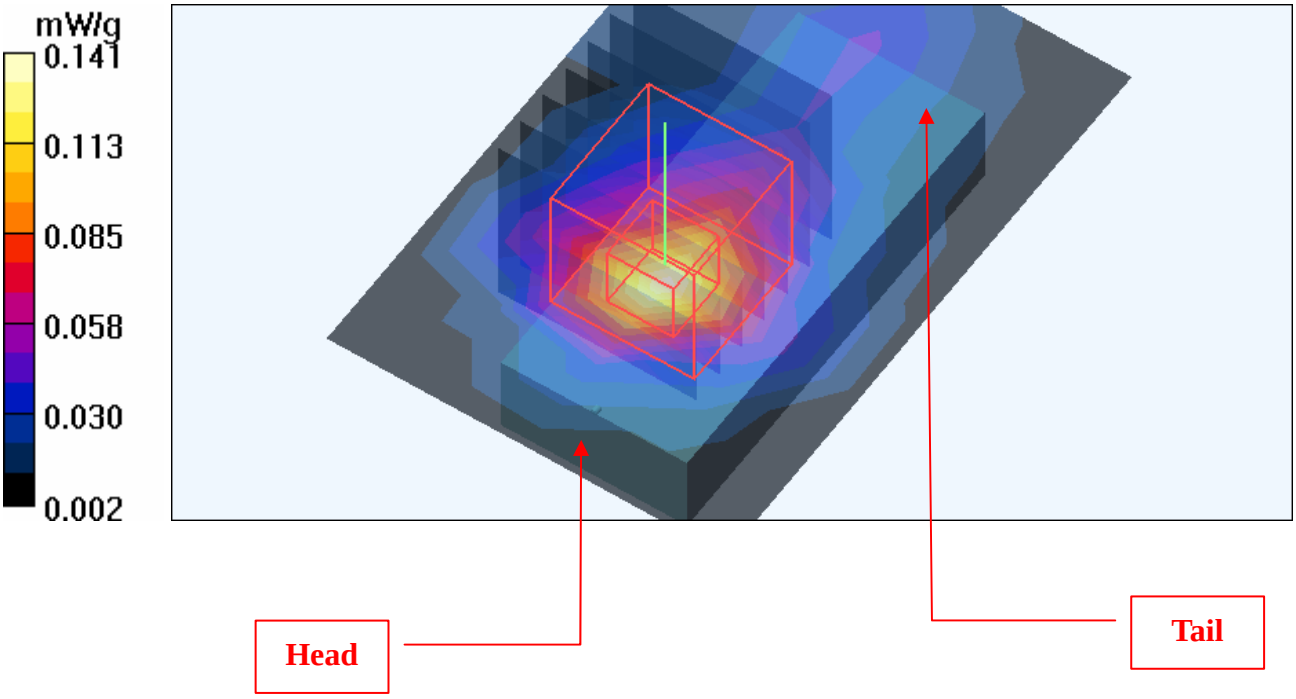

Date/Time: 2009/1/20 19:33:51

Test Laboratory: Bureau Veritas ADT

M12-11n 40M-Ch4

DUT: 802.11a/b/g/n dual band WLAN USB Dongle ; Type: WLAN-1501

Communication System: 802.11n 40MHz ; Frequency: 2437 MHz ; Duty Cycle: 1:1 ; Modulation type: BPSK
Medium: MSL2450 Medium parameters used: f = 2437 MHz; σ = 1.97 mho/m; ε_r = 54.3; ρ = 1000 kg/m^3
Phantom section: Flat Section ; Separation distance : 5 mm (The front side of the EUT to the Phantom)

DASY4 Configuration:
- Probe: EX3DV3 - SN3506 ; ConvF(7.52, 7.52, 7.52) ; Calibrated: 2008/9/30
- Sensor-Surface: 3mm (Mechanical Surface Detection)
- Electronics: DAE3 Sn579 ; Calibrated: 2008/3/13
- Phantom: SAM 12 ; Type: SAM V4.0 ; Serial: TP 1202
- Measurement SW: DASY4, V4.7 Build 53 ; Postprocessing SW: SEMCAD, V1.8 Build 172

Mid Channel 4/Area Scan (5x7x1): Measurement grid: dx=15mm, dy=15mm
Maximum value of SAR (measured) = 0.121 mW/g

Mid Channel 4/Zoom Scan (7x7x7) (7x7x7)/Cube 0: Measurement grid: dx=5mm, dy=5mm, dz=5mm
Reference Value = 4.14 V/m
Peak SAR (extrapolated) = 0.177 W/kg
SAR(1 g) = 0.096 mW/g; SAR(10 g) = 0.048 mW/g
Maximum value of SAR (measured) = 0.119 mW/g

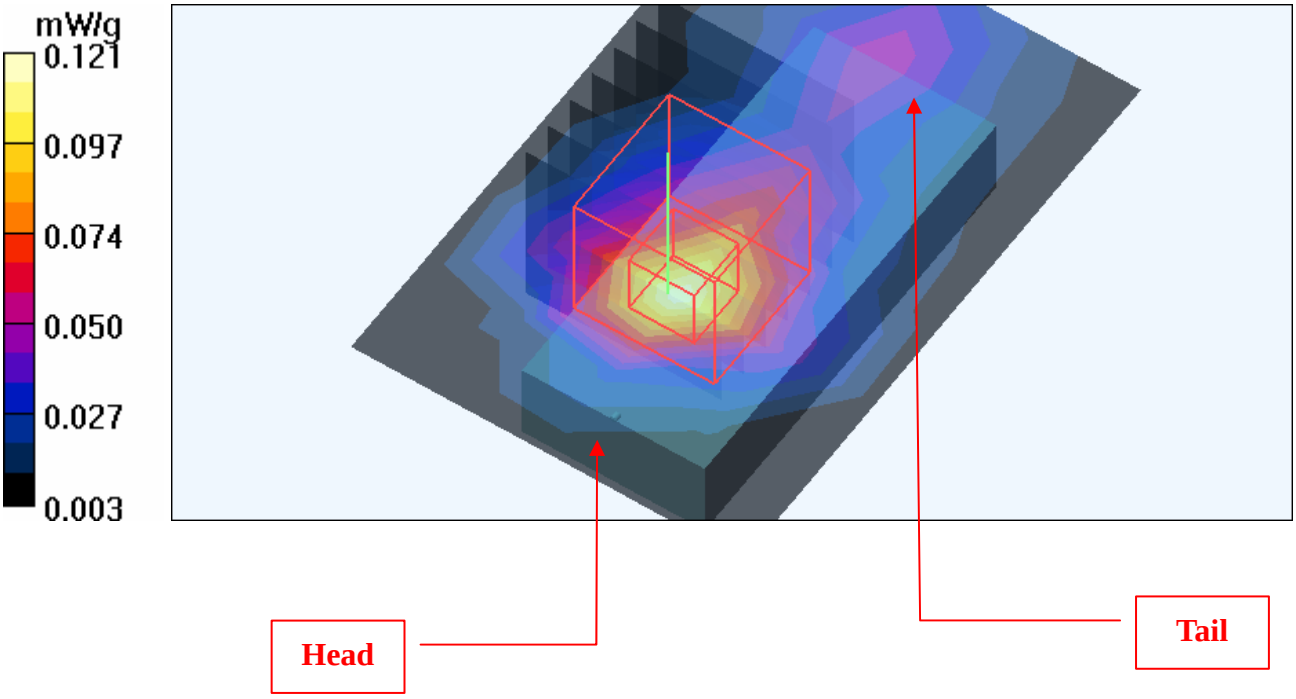

Date/Time: 2009/1/20 19:51:50

Test Laboratory: Bureau Veritas ADT

M13-11b-Ch6

DUT: 802.11a/b/g/n dual band WLAN USB Dongle ; Type: WLAN-1501

Communication System: 802.11b ; Frequency: 2437 MHz ; Duty Cycle: 1:1 ; Modulation type: DBPSK
Medium: MSL2450 Medium parameters used: f = 2437 MHz; σ = 1.97 mho/m; ε_r = 54.3; ρ = 1000 kg/m^3
Phantom section: Flat Section ; Separation distance : 5 mm (The edge side of the EUT to the Phantom)

DASY4 Configuration:
- Probe: EX3DV3 - SN3506 ; ConvF(7.52, 7.52, 7.52) ; Calibrated: 2008/9/30
- Sensor-Surface: 3mm (Mechanical Surface Detection)
- Electronics: DAE3 Sn579 ; Calibrated: 2008/3/13
- Phantom: SAM 12 ; Type: SAM V4.0 ; Serial: TP 1202
- Measurement SW: DASY4, V4.7 Build 53 ; Postprocessing SW: SEMCAD, V1.8 Build 172

Mid Channel 6/Area Scan (5x7x1): Measurement grid: dx=15mm, dy=15mm
Maximum value of SAR (measured) = 0.179 mW/g

Mid Channel 6/Zoom Scan (7x7x7) (7x7x7)/Cube 0: Measurement grid: dx=5mm, dy=5mm, dz=5mm
Reference Value = 4.55 V/m
Peak SAR (extrapolated) = 0.261 W/kg
SAR(1 g) = 0.131 mW/g; SAR(10 g) = 0.066 mW/g
Maximum value of SAR (measured) = 0.170 mW/g

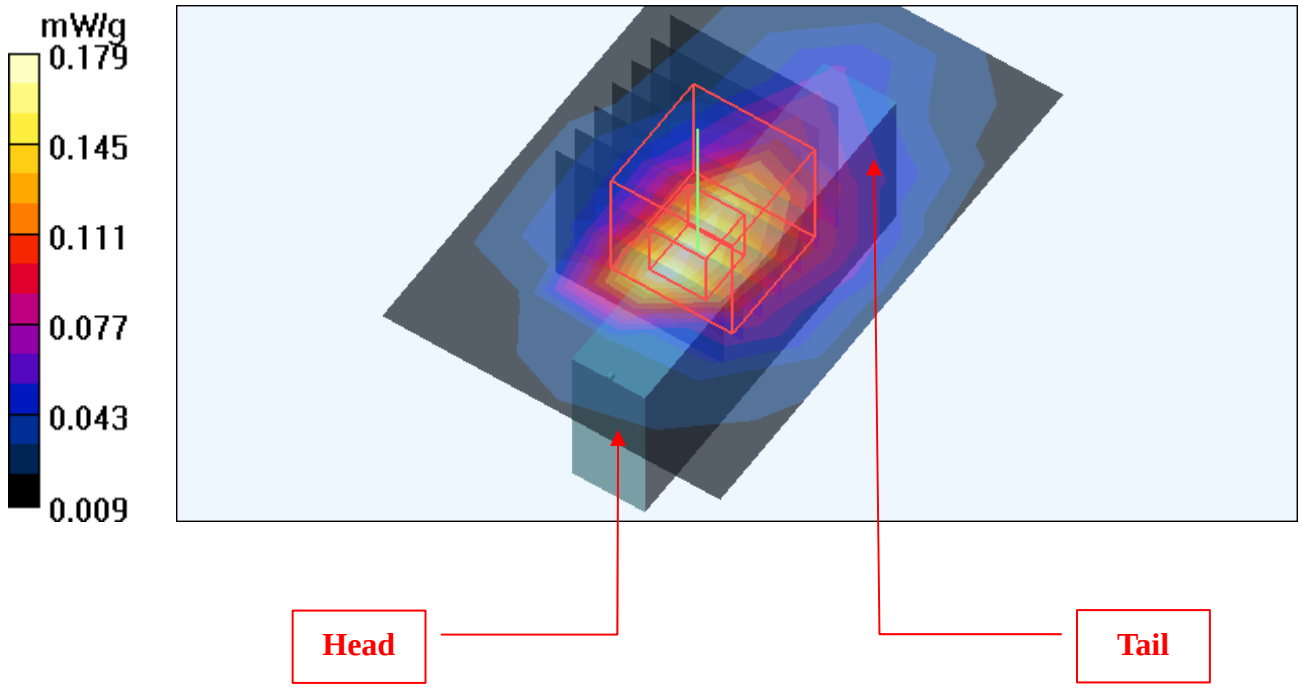

Date/Time: 2009/1/20 20:09:41

Test Laboratory: Bureau Veritas ADT

M14-11g-Ch6

DUT: 802.11a/b/g/n dual band WLAN USB Dongle ; Type: WLAN-1501

Communication System: 802.11g ; Frequency: 2437 MHz ; Duty Cycle: 1:1 ; Modulation type: BPSK
Medium: MSL2450 Medium parameters used: f = 2437 MHz; σ = 1.97 mho/m; ε_r = 54.3; ρ = 1000 kg/m^3
Phantom section: Flat Section ; Separation distance : 5 mm (The edge side of the EUT to the Phantom)

DASY4 Configuration:
- Probe: EX3DV3 - SN3506 ; ConvF(7.52, 7.52, 7.52) ; Calibrated: 2008/9/30
- Sensor-Surface: 3mm (Mechanical Surface Detection)
- Electronics: DAE3 Sn579 ; Calibrated: 2008/3/13
- Phantom: SAM 12 ; Type: SAM V4.0 ; Serial: TP 1202
- Measurement SW: DASY4, V4.7 Build 53 ; Postprocessing SW: SEMCAD, V1.8 Build 172

Mid Channel 6/Area Scan (5x7x1): Measurement grid: dx=15mm, dy=15mm
Maximum value of SAR (measured) = 0.087 mW/g

Mid Channel 6/Zoom Scan (7x7x7) (7x7x7)/Cube 0: Measurement grid: dx=5mm, dy=5mm, dz=5mm
Reference Value = 3.16 V/m
Peak SAR (extrapolated) = 0.124 W/kg
SAR(1 g) = 0.064 mW/g; SAR(10 g) = 0.034 mW/g
Maximum value of SAR (measured) = 0.080 mW/g

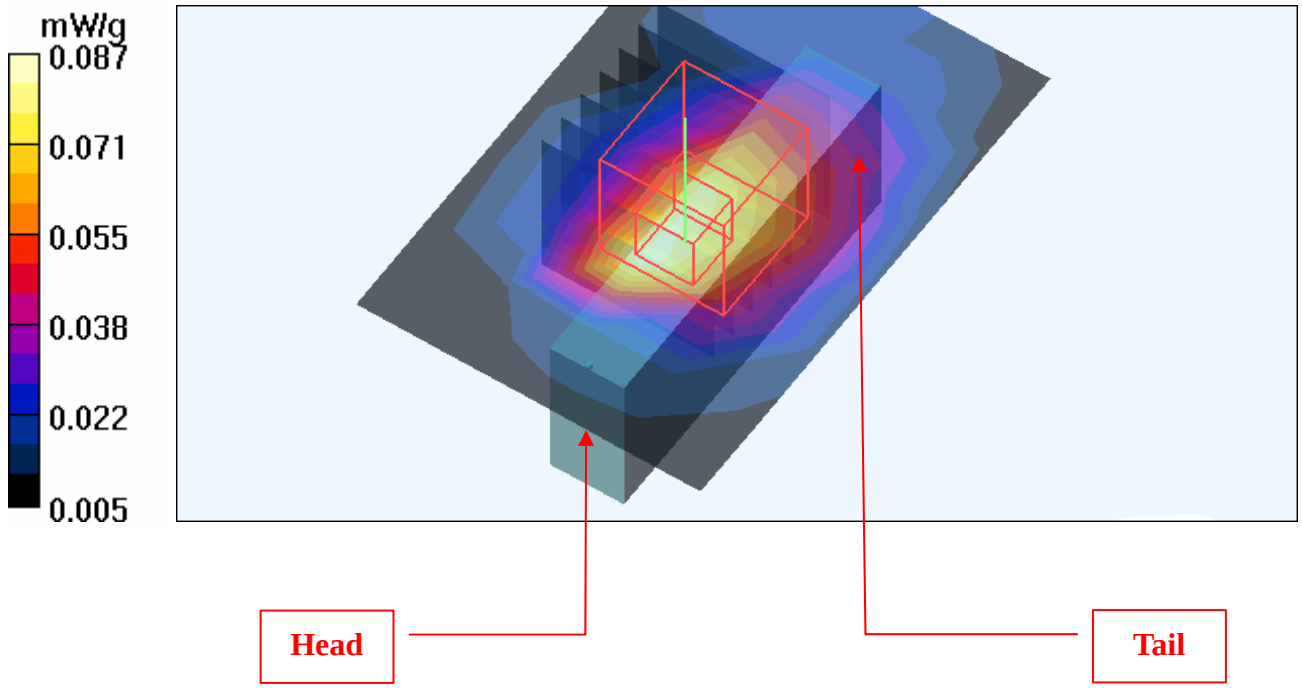

Date/Time: 2009/1/20 20:26:03

Test Laboratory: Bureau Veritas ADT

M15-11n 20M-Ch6

DUT: 802.11a/b/g/n dual band WLAN USB Dongle ; Type: WLAN-1501

Communication System: 2.4G 11n span20 ; Frequency: 2437 MHz ; Duty Cycle: 1:1 ; Modulation type: BPSK
Medium: MSL2450 Medium parameters used: f = 2437 MHz; σ = 1.97 mho/m; ε_r = 54.3; ρ = 1000 kg/m^3
Phantom section: Flat Section ; Separation distance : 5 mm (The edge side of the EUT to the Phantom)

DASY4 Configuration:
- Probe: EX3DV3 - SN3506 ; ConvF(7.52, 7.52, 7.52) ; Calibrated: 2008/9/30
- Sensor-Surface: 3mm (Mechanical Surface Detection)
- Electronics: DAE3 Sn579 ; Calibrated: 2008/3/13
- Phantom: SAM 12 ; Type: SAM V4.0 ; Serial: TP 1202
- Measurement SW: DASY4, V4.7 Build 53 ; Postprocessing SW: SEMCAD, V1.8 Build 172

Mid Channel 6/Area Scan (5x7x1): Measurement grid: dx=15mm, dy=15mm
Maximum value of SAR (measured) = 0.075 mW/g

Mid Channel 6/Zoom Scan (7x7x7) (7x7x7)/Cube 0: Measurement grid: dx=5mm, dy=5mm, dz=5mm
Reference Value = 2.91 V/m
Peak SAR (extrapolated) = 0.118 W/kg
SAR(1 g) = 0.061 mW/g; SAR(10 g) = 0.034 mW/g
Maximum value of SAR (measured) = 0.076 mW/g

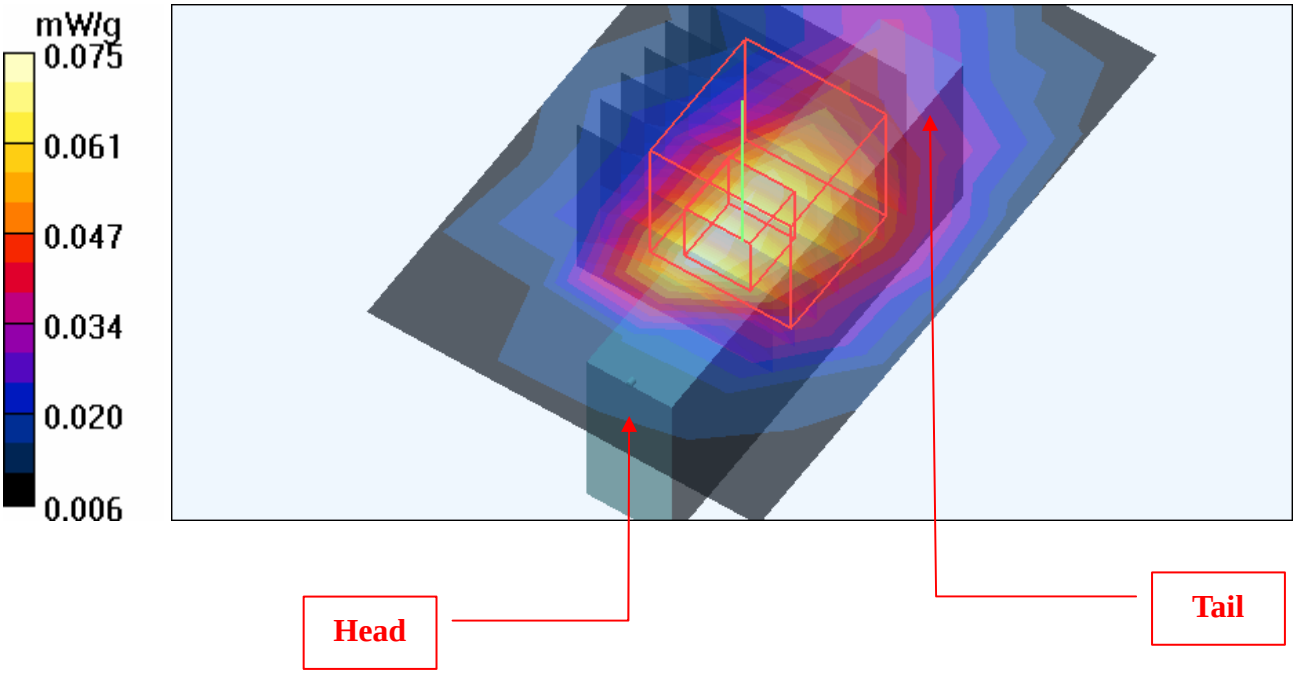

Date/Time: 2009/1/20 20:41:45

Test Laboratory: Bureau Veritas ADT

M16-11n 40M-Ch4

DUT: 802.11a/b/g/n dual band WLAN USB Dongle ; Type: WLAN-1501

Communication System: 802.11n 40MHz ; Frequency: 2437 MHz ; Duty Cycle: 1:1 ; Modulation type: BPSK
Medium: MSL2450 Medium parameters used: f = 2437 MHz; σ = 1.97 mho/m; ε_r = 54.3; ρ = 1000 kg/m^3
Phantom section: Flat Section ; Separation distance : 5 mm (The edge side of the EUT to the Phantom)

DASY4 Configuration:
- Probe: EX3DV3 - SN3506 ; ConvF(7.52, 7.52, 7.52) ; Calibrated: 2008/9/30
- Sensor-Surface: 3mm (Mechanical Surface Detection)
- Electronics: DAE3 Sn579 ; Calibrated: 2008/3/13
- Phantom: SAM 12 ; Type: SAM V4.0 ; Serial: TP 1202
- Measurement SW: DASY4, V4.7 Build 53 ; Postprocessing SW: SEMCAD, V1.8 Build 172

Mid Channel 4/Area Scan (5x7x1): Measurement grid: dx=15mm, dy=15mm
Maximum value of SAR (measured) = 0.071 mW/g

Mid Channel 4/Zoom Scan (7x7x7) (7x7x7)/Cube 0: Measurement grid: dx=5mm, dy=5mm, dz=5mm
Reference Value = 2.77 V/m
Peak SAR (extrapolated) = 0.116 W/kg
SAR(1 g) = 0.059 mW/g; SAR(10 g) = 0.033 mW/g
Maximum value of SAR (measured) = 0.072 mW/g

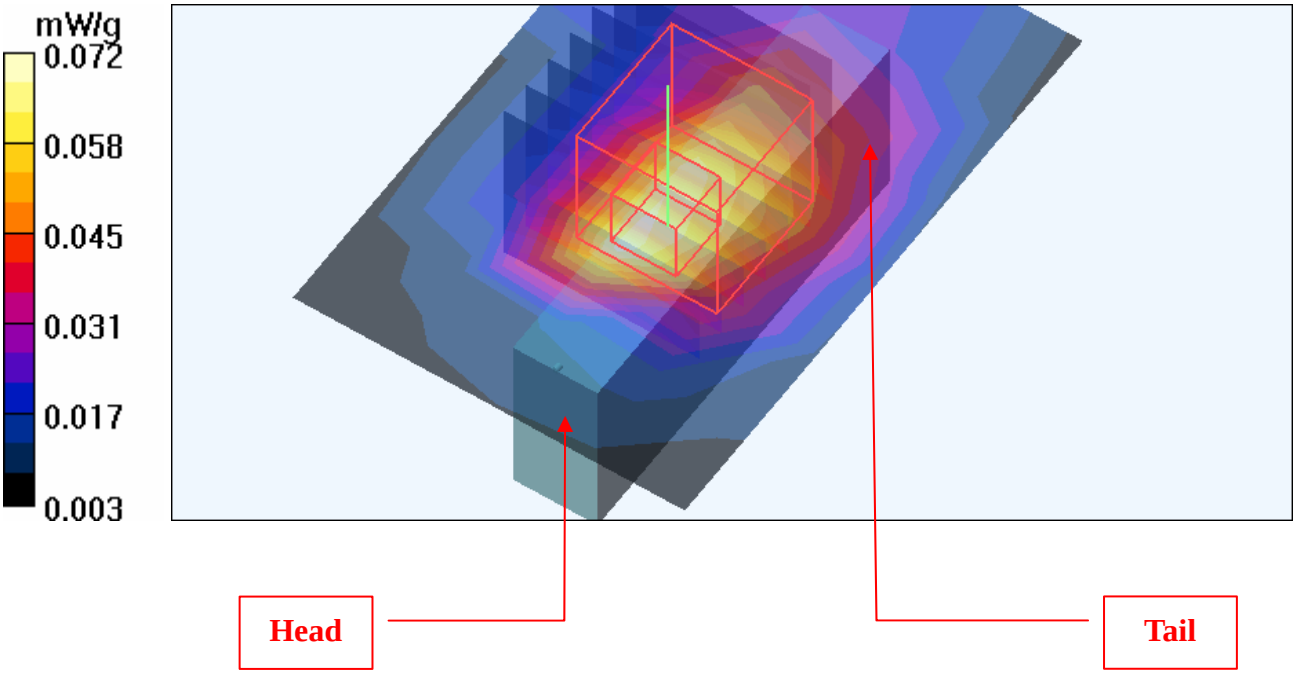

Date/Time: 2009/1/21 03:24:46

Test Laboratory: Bureau Veritas ADT

M17-11a-Ch165

DUT: 802.11a/b/g/n dual band WLAN USB Dongle ; Type: WLAN-1501

Communication System: 802.11a ; Frequency: 5825 MHz ; Duty Cycle: 1:1 ; Modulation type: BPSK
Medium: MSL5800 Medium parameters used: f = 5825 MHz; σ = 6.21 mho/m; ε_r = 49.5; ρ = 1000 kg/m^3
Phantom section: Flat Section ; Separation distance : 5 mm (The bottom side of the EUT to the Phantom)

DASY4 Configuration:
- Probe: EX3DV3 - SN3506 ; ConvF(3.87, 3.87, 3.87) ; Calibrated: 2008/9/30
- Sensor-Surface: 3mm (Mechanical Surface Detection)
- Electronics: DAE3 Sn579 ; Calibrated: 2008/3/13
- Phantom: SAM 12 ; Type: SAM V4.0 ; Serial: TP 1202
- Measurement SW: DASY4, V4.7 Build 53 ; Postprocessing SW: SEMCAD, V1.8 Build 172

High Channel 165/Area Scan (6x10x1): Measurement grid: dx=10mm, dy=10mm
Maximum value of SAR (measured) = 0.626 mW/g

High Channel 165/Zoom Scan (8x8x8)/Cube 0: Measurement grid: dx=4.3mm, dy=4.3mm, dz=3mm
Reference Value = 8.65 V/m
Peak SAR (extrapolated) = 1.43 W/kg
SAR(1 g) = 0.568 mW/g; SAR(10 g) = 0.385 mW/g
Maximum value of SAR (measured) = 1.07 mW/g

High Channel 165/Zoom Scan (8x8x8)/Cube 1: Measurement grid: dx=4.3mm, dy=4.3mm, dz=3mm
Reference Value = 8.65 V/m
Peak SAR (extrapolated) = 1.27 W/kg
SAR(1 g) = 0.485 mW/g; SAR(10 g) = 0.366 mW/g
Maximum value of SAR (measured) = 0.703 mW/g

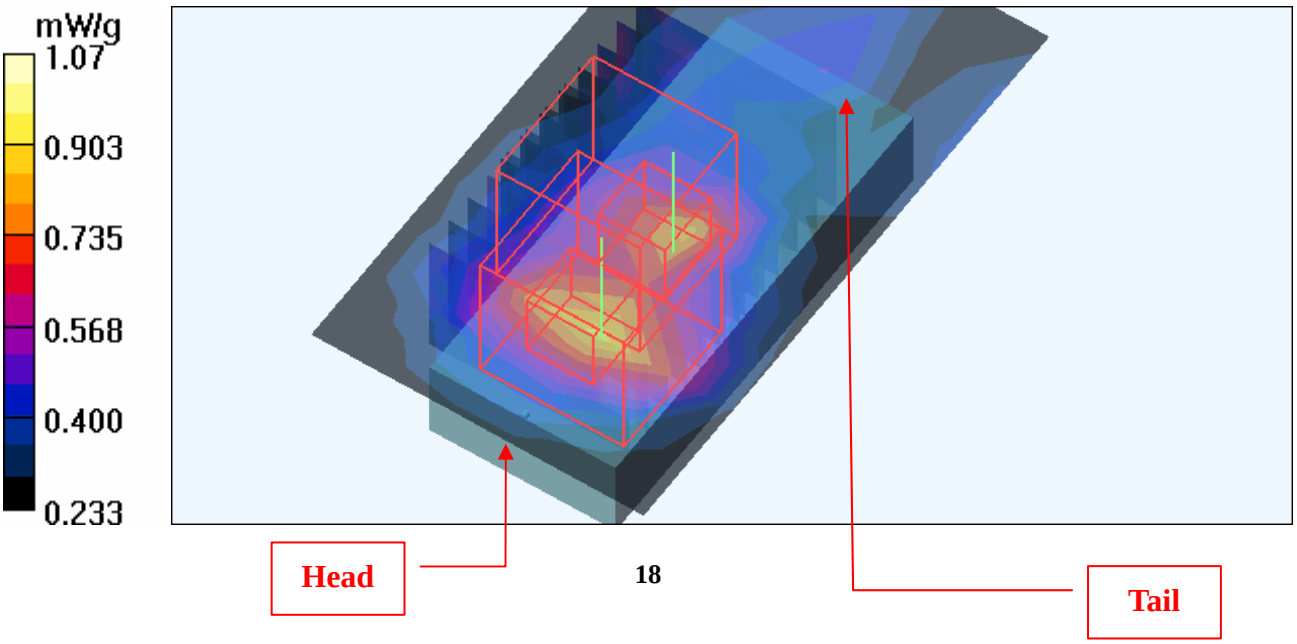

Date/Time: 2009/1/21 04:49:56

Test Laboratory: Bureau Veritas ADT

M18-11aN 20M-Ch165

DUT: 802.11a/b/g/n dual band WLAN USB Dongle ; Type: WLAN-1501

Communication System: 11n 5G span20 ; Frequency: 5825 MHz ; Duty Cycle: 1:1 ; Modulation type: BPSK

Medium: MSL5800 Medium parameters used: f = 5825 MHz; σ = 6.21 mho/m; ε_r = 49.5; ρ = 1000 kg/m^3

Phantom section: Flat Section ; Separation distance : 5 mm (The bottom side of the EUT to the Phantom)

DASY4 Configuration:
- Probe: EX3DV3 - SN3506 ; ConvF(3.87, 3.87, 3.87) ; Calibrated: 2008/9/30
- Sensor-Surface: 3mm (Mechanical Surface Detection)
- Electronics: DAE3 Sn579 ; Calibrated: 2008/3/13
- Phantom: SAM 12 ; Type: SAM V4.0 ; Serial: TP 1202
- Measurement SW: DASY4, V4.7 Build 53 ; Postprocessing SW: SEMCAD, V1.8 Build 172

High Channel 165/Area Scan (6x10x1): Measurement grid: dx=10mm, dy=10mm
Maximum value of SAR (measured) = 0.617 mW/g

High Channel 165/Zoom Scan (8x8x8)/Cube 0: Measurement grid: dx=4.3mm, dy=4.3mm, dz=3mm
Reference Value = 9.01 V/m
Peak SAR (extrapolated) = 1.66 W/kg
SAR(1 g) = 0.560 mW/g; SAR(10 g) = 0.374 mW/g
Maximum value of SAR (measured) = 0.679 mW/g

High Channel 165/Zoom Scan (8x8x8)/Cube 1: Measurement grid: dx=4.3mm, dy=4.3mm, dz=3mm
Reference Value = 9.01 V/m
Peak SAR (extrapolated) = 1.54 W/kg
SAR(1 g) = 0.492 mW/g; SAR(10 g) = 0.370 mW/g
Maximum value of SAR (measured) = 0.668 mW/g

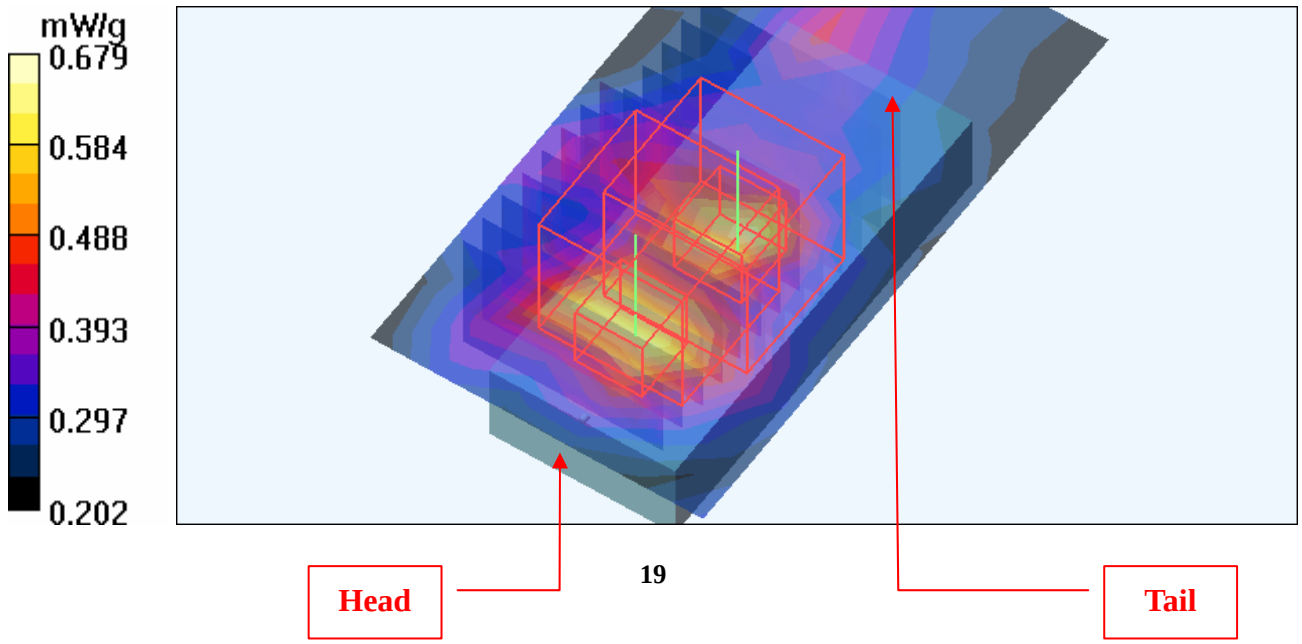

Date/Time: 2009/1/21 06:19:21

Test Laboratory: Bureau Veritas ADT

M19-11aN 40M-Ch159

DUT: 802.11a/b/g/n dual band WLAN USB Dongle ; Type: WLAN-1501

Communication System: 11n 5G span40 ; Frequency: 5795 MHz ; Duty Cycle: 1:1 ; Modulation type: BPSK

Medium: MSL5800 Medium parameters used: f = 5795 MHz; σ = 6.16 mho/m; ε_r = 49.6; ρ = 1000 kg/m^3

Phantom section: Flat Section ; Separation distance : 5 mm (The bottom side of the EUT to the Phantom)

DASY4 Configuration:
- Probe: EX3DV3 - SN3506 ; ConvF(3.87, 3.87, 3.87) ; Calibrated: 2008/9/30
- Sensor-Surface: 3mm (Mechanical Surface Detection)
- Electronics: DAE3 Sn579 ; Calibrated: 2008/3/13
- Phantom: SAM 12 ; Type: SAM V4.0 ; Serial: TP 1202
- Measurement SW: DASY4, V4.7 Build 53 ; Postprocessing SW: SEMCAD, V1.8 Build 172

High Channel 159/Area Scan (6x10x1): Measurement grid: dx=10mm, dy=10mm

Maximum value of SAR (measured) = 0.864 mW/g

High Channel 159/Zoom Scan (8x8x8)/Cube 0: Measurement grid: dx=4.3mm, dy=4.3mm, dz=3mm

Reference Value = 9.50 V/m

Peak SAR (extrapolated) = 1.42 W/kg

SAR(1 g) = 0.669 mW/g; SAR(10 g) = 0.422 mW/g

Maximum value of SAR (measured) = 0.835 mW/g

High Channel 159/Zoom Scan (8x8x8)/Cube 1: Measurement grid: dx=4.3mm, dy=4.3mm, dz=3mm

Reference Value = 9.50 V/m

Peak SAR (extrapolated) = 1.39 W/kg

SAR(1 g) = 0.559 mW/g; SAR(10 g) = 0.397 mW/g

Maximum value of SAR (measured) = 0.710 mW/g

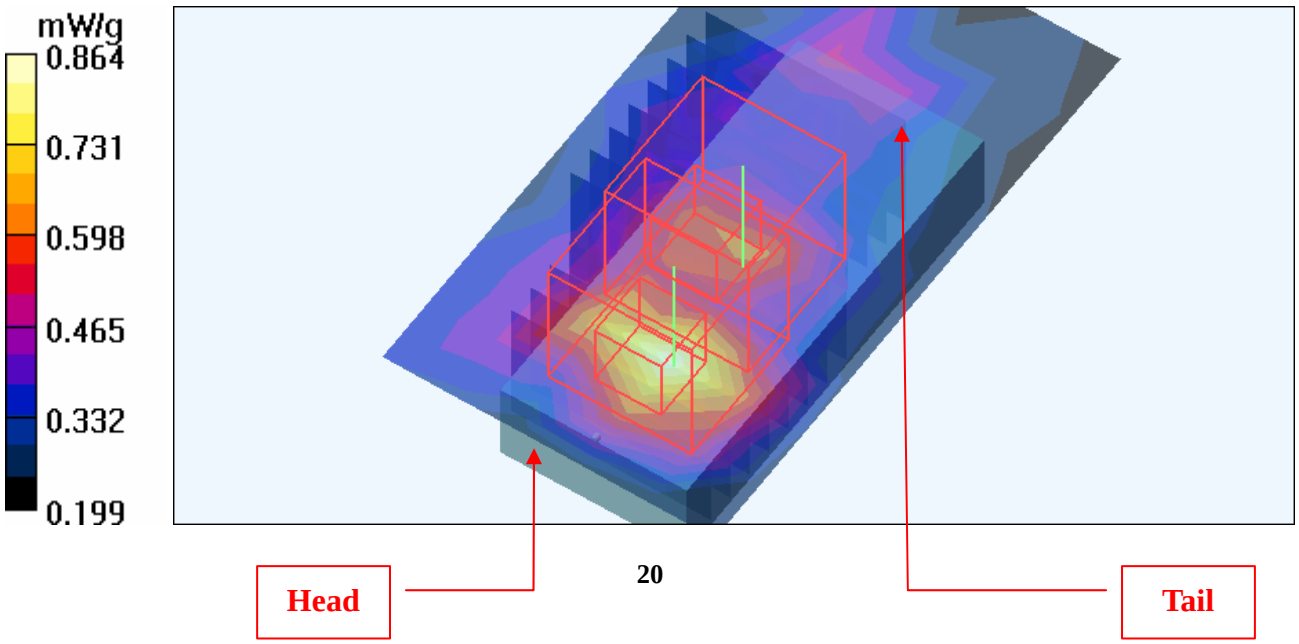

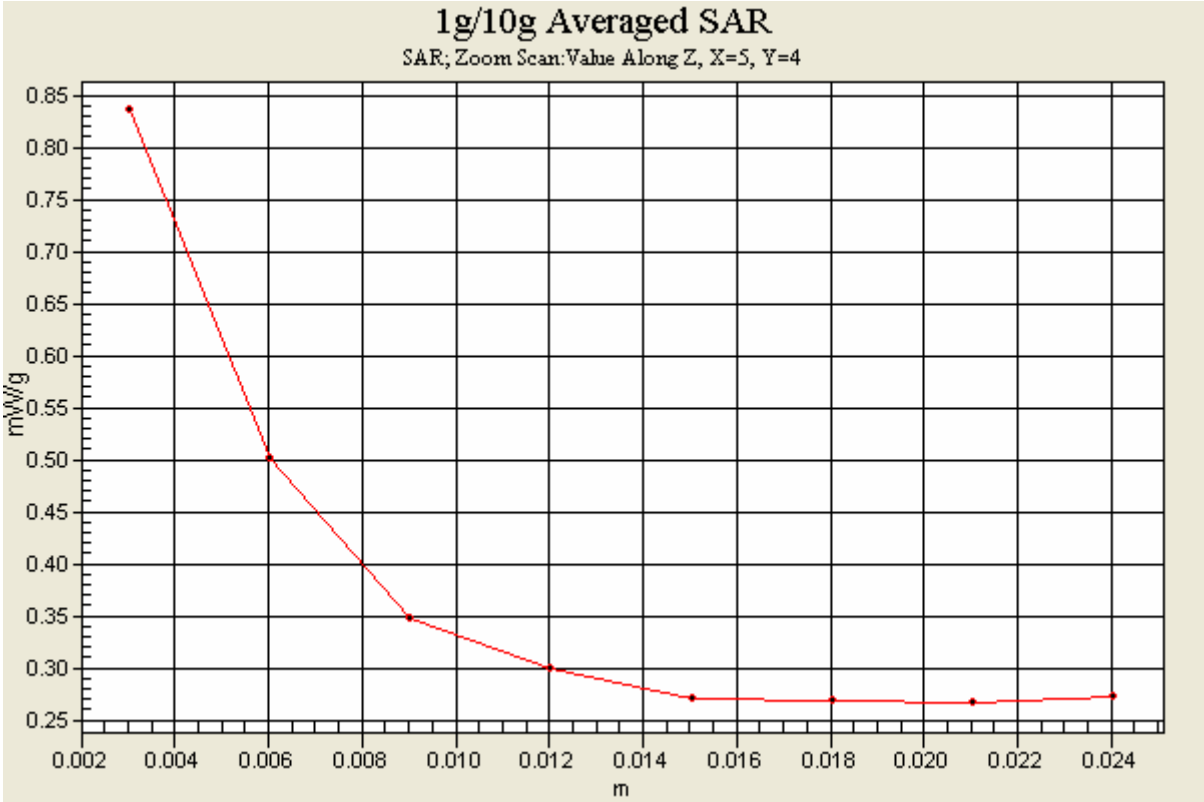
1g/10g Averaged SAR
SAR; Zoom Scan:Value Along Z, X=5, Y=4
mW/g
0.85
0.80
0.75
0.70
0.65
0.60
0.55
0.50
0.45
0.40
0.35
0.30
0.25
0.002
0.004
0.006
0.008
0.010
0.012
0.014
0.016
0.018
0.020
0.022
0.024
m

Date/Time: 2009/1/21 07:45:08

Test Laboratory: Bureau Veritas ADT

M20-11a-Ch165

DUT: 802.11a/b/g/n dual band WLAN USB Dongle ; Type: WLAN-1501

Communication System: 802.11a ; Frequency: 5825 MHz ; Duty Cycle: 1:1 ; Modulation type: BPSK
Medium: MSL5800 Medium parameters used: f = 5825 MHz; σ = 6.21 mho/m; ε_r = 49.5; ρ = 1000 kg/m^3
Phantom section: Flat Section ; Separation distance : 5 mm (The edge side of the EUT to the Phantom)

DASY4 Configuration:
- Probe: EX3DV3 - SN3506 ; ConvF(3.87, 3.87, 3.87) ; Calibrated: 2008/9/30
- Sensor-Surface: 3mm (Mechanical Surface Detection)
- Electronics: DAE3 Sn579 ; Calibrated: 2008/3/13
- Phantom: SAM 12 ; Type: SAM V4.0 ; Serial: TP 1202
- Measurement SW: DASY4, V4.7 Build 53 ; Postprocessing SW: SEMCAD, V1.8 Build 172

High Channel 165/Area Scan (6x10x1): Measurement grid: dx=10mm, dy=10mm
Maximum value of SAR (measured) = 0.495 mW/g

High Channel 165/Zoom Scan (8x8x8)/Cube 0: Measurement grid: dx=4.3mm, dy=4.3mm, dz=3mm
Reference Value = 7.38 V/m
Peak SAR (extrapolated) = 0.913 W/kg
SAR(1 g) = 0.503 mW/g; SAR(10 g) = 0.391 mW/g
Maximum value of SAR (measured) = 0.646 mW/g

High Channel 165/Zoom Scan (8x8x8)/Cube 1: Measurement grid: dx=4.3mm, dy=4.3mm, dz=3mm
Reference Value = 7.38 V/m
Peak SAR (extrapolated) = 1.07 W/kg
SAR(1 g) = 0.509 mW/g; SAR(10 g) = 0.402 mW/g
Maximum value of SAR (measured) = 0.709 mW/g

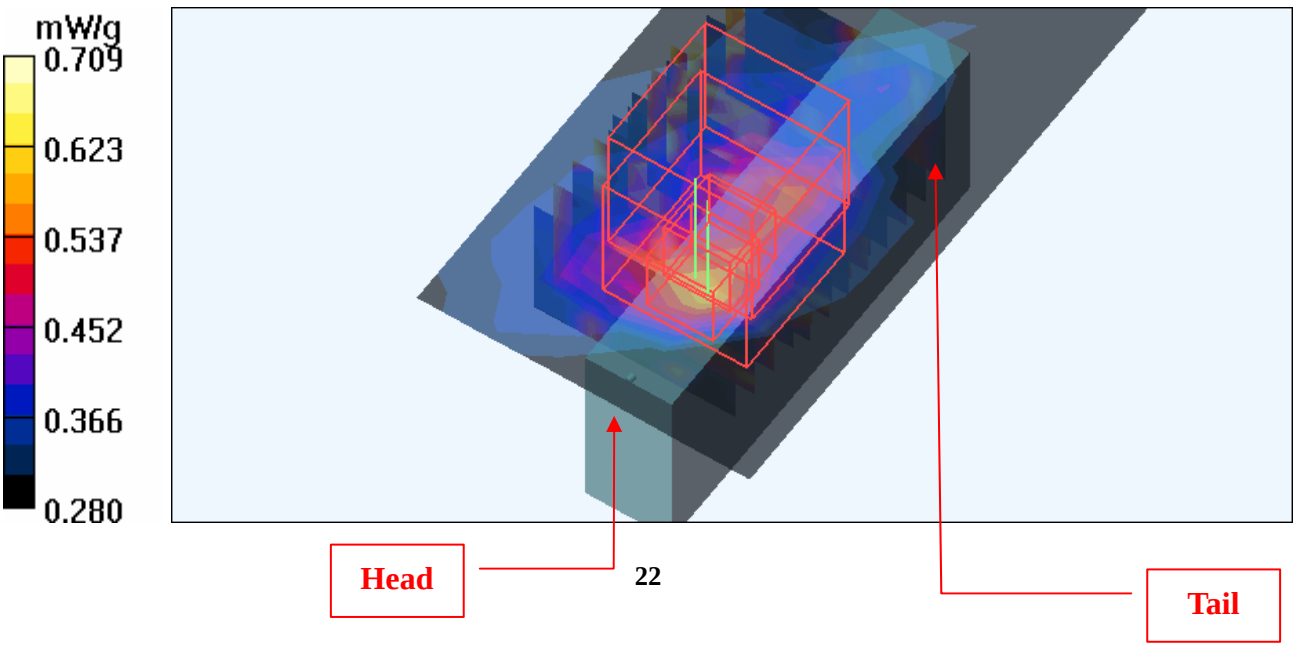

Date/Time: 2009/1/21 09:20:22

Test Laboratory: Bureau Veritas ADT

M21-11aN 20M-Ch165

DUT: 802.11a/b/g/n dual band WLAN USB Dongle ; Type: WLAN-1501

Communication System: 11n 5G span20 ; Frequency: 5825 MHz ; Duty Cycle: 1:1 ; Modulation type: BPSK

Medium: MSL5800 Medium parameters used: f = 5825 MHz; σ = 6.21 mho/m; ε_r = 49.5; ρ = 1000 kg/m^3

Phantom section: Flat Section ; Separation distance : 5 mm (The edge side of the EUT to the Phantom)

DASY4 Configuration:
- Probe: EX3DV3 - SN3506 ; ConvF(3.87, 3.87, 3.87) ; Calibrated: 2008/9/30
- Sensor-Surface: 3mm (Mechanical Surface Detection)
- Electronics: DAE3 Sn579 ; Calibrated: 2008/3/13
- Phantom: SAM 12 ; Type: SAM V4.0 ; Serial: TP 1202
- Measurement SW: DASY4, V4.7 Build 53 ; Postprocessing SW: SEMCAD, V1.8 Build 172

High Channel 165/Area Scan (6x10x1): Measurement grid: dx=10mm, dy=10mm
Maximum value of SAR (measured) = 0.467 mW/g

High Channel 165/Zoom Scan (8x8x8)/Cube 0: Measurement grid: dx=4.3mm, dy=4.3mm, dz=3mm
Reference Value = 7.33 V/m
Peak SAR (extrapolated) = 0.792 W/kg
SAR(1 g) = 0.441 mW/g; SAR(10 g) = 0.324 mW/g
Maximum value of SAR (measured) = 0.605 mW/g

High Channel 165/Zoom Scan (8x8x8)/Cube 1: Measurement grid: dx=4.3mm, dy=4.3mm, dz=3mm
Reference Value = 7.33 V/m
Peak SAR (extrapolated) = 0.822 W/kg
SAR(1 g) = 0.461 mW/g; SAR(10 g) = 0.364 mW/g
Maximum value of SAR (measured) = 0.625 mW/g

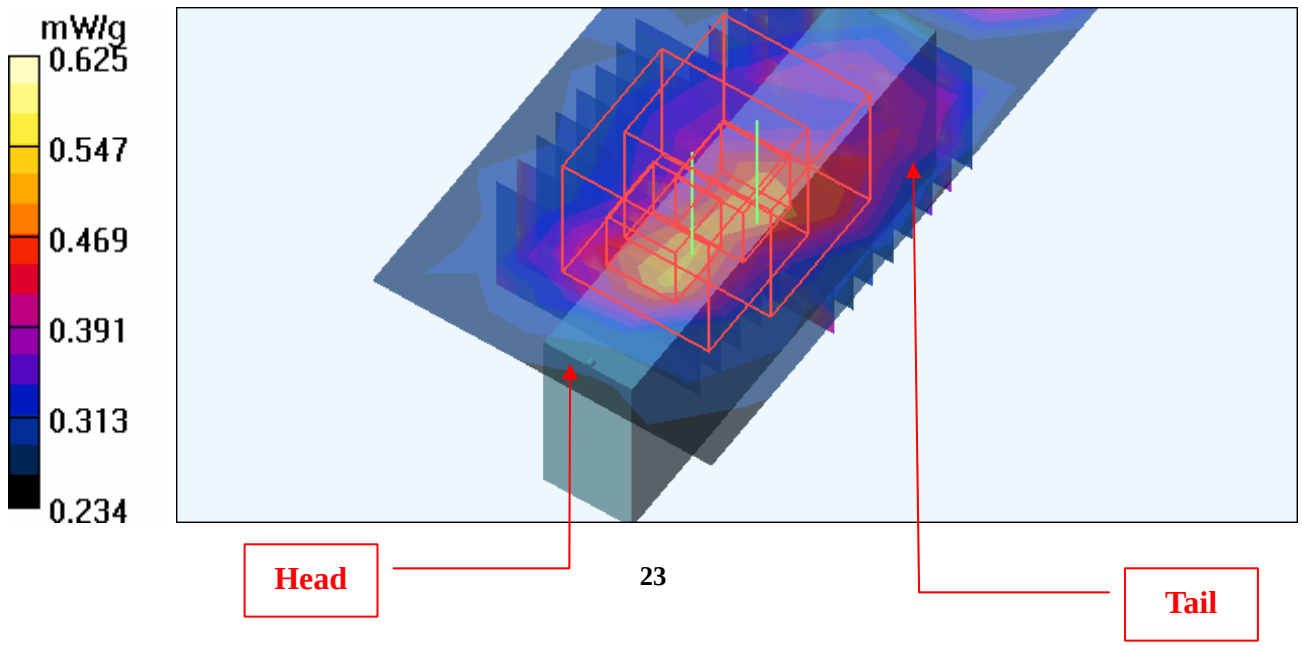

Date/Time: 2009/1/21 10:51:06

Test Laboratory: Bureau Veritas ADT

M22-11aN 40M-Ch159

DUT: 802.11a/b/g/n dual band WLAN USB Dongle ; Type: WLAN-1501

Communication System: 11n 5G span40 ; Frequency: 5795 MHz ; Duty Cycle: 1:1 ; Modulation type: BPSK

Medium: MSL5800 Medium parameters used: f = 5795 MHz; σ = 6.16 mho/m; ε_r = 49.6; ρ = 1000 kg/m^3

Phantom section: Flat Section ; Separation distance : 5 mm (The edge side of the EUT to the Phantom)

DASY4 Configuration:
- Probe: EX3DV3 - SN3506 ; ConvF(3.87, 3.87, 3.87) ; Calibrated: 2008/9/30
- Sensor-Surface: 3mm (Mechanical Surface Detection)
- Electronics: DAE3 Sn579 ; Calibrated: 2008/3/13
- Phantom: SAM 12 ; Type: SAM V4.0 ; Serial: TP 1202
- Measurement SW: DASY4, V4.7 Build 53 ; Postprocessing SW: SEMCAD, V1.8 Build 172

High Channel 159/Area Scan (6x10x1): Measurement grid: dx=10mm, dy=10mm
Maximum value of SAR (measured) = 0.569 mW/g

High Channel 159/Zoom Scan (8x8x8)/Cube 0: Measurement grid: dx=4.3mm, dy=4.3mm, dz=3mm
Reference Value = 9.35 V/m
Peak SAR (extrapolated) = 0.859 W/kg
SAR(1 g) = 0.581 mW/g; SAR(10 g) = 0.405 mW/g
Maximum value of SAR (measured) = 0.721 mW/g

High Channel 159/Zoom Scan (8x8x8)/Cube 1: Measurement grid: dx=4.3mm, dy=4.3mm, dz=3mm
Reference Value = 9.35 V/m
Peak SAR (extrapolated) = 0.789 W/kg
SAR(1 g) = 0.408 mW/g; SAR(10 g) = 0.348 mW/g
Maximum value of SAR (measured) = 0.527 mW/g

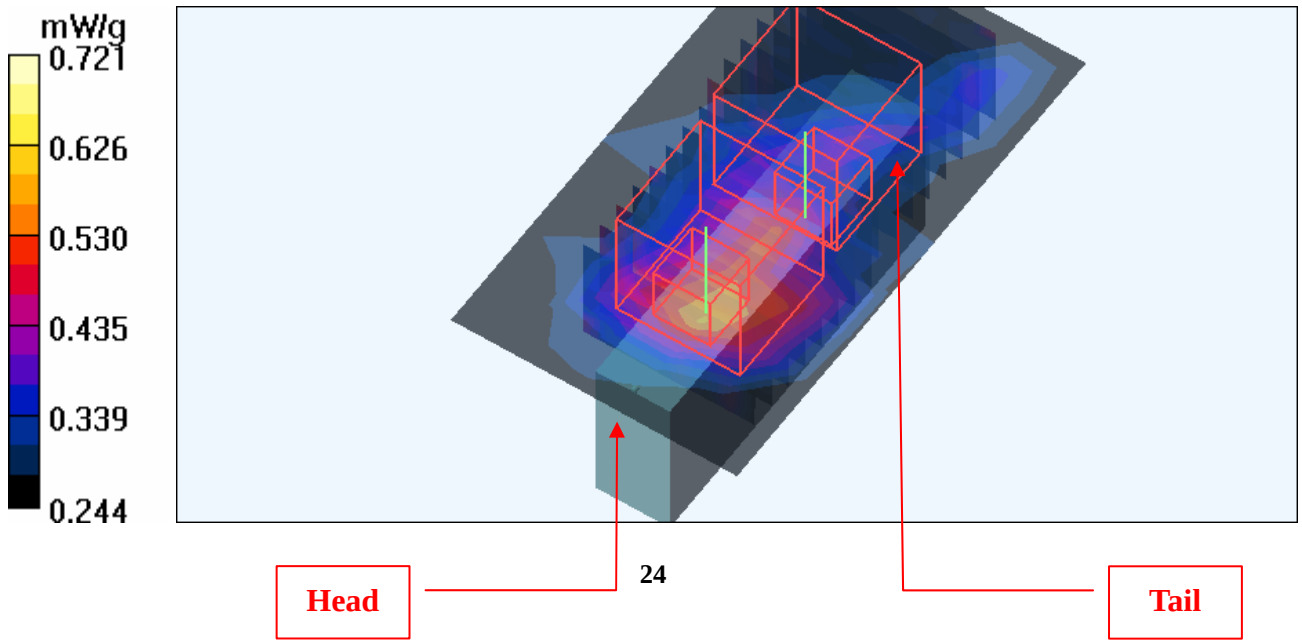

Date/Time: 2009/1/21 12:10:46

Test Laboratory: Bureau Veritas ADT

M23-11a-Ch165

DUT: 802.11a/b/g/n dual band WLAN USB Dongle ; Type: WLAN-1501

Communication System: 802.11a ; Frequency: 5825 MHz ; Duty Cycle: 1:1 ; Modulation type: BPSK
Medium: MSL5800 Medium parameters used: f = 5825 MHz; σ = 6.21 mho/m; ε_r = 49.5; ρ = 1000 kg/m^3
Phantom section: Flat Section ; Separation distance : 5 mm (The front side of the EUT to the Phantom)

DASY4 Configuration:
- Probe: EX3DV3 - SN3506 ; ConvF(3.87, 3.87, 3.87) ; Calibrated: 2008/9/30
- Sensor-Surface: 3mm (Mechanical Surface Detection)
- Electronics: DAE3 Sn579 ; Calibrated: 2008/3/13
- Phantom: SAM 12 ; Type: SAM V4.0 ; Serial: TP 1202
- Measurement SW: DASY4, V4.7 Build 53 ; Postprocessing SW: SEMCAD, V1.8 Build 172

High Channel 165/Area Scan (6x10x1): Measurement grid: dx=10mm, dy=10mm
Maximum value of SAR (measured) = 0.194 mW/g

High Channel 165/Zoom Scan (8x8x8)/Cube 0: Measurement grid: dx=4.3mm, dy=4.3mm, dz=3mm
Reference Value = 3.32 V/m
Peak SAR (extrapolated) = 0.769 W/kg
SAR(1 g) = 0.117 mW/g; SAR(10 g) = 0.052 mW/g
Maximum value of SAR (measured) = 0.203 mW/g

High Channel 165/Zoom Scan (8x8x8)/Cube 1: Measurement grid: dx=4.3mm, dy=4.3mm, dz=3mm
Reference Value = 3.32 V/m
Peak SAR (extrapolated) = 0.827 W/kg
SAR(1 g) = 0.162 mW/g; SAR(10 g) = 0.083 mW/g
Maximum value of SAR (measured) = 0.210 mW/g

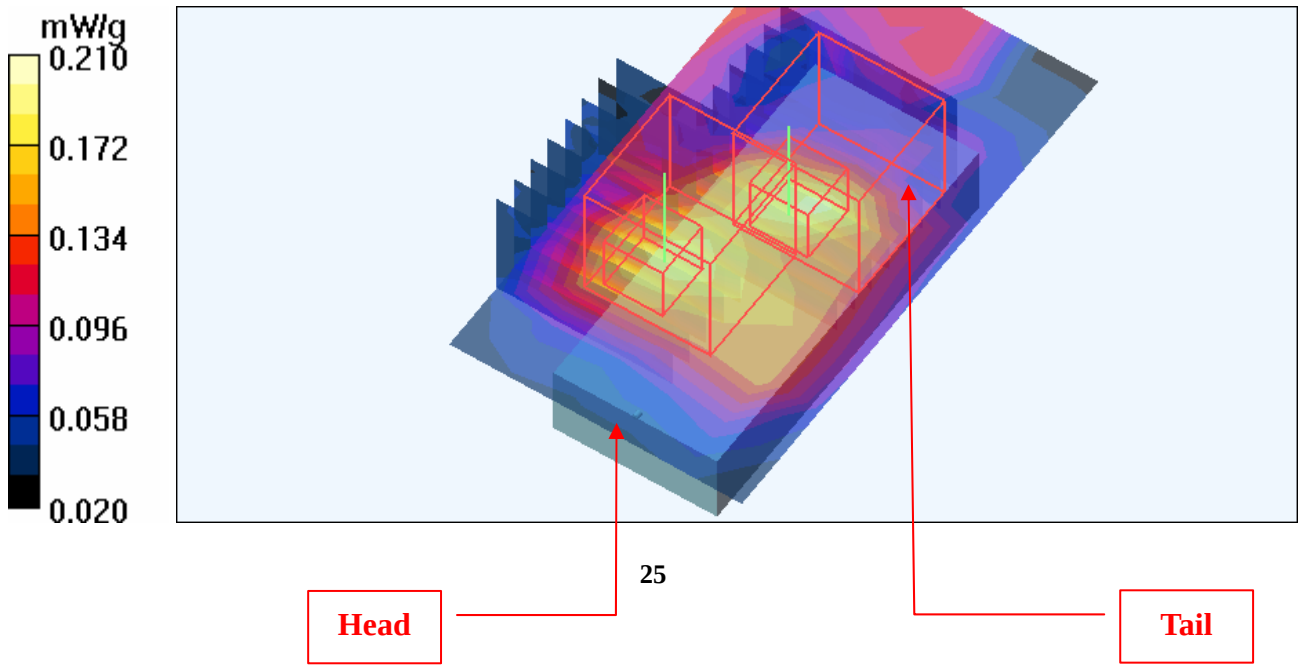

Date/Time: 2009/1/21 13:27:26

Test Laboratory: Bureau Veritas ADT

M24-11aN 20M-Ch165

DUT: 802.11a/b/g/n dual band WLAN USB Dongle ; Type: WLAN-1501

Communication System: 11n 5G span20 ; Frequency: 5825 MHz ; Duty Cycle: 1:1 ; Modulation type: BPSK

Medium: MSL5800 Medium parameters used: f = 5825 MHz; σ = 6.21 mho/m; ε_r = 49.5; ρ = 1000 kg/m^3

Phantom section: Flat Section ; Separation distance : 5 mm (The front side of the EUT to the Phantom)

DASY4 Configuration:

- Probe: EX3DV3 - SN3506 ; ConvF(3.87, 3.87, 3.87) ; Calibrated: 2008/9/30
- Sensor-Surface: 3mm (Mechanical Surface Detection)
- Electronics: DAE3 Sn579 ; Calibrated: 2008/3/13
- Phantom: SAM 12 ; Type: SAM V4.0 ; Serial: TP 1202
- Measurement SW: DASY4, V4.7 Build 53 ; Postprocessing SW: SEMCAD, V1.8 Build 172

High Channel 165/Area Scan (6x10x1): Measurement grid: dx=10mm, dy=10mm

Maximum value of SAR (measured) = 0.246 mW/g

High Channel 165/Zoom Scan (8x8x8)/Cube 0: Measurement grid: dx=4.3mm, dy=4.3mm, dz=3mm

Reference Value = 4.61 V/m

Peak SAR (extrapolated) = 0.335 W/kg

SAR(1 g) = 0.171 mW/g; SAR(10 g) = 0.132 mW/g

Maximum value of SAR (measured) = 0.250 mW/g

High Channel 165/Zoom Scan (8x8x8)/Cube 0: Measurement grid: dx=4.3mm, dy=4.3mm, dz=3mm

Reference Value = 4.61 V/m

Peak SAR (extrapolated) = 0.302 W/kg

SAR(1 g) = 0.156 mW/g; SAR(10 g) = 0.123 mW/g

Maximum value of SAR (measured) = 0.224 mW/g

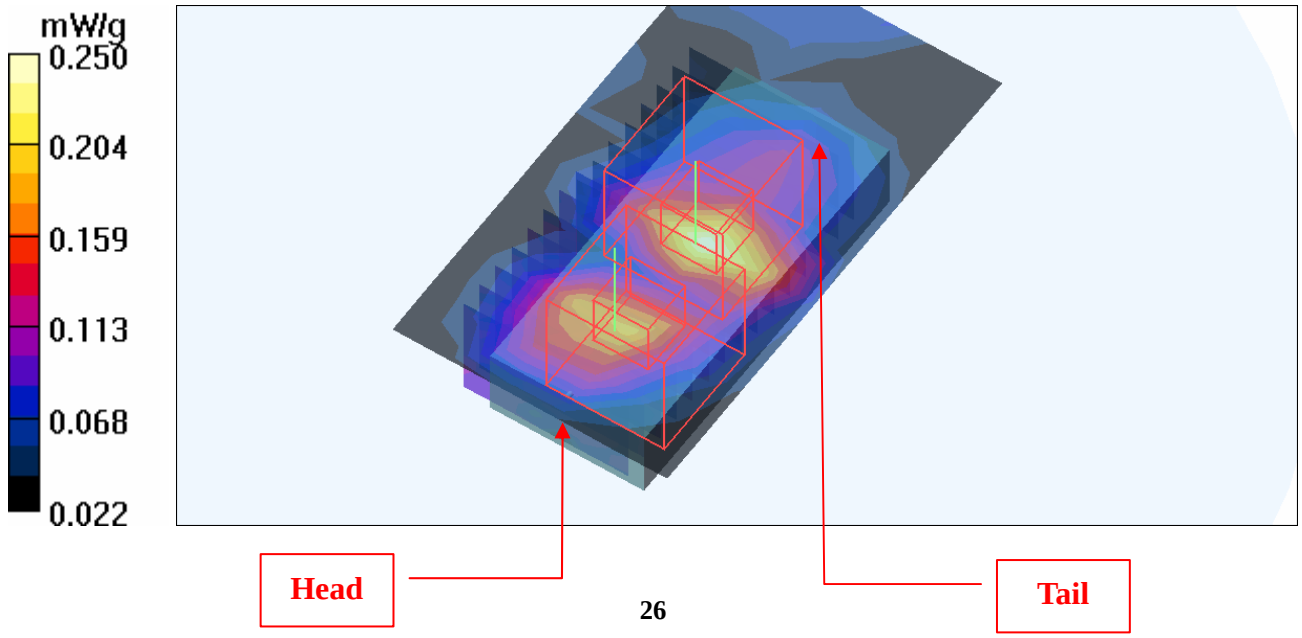

Date/Time: 2009/1/21 15:18:39

Test Laboratory: Bureau Veritas ADT

M25-11aN 40M-Ch159

DUT: 802.11a/b/g/n dual band WLAN USB Dongle ; Type: WLAN-1501

Communication System: 11n 5G span40 ; Frequency: 5795 MHz ; Duty Cycle: 1:1 ; Modulation type: BPSK

Medium: MSL5800 Medium parameters used: f = 5795 MHz; σ = 6.16 mho/m; ε_r = 49.6; ρ = 1000 kg/m^3

Phantom section: Flat Section ; Separation distance : 5 mm (The front side of the EUT to the Phantom)

DASY4 Configuration:
- Probe: EX3DV3 - SN3506 ; ConvF(3.87, 3.87, 3.87) ; Calibrated: 2008/9/30
- Sensor-Surface: 3mm (Mechanical Surface Detection)
- Electronics: DAE3 Sn579 ; Calibrated: 2008/3/13
- Phantom: SAM 12 ; Type: SAM V4.0 ; Serial: TP 1202
- Measurement SW: DASY4, V4.7 Build 53 ; Postprocessing SW: SEMCAD, V1.8 Build 172

High Channel 159/Area Scan (6x10x1): Measurement grid: dx=10mm, dy=10mm
Maximum value of SAR (measured) = 0.115 mW/g

High Channel 159/Zoom Scan (8x8x8)/Cube 0: Measurement grid: dx=4.3mm, dy=4.3mm, dz=3mm
Reference Value = 3.55 V/m
Peak SAR (extrapolated) = 0.255 W/kg
SAR(1 g) = 0.095 mW/g; SAR(10 g) = 0.054 mW/g
Maximum value of SAR (measured) = 0.133 mW/g

High Channel 159/Zoom Scan (8x8x8)/Cube 1: Measurement grid: dx=4.3mm, dy=4.3mm, dz=3mm
Reference Value = 3.55 V/m
Peak SAR (extrapolated) = 0.235 W/kg
SAR(1 g) = 0.057 mW/g; SAR(10 g) = 0.036 mW/g
Maximum value of SAR (measured) = 0.123 mW/g

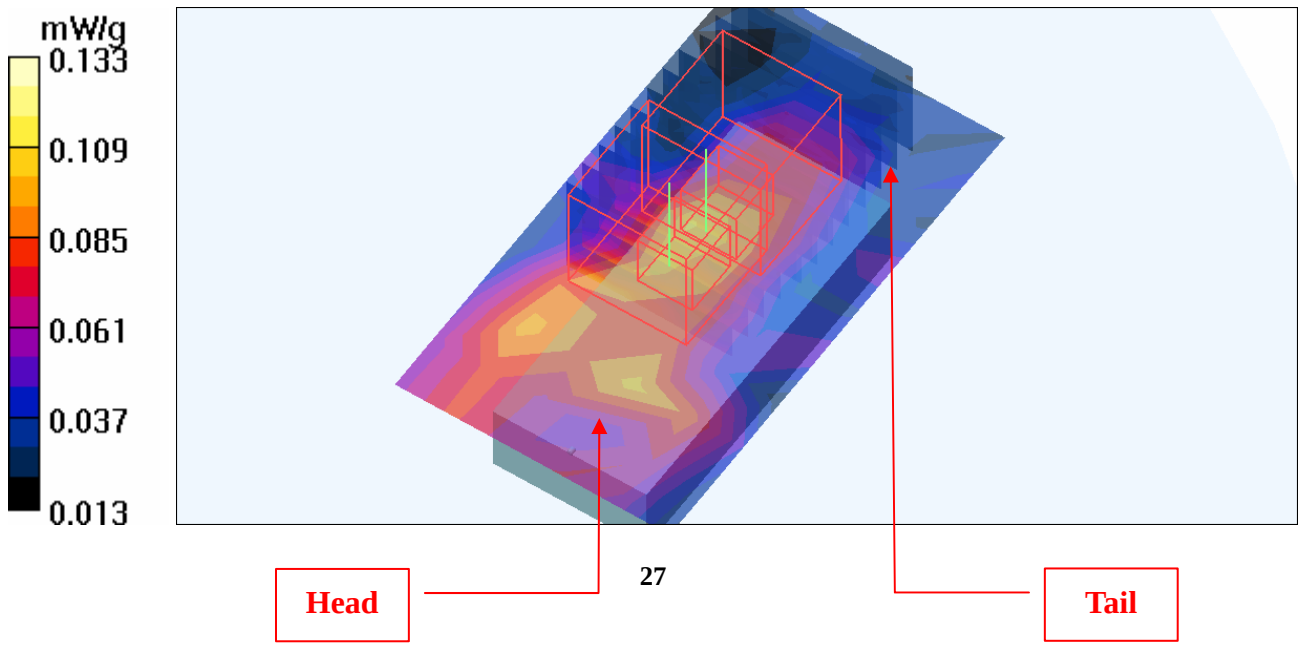

Date/Time: 2009/1/21 16:42:59

Test Laboratory: Bureau Veritas ADT

M26-11a-Ch165

DUT: 802.11a/b/g/n dual band WLAN USB Dongle ; Type: WLAN-1501

Communication System: 802.11a ; Frequency: 5825 MHz ; Duty Cycle: 1:1 ; Modulation type: BPSK
Medium: MSL5800 Medium parameters used: f = 5825 MHz; σ = 6.21 mho/m; ε_r = 49.5; ρ = 1000 kg/m^3
Phantom section: Flat Section ; Separation distance : 5 mm (The edge side of the EUT to the Phantom)

DASY4 Configuration:
- Probe: EX3DV3 - SN3506 ; ConvF(3.87, 3.87, 3.87) ; Calibrated: 2008/9/30
- Sensor-Surface: 3mm (Mechanical Surface Detection)
- Electronics: DAE3 Sn579 ; Calibrated: 2008/3/13
- Phantom: SAM 12 ; Type: SAM V4.0 ; Serial: TP 1202
- Measurement SW: DASY4, V4.7 Build 53 ; Postprocessing SW: SEMCAD, V1.8 Build 172

High Channel 165/Area Scan (6x10x1): Measurement grid: dx=10mm, dy=10mm
Maximum value of SAR (measured) = 0.468 mW/g

High Channel 165/Zoom Scan (8x8x8)/Cube 0: Measurement grid: dx=4.3mm, dy=4.3mm, dz=3mm
Reference Value = 7.13 V/m
Peak SAR (extrapolated) = 0.886 W/kg
SAR(1 g) = 0.479 mW/g; SAR(10 g) = 0.342 mW/g
Maximum value of SAR (measured) = 0.675 mW/g

High Channel 165/Zoom Scan (8x8x8)/Cube 1: Measurement grid: dx=4.3mm, dy=4.3mm, dz=3mm
Reference Value = 7.13 V/m
Peak SAR (extrapolated) = 0.839 W/kg
SAR(1 g) = 0.441 mW/g; SAR(10 g) = 0.328 mW/g
Maximum value of SAR (measured) = 0.638 mW/g

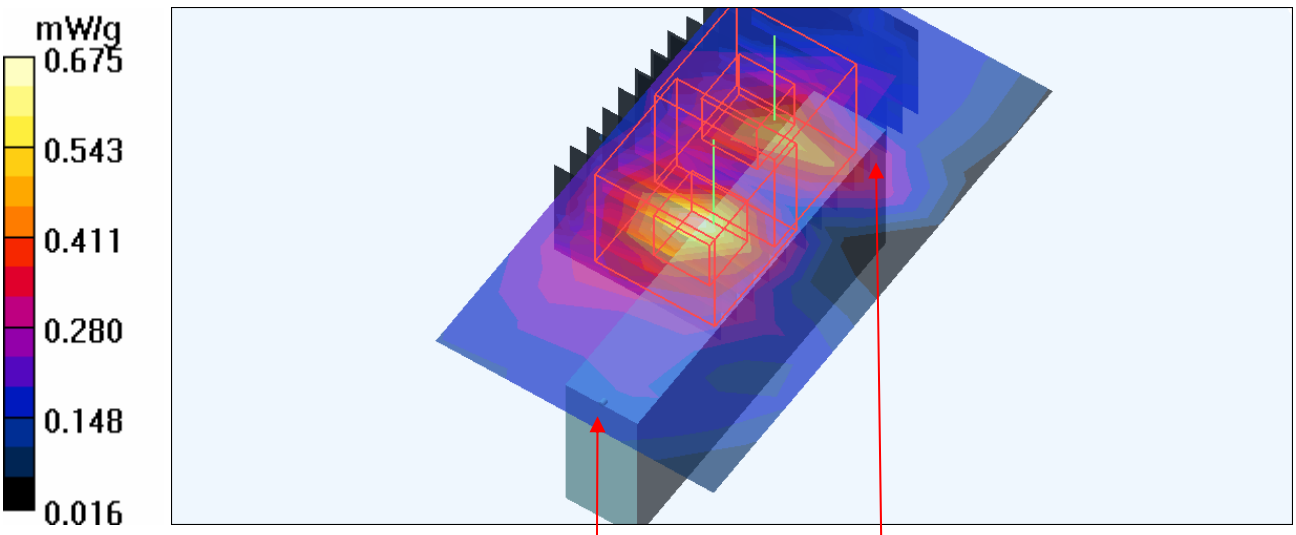

Head

Tail

Date/Time: 2009/1/21 18:05:10

Test Laboratory: Bureau Veritas ADT

M27-11aN 20M-Ch165

DUT: 802.11a/b/g/n dual band WLAN USB Dongle ; Type: WLAN-1501

Communication System: 11n 5G span20 ; Frequency: 5825 MHz ; Duty Cycle: 1:1 ; Modulation type: BPSK

Medium: MSL5800 Medium parameters used: f = 5825 MHz; σ = 6.21 mho/m; ε_r = 49.5; ρ = 1000 kg/m^3

Phantom section: Flat Section ; Separation distance : 5 mm (The edge side of the EUT to the Phantom)

DASY4 Configuration:
- Probe: EX3DV3 - SN3506 ; ConvF(3.87, 3.87, 3.87) ; Calibrated: 2008/9/30
- Sensor-Surface: 3mm (Mechanical Surface Detection)
- Electronics: DAE3 Sn579 ; Calibrated: 2008/3/13
- Phantom: SAM 12 ; Type: SAM V4.0 ; Serial: TP 1202
- Measurement SW: DASY4, V4.7 Build 53 ; Postprocessing SW: SEMCAD, V1.8 Build 172

High Channel 165/Area Scan (6x10x1): Measurement grid: dx=10mm, dy=10mm
Maximum value of SAR (measured) = 0.424 mW/g

High Channel 165/Zoom Scan (8x8x8)/Cube 0: Measurement grid: dx=4.3mm, dy=4.3mm, dz=3mm
Reference Value = 7.44 V/m
Peak SAR (extrapolated) = 0.781 W/kg
SAR(1 g) = 0.422 mW/g; SAR(10 g) = 0.298 mW/g
Maximum value of SAR (measured) = 0.586 mW/g

High Channel 165/Zoom Scan (8x8x8)/Cube 1: Measurement grid: dx=4.3mm, dy=4.3mm, dz=3mm
Reference Value = 7.44 V/m
Peak SAR (extrapolated) = 0.724 W/kg
SAR(1 g) = 0.407 mW/g; SAR(10 g) = 0.271 mW/g
Maximum value of SAR (measured) = 0.543 mW/g

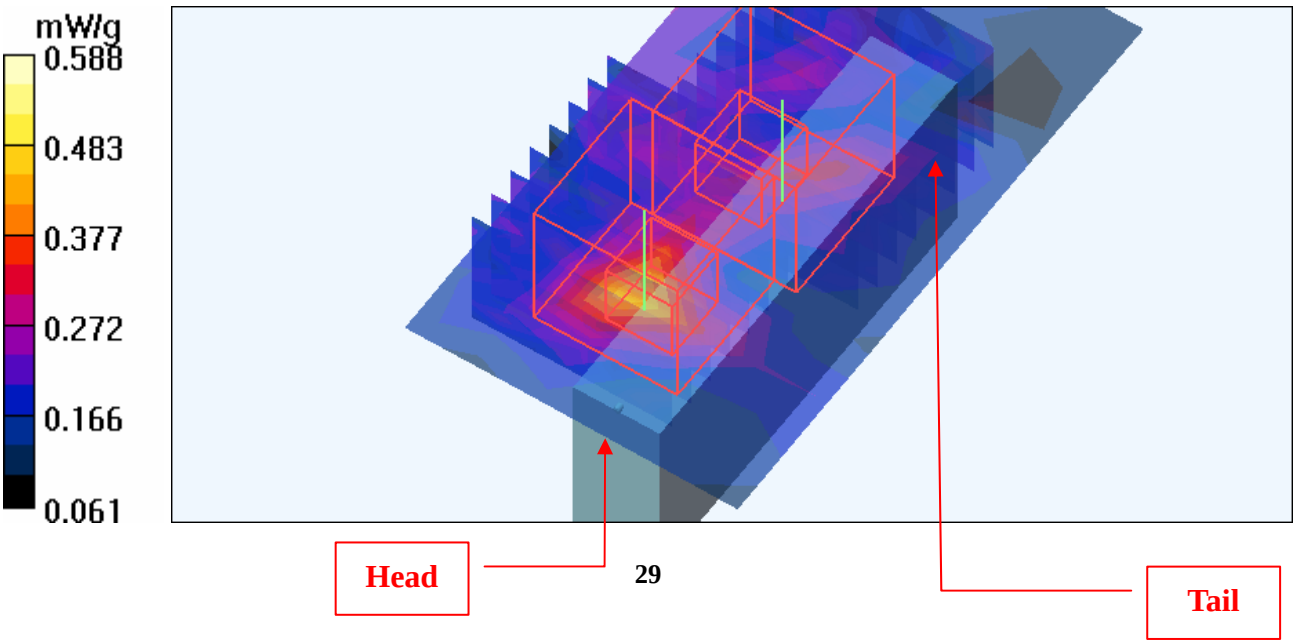

Date/Time: 2009/1/21 19:36:22

Test Laboratory: Bureau Veritas ADT

M28-11aN 40M-Ch159

DUT: 802.11a/b/g/n dual band WLAN USB Dongle ; Type: WLAN-1501

Communication System: 11n 5G span40 ; Frequency: 5795 MHz ; Duty Cycle: 1:1 ; Modulation type: BPSK

Medium: MSL5800 Medium parameters used: f = 5795 MHz; σ = 6.16 mho/m; ε_r = 49.6; ρ = 1000 kg/m^3

Phantom section: Flat Section ; Separation distance : 5 mm (The edge side of the EUT to the Phantom)

DASY4 Configuration:
- Probe: EX3DV3 - SN3506 ; ConvF(3.87, 3.87, 3.87) ; Calibrated: 2008/9/30
- Sensor-Surface: 3mm (Mechanical Surface Detection)
- Electronics: DAE3 Sn579 ; Calibrated: 2008/3/13
- Phantom: SAM 12 ; Type: SAM V4.0 ; Serial: TP 1202
- Measurement SW: DASY4, V4.7 Build 53 ; Postprocessing SW: SEMCAD, V1.8 Build 172

High Channel 159/Area Scan (6x10x1): Measurement grid: dx=10mm, dy=10mm

Maximum value of SAR (measured) = 0.526 mW/g

High Channel 159/Zoom Scan (8x8x8)/Cube 0: Measurement grid: dx=4.3mm, dy=4.3mm, dz=3mm

Reference Value = 8.85 V/m

Peak SAR (extrapolated) = 0.962 W/kg

SAR(1 g) = 0.546 mW/g; SAR(10 g) = 0.363 mW/g

Maximum value of SAR (measured) = 0.705 mW/g

High Channel 159/Zoom Scan (8x8x8)/Cube 1: Measurement grid: dx=4.3mm, dy=4.3mm, dz=3mm

Reference Value = 8.85 V/m

Peak SAR (extrapolated) = 0.914 W/kg

SAR(1 g) = 0.527 mW/g; SAR(10 g) = 0.339 mW/g

Maximum value of SAR (measured) = 0.676 mW/g

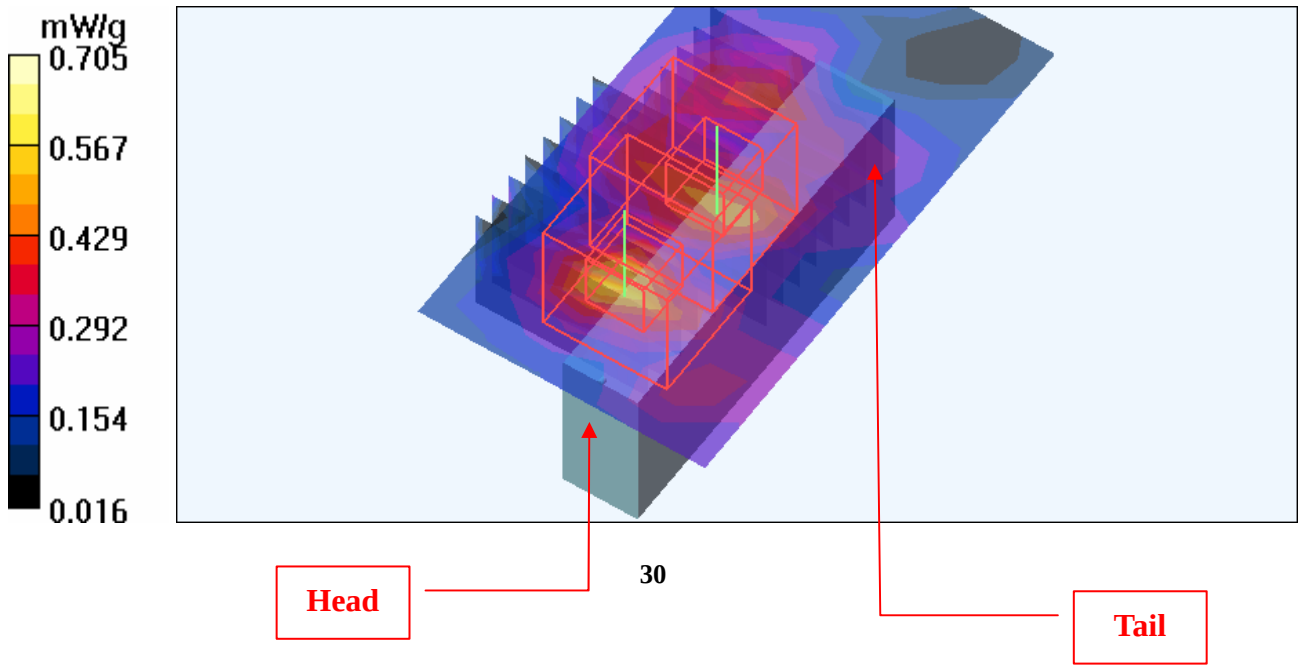

Date/Time: 2009/1/21 22:47:03

Test Laboratory: Bureau Veritas ADT

Bottom-D630-11aN 40M-Ch159 (Step Size Set Min)

DUT: 802.11a/b/g/n dual band WLAN USB Dongle ; Type: WLAN-1501

Communication System: 11n 5G span40 ; Frequency: 5795 MHz ; Duty Cycle: 1:1 ; Modulation type: BPSK

Medium: MSL5800 Medium parameters used: f = 5795 MHz; σ = 6.16 mho/m; ε_r = 49.6; ρ = 1000 kg/m^3

Phantom section: Flat Section ; Separation distance : 5 mm (The bottom side of the EUT to the Phantom)

DASY4 Configuration:
- Probe: EX3DV3 - SN3506 ; ConvF(3.87, 3.87, 3.87) ; Calibrated: 2008/9/30
- Sensor-Surface: 2mm (Mechanical Surface Detection)
- Electronics: DAE3 Sn579 ; Calibrated: 2008/3/13
- Phantom: SAM 12 ; Type: SAM V4.0 ; Serial: TP 1202
- Measurement SW: DASY4, V4.7 Build 53 ; Postprocessing SW: SEMCAD, V1.8 Build 172

High Channel 159/Area Scan (6x10x1): Measurement grid: dx=10mm, dy=10mm

Maximum value of SAR (measured) = 0.895 mW/g

High Channel 159/Zoom Scan (15x15x11)/Cube 0: Measurement grid: dx=2.15mm, dy=2.15mm, dz=2mm

Reference Value = 10.8 V/m

Peak SAR (extrapolated) = 0.844 W/kg

SAR(1 g) = 0.645 mW/g; SAR(10 g) = 0.418 mW/g

Maximum value of SAR (measured) = 0.910 mW/g

High Channel 159/Zoom Scan (15x15x11)/Cube 1: Measurement grid: dx=2.15mm, dy=2.15mm, dz=2mm

Reference Value = 10.8 V/m

Peak SAR (extrapolated) = 0.785 W/kg

SAR(1 g) = 0.531 mW/g; SAR(10 g) = 0.390 mW/g

Maximum value of SAR (measured) = 0.799 mW/g

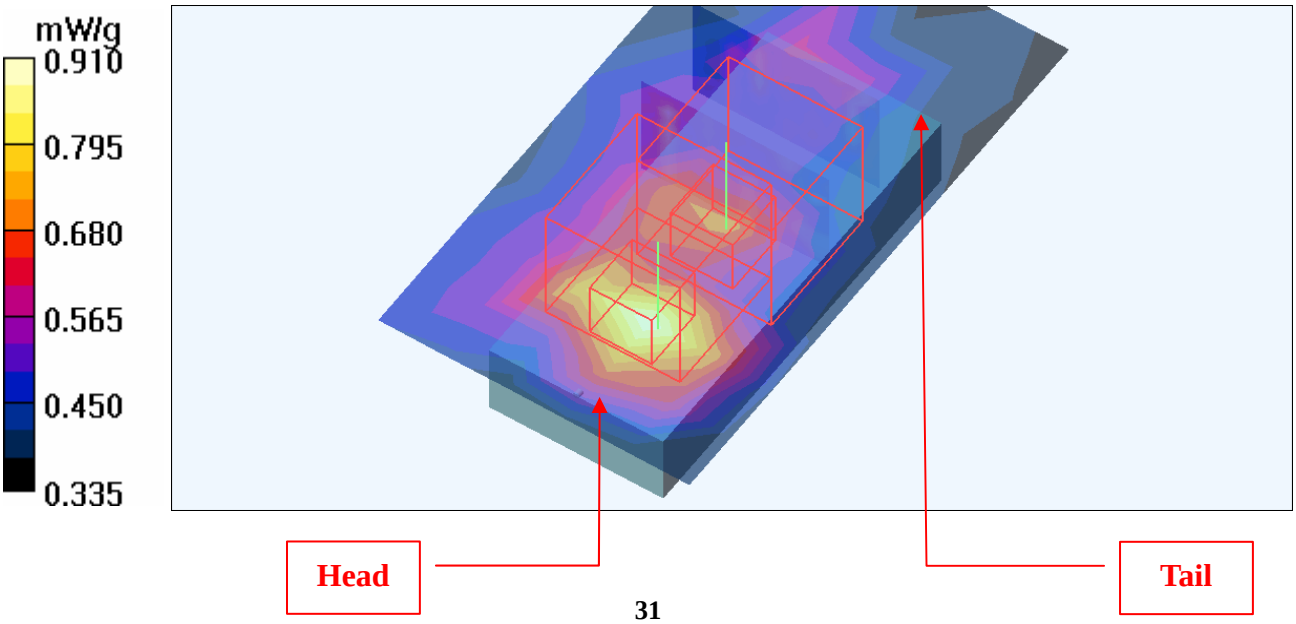

Date/Time: 2009/1/20 11:27:11

Test Laboratory: Bureau Veritas ADT

System Validation Check-MSL 2450MHz

DUT: Dipole 2450 MHz ; Type: D2450V2 ; Serial: 737 ; Test Frequency: 2450 MHz

Communication System: CW ; Frequency: 2450 MHz; Duty Cycle: 1:1; Modulation type: CW
Medium: MSL2450;Medium parameters used: f = 2450 MHz; σ = 1.98 mho/m; ε_r = 54.2; ρ = 1000 kg/m^3 ; Liquid level : 152 mm
Phantom section: Flat Section ; Separation distance : 10 mm (The feetpoint of the dipole to the Phantom)Air temp. : 23.1 degrees ; Liquid temp. : 22.0 degrees

DASY4 Configuration:
- Probe: EX3DV3 - SN3506 ; ConvF(7.52, 7.52, 7.52) ; Calibrated: 2008/9/30
- Sensor-Surface: 3mm (Mechanical Surface Detection)
- Electronics: DAE3 Sn579; Calibrated: 2008/3/13
- Phantom: SAM 12; Type: SAM V4.0; Serial: TP 1202
- Measurement SW: DASY4, V4.7 Build 53; Postprocessing SW: SEMCAD, V1.8 Build 172

d=10mm, Pin=250mW/Area Scan (5x7x1): Measurement grid: dx=15mm, dy=15mm
Maximum value of SAR (measured) = 17.3 mW/g

d=10mm, Pin=250mW/Zoom Scan (7x7x7)/Cube 0: Measurement grid: dx=5mm, dy=5mm, dz=5mm
Reference Value = 94.6 V/m; Power Drift = -0.072 dB
Peak SAR (extrapolated) = 29.3 W/kg
SAR(1 g) = 13.3 mW/g; SAR(10 g) = 6.01 mW/g
Maximum value of SAR (measured) = 17.2 mW/g

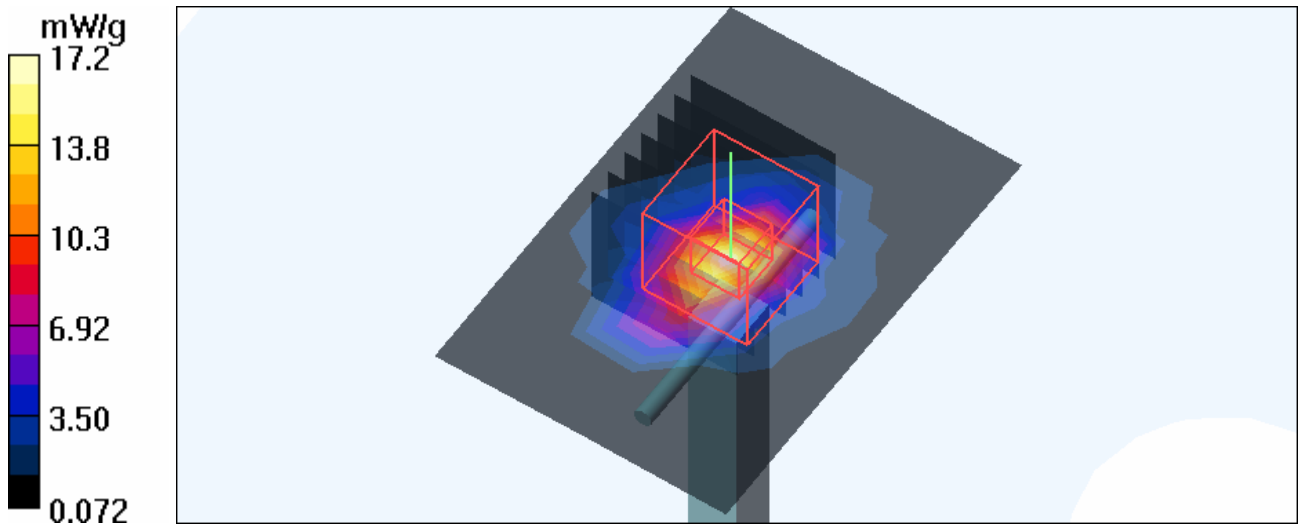

Date/Time: 2009/1/21 01:31:09

Test Laboratory: Bureau Veritas ADT

System Validation Check-MSL 5GHz

DUT: Dipole 5 GHz ; Type: D5GHzV2 ; Serial: 1018 ; Test Frequency: 5800 MHz

Communication System: CW ; Frequency: 5800 MHz; Duty Cycle: 1:1; Modulation type: CW
Medium: MSL5800;Medium parameters used: f = 5800 MHz; σ = 6.17 mho/m; ε_r = 49.5; ρ = 1000 kg/m^3 ; Liquid level : 150 mm
Phantom section: Flat Section ; Separation distance : 10 mm (The feetpoint of the dipole to the Phantom)Air temp. : 22.5 degrees ; Liquid temp. : 21.7 degrees

DASY4 Configuration:
- Probe: EX3DV3 - SN3506 ; ConvF(3.87, 3.87, 3.87) ; Calibrated: 2008/9/30
- Sensor-Surface: 3mm (Mechanical Surface Detection)
- Electronics: DAE3 Sn579; Calibrated: 2008/3/13
- Phantom: SAM 12; Type: SAM V4.0; Serial: TP 1202
- Measurement SW: DASY4, V4.7 Build 53; Postprocessing SW: SEMCAD, V1.8 Build 172

f=5800, d=10mm, Pin=100mW/Area Scan (6x6x1): Measurement grid: dx=10mm, dy=10mm
Maximum value of SAR (measured) = 7.29 mW/g
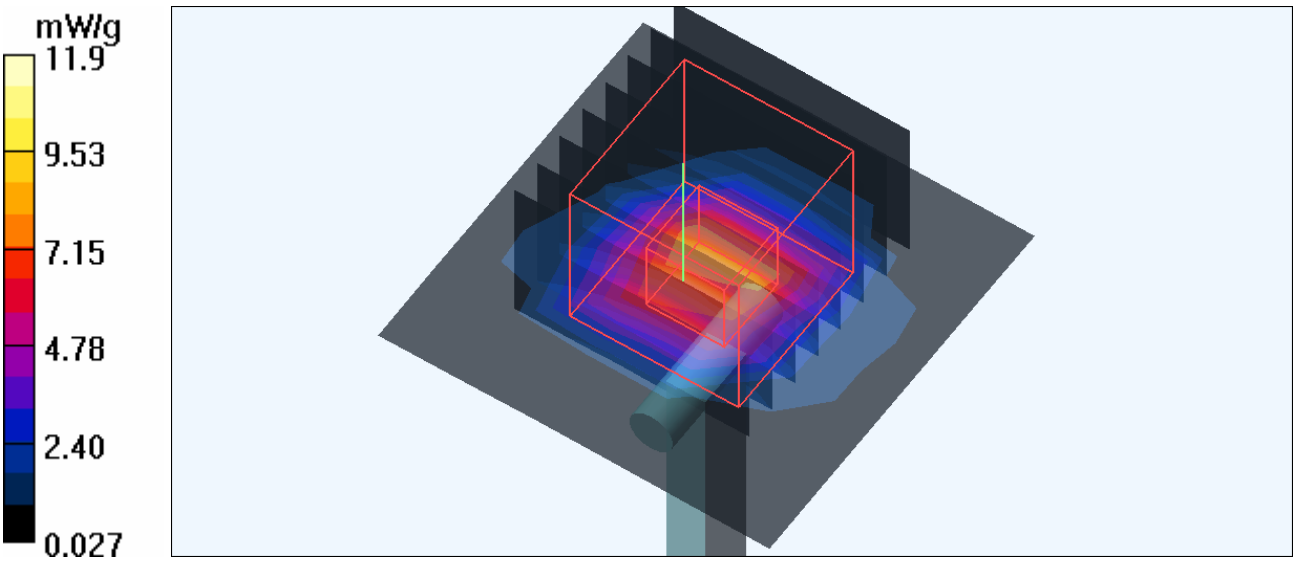
f=5800, d=10mm, Pin=100mW/Zoom Scan (8x8x8)/Cube 0: Measurement grid: dx=4.3mm, dy=4.3mm, dz=3mm
Reference Value = 48.8 V/m; Power Drift = -0.090 dB
Peak SAR (extrapolated) = 28.7 W/kg
SAR(1 g) = 7.23 mW/g; SAR(10 g) = 1.98 mW/g
Maximum value of SAR (measured) = 11.9 mW/g