Date/Time: 10/18/04 15:02:02

Test Laboratory: Advance Data Technology

WPC-3007 11b Bottom Dell D600 Mode 5 Ch 11

DUT: Atheros 802.11b/g Card Bus Adapter ; Type: WPC-3007 ; Test Channel Frequency: 2462 MHz

Communication System: 802.11b ; Frequency: 2462 MHz ; Duty Cycle: 1:1 ; Modulation type: CCK
Medium: MSL2450 Medium parameters used: f = 2462 MHz; σ = 1.99 mho/m; ε_r = 52.9; ρ = 1000 kg/m^3 ; Liquid level : 155mm
Phantom section: Flat Section ; Separation distance : 14 mm (The bottom side of the EUT to the Phantom)
Antenna type : Internal Antenna ; Air temp. : 22.0 degrees ; Liquid temp. : 21.0 degrees
DASY4 Configuration:
- Probe: ET3DV6 - SN1687 ; ConvF(4.23, 4.23, 4.23) ; Calibrated: 2004/8/26
- Sensor-Surface: 4mm (Mechanical Surface Detection)
- Electronics: DAE3 Sn510 ; Calibrated: 2004/8/17
- Phantom: SAM 12 ; Type: SAM V4.0 ; Serial: TP 1202
- Measurement SW: DASY4, V4.3 Build 22 ; Postprocessing SW: SEMCAD, V1.8 Build 127

High Channel/Area Scan (7x8x1): Measurement grid: dx=15mm, dy=15mm
Maximum value of SAR (measured) = 0.265 mW/g

High Channel/Zoon Scan (7x7x7)/Cube 0: Measurement grid: dx=5mm, dy=5mm, dz=5mm
Reference Value = 9.45 V/m; Power Drift = -0.2 dB
Peak SAR (extrapolated) = 0.433 W/kg
SAR(1 g) = 0.246 mW/g; SAR(10 g) = 0.140 mW/g
Maximum value of SAR (measured) = 0.266 mW/g

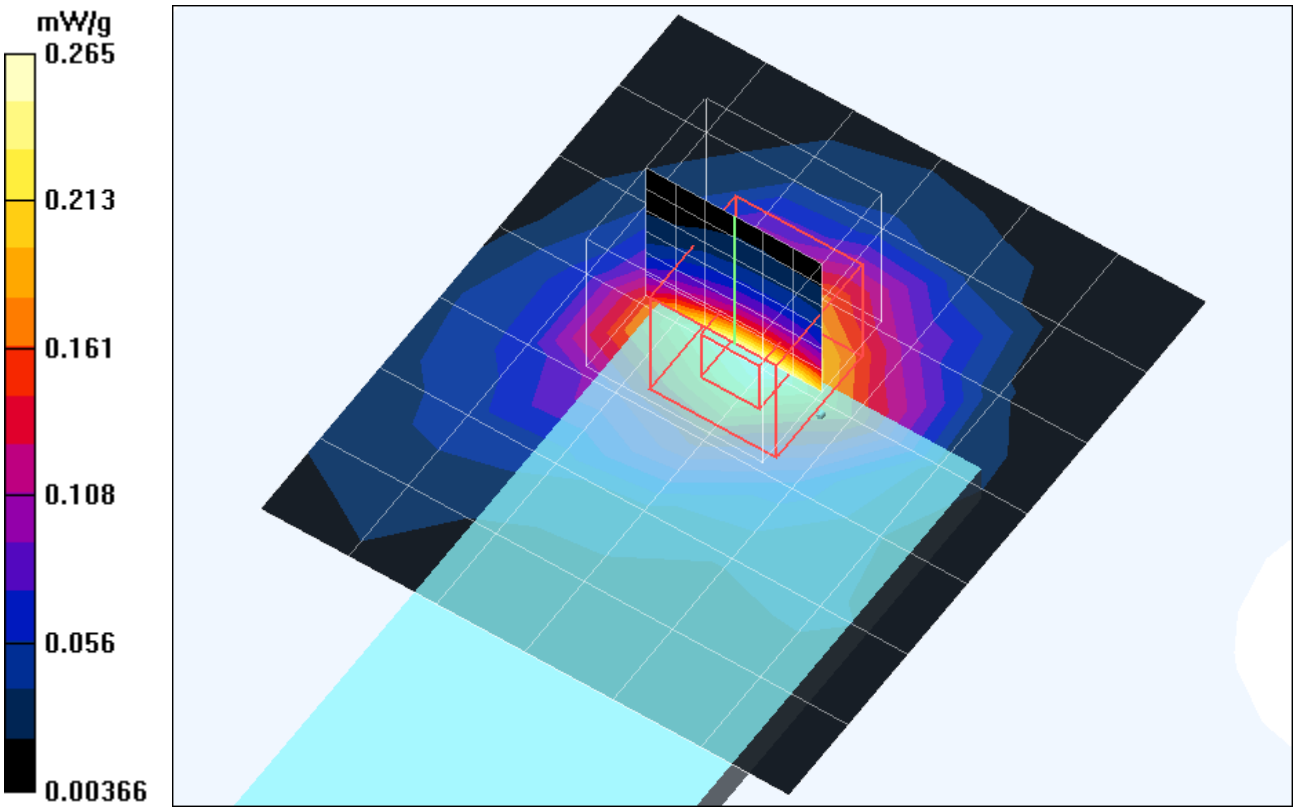

Date/Time: 10/18/04 16:13:31

Test Laboratory: Advance Data Technology

WPC-3007 11b Tip Dell D600 Mode 6 Ch 1

DUT: Atheros 802.11b/g Card Bus Adapter ; Type: WPC-3007 ; Test Channel Frequency: 2412 MHz

Communication System: 802.11b ; Frequency: 2412 MHz; Duty Cycle: 1:1; Modulation type: CCK
Medium: MSL2450 Medium parameters used: f = 2412 MHz; σ = 1.93 mho/m; ε_r = 52.9; ρ = 1000 kg/m^3 ; Liquid level : 155 mm
Phantom section: Flat Section ; Separation distance : 15 mm (The tip of the EUT to the Phantom)
Antenna type : Internal Antenna ; Air temp. : 22.0 degrees ; Liquid temp. : 21.0 degrees
DASY4 Configuration:
- Probe: ET3DV6 - SN1687 ; ConvF(4.23, 4.23, 4.23) ; Calibrated: 2004/8/26
- Sensor-Surface: 4mm (Mechanical Surface Detection)
- Electronics: DAE3 Sn510; Calibrated: 2004/8/17
- Phantom: SAM 12; Type: SAM V4.0; Serial: TP 1202
- Measurement SW: DASY4, V4.3 Build 22; Postprocessing SW: SEMCAD, V1.8 Build 127

Low Channel/Area Scan (5x6x1): Measurement grid: dx=15mm, dy=15mm
Maximum value of SAR (measured) = 0.162 mW/g

Low Channel/Zoon Scan (7x7x7)/Cube 0: Measurement grid: dx=5mm, dy=5mm, dz=5mm
Reference Value = 9.51 V/m; Power Drift = -0.2 dB
Peak SAR (extrapolated) = 0.246 W/kg
SAR(1 g) = 0.153 mW/g; SAR(10 g) = 0.092 mW/g
Maximum value of SAR (measured) = 0.165 mW/g

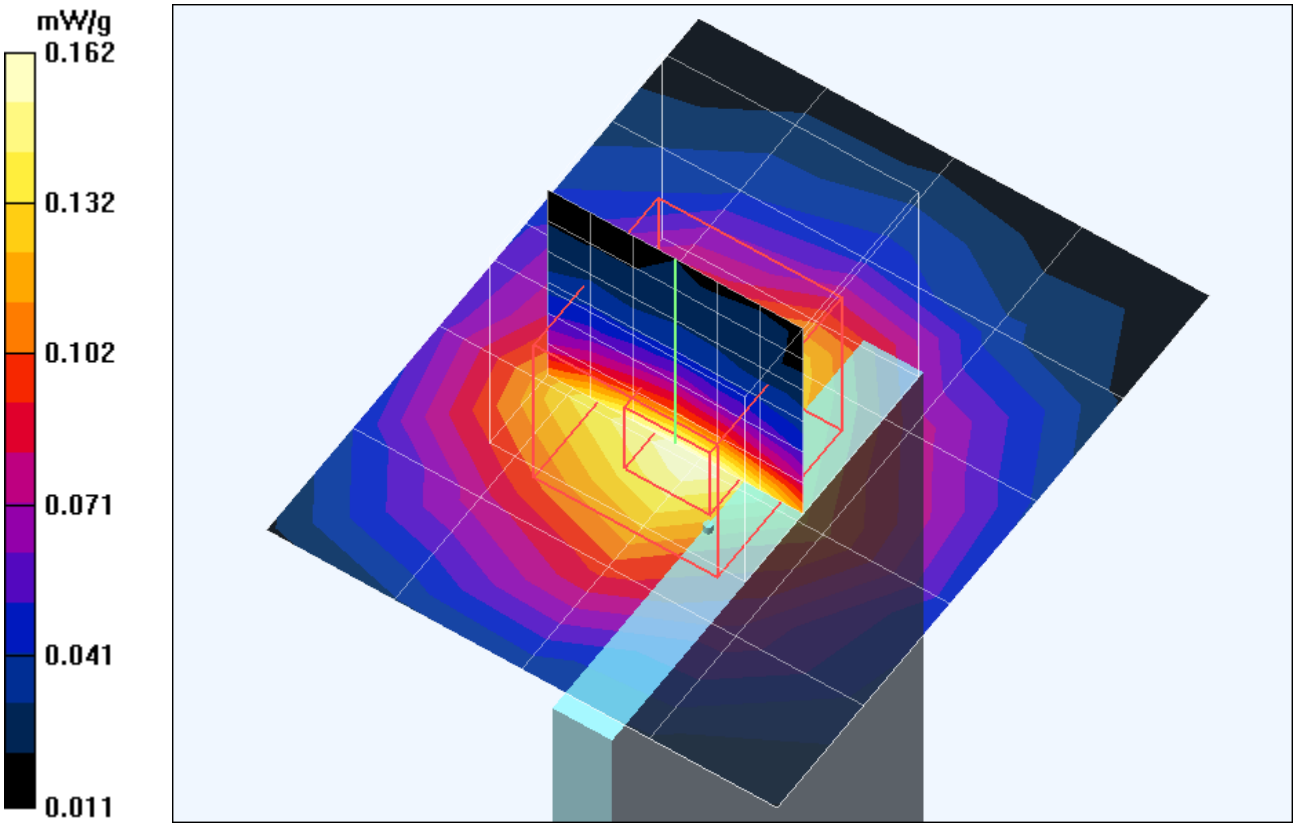

Date/Time: 10/18/04 15:57:48

Test Laboratory: Advance Data Technology

WPC-3007 11b Tip Dell D600 Mode 6 Ch 6

DUT: Atheros 802.11b/g Card Bus Adapter ; Type: WPC-3007 ; Test Channel Frequency: 2437 MHz

Communication System: 802.11b ; Frequency: 2437 MHz; Duty Cycle: 1:1; Modulation type: CCK
Medium: MSL2450 Medium parameters used: f = 2437 MHz; σ = 1.97 mho/m; ε_r = 52.9; ρ = 1000 kg/m^3 ; Liquid level : 155 mm
Phantom section: Flat Section ; Separation distance : 15 mm (The tip of the EUT to the Phantom)
Antenna type : Internal Antenna ; Air temp. : 22.0 degrees ; Liquid temp. : 21.0 degrees
DASY4 Configuration:
- Probe: ET3DV6 - SN1687 ; ConvF(4.23, 4.23, 4.23) ; Calibrated: 2004/8/26
- Sensor-Surface: 4mm (Mechanical Surface Detection)
- Electronics: DAE3 Sn510; Calibrated: 2004/8/17
- Phantom: SAM 12; Type: SAM V4.0; Serial: TP 1202
- Measurement SW: DASY4, V4.3 Build 22; Postprocessing SW: SEMCAD, V1.8 Build 127

Middle Channel/Area Scan (5x6x1): Measurement grid: dx=15mm, dy=15mm
Maximum value of SAR (measured) = 0.382 mW/g

Middle Channel/Zoon Scan (7x7x7)/Cube 0: Measurement grid: dx=5mm, dy=5mm, dz=5mm
Reference Value = 13.7 V/m; Power Drift = 0.2 dB
Peak SAR (extrapolated) = 0.602 W/kg
SAR(1 g) = 0.360 mW/g; SAR(10 g) = 0.214 mW/g
Maximum value of SAR (measured) = 0.388 mW/g

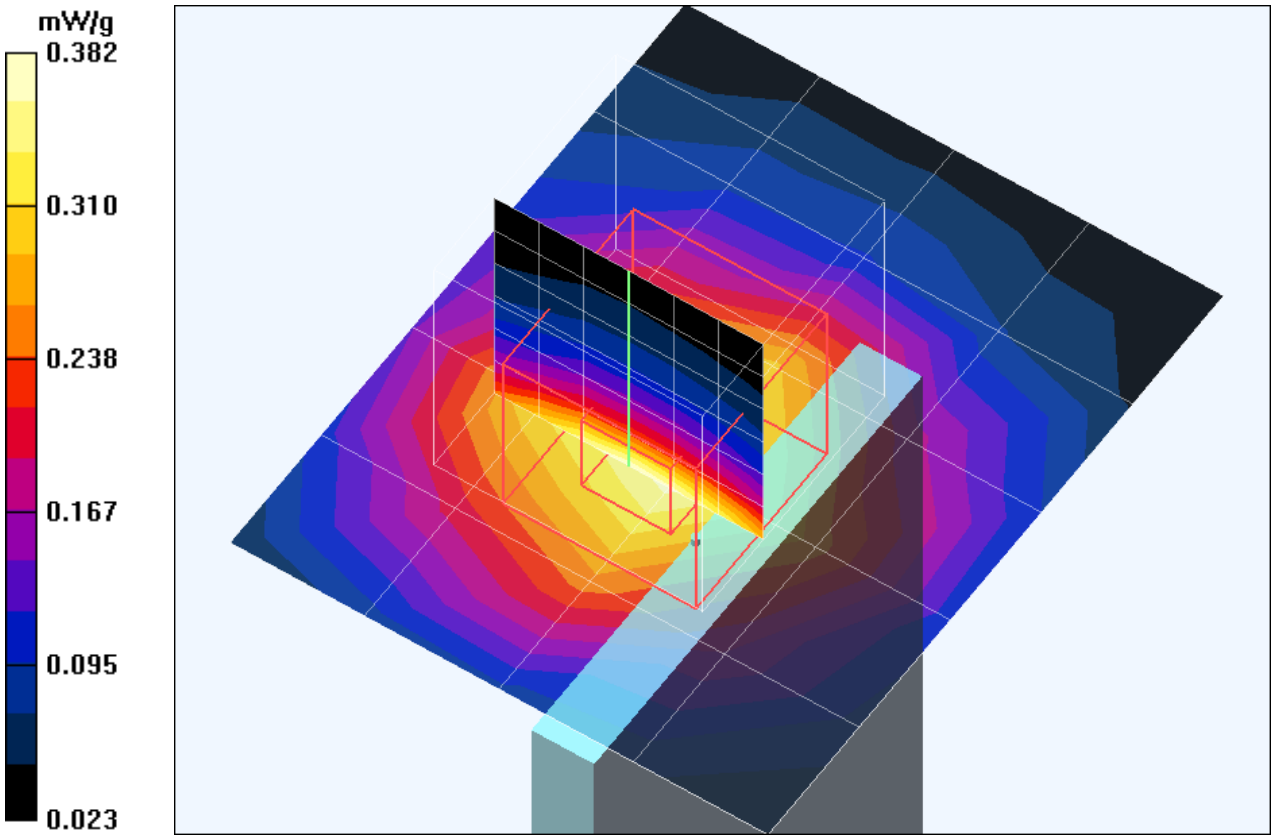

Date/Time: 10/18/04 16:29:33

Test Laboratory: Advance Data Technology

WPC-3007 11b Tip Dell D600 Mode 6 Ch 11

DUT: Atheros 802.11b/g Card Bus Adapter ; Type: WPC-3007 ; Test Channel Frequency: 2462 MHz

Communication System: 802.11b ; Frequency: 2462 MHz; Duty Cycle: 1:1; Modulation type: CCK
Medium: MSL2450 Medium parameters used: f = 2462 MHz; σ = 1.99 mho/m; ε_r = 52.9; ρ = 1000 kg/m^3 ; Liquid level : 155 mm
Phantom section: Flat Section ; Separation distance : 15 mm (The tip of the EUT to the Phantom)
Antenna type : Internal Antenna ; Air temp. : 22.0 degrees ; Liquid temp. : 21.0 degrees
DASY4 Configuration:
- Probe: ET3DV6 - SN1687 ; ConvF(4.23, 4.23, 4.23) ; Calibrated: 2004/8/26
- Sensor-Surface: 4mm (Mechanical Surface Detection)
- Electronics: DAE3 Sn510; Calibrated: 2004/8/17
- Phantom: SAM 12; Type: SAM V4.0; Serial: TP 1202
- Measurement SW: DASY4, V4.3 Build 22; Postprocessing SW: SEMCAD, V1.8 Build 127

High Channel/Area Scan (5x6x1): Measurement grid: dx=15mm, dy=15mm
Maximum value of SAR (measured) = 0.127 mW/g

High Channel/Zoon Scan (7x7x7)/Cube 0: Measurement grid: dx=5mm, dy=5mm, dz=5mm
Reference Value = 7.87 V/m; Power Drift = -0.2 dB
Peak SAR (extrapolated) = 0.189 W/kg
SAR(1 g) = 0.115 mW/g; SAR(10 g) = 0.069 mW/g
Maximum value of SAR (measured) = 0.125 mW/g

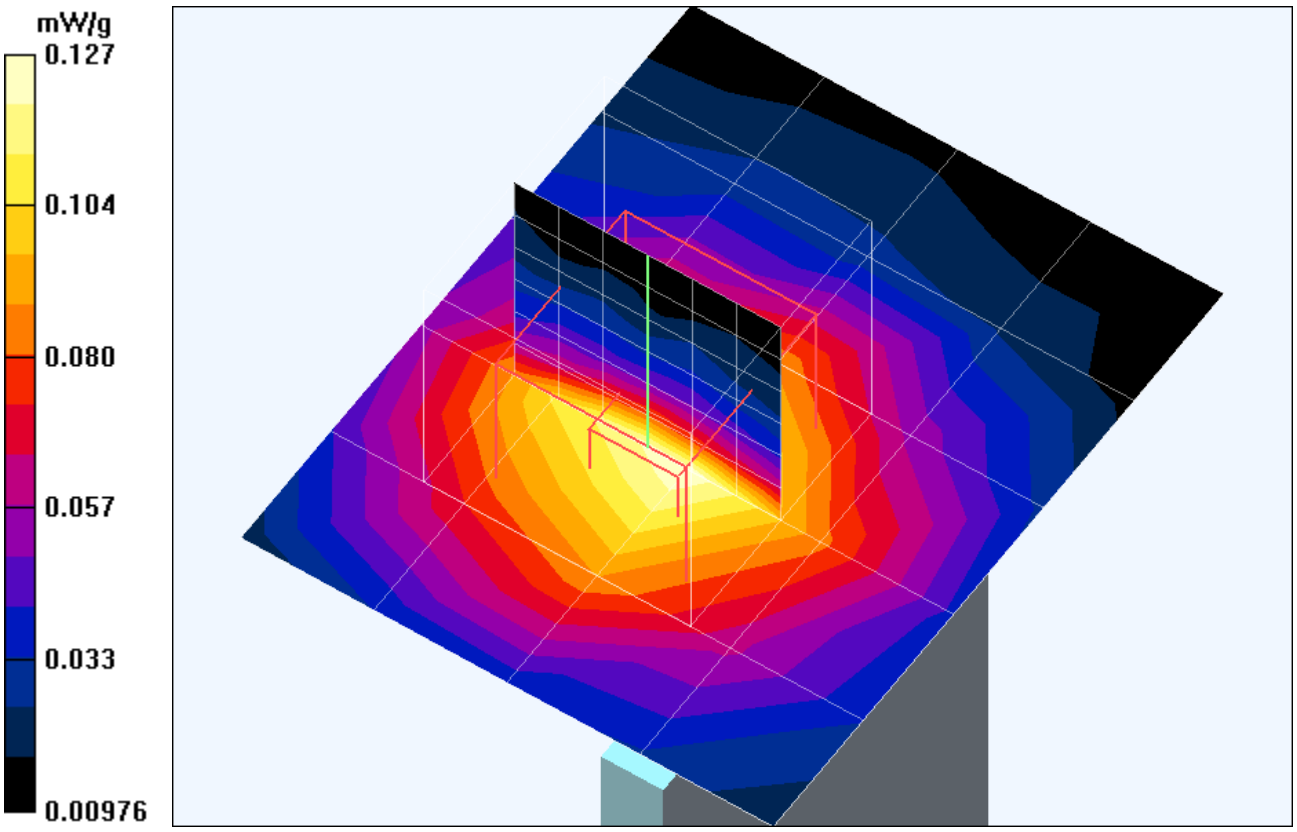

Date/Time: 10/18/04 15:20:10

Test Laboratory: Advance Data Technology

WPC-3007 11g Bottom Dell D600 Mode 7 Ch 1

DUT: Atheros 802.11b/g Card Bus Adapter ; Type: WPC-3007 ; Test Channel Frequency: 2412 MHz

Communication System: 802.11g ; Frequency: 2412 MHz ; Duty Cycle: 1:1 ; Modulation type: OFDM
Medium: MSL2450 Medium parameters used: f = 2412 MHz; σ = 1.93 mho/m; ε_r = 52.9; ρ = 1000 kg/m^3 ; Liquid level : 155mm
Phantom section: Flat Section ; Separation distance : 14 mm (The bottom side of the EUT to the Phantom)
Antenna type : Internal Antenna ; Air temp. : 22.0 degrees ; Liquid temp. : 21.0 degrees
DASY4 Configuration:
- Probe: ET3DV6 - SN1687 ; ConvF(4.23, 4.23, 4.23) ; Calibrated: 2004/8/26
- Sensor-Surface: 4mm (Mechanical Surface Detection)
- Electronics: DAE3 Sn510 ; Calibrated: 2004/8/17
- Phantom: SAM 12 ; Type: SAM V4.0 ; Serial: TP 1202
- Measurement SW: DASY4, V4.3 Build 22 ; Postprocessing SW: SEMCAD, V1.8 Build 127

Low Channel/Area Scan (7x8x1): Measurement grid: dx=15mm, dy=15mm
Maximum value of SAR (measured) = 0.249 mW/g

Low Channel/Zoon Scan (7x7x7)/Cube 0: Measurement grid: dx=5mm, dy=5mm, dz=5mm
Reference Value = 9.09 V/m; Power Drift = -0.2 dB
Peak SAR (extrapolated) = 0.403 W/kg
SAR(1 g) = 0.229 mW/g; SAR(10 g) = 0.130 mW/g
Maximum value of SAR (measured) = 0.245 mW/g

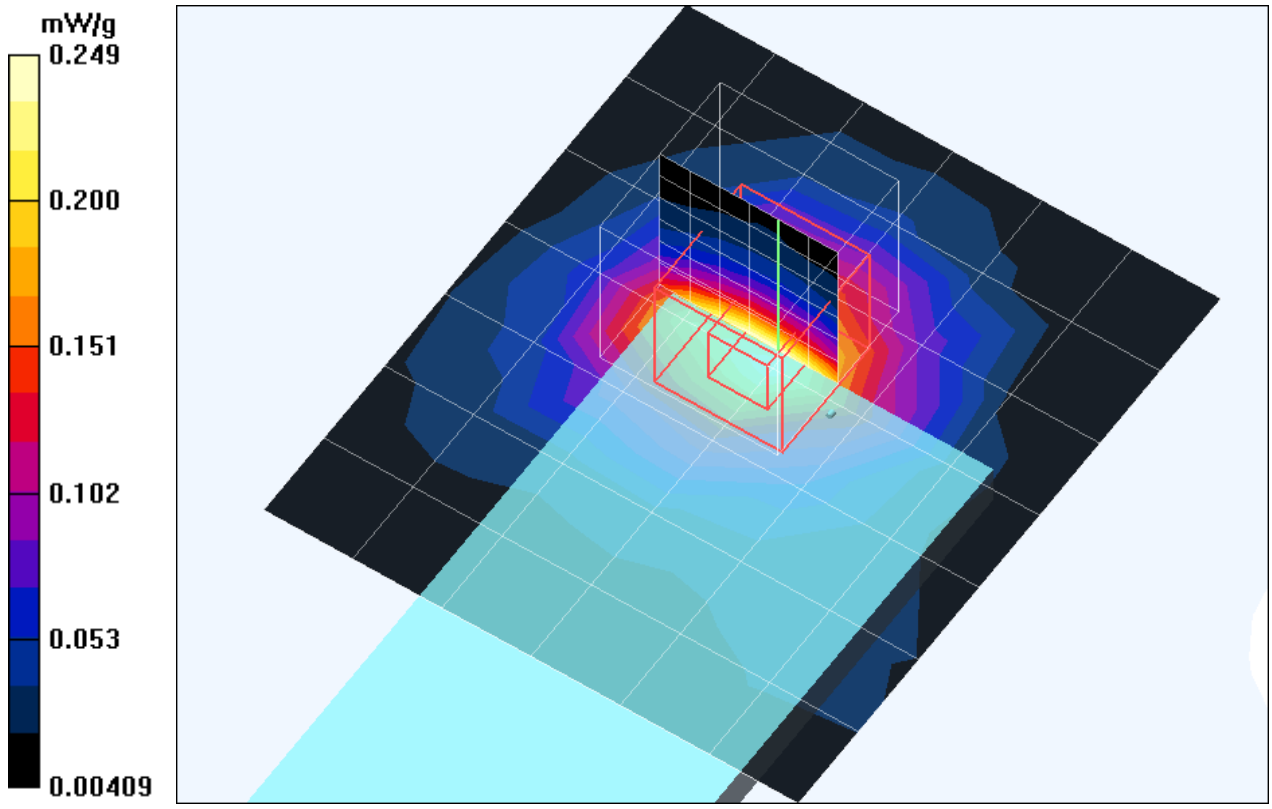

Date/Time: 10/18/04 14:23:56

Test Laboratory: Advance Data Technology

WPC-3007 11g Bottom Dell D600 Mode 7 Ch 6

DUT: Atheros 802.11b/g Card Bus Adapter ; Type: WPC-3007 ; Test Channel Frequency: 2437 MHz

Communication System: 802.11g ; Frequency: 2437 MHz ; Duty Cycle: 1:1 ; Modulation type: OFDM
Medium: MSL2450 Medium parameters used: f = 2437 MHz; σ = 1.97 mho/m; ε_r = 52.9; ρ = 1000 kg/m^3 ; Liquid level : 155mm
Phantom section: Flat Section ; Separation distance : 14 mm (The bottom side of the EUT to the Phantom)
Antenna type : Internal Antenna ; Air temp. : 22.0 degrees ; Liquid temp. : 21.0 degrees
DASY4 Configuration:
- Probe: ET3DV6 - SN1687 ; ConvF(4.23, 4.23, 4.23) ; Calibrated: 2004/8/26
- Sensor-Surface: 4mm (Mechanical Surface Detection)
- Electronics: DAE3 Sn510 ; Calibrated: 2004/8/17
- Phantom: SAM 12 ; Type: SAM V4.0 ; Serial: TP 1202
- Measurement SW: DASY4, V4.3 Build 22 ; Postprocessing SW: SEMCAD, V1.8 Build 127

Middle Channel/Area Scan (7x8x1): Measurement grid: dx=15mm, dy=15mm
Maximum value of SAR (measured) = 0.708 mW/g

Middle Channel/Zoon Scan (7x7x7)/Cube 0: Measurement grid: dx=5mm, dy=5mm, dz=5mm
Reference Value = 15.4 V/m; Power Drift = -0.2 dB
Peak SAR (extrapolated) = 1.13 W/kg
SAR(1 g) = 0.637 mW/g; SAR(10 g) = 0.362 mW/g
Maximum value of SAR (measured) = 0.687 mW/g

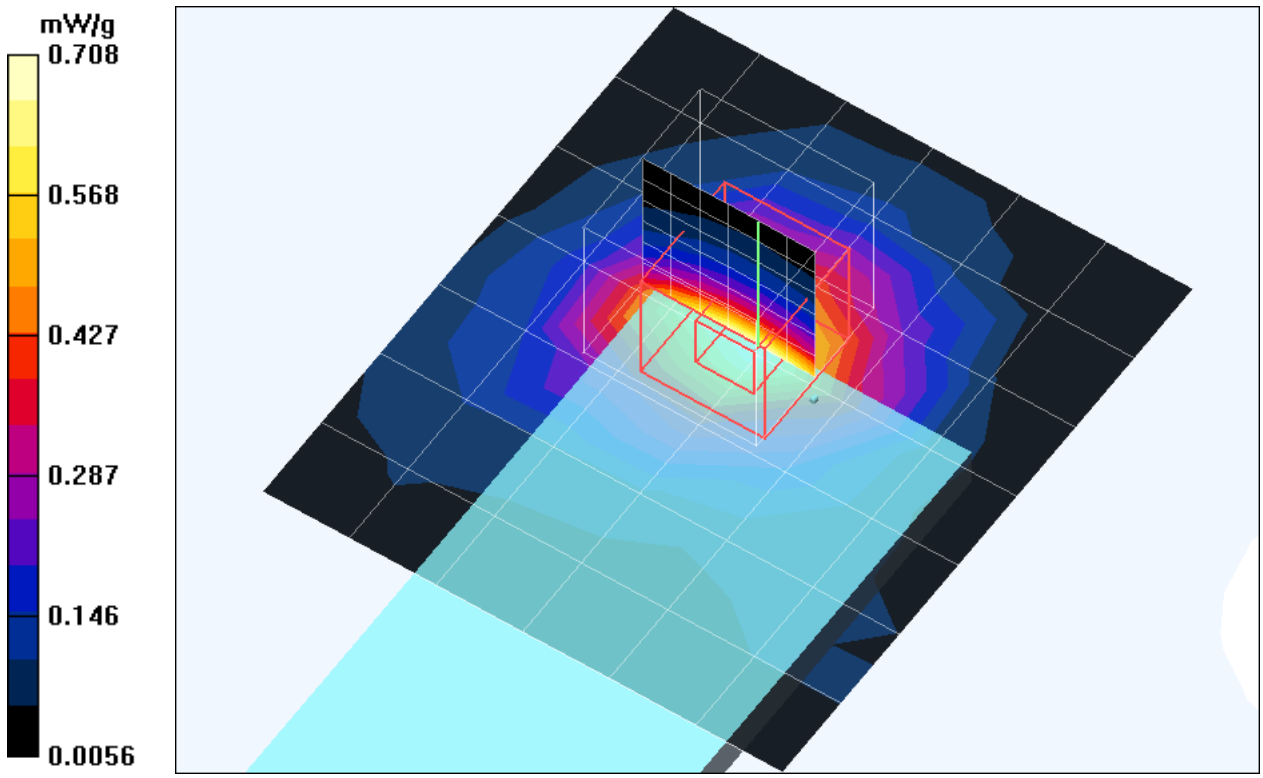

Date/Time: 10/18/04 15:40:12

Test Laboratory: Advance Data Technology

WPC-3007 11g Bottom Dell D600 Mode 7 Ch 11

DUT: Atheros 802.11b/g Card Bus Adapter ; Type: WPC-3007 ; Test Channel Frequency: 2462 MHz

Communication System: 802.11g ; Frequency: 2462 MHz ; Duty Cycle: 1:1 ; Modulation type: OFDM
Medium: MSL2450 Medium parameters used: f = 2462 MHz; σ = 1.99 mho/m; ε_r = 52.9; ρ = 1000 kg/m^3 ; Liquid level : 155mm
Phantom section: Flat Section ; Separation distance : 14 mm (The bottom side of the EUT to the Phantom)
Antenna type : Internal Antenna ; Air temp. : 22.0 degrees ; Liquid temp. : 21.0 degrees
DASY4 Configuration:
- Probe: ET3DV6 - SN1687 ; ConvF(4.23, 4.23, 4.23) ; Calibrated: 2004/8/26
- Sensor-Surface: 4mm (Mechanical Surface Detection)
- Electronics: DAE3 Sn510 ; Calibrated: 2004/8/17
- Phantom: SAM 12 ; Type: SAM V4.0 ; Serial: TP 1202
- Measurement SW: DASY4, V4.3 Build 22 ; Postprocessing SW: SEMCAD, V1.8 Build 127

High Channel/Area Scan (7x8x1): Measurement grid: dx=15mm, dy=15mm
Maximum value of SAR (measured) = 0.174 mW/g

High Channel/Zoon Scan (7x7x7)/Cube 0: Measurement grid: dx=5mm, dy=5mm, dz=5mm
Reference Value = 7.64 V/m; Power Drift = -0.2 dB
Peak SAR (extrapolated) = 0.279 W/kg
SAR(1 g) = 0.159 mW/g; SAR(10 g) = 0.090 mW/g
Maximum value of SAR (measured) = 0.172 mW/g

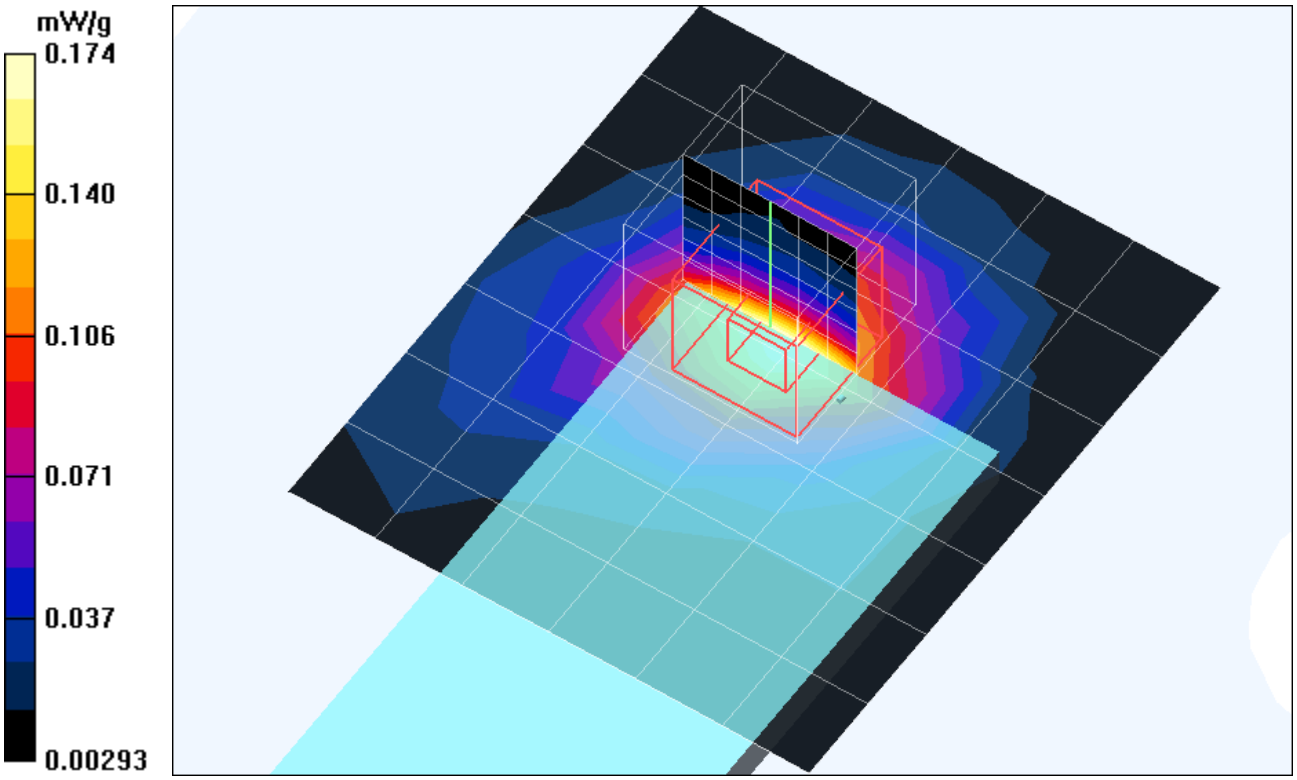

Date/Time: 10/18/04 17:02:10

Test Laboratory: Advance Data Technology

WPC-3007 11g Tip Dell D600 Mode 8 Ch 1

DUT: Atheros 802.11b/g Card Bus Adapter ; Type: WPC-3007 ; Test Channel Frequency: 2412 MHz

Communication System: 802.11g ; Frequency: 2412 MHz; Duty Cycle: 1:1; Modulation type: OFDM
Medium: MSL2450 Medium parameters used: f = 2412 MHz; σ = 1.93 mho/m; ε_r = 52.9; ρ = 1000 kg/m^3 ; Liquid level : 155 mm
Phantom section: Flat Section ; Separation distance : 15 mm (The tip of the EUT to the Phantom)
Antenna type : Internal Antenna ; Air temp. : 22.0 degrees ; Liquid temp. : 21.0 degrees
DASY4 Configuration:
- Probe: ET3DV6 - SN1687 ; ConvF(4.23, 4.23, 4.23) ; Calibrated: 2004/8/26
- Sensor-Surface: 4mm (Mechanical Surface Detection)
- Electronics: DAE3 Sn510; Calibrated: 2004/8/17
- Phantom: SAM 12; Type: SAM V4.0; Serial: TP 1202
- Measurement SW: DASY4, V4.3 Build 22; Postprocessing SW: SEMCAD, V1.8 Build 127

Low Channel/Area Scan (5x6x1): Measurement grid: dx=15mm, dy=15mm
Maximum value of SAR (measured) = 0.104 mW/g

Low Channel/Zoon Scan (7x7x7)/Cube 0: Measurement grid: dx=5mm, dy=5mm, dz=5mm
Reference Value = 7.68 V/m; Power Drift = -0.2 dB
Peak SAR (extrapolated) = 0.164 W/kg
SAR(1 g) = 0.099 mW/g; SAR(10 g) = 0.059 mW/g
Maximum value of SAR (measured) = 0.106 mW/g

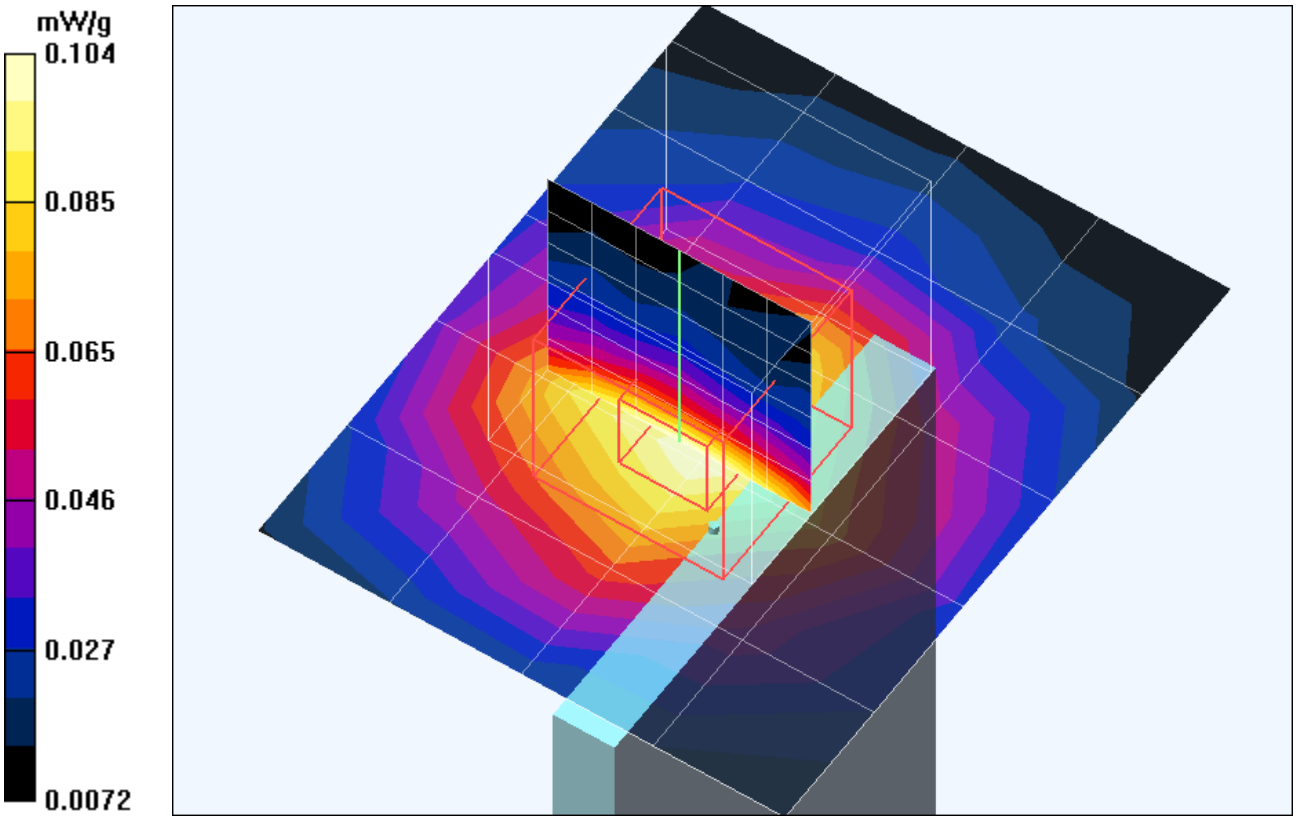

Date/Time: 10/18/04 16:46:34

Test Laboratory: Advance Data Technology

WPC-3007 11g Tip Dell D600 Mode 8 Ch 6

DUT: Atheros 802.11b/g Card Bus Adapter ; Type: WPC-3007 ; Test Channel Frequency: 2437 MHz

Communication System: 802.11g ; Frequency: 2437 MHz; Duty Cycle: 1:1; Modulation type: OFDM
Medium: MSL2450 Medium parameters used: f = 2437 MHz; σ = 1.97 mho/m; ε_r = 52.9; ρ = 1000 kg/m^3 ; Liquid level : 155 mm
Phantom section: Flat Section ; Separation distance : 15 mm (The tip of the EUT to the Phantom)
Antenna type : Internal Antenna ; Air temp. : 22.0 degrees ; Liquid temp. : 21.0 degrees
DASY4 Configuration:
- Probe: ET3DV6 - SN1687 ; ConvF(4.23, 4.23, 4.23) ; Calibrated: 2004/8/26
- Sensor-Surface: 4mm (Mechanical Surface Detection)
- Electronics: DAE3 Sn510; Calibrated: 2004/8/17
- Phantom: SAM 12; Type: SAM V4.0; Serial: TP 1202
- Measurement SW: DASY4, V4.3 Build 22; Postprocessing SW: SEMCAD, V1.8 Build 127

Middle Channel/Area Scan (5x6x1): Measurement grid: dx=15mm, dy=15mm
Maximum value of SAR (measured) = 0.314 mW/g

Middle Channel/Zoon Scan (7x7x7)/Cube 0: Measurement grid: dx=5mm, dy=5mm, dz=5mm
Reference Value = 13.1 V/m; Power Drift = -0.2 dB
Peak SAR (extrapolated) = 0.496 W/kg
SAR(1 g) = 0.294 mW/g; SAR(10 g) = 0.172 mW/g
Maximum value of SAR (measured) = 0.323 mW/g

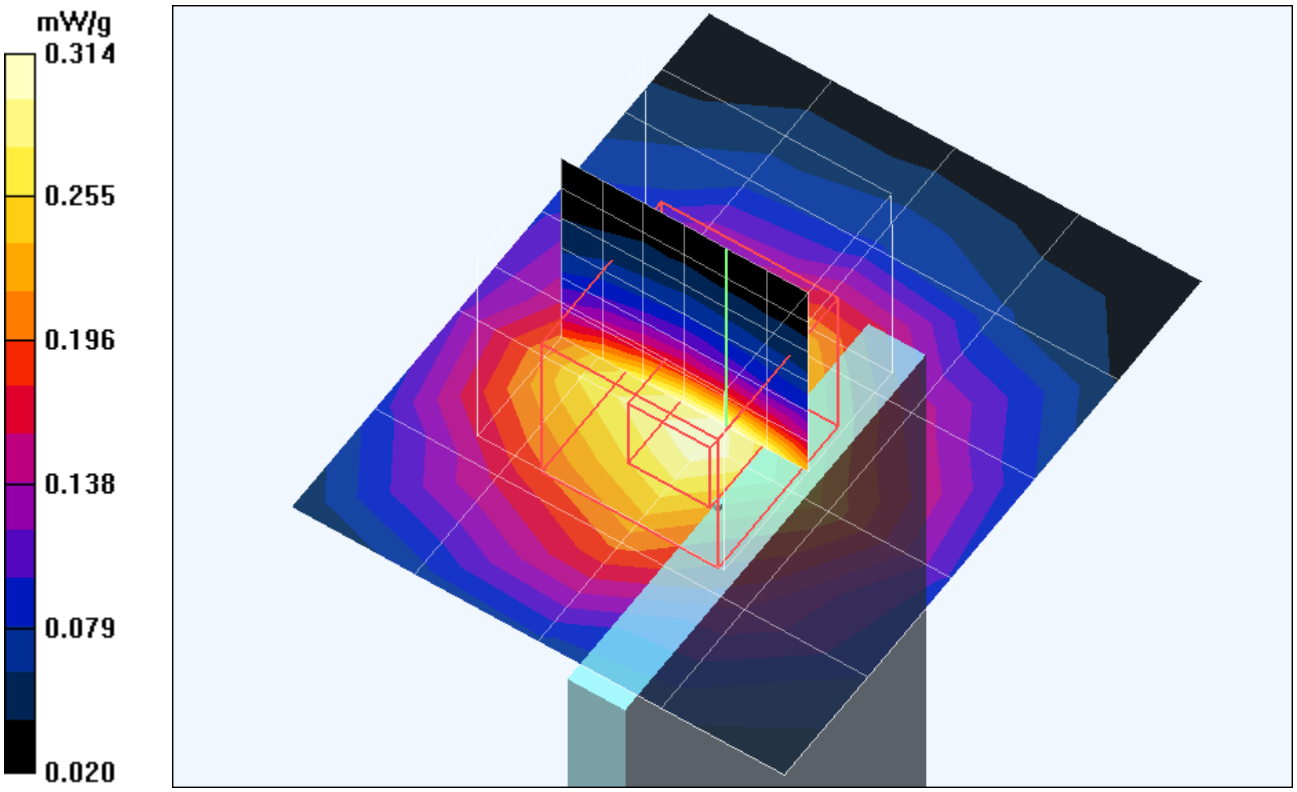

Date/Time: 10/18/04 17:18:04

Test Laboratory: Advance Data Technology

WPC-3007 11g Tip Dell D600 Mode 8 Ch 11

DUT: Atheros 802.11b/g Card Bus Adapter ; Type: WPC-3007 ; Test Channel Frequency: 2462 MHz

Communication System: 802.11g ; Frequency: 2462 MHz; Duty Cycle: 1:1; Modulation type: OFDM
Medium: MSL2450 Medium parameters used: f = 2462 MHz; σ = 1.99 mho/m; ε_r = 52.9; ρ = 1000 kg/m^3 ; Liquid level : 155 mm
Phantom section: Flat Section ; Separation distance : 15 mm (The tip of the EUT to the Phantom)
Antenna type : Internal Antenna ; Air temp. : 22.0 degrees ; Liquid temp. : 21.0 degrees
DASY4 Configuration:
- Probe: ET3DV6 - SN1687 ; ConvF(4.23, 4.23, 4.23) ; Calibrated: 2004/8/26
- Sensor-Surface: 4mm (Mechanical Surface Detection)
- Electronics: DAE3 Sn510; Calibrated: 2004/8/17
- Phantom: SAM 12; Type: SAM V4.0; Serial: TP 1202
- Measurement SW: DASY4, V4.3 Build 22; Postprocessing SW: SEMCAD, V1.8 Build 127

High Channel/Area Scan (5x6x1): Measurement grid: dx=15mm, dy=15mm
Maximum value of SAR (measured) = 0.081 mW/g

High Channel/Zoon Scan (7x7x7)/Cube 0: Measurement grid: dx=5mm, dy=5mm, dz=5mm
Reference Value = 6.27 V/m; Power Drift = -0.2 dB
Peak SAR (extrapolated) = 0.124 W/kg
SAR(1 g) = 0.072 mW/g; SAR(10 g) = 0.043 mW/g
Maximum value of SAR (measured) = 0.078 mW/g

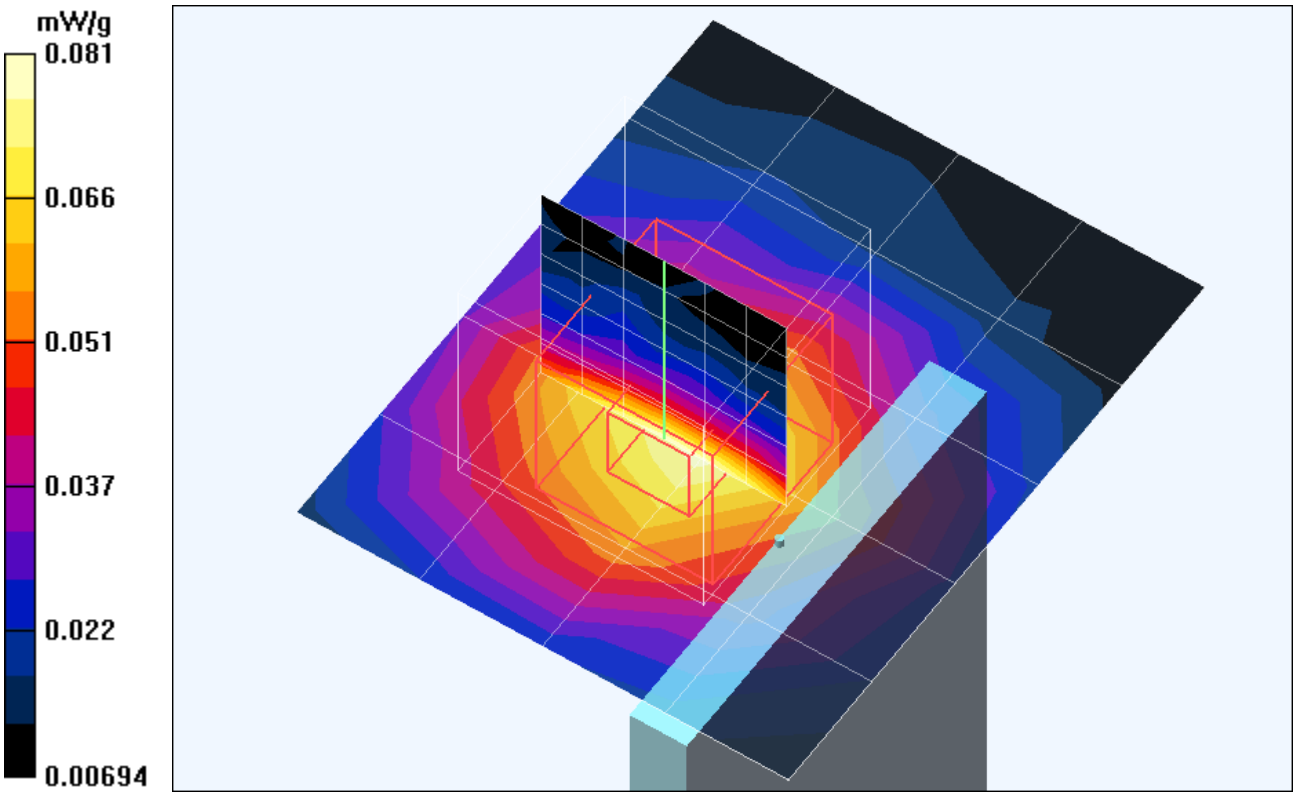

Date/Time: 10/18/04 10:33:55

Test Laboratory: Advance Data Technology

WPC-3007 11b Bottom Dell C600 Mode 9 Ch 1

DUT: Atheros 802.11b/g Card Bus Adapter ; Type: WPC-3007 ; Test Channel Frequency: 2412 MHz

Communication System: 802.11b ; Frequency: 2412 MHz ; Duty Cycle: 1:1 ; Modulation type: CCK
Medium: MSL2450 Medium parameters used: f = 2412 MHz; σ = 1.93 mho/m; ε_r = 52.9; ρ = 1000 kg/m^3 ; Liquid level : 155mm
Phantom section: Flat Section ; Separation distance : 10 mm (The bottom side of the EUT to the Phantom)
Antenna type : Internal Antenna ; Air temp. : 22.0 degrees ; Liquid temp. : 21.0 degrees
DASY4 Configuration:
- Probe: ET3DV6 - SN1687 ; ConvF(4.23, 4.23, 4.23) ; Calibrated: 2004/8/26
- Sensor-Surface: 4mm (Mechanical Surface Detection)
- Electronics: DAE3 Sn510 ; Calibrated: 2004/8/17
- Phantom: SAM 12 ; Type: SAM V4.0 ; Serial: TP 1202
- Measurement SW: DASY4, V4.3 Build 22 ; Postprocessing SW: SEMCAD, V1.8 Build 127

Low Channel/Area Scan (7x8x1): Measurement grid: dx=15mm, dy=15mm
Maximum value of SAR (measured) = 0.558 mW/g

Low Channel/Zoon Scan (7x7x7)/Cube 0: Measurement grid: dx=5mm, dy=5mm, dz=5mm
Reference Value = 11.5 V/m; Power Drift = -0.1 dB
Peak SAR (extrapolated) = 0.942 W/kg
SAR(1 g) = 0.514 mW/g; SAR(10 g) = 0.284 mW/g
Maximum value of SAR (measured) = 0.565 mW/g

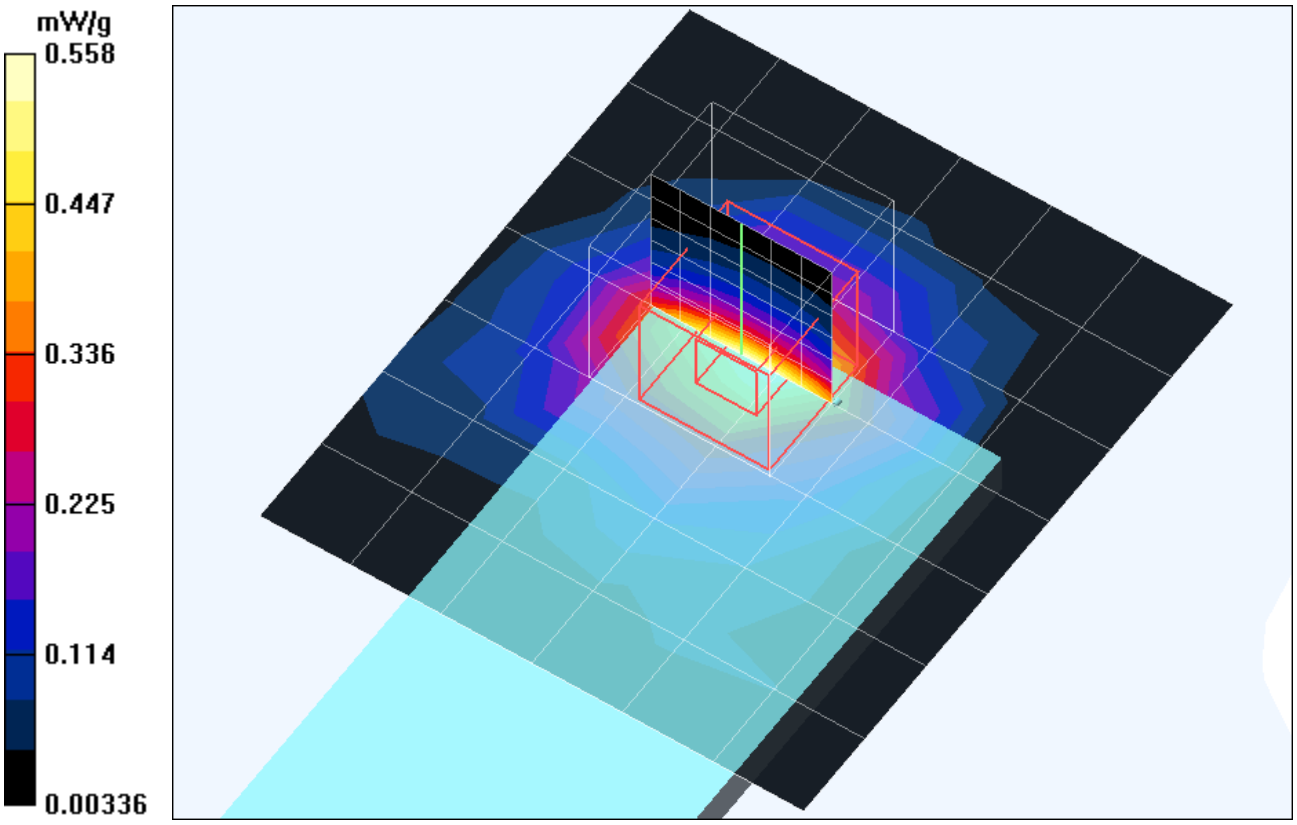

Date/Time: 10/18/04 09:57:39

Test Laboratory: Advance Data Technology

WPC-3007 11b Bottom Dell C600 Mode 9 Ch 6

DUT: Atheros 802.11b/g Card Bus Adapter ; Type: WPC-3007 ; Test Channel Frequency: 2437 MHz

Communication System: 802.11b ; Frequency: 2437 MHz ; Duty Cycle: 1:1 ; Modulation type: CCK
Medium: MSL2450 Medium parameters used: f = 2437 MHz; σ = 1.97 mho/m; ε_r = 52.9; ρ = 1000 kg/m^3 ; Liquid level : 155mm
Phantom section: Flat Section ; Separation distance : 10 mm (The bottom side of the EUT to the Phantom)
Antenna type : Internal Antenna ; Air temp. : 22.0 degrees ; Liquid temp. : 21.0 degrees
DASY4 Configuration:
- Probe: ET3DV6 - SN1687 ; ConvF(4.23, 4.23, 4.23) ; Calibrated: 2004/8/26
- Sensor-Surface: 4mm (Mechanical Surface Detection)
- Electronics: DAE3 Sn510 ; Calibrated: 2004/8/17
- Phantom: SAM 12 ; Type: SAM V4.0 ; Serial: TP 1202
- Measurement SW: DASY4, V4.3 Build 22 ; Postprocessing SW: SEMCAD, V1.8 Build 127

Middle Channel/Area Scan (7x8x1): Measurement grid: dx=15mm, dy=15mm
Maximum value of SAR (measured) = 1.17 mW/g

Middle Channel/Zoon Scan (7x7x7)/Cube 0: Measurement grid: dx=5mm, dy=5mm, dz=5mm
Reference Value = 16.2 V/m; Power Drift = 0.1 dB
Peak SAR (extrapolated) = 1.95 W/kg
SAR(1 g) = 1.07 mW/g; SAR(10 g) = 0.590 mW/g
Maximum value of SAR (measured) = 1.17 mW/g

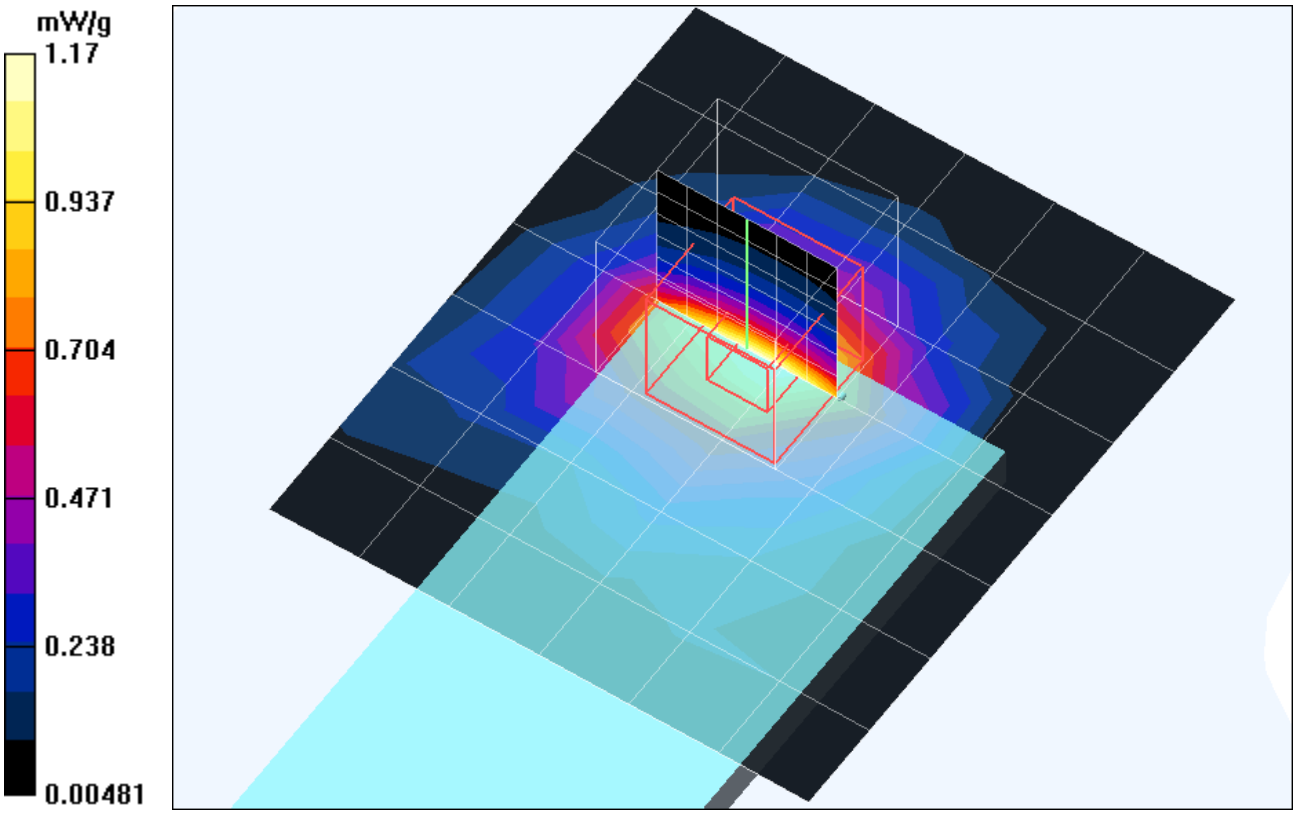

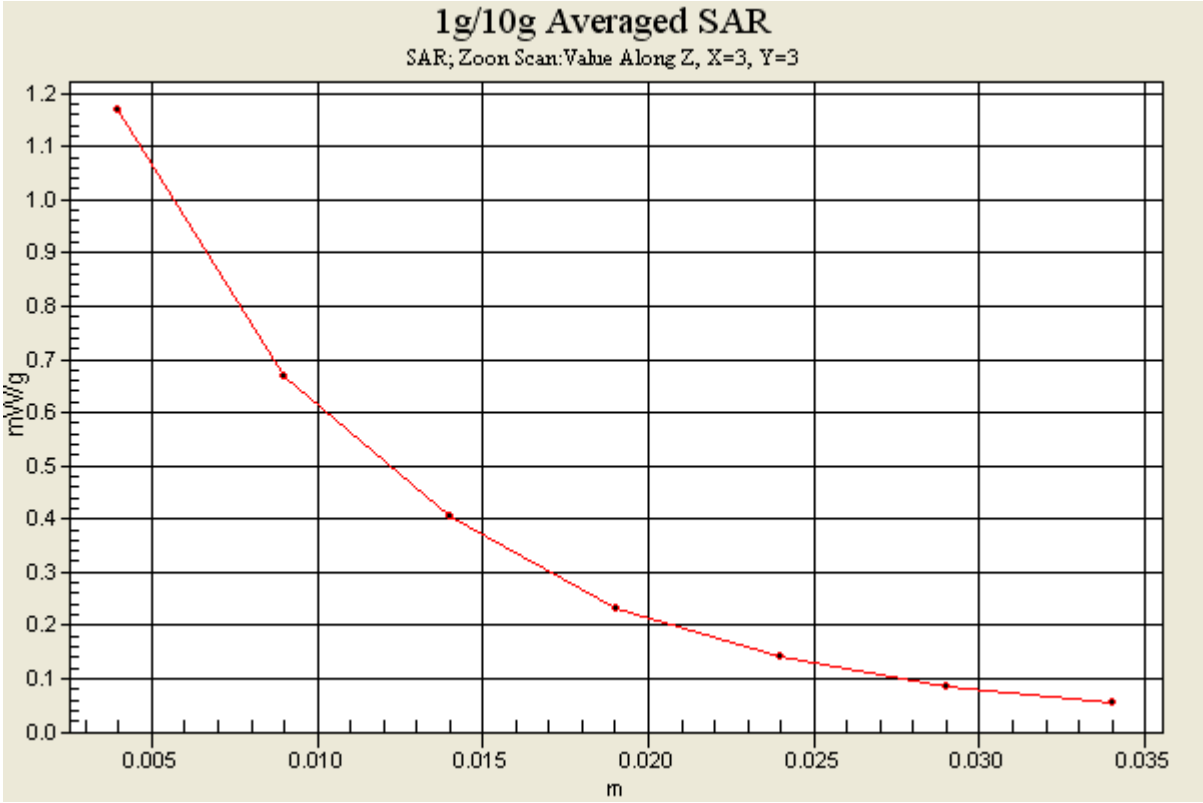
1g/10g Averaged SAR
SAR; Zoon Scan:Value Along Z, X=3, Y=3
mW/g
1.2
1.1
1.0
0.9
0.8
0.7
0.6
0.5
0.4
0.3
0.2
0.1
0.0
0.005
0.010
0.015
0.020
0.025
0.030
0.035
m

Date/Time: 10/18/04 10:52:12

Test Laboratory: Advance Data Technology

WPC-3007 11b Bottom Dell C600 Mode 9 Ch 11

DUT: Atheros 802.11b/g Card Bus Adapter ; Type: WPC-3007 ; Test Channel Frequency: 2462 MHz

Communication System: 802.11b ; Frequency: 2462 MHz ; Duty Cycle: 1:1 ; Modulation type: CCK
Medium: MSL2450 Medium parameters used: f = 2462 MHz; σ = 1.99 mho/m; ε_r = 52.9; ρ = 1000 kg/m^3 ; Liquid level : 155mm
Phantom section: Flat Section ; Separation distance : 10 mm (The bottom side of the EUT to the Phantom)
Antenna type : Internal Antenna ; Air temp. : 22.0 degrees ; Liquid temp. : 21.0 degrees
DASY4 Configuration:
- Probe: ET3DV6 - SN1687 ; ConvF(4.23, 4.23, 4.23) ; Calibrated: 2004/8/26
- Sensor-Surface: 4mm (Mechanical Surface Detection)
- Electronics: DAE3 Sn510 ; Calibrated: 2004/8/17
- Phantom: SAM 12 ; Type: SAM V4.0 ; Serial: TP 1202
- Measurement SW: DASY4, V4.3 Build 22 ; Postprocessing SW: SEMCAD, V1.8 Build 127

High Channel/Area Scan (7x8x1): Measurement grid: dx=15mm, dy=15mm
Maximum value of SAR (measured) = 0.380 mW/g

High Channel/Zoon Scan (7x7x7)/Cube 0: Measurement grid: dx=5mm, dy=5mm, dz=5mm
Reference Value = 9.4 V/m; Power Drift = -0.2 dB
Peak SAR (extrapolated) = 0.625 W/kg
SAR(1 g) = 0.339 mW/g; SAR(10 g) = 0.188 mW/g
Maximum value of SAR (measured) = 0.364 mW/g

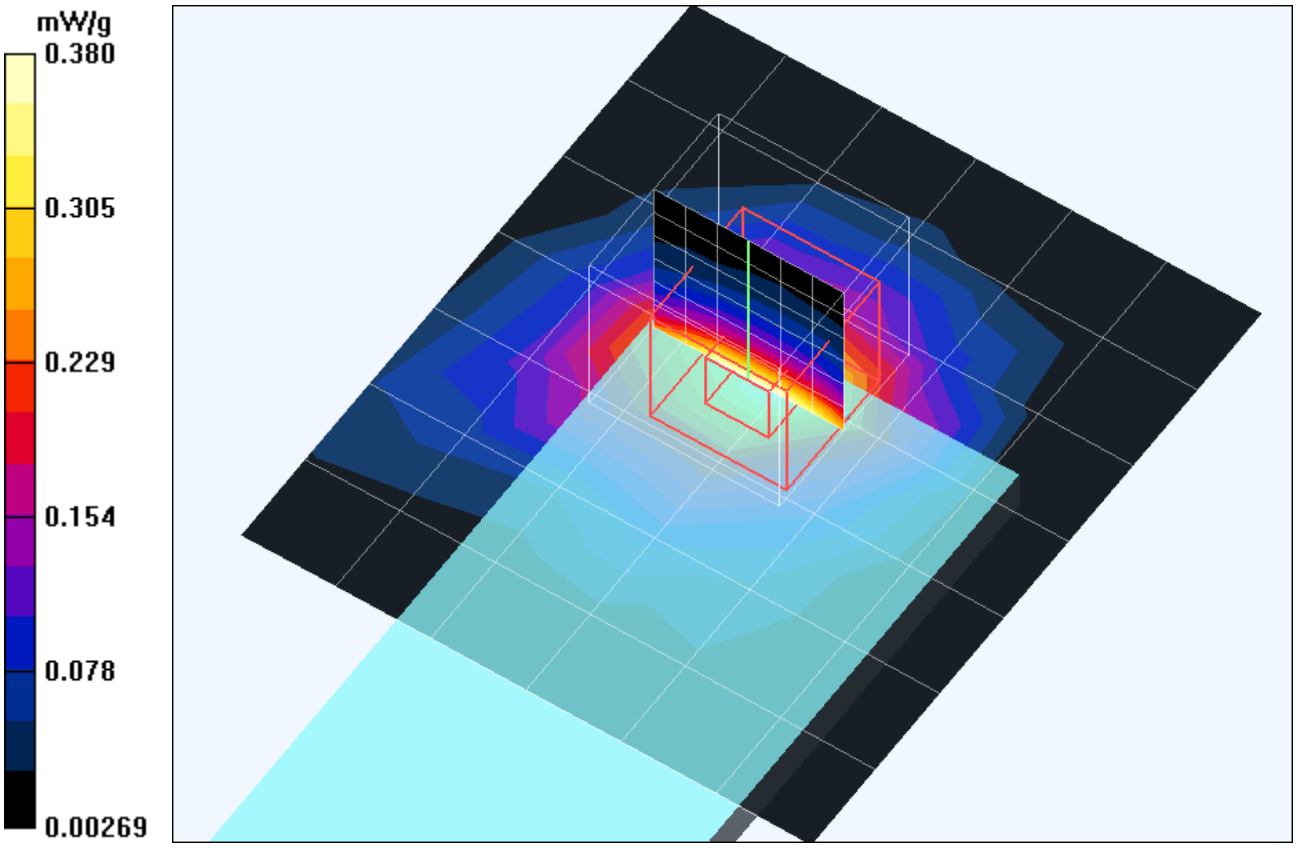

Date/Time: 10/18/04 12:18:40

Test Laboratory: Advance Data Technology

WPC-3007 11b Tip Dell C600 Mode 10 Ch 1

DUT: Atheros 802.11b/g Card Bus Adapter ; Type: WPC-3007 ; Test Channel Frequency: 2412 MHz

Communication System: 802.11b ; Frequency: 2412 MHz; Duty Cycle: 1:1; Modulation type: CCK
Medium: MSL2450 Medium parameters used: f = 2412 MHz; σ = 1.93 mho/m; ε_r = 52.9; ρ = 1000 kg/m^3 ; Liquid level : 155 mm
Phantom section: Flat Section ; Separation distance : 15 mm (The tip of the EUT to the Phantom)
Antenna type : Internal Antenna ; Air temp. : 22.0 degrees ; Liquid temp. : 21.0 degrees
DASY4 Configuration:
- Probe: ET3DV6 - SN1687 ; ConvF(4.23, 4.23, 4.23) ; Calibrated: 2004/8/26
- Sensor-Surface: 4mm (Mechanical Surface Detection)
- Electronics: DAE3 Sn510; Calibrated: 2004/8/17
- Phantom: SAM 12; Type: SAM V4.0; Serial: TP 1202
- Measurement SW: DASY4, V4.3 Build 22; Postprocessing SW: SEMCAD, V1.8 Build 127

Low Channel/Area Scan (5x6x1): Measurement grid: dx=15mm, dy=15mm
Maximum value of SAR (measured) = 0.141 mW/g

Low Channel/Zoon Scan (7x7x7)/Cube 0: Measurement grid: dx=5mm, dy=5mm, dz=5mm
Reference Value = 8.92 V/m; Power Drift = -0.2 dB
Peak SAR (extrapolated) = 0.210 W/kg
SAR(1 g) = 0.125 mW/g; SAR(10 g) = 0.073 mW/g
Maximum value of SAR (measured) = 0.134 mW/g

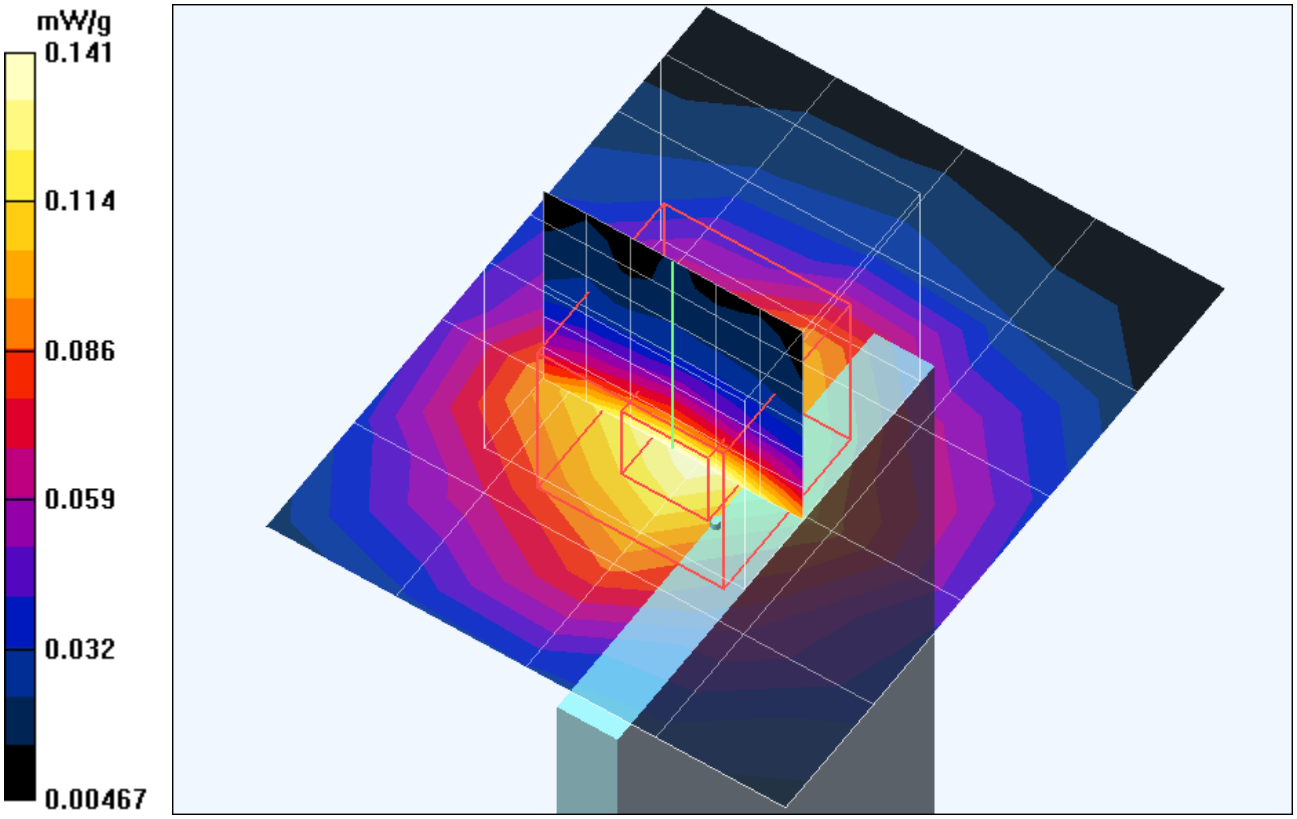

Date/Time: 10/18/04 11:59:01

Test Laboratory: Advance Data Technology

WPC-3007 11b Tip Dell C600 Mode 10 Ch 6

DUT: Atheros 802.11b/g Card Bus Adapter ; Type: WPC-3007 ; Test Channel Frequency: 2437 MHz

Communication System: 802.11b ; Frequency: 2437 MHz; Duty Cycle: 1:1; Modulation type: CCK
Medium: MSL2450 Medium parameters used: f = 2437 MHz; σ = 1.97 mho/m; ε_r = 52.9; ρ = 1000 kg/m^3 ; Liquid level : 155 mm
Phantom section: Flat Section ; Separation distance : 15 mm (The tip of the EUT to the Phantom)
Antenna type : Internal Antenna ; Air temp. : 22.0 degrees ; Liquid temp. : 21.0 degrees
DASY4 Configuration:
- Probe: ET3DV6 - SN1687 ; ConvF(4.23, 4.23, 4.23) ; Calibrated: 2004/8/26
- Sensor-Surface: 4mm (Mechanical Surface Detection)
- Electronics: DAE3 Sn510; Calibrated: 2004/8/17
- Phantom: SAM 12; Type: SAM V4.0; Serial: TP 1202
- Measurement SW: DASY4, V4.3 Build 22; Postprocessing SW: SEMCAD, V1.8 Build 127

Middle Channel/Area Scan (5x6x1): Measurement grid: dx=15mm, dy=15mm
Maximum value of SAR (measured) = 0.341 mW/g

Middle Channel/Zoon Scan (7x7x7)/Cube 0: Measurement grid: dx=5mm, dy=5mm, dz=5mm
Reference Value = 13.2 V/m; Power Drift = -0.1 dB
Peak SAR (extrapolated) = 0.529 W/kg
SAR(1 g) = 0.316 mW/g; SAR(10 g) = 0.185 mW/g
Maximum value of SAR (measured) = 0.342 mW/g

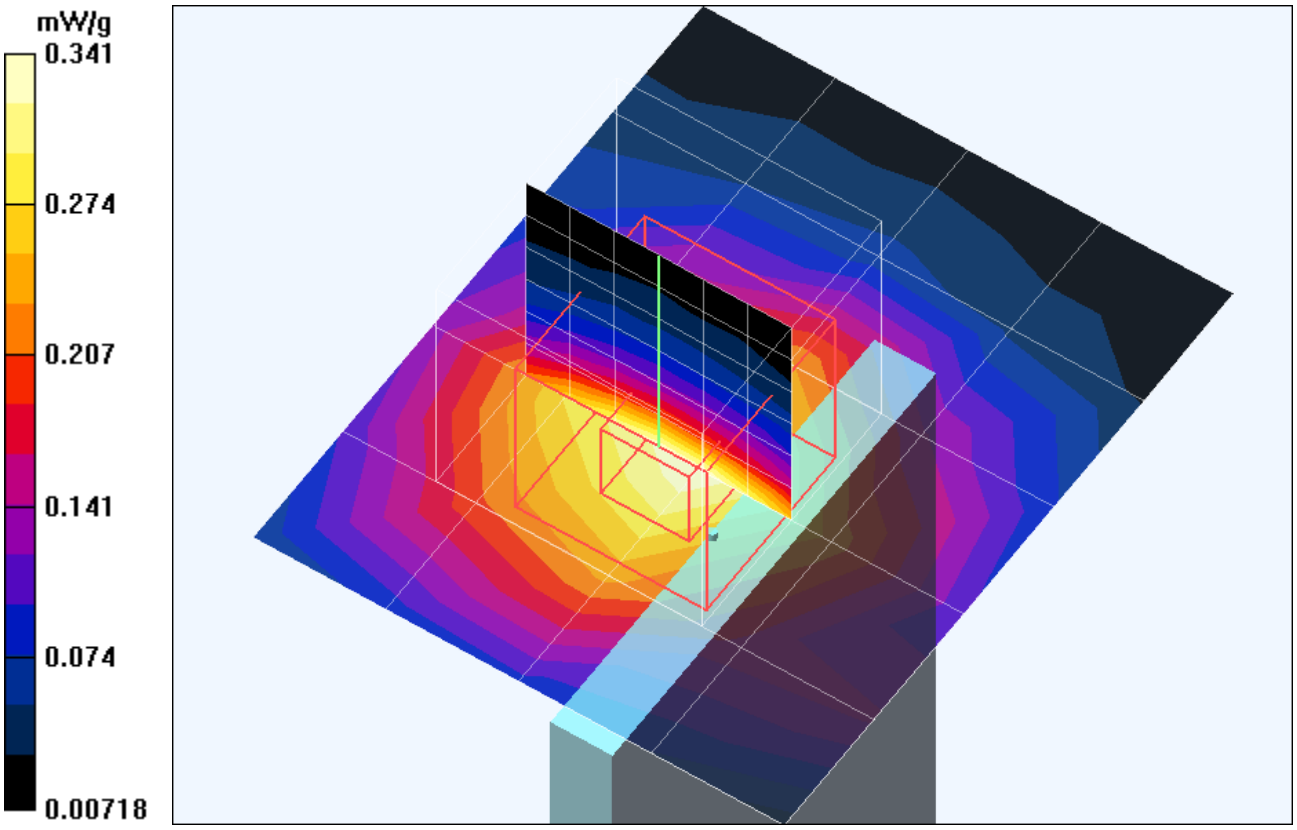

Date/Time: 10/18/04 12:35:36

Test Laboratory: Advance Data Technology

WPC-3007 11b Tip Dell C600 Mode 10 Ch 11

DUT: Atheros 802.11b/g Card Bus Adapter ; Type: WPC-3007 ; Test Channel Frequency: 2462 MHz

Communication System: 802.11b ; Frequency: 2462 MHz; Duty Cycle: 1:1; Modulation type: CCK
Medium: MSL2450 Medium parameters used: f = 2462 MHz; σ = 1.99 mho/m; ε_r = 52.9; ρ = 1000 kg/m^3 ; Liquid level : 155 mm
Phantom section: Flat Section ; Separation distance : 15 mm (The tip of the EUT to the Phantom)
Antenna type : Internal Antenna ; Air temp. : 22.0 degrees ; Liquid temp. : 21.0 degrees
DASY4 Configuration:
- Probe: ET3DV6 - SN1687 ; ConvF(4.23, 4.23, 4.23) ; Calibrated: 2004/8/26
- Sensor-Surface: 4mm (Mechanical Surface Detection)
- Electronics: DAE3 Sn510; Calibrated: 2004/8/17
- Phantom: SAM 12; Type: SAM V4.0; Serial: TP 1202
- Measurement SW: DASY4, V4.3 Build 22; Postprocessing SW: SEMCAD, V1.8 Build 127

High Channel/Area Scan (5x6x1): Measurement grid: dx=15mm, dy=15mm
Maximum value of SAR (measured) = 0.119 mW/g

High Channel/Zoon Scan (7x7x7)/Cube 0: Measurement grid: dx=5mm, dy=5mm, dz=5mm
Reference Value = 7.48 V/m; Power Drift = -0.2 dB
Peak SAR (extrapolated) = 0.195 W/kg
SAR(1 g) = 0.110 mW/g; SAR(10 g) = 0.064 mW/g
Maximum value of SAR (measured) = 0.118 mW/g

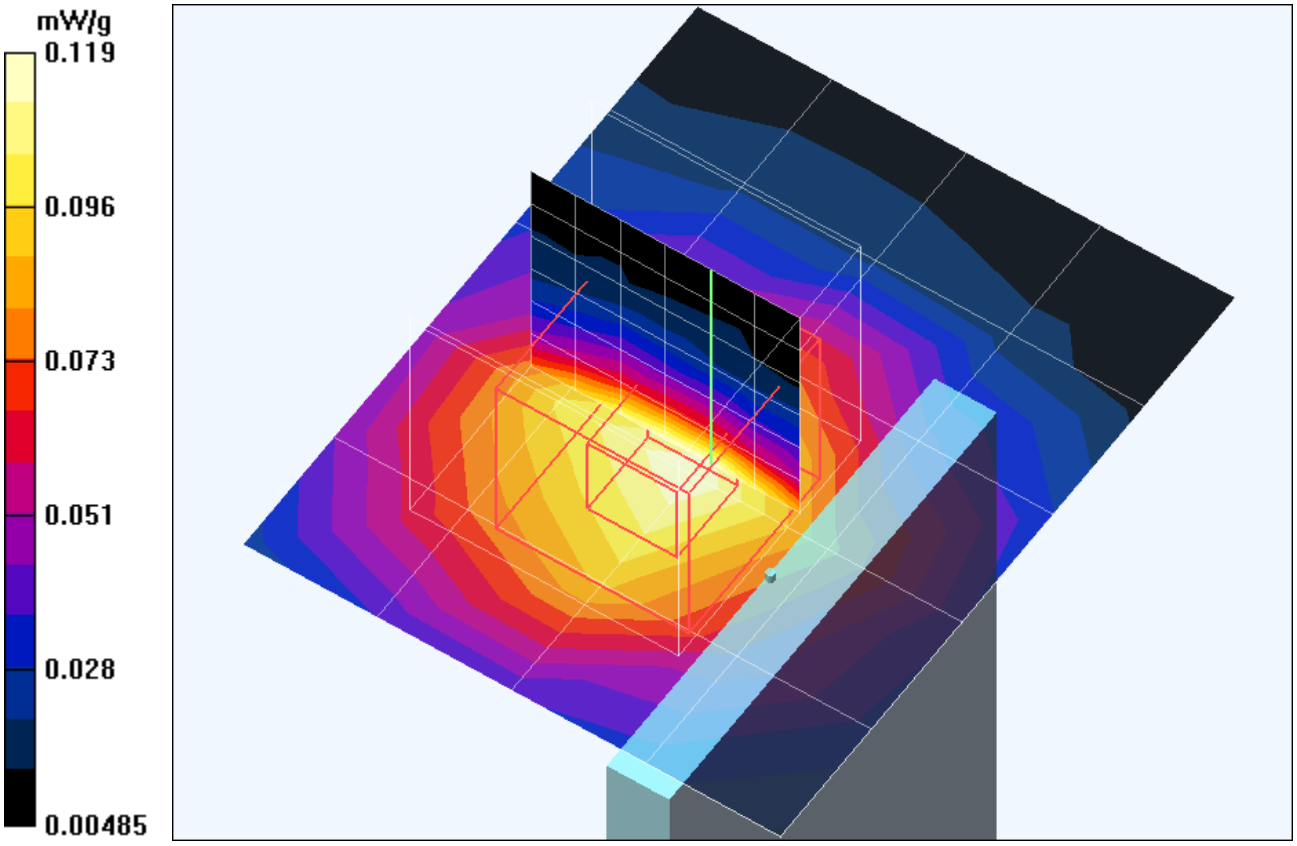

Date/Time: 10/18/04 11:10:11

Test Laboratory: Advance Data Technology

WPC-3007 11g Bottom Dell C600 Mode 11 Ch 1

DUT: Atheros 802.11b/g Card Bus Adapter ; Type: WPC-3007 ; Test Channel Frequency: 2412 MHz

Communication System: 802.11g ; Frequency: 2412 MHz ; Duty Cycle: 1:1 ; Modulation type: OFDM
Medium: MSL2450 Medium parameters used: f = 2412 MHz; σ = 1.93 mho/m; ε_r = 52.9; ρ = 1000 kg/m^3 ; Liquid level : 155mm
Phantom section: Flat Section ; Separation distance : 10 mm (The bottom side of the EUT to the Phantom)
Antenna type : Internal Antenna ; Air temp. : 22.0 degrees ; Liquid temp. : 21.0 degrees
DASY4 Configuration:
- Probe: ET3DV6 - SN1687 ; ConvF(4.23, 4.23, 4.23) ; Calibrated: 2004/8/26
- Sensor-Surface: 4mm (Mechanical Surface Detection)
- Electronics: DAE3 Sn510 ; Calibrated: 2004/8/17
- Phantom: SAM 12 ; Type: SAM V4.0 ; Serial: TP 1202
- Measurement SW: DASY4, V4.3 Build 22 ; Postprocessing SW: SEMCAD, V1.8 Build 127

Low Channel/Area Scan (7x8x1): Measurement grid: dx=15mm, dy=15mm
Maximum value of SAR (measured) = 0.342 mW/g

Low Channel/Zoon Scan (7x7x7)/Cube 0: Measurement grid: dx=5mm, dy=5mm, dz=5mm
Reference Value = 9.24 V/m; Power Drift = -0.2 dB
Peak SAR (extrapolated) = 0.539 W/kg
SAR(1 g) = 0.311 mW/g; SAR(10 g) = 0.174 mW/g
Maximum value of SAR (measured) = 0.339 mW/g

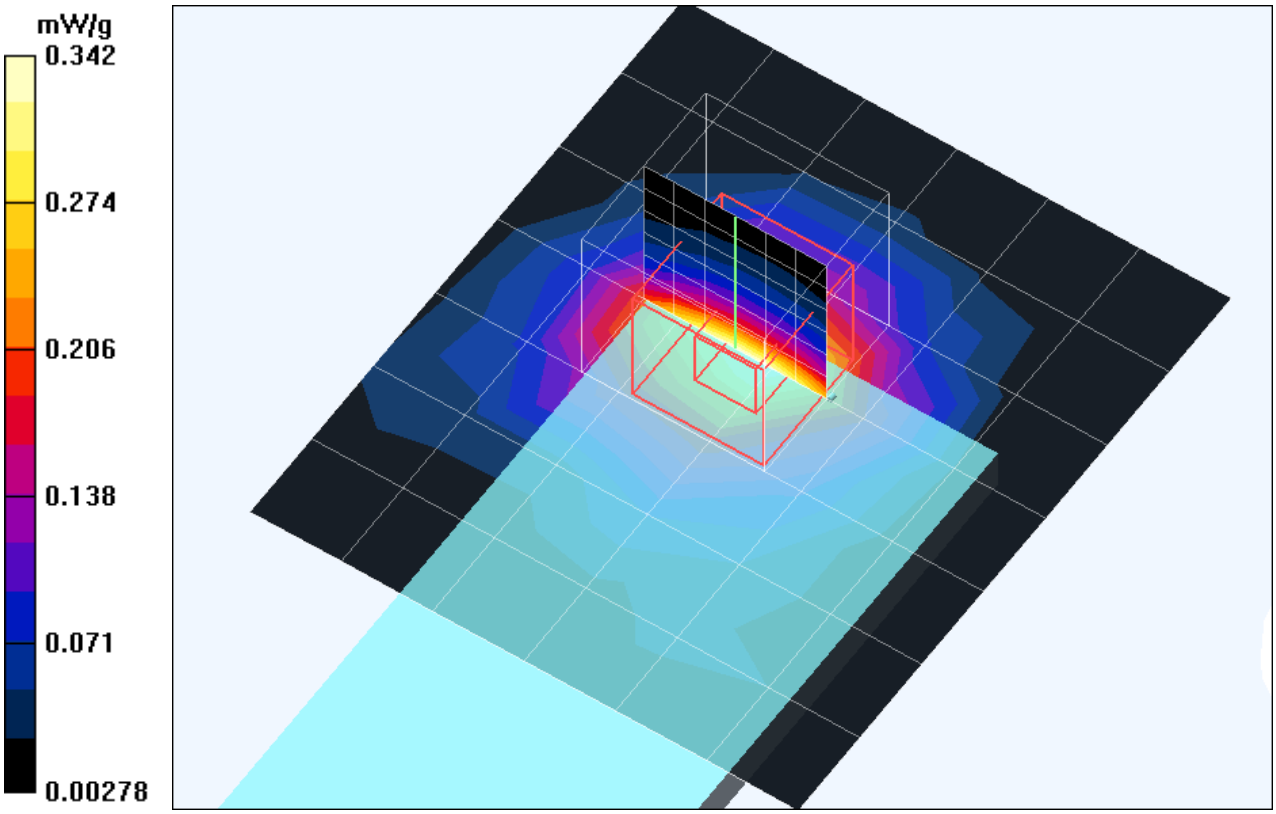

Date/Time: 10/18/04 10:16:01

Test Laboratory: Advance Data Technology

WPC-3007 11g Bottom Dell C600 Mode 11 Ch 6

DUT: Atheros 802.11b/g Card Bus Adapter ; Type: WPC-3007 ; Test Channel Frequency: 2437 MHz

Communication System: 802.11g ; Frequency: 2437 MHz ; Duty Cycle: 1:1 ; Modulation type: OFDM
Medium: MSL2450 Medium parameters used: f = 2437 MHz; σ = 1.97 mho/m; ε_r = 52.9; ρ = 1000 kg/m^3 ; Liquid level : 155mm
Phantom section: Flat Section ; Separation distance : 10 mm (The bottom side of the EUT to the Phantom)
Antenna type : Internal Antenna ; Air temp. : 22.0 degrees ; Liquid temp. : 21.0 degrees
DASY4 Configuration:
- Probe: ET3DV6 - SN1687 ; ConvF(4.23, 4.23, 4.23) ; Calibrated: 2004/8/26
- Sensor-Surface: 4mm (Mechanical Surface Detection)
- Electronics: DAE3 Sn510 ; Calibrated: 2004/8/17
- Phantom: SAM 12 ; Type: SAM V4.0 ; Serial: TP 1202
- Measurement SW: DASY4, V4.3 Build 22 ; Postprocessing SW: SEMCAD, V1.8 Build 127

Middle Channel/Area Scan (7x8x1): Measurement grid: dx=15mm, dy=15mm
Maximum value of SAR (measured) = 0.974 mW/g

Middle Channel/Zoon Scan (7x7x7)/Cube 0: Measurement grid: dx=5mm, dy=5mm, dz=5mm
Reference Value = 15.4 V/m; Power Drift = -0.2 dB
Peak SAR (extrapolated) = 1.6 W/kg
SAR(1 g) = 0.881 mW/g; SAR(10 g) = 0.489 mW/g
Maximum value of SAR (measured) = 0.964 mW/g

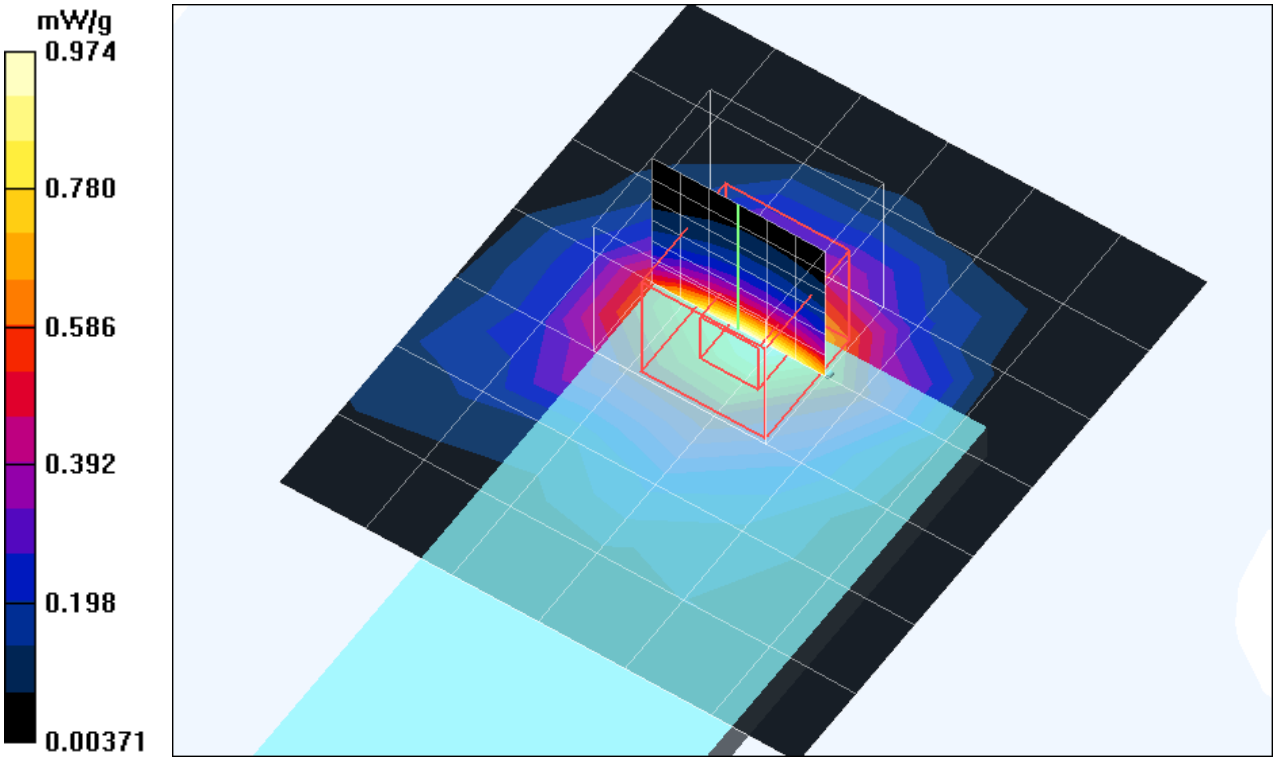

Date/Time: 10/18/04 11:27:42

Test Laboratory: Advance Data Technology

WPC-3007 11g Bottom Dell C600 Mode 11 Ch 11

DUT: Atheros 802.11b/g Card Bus Adapter ; Type: WPC-3007 ; Test Channel Frequency: 2462 MHz

Communication System: 802.11g ; Frequency: 2462 MHz ; Duty Cycle: 1:1 ; Modulation type: OFDM
Medium: MSL2450 Medium parameters used: f = 2462 MHz; σ = 1.99 mho/m; ε_r = 52.9; ρ = 1000 kg/m^3 ; Liquid level : 155mm
Phantom section: Flat Section ; Separation distance : 10 mm (The bottom side of the EUT to the Phantom)
Antenna type : Internal Antenna ; Air temp. : 22.0 degrees ; Liquid temp. : 21.0 degrees
DASY4 Configuration:
- Probe: ET3DV6 - SN1687 ; ConvF(4.23, 4.23, 4.23) ; Calibrated: 2004/8/26
- Sensor-Surface: 4mm (Mechanical Surface Detection)
- Electronics: DAE3 Sn510 ; Calibrated: 2004/8/17
- Phantom: SAM 12 ; Type: SAM V4.0 ; Serial: TP 1202
- Measurement SW: DASY4, V4.3 Build 22 ; Postprocessing SW: SEMCAD, V1.8 Build 127

High Channel/Area Scan (7x8x1): Measurement grid: dx=15mm, dy=15mm
Maximum value of SAR (measured) = 0.246 mW/g

High Channel/Zoon Scan (7x7x7)/Cube 0: Measurement grid: dx=5mm, dy=5mm, dz=5mm
Reference Value = 7.68 V/m; Power Drift = -0.2 dB
Peak SAR (extrapolated) = 0.404 W/kg
SAR(1 g) = 0.224 mW/g; SAR(10 g) = 0.125 mW/g
Maximum value of SAR (measured) = 0.244 mW/g

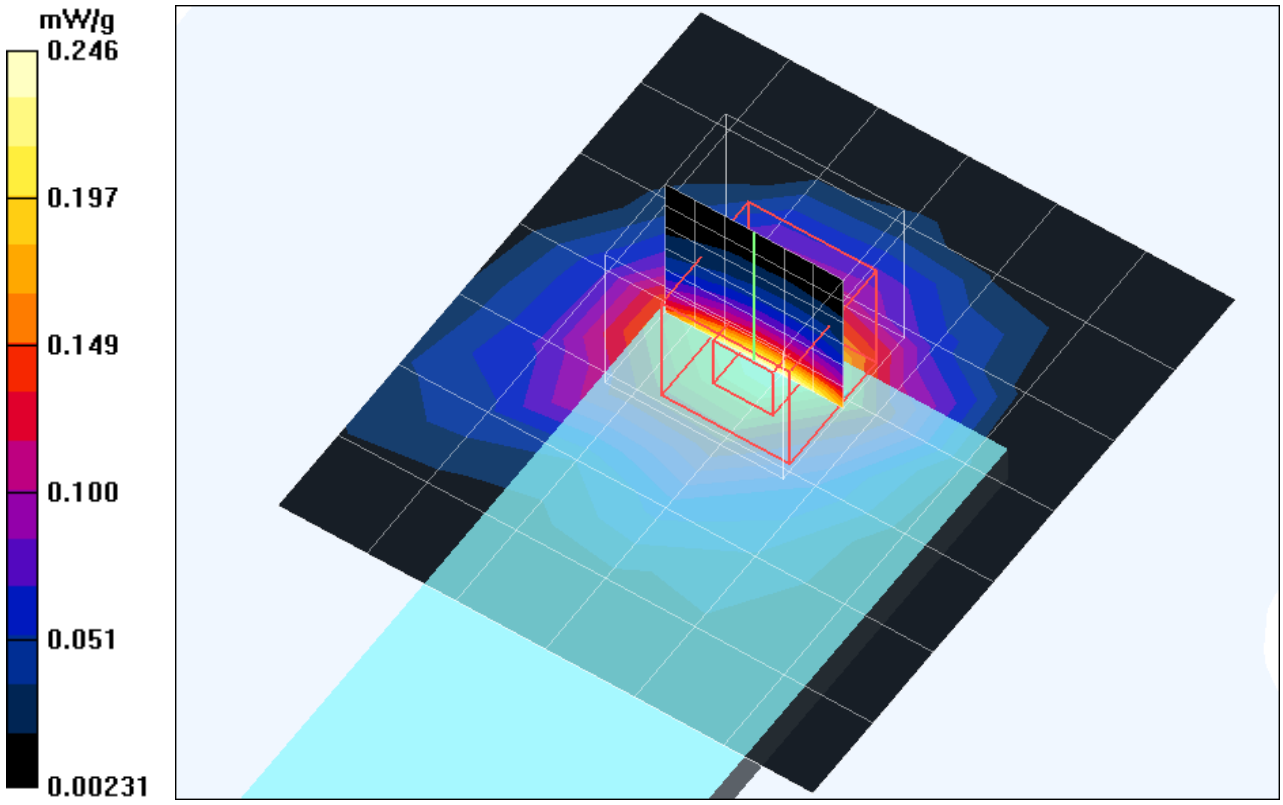

Date/Time: 10/18/04 13:08:17

Test Laboratory: Advance Data Technology

WPC-3007 11g Tip Dell C600 Mode 12 Ch 1

DUT: Atheros 802.11b/g Card Bus Adapter ; Type: WPC-3007 ; Test Channel Frequency: 2412 MHz

Communication System: 802.11g ; Frequency: 2412 MHz; Duty Cycle: 1:1; Modulation type: OFDM
Medium: MSL2450 Medium parameters used: f = 2412 MHz; σ = 1.93 mho/m; ε_r = 52.9; ρ = 1000 kg/m^3 ; Liquid level : 155 mm
Phantom section: Flat Section ; Separation distance : 15 mm (The tip of the EUT to the Phantom)
Antenna type : Internal Antenna ; Air temp. : 22.0 degrees ; Liquid temp. : 21.0 degrees
DASY4 Configuration:
- Probe: ET3DV6 - SN1687 ; ConvF(4.23, 4.23, 4.23) ; Calibrated: 2004/8/26
- Sensor-Surface: 4mm (Mechanical Surface Detection)
- Electronics: DAE3 Sn510; Calibrated: 2004/8/17
- Phantom: SAM 12; Type: SAM V4.0; Serial: TP 1202
- Measurement SW: DASY4, V4.3 Build 22; Postprocessing SW: SEMCAD, V1.8 Build 127

Low Channel/Area Scan (5x6x1): Measurement grid: dx=15mm, dy=15mm
Maximum value of SAR (measured) = 0.090 mW/g

Low Channel/Zoon Scan (7x7x7)/Cube 0: Measurement grid: dx=5mm, dy=5mm, dz=5mm
Reference Value = 6.9 V/m; Power Drift = -0.2 dB
Peak SAR (extrapolated) = 0.130 W/kg
SAR(1 g) = 0.081 mW/g; SAR(10 g) = 0.048 mW/g
Maximum value of SAR (measured) = 0.089 mW/g

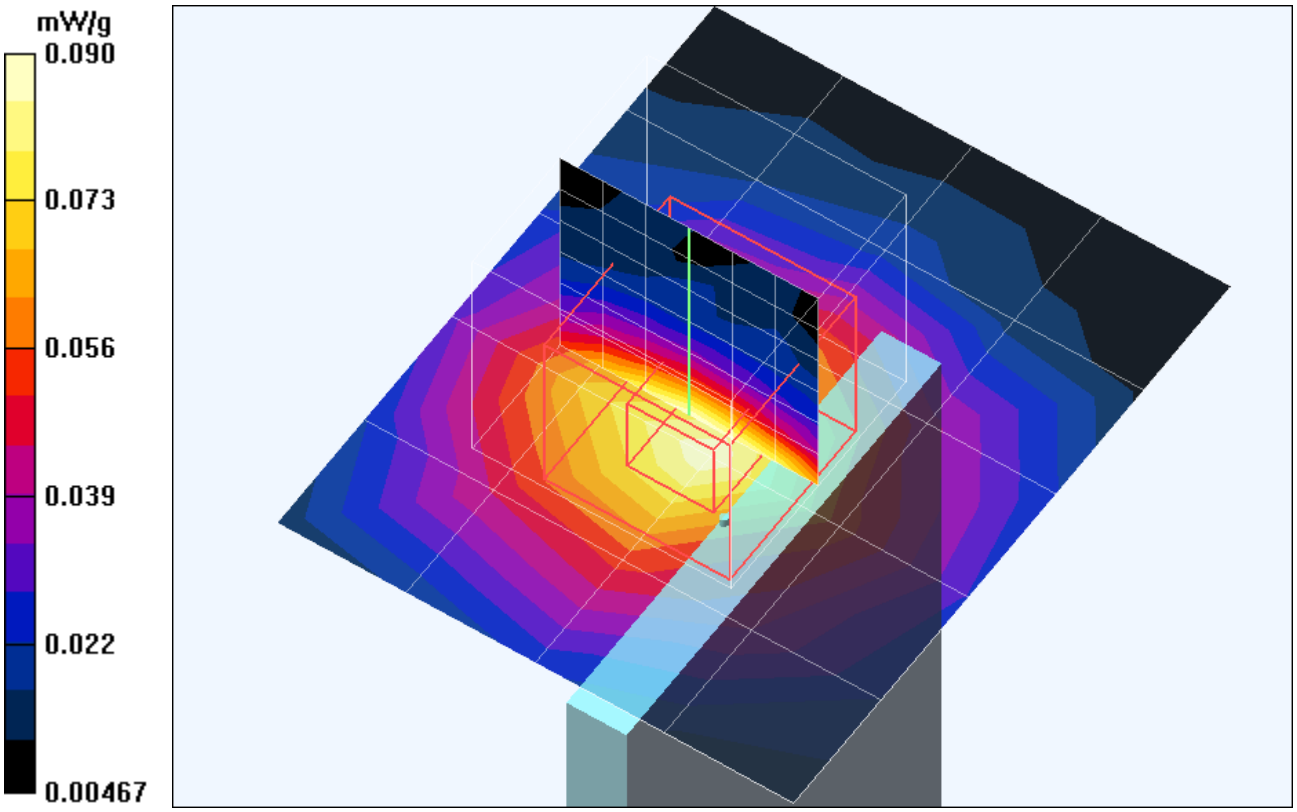

Date/Time: 10/18/04 12:53:10

Test Laboratory: Advance Data Technology

WPC-3007 11g Tip Dell C600 Mode 12 Ch 6

DUT: Atheros 802.11b/g Card Bus Adapter ; Type: WPC-3007 ; Test Channel Frequency: 2437 MHz

Communication System: 802.11g ; Frequency: 2437 MHz; Duty Cycle: 1:1; Modulation type: OFDM
Medium: MSL2450 Medium parameters used: f = 2437 MHz; σ = 1.97 mho/m; ε_r = 52.9; ρ = 1000 kg/m^3 ; Liquid level : 155 mm
Phantom section: Flat Section ; Separation distance : 15 mm (The tip of the EUT to the Phantom)
Antenna type : Internal Antenna ; Air temp. : 22.0 degrees ; Liquid temp. : 21.0 degrees
DASY4 Configuration:
- Probe: ET3DV6 - SN1687 ; ConvF(4.23, 4.23, 4.23) ; Calibrated: 2004/8/26
- Sensor-Surface: 4mm (Mechanical Surface Detection)
- Electronics: DAE3 Sn510; Calibrated: 2004/8/17
- Phantom: SAM 12; Type: SAM V4.0; Serial: TP 1202
- Measurement SW: DASY4, V4.3 Build 22; Postprocessing SW: SEMCAD, V1.8 Build 127

Middle Channel/Area Scan (5x6x1): Measurement grid: dx=15mm, dy=15mm
Maximum value of SAR (measured) = 0.277 mW/g

Middle Channel/Zoon Scan (7x7x7)/Cube 0: Measurement grid: dx=5mm, dy=5mm, dz=5mm
Reference Value = 11.7 V/m; Power Drift = -0.2 dB
Peak SAR (extrapolated) = 0.406 W/kg
SAR(1 g) = 0.245 mW/g; SAR(10 g) = 0.145 mW/g
Maximum value of SAR (measured) = 0.267 mW/g

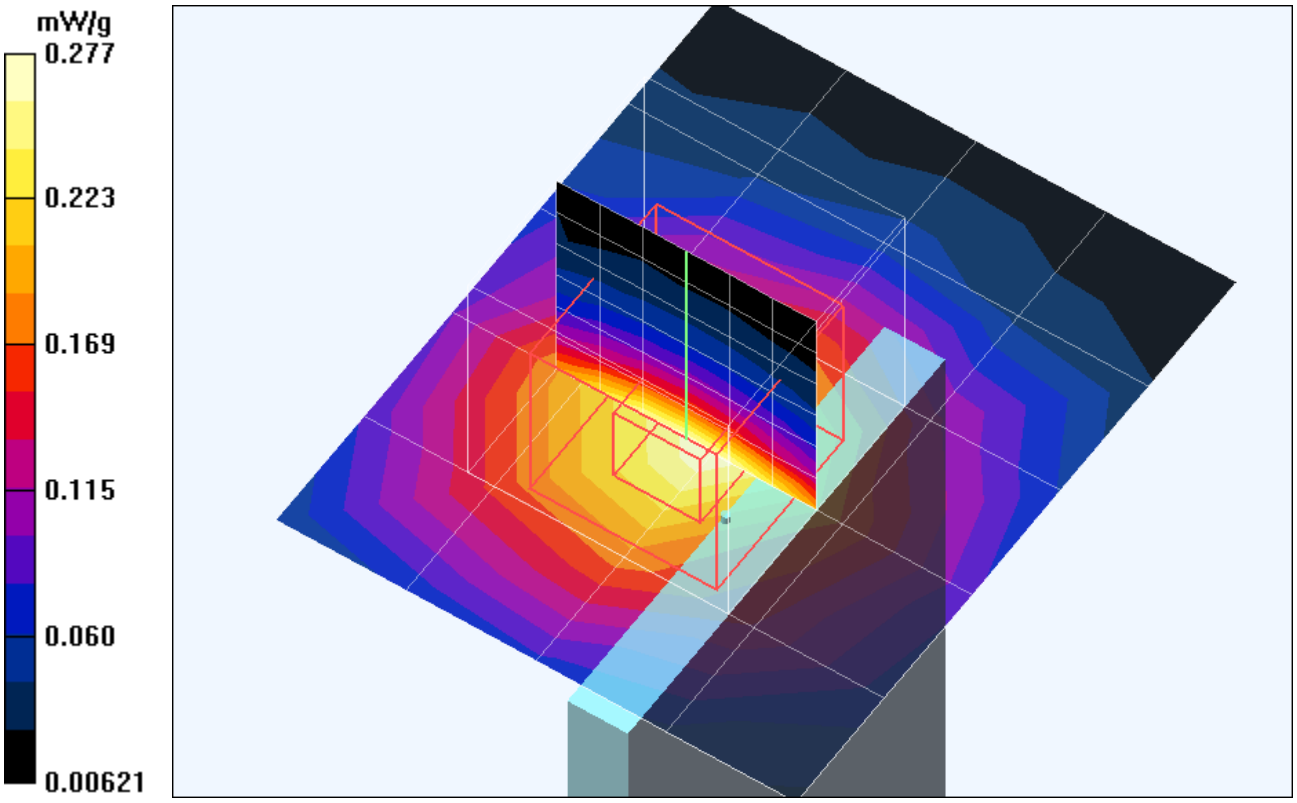

Date/Time: 10/18/04 13:25:33

Test Laboratory: Advance Data Technology

WPC-3007 11g Tip Dell C600 Mode 12 Ch 11

DUT: Atheros 802.11b/g Card Bus Adapter ; Type: WPC-3007 ; Test Channel Frequency: 2462 MHz

Communication System: 802.11g ; Frequency: 2462 MHz; Duty Cycle: 1:1; Modulation type: OFDM
Medium: MSL2450 Medium parameters used: f = 2462 MHz; σ = 1.99 mho/m; ε_r = 52.9; ρ = 1000 kg/m^3 ; Liquid level : 155 mm
Phantom section: Flat Section ; Separation distance : 15 mm (The tip of the EUT to the Phantom)
Antenna type : Internal Antenna ; Air temp. : 22.0 degrees ; Liquid temp. : 21.0 degrees
DASY4 Configuration:
- Probe: ET3DV6 - SN1687 ; ConvF(4.23, 4.23, 4.23) ; Calibrated: 2004/8/26
- Sensor-Surface: 4mm (Mechanical Surface Detection)
- Electronics: DAE3 Sn510; Calibrated: 2004/8/17
- Phantom: SAM 12; Type: SAM V4.0; Serial: TP 1202
- Measurement SW: DASY4, V4.3 Build 22; Postprocessing SW: SEMCAD, V1.8 Build 127

High Channel/Area Scan (5x6x1): Measurement grid: dx=15mm, dy=15mm
Maximum value of SAR (measured) = 0.074 mW/g

High Channel/Zoon Scan (7x7x7)/Cube 0: Measurement grid: dx=5mm, dy=5mm, dz=5mm
Reference Value = 6.09 V/m; Power Drift = -0.2 dB
Peak SAR (extrapolated) = 0.117 W/kg
SAR(1 g) = 0.070 mW/g; SAR(10 g) = 0.042 mW/g
Maximum value of SAR (measured) = 0.076 mW/g

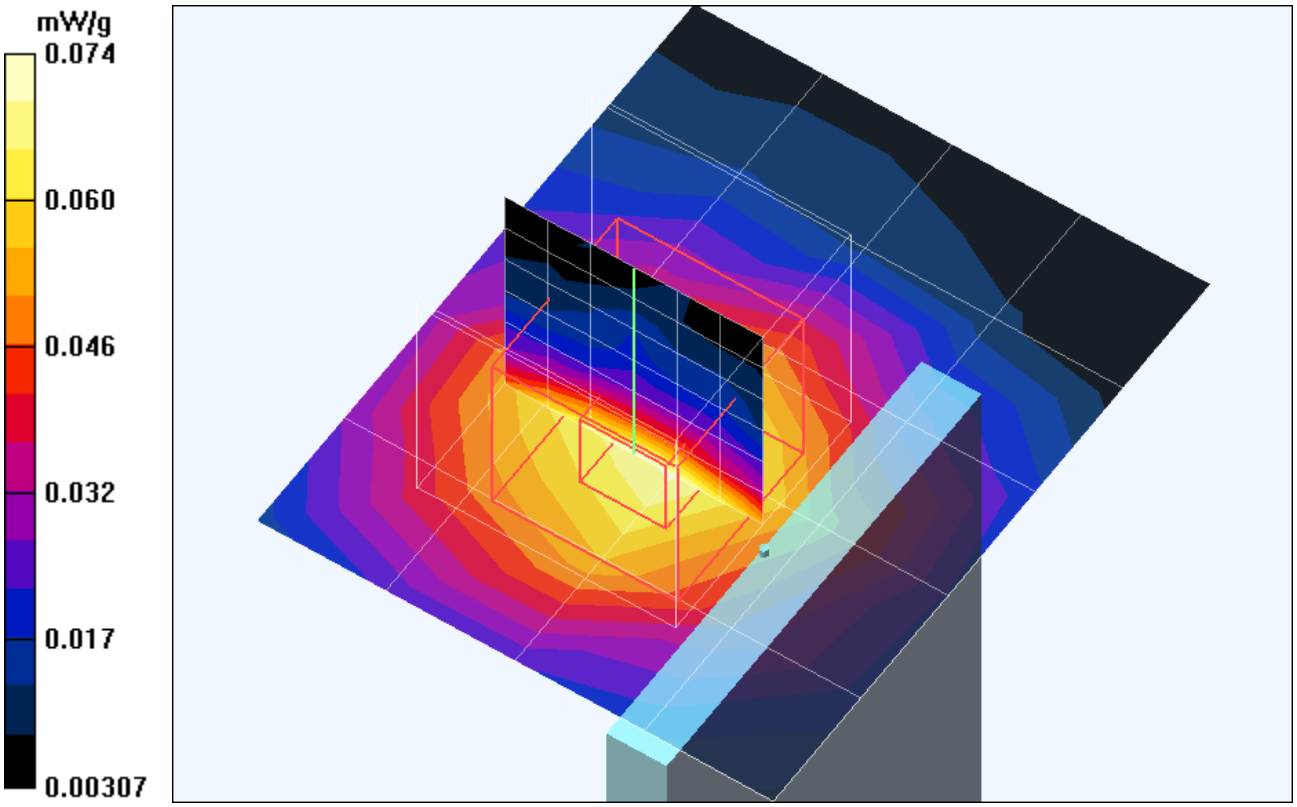

A3 : SYSTEM VALIDATION

Date/Time: 10/18/04 09:13:09

Test Laboratory: Advance Data Technology

System Validation Check-MSL 2450MHz

DUT: Dipole 2450 MHz ; Type: D2450V2 ; Test Channel Frequency: 2450 MHz

Communication System: CW ; Frequency: 2450 MHz; Duty Cycle: 1:1; Modulation type: CW
Medium: MSL2450;Medium parameters used: f = 2450 MHz; σ = 1.98 mho/m; ε_r = 52.9; ρ = 1000 kg/m^3 ; Liquid level : 155mm
Phantom section: Flat Section ; Separation distance : 10 mm (The feetpoint of the dipole to the Phantom)Air temp. : 22.0 degrees ; Liquid temp. : 21.0 degrees
DASY4 Configuration:
- Probe: ET3DV6 - SN1687 ; ConvF(4.23, 4.23, 4.23) ; Calibrated: 2004/8/26
- Sensor-Surface: 4mm (Mechanical Surface Detection)
- Electronics: DAE3 Sn510; Calibrated: 2004/8/17
- Phantom: SAM 12; Type: SAM V4.0; Serial: TP 1202
- Measurement SW: DASY4, V4.3 Build 22; Postprocessing SW: SEMCAD, V1.8 Build 127

d=10mm, Pin=250mW/Area Scan (5x6x1): Measurement grid: dx=15mm, dy=15mm
Maximum value of SAR (measured) = 11.4 mW/g

d=10mm, Pin=250mW/Zoom Scan (7x7x7) (7x7x7)/Cube 0: Measurement grid: dx=5mm, dy=5mm, dz=5mm
Reference Value = 83.3 V/m; Power Drift = 0.1 dB
Peak SAR (extrapolated) = 21.7 W/kg
SAR(1 g) = 11.5 mW/g; SAR(10 g) = 5.57 mW/g
Maximum value of SAR (measured) = 13.3 mW/g

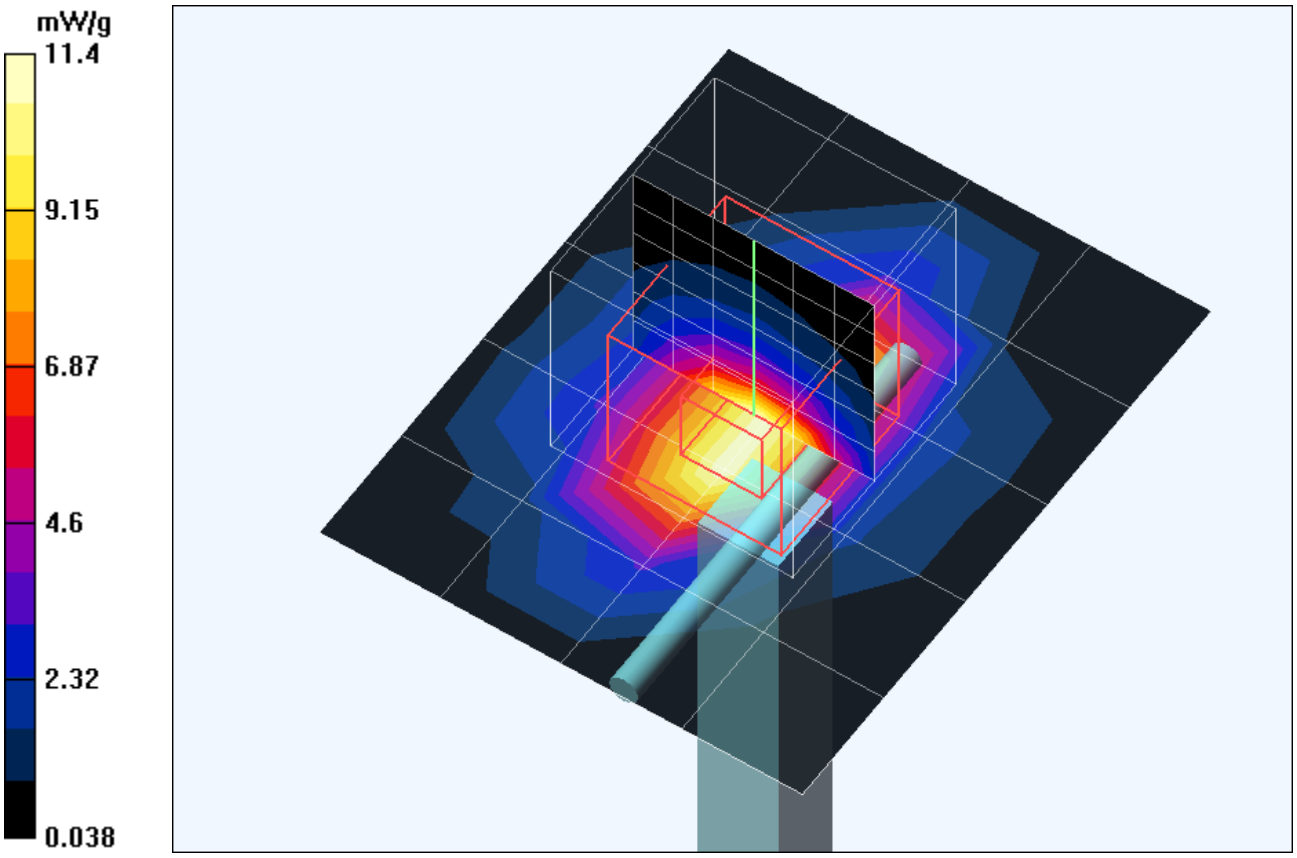

APPENDIX B : ADT SAR MEASUREMENT SYSTEM

APPENDIX C: PHOTOGRAPHS OF SYSTEM VALIDATION

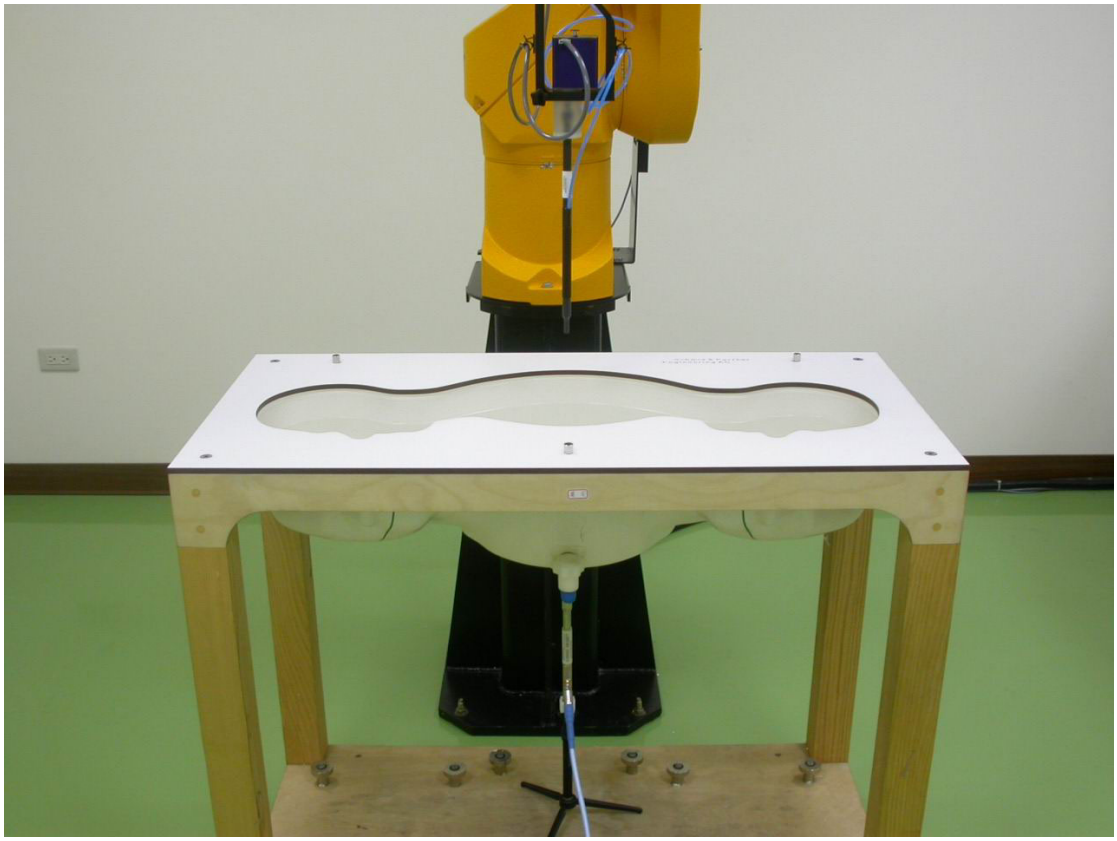

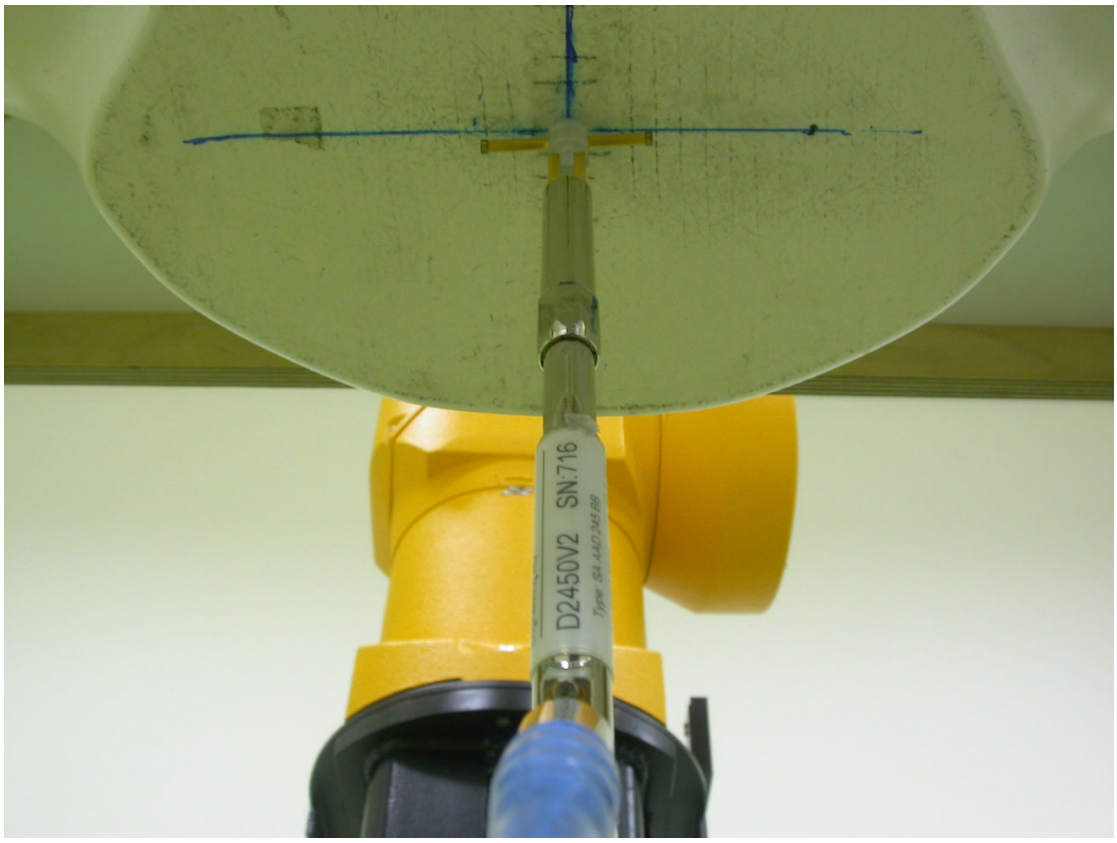

APPENDIX D: SYSTEM CERTIFICATE & CALIBRATION

D1: SAM PHANTOM

Schmid & Partner Engineering AG

Zeughausstrasse 43, 8004 Zurich, Switzerland, Phone +41 1 245 97 00, Fax +41 1 245 97 79

Certificate of conformity / First Article Inspection

Item	SAM Twin Phantom V4.0
Type No	QD 000 P40 CA
Series No	TP-1150 and higher
Manufacturer / Origin	Untersee Composites Hauptstr. 69 CH-8559 Fruthwilen Switzerland

Tests

The series production process used allows the limitation to test of first articles.
Complete tests were made on the pre-series Type No. QD 000 P40 AA, Serial No. TP-1001 and on the series first article Type No. QD 000 P40 BA, Serial No. TP-1006. Certain parameters have been retested using further series units (called samples).

Test	Requirement	Details	Units tested
Shape	Compliance with the geometry according to the CAD model.	IT'IS CAD File (*)	First article, Samples
Material thickness	Compliant with the requirements according to the standards	2mm +/- 0.2mm in specific areas	First article, Samples
Material parameters	Dielectric parameters for required frequencies	200 MHz – 3 GHz Relative permittivity < 5 Loss tangent < 0.05.	Material sample TP 104-5
Material resistivity	The material has been tested to be compatible with the liquids defined in the standards	Liquid type HSL 1800 and others according to the standard.	Pre-series, First article

Standards

[1] CENELEC EN 50361
[2] IEEE P1528-200x draft 6.5
[3] IEC PT 62209 draft 0.9
(*) The IT'IS CAD file is derived from [2] and is also within the tolerance requirements of the shapes of [1] and [3].

Conformity

Based on the sample tests above, we certify that this item is in compliance with the uncertainty requirements of SAR measurements specified in standard [1] and draft standards [2] and [3].

Date 28.02.2002

Signature / Stamp

F. Bomholt

Schmid & Partner Engineering AG
Zeughausstrasse 43, CH-8004 Zurich
Tel. +41 1 245 97 00, Fax +41 1 245 97 79

Voleaire Katja

D2: DOSIMETRIC E-FIELD PROBE

Schmid & Partner Engineering AG

s p e a g

Zeughausstrasse 43, 8004 Zurich, Switzerland
Phone +41 1 245 9700, Fax +41 1 245 9779
info@speag.com, http://www.speag.com

IMPORTANT NOTICE

USAGE OF PROBES IN ORGANIC SOLVENTS

Diethylene Gycol Monobuthy Ether (the basis for liquids above 1 GHz), as many other organic solvents, is a very effective softener for synthetic materials. These solvents can cause irreparable damage to certain SPEAG products, except those which are explicitly declared as compliant with organic solvents.

Compatible Probes:
- ET3DV6
- ET3DV6R
- ES3DV2
- ER3DV6
- H3DV6

Important Note for ET3DV6 Probes:
The ET3DV6 probes shall not be exposed to solvents longer than necessary for the measurements and shall be cleaned daily after use with warm water and stored dry.

s p e a g

Schmid & Partner Engineering AG
Zeughausstrasse 43, 8004 Zurich, Switzerland
Phone +41 1 245 9700, Fax +41 1 245 9779
info@speag.com, http://www.speag.com

Schmid & Partner Engineering AG

Calibration Laboratory of
Schmid & Partner
Engineering AG
Zeughausstrasse 43, 8004 Zurich, Switzerland

Client **ADT (Auden)**

CALIBRATION CERTIFICATE

Object(s)	ET3DV6 - SN:1687
Calibration procedure(s)	QA CAL-01.v2 Calibration procedure for dosimetric E-field probes
Calibration date:	August 26, 2004
Condition of the calibrated item	In Tolerance (according to the specific calibration document)

This calibration certificate documents the traceability to national standards, which realize the physical units of measurements (SI).
The measurements and the uncertainties with confidence probability are given on the following pages and are part of the certificate.

All calibrations have been conducted in the closed laboratory facility: environment temperature 22 +/- 2 degrees Celsius and humidity < 75%.

Calibration Equipment used (M&TE critical for calibration)

Model Type	ID #	Cal Date (Calibrated by, Certificate No.)	Scheduled Calibration
Power meter EPM E4419B	GB41293874	5-May-04 (METAS, No 251-00388)	May-05
Power sensor E4412A	MY41495277	5-May-04 (METAS, No 251-00388)	May-05
Reference 20 dB Attenuator	SN: 5086 (20b)	3-May-04 (METAS, No 251-00389)	May-05
Fluke Process Calibrator Type 702	SN: 6295803	8-Sep-03 (Sintrel SCS No. E-030020)	Sep-04
Power sensor HP 8481A	MY41092180	18-Sep-02 (SPEAG, in house check Oct03)	In house check: Oct 05
RF generator HP 8684C	US3642U01700	4-Aug-99 (SPEAG, in house check Aug02)	In house check: Aug05
Network Analyzer HP 8753E	US37390585	18-Oct-01 (SPEAG, in house check Oct03)	In house check: Oct 05

	Name	Function	Signature
Calibrated by:	Nico Vetterli	Technician	N. Vetterli
Approved by:	Katja Pokovic	Laboratory Director	

Date issued: August 26, 2004

This calibration certificate is issued as an intermediate solution until the accreditation process (based on ISO/IEC 17025 International Standard) for Calibration Laboratory of Schmid & Partner Engineering AG is completed.